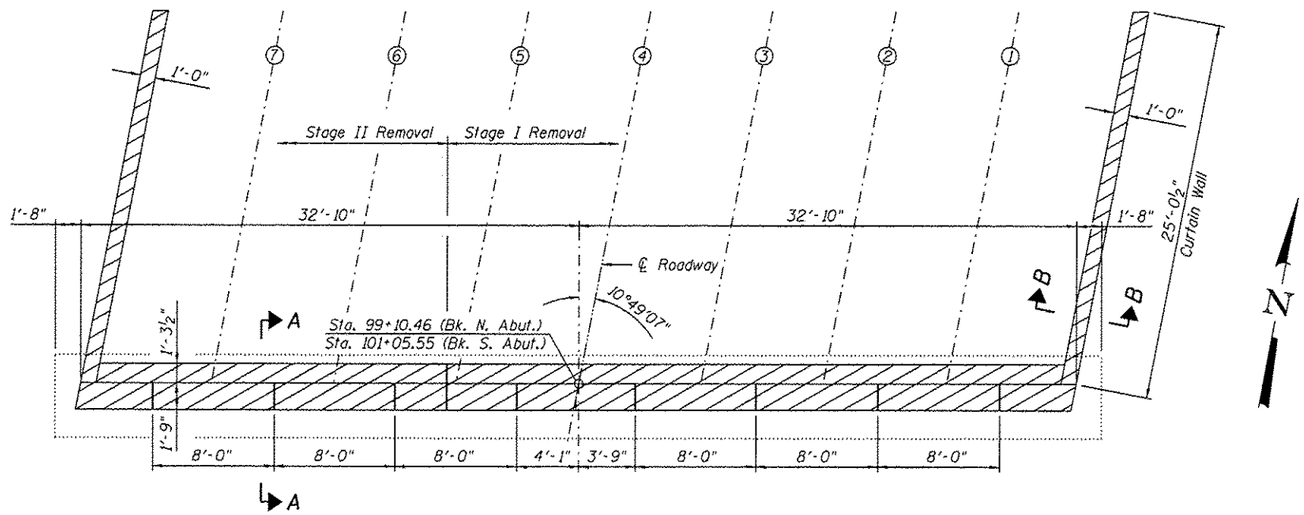

PLAN

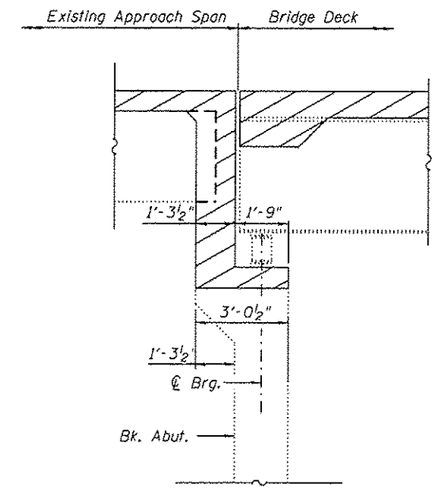

SECTION A-A

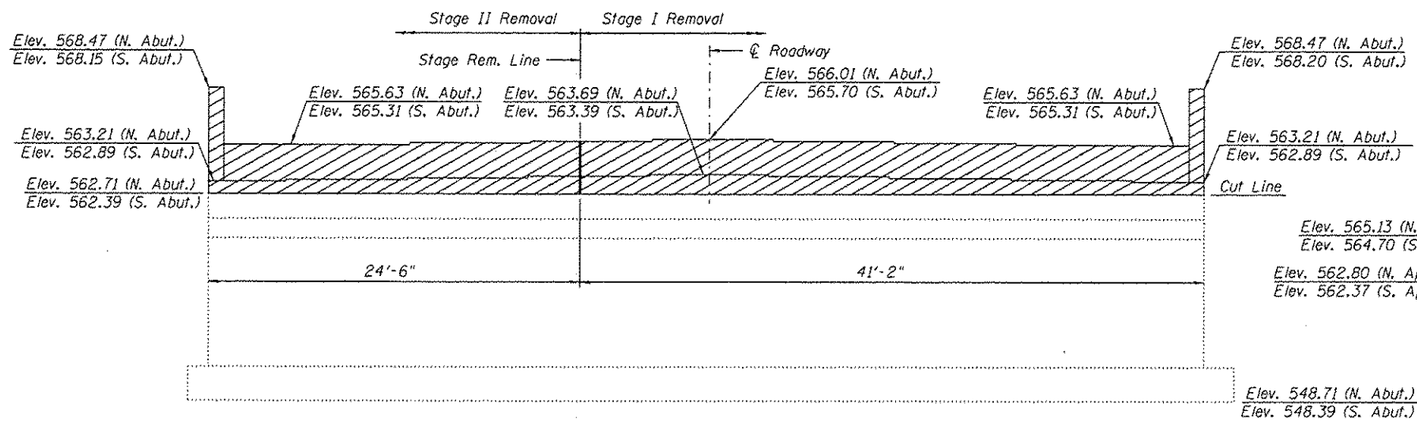

ELEVATION

(N. Abut. Shown, S. Abut. Similar)

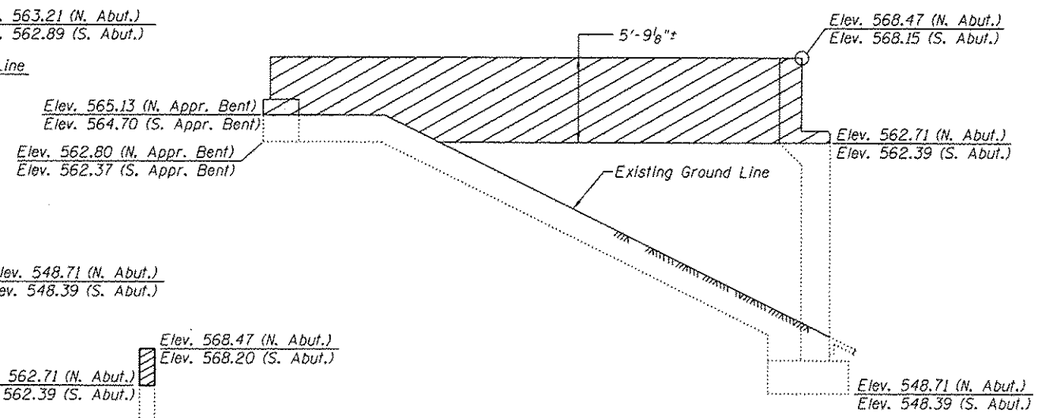

OUTSIDE ELEVATION
OF CURTAIN WALL

(Looking East)

Notes:

Hatched area indicates Concrete Removal.

Existing reinforcement bars extending into the new construction shall be cleaned, straightened and incorporated into the new construction. Cost included with Concrete Removal.

Existing reinforcement bars not extending into the new construction shall be cut off and covered with a 2" layer of cement grout. Cost included with Concrete Removal.

Elevations based off datum difference of -0.62' from existing plans

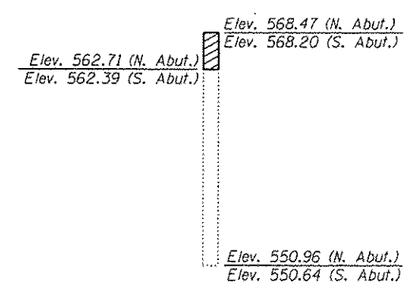

SECTION B-B

FILE NAME = CH12 over FAI-72.dgn	USER NAME =	DESIGNED - SAL	REVISED -	STATE OF ILLINOIS DEPARTMENT OF TRANSPORTATION	CONCRETE REMOVAL, ABUTMENTS MECHANICSBURG ROAD OVER F.A.I.-72 - S.N. 084-0150	F.A.I. RTE.	SECTION	COUNTY	TOTAL SHEETS / SHEET NO.
		CHECKED - MTH	REVISED -			72	*	SANGAMON	194 / 132
	PLOT SCALE =	DRAWN - TJW	REVISED -			* (84-10-1RS-3, 84-10-2RS-RIBR.)		CONTRACT NO. 72C90	
	PLOT DATE =	CHECKED - MTH	REVISED -		SHEET NO. 20 OF 27 SHEETS	FED. ROAD DIST. NO. 6	ILLINOIS	FED. AID PROJECT	