F.A. RTE.	SECTION	COUNTY	TOTAL SHEETS	SHEET NO.
*	38 RS-4	COOK	36	17
STA.		TO STA.		
FED. ROAD DIST. NO. 1	ILLINOIS	FED. AID PROJECT		

* F.A.P. 343
F.A.U. 1273

CONTRACT NO. 60814

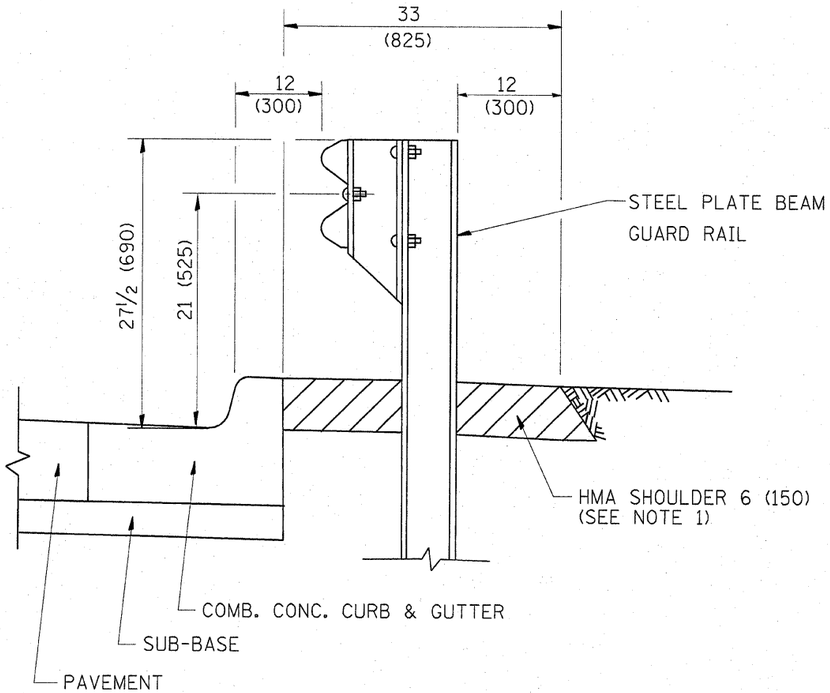

NOTES:
1. THE HMA SHOULDER SHALL EXTEND UNDER THE TRAFFIC BARRIER TERMINAL
2. GUARD RAIL MAY BE PLACED AT THE BACK OF CURB WHEN DIRECTED BY THE ENGINEER.

BASIS OF PAYMENT: HMA SHOULDER 6 (150) WILL BE PAID FOR AT THE CONTRACT UNIT PRICE PER SQUARE YARD (SQUARE METER) FOR "HOT-MIX ASPHALT SHOULDER 6" (150 mm)".

STEEL PLATE BEAM GUARD RAIL AND TRAFFIC BARRIER TERMINAL, OF THE TYPE SPECIFIED WILL BE PAID FOR SEPARATELY.

DETAILS FOR STEEL PLATE BEAM GUARD RAIL ADJACENT TO CURB AND GUTTER
[FOR ROADWAY SPEED 35 MPH (60 kmh) TO 45 MPH (70 kmh)]

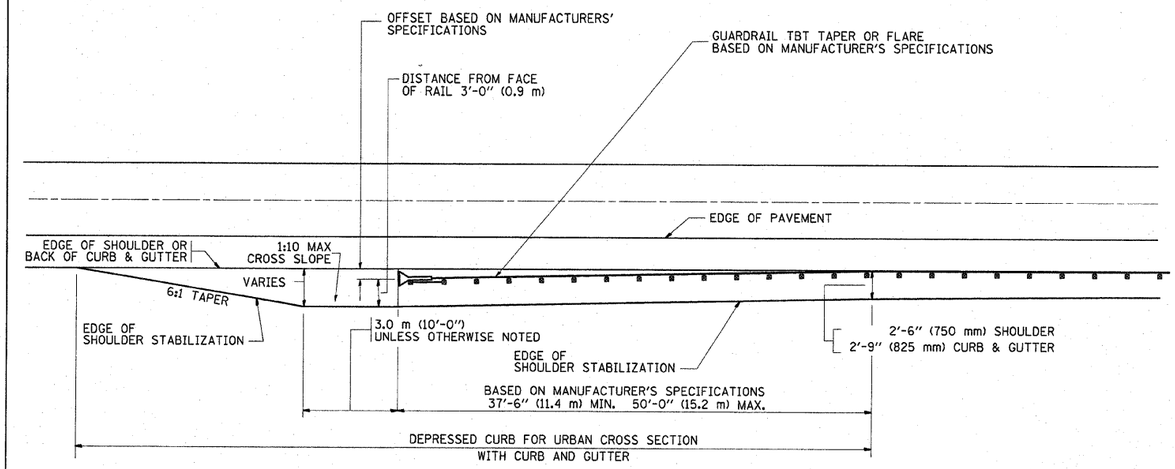

STABILIZATION AT TBT TY. 1 SPL.

TBT = TRAFFIC BARRIER TERMINAL

ALL DIMENSIONS ARE IN INCHES (MILLIMETERS) UNLESS OTHERWISE SHOWN.

REVISIONS	
NAME	DATE
M. DE YONG	09-22-90
M. DE YONG	07-14-92
R. SHAH	09/09/94
R. SHAH	10/25/94
R. SHAH	02/23/95
A. ABBAS	03/21/97
E. GOMEZ	08/28/00
R. BORO	01/01/07

ILLINOIS DEPARTMENT OF TRANSPORTATION

DETAILS FOR
STEEL PLATE BEAM GUARD RAIL
ADJACENT TO CURB AND GUTTER
STABILIZATION AT TBT TY 1 SPL.

SCALE: VERT. HORIZ. NONE
PLOT DATE: 10/10/2007
DRAWN BY Jls
CHECKED BY

BD600-10 (BD 34)
REVISION DATE: 01/01/07

PLOT DATE = 10/10/2007
FILE NAME = c:\projects\d3589\d3589ba.n32
PLOT SCALE = 52.9412 ' / IN.
USER NAME = stevepa