CONTRACT NO. 66607

EarthTech
A Tyco International Ltd. Company

F.A.P. RTE.	SECTION	COUNTY	TOTAL SHEETS	SHEET NO.
786	(109) BR	LASALLE	351	101
STA. 153+00.00		TO STA. 154+00.00		
FED. ROAD DIST. NO.	ILLINOIS	FED. AID PROJECT		

DUPONT ROAD STAGE 1 - PHASE 2

ORIGINAL SURVEY		BY	DATE
NOTE BOOK NO.	SURVEYED		
	PLOTTED		
	TEMPLATE		
	AREAS		
	AREAS CHECKED		

FINAL SURVEY		BY	DATE
NOTE BOOK NO.	SURVEYED		
	PLOTTED		
	TEMPLATE		
	AREAS		
	AREAS CHECKED		

PLOT DATE = 10/4/2007
FILE NAME = $FILEL$
PLOT SCALE = $SCALE$
USER NAME = project

CONTRACT NO. 66607

EarthTech
A Tyco International Ltd. Company

F.A.P. RTE.	SECTION	COUNTY	TOTAL SHEETS	SHEET NO.
786	(109) BR	LASALLE	351	102
STA. 64+34.45		TO STA. 65+65.91		
FED. ROAD DIST. NO.	ILLINOIS	FED. AID PROJECT		

ILLINOIS ROUTE 170 NORTH STAGE II - PHASE 1

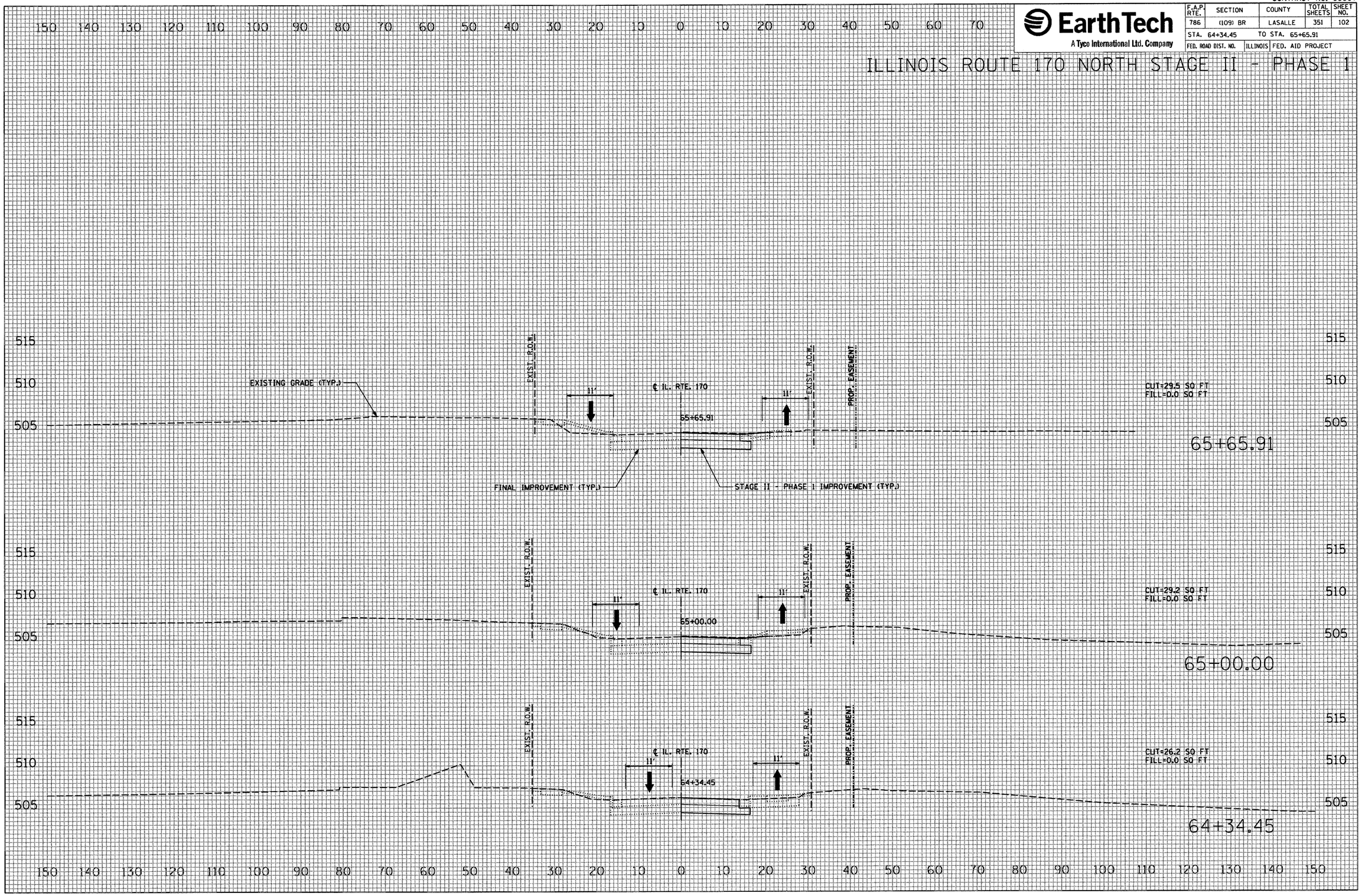

FINAL SURVEY	BY	DATE
SURVEYED		
PLOTTED		
TEMPLATE		
AREAS		
AREAS CHECKED		
NOTE BOOK NO.		

ORIGINAL SURVEY	BY	DATE
SURVEYED		
PLOTTED		
TEMPLATE		
AREAS		
AREAS CHECKED		
NOTE BOOK NO.		

PLOT DATE = 10/4/2007
FILE NAME = $FILEL$
PLOT SCALE = $SCALEL$
USER NAME = proj_mgr

CONTRACT NO. 66607

EarthTech
A Tyco International Ltd. Company

F.A.P. RTE.	SECTION	COUNTY	TOTAL SHEETS	SHEET NO.
786	(109) BR	LASALLE	351	103
STA. 88+92.51		TO STA. 89+00.00		
FED. ROAD DIST. NO.	ILLINOIS	FED. AID PROJECT		

ILLINOIS ROUTE 170 SOUTH STAGE II - PHASE 1

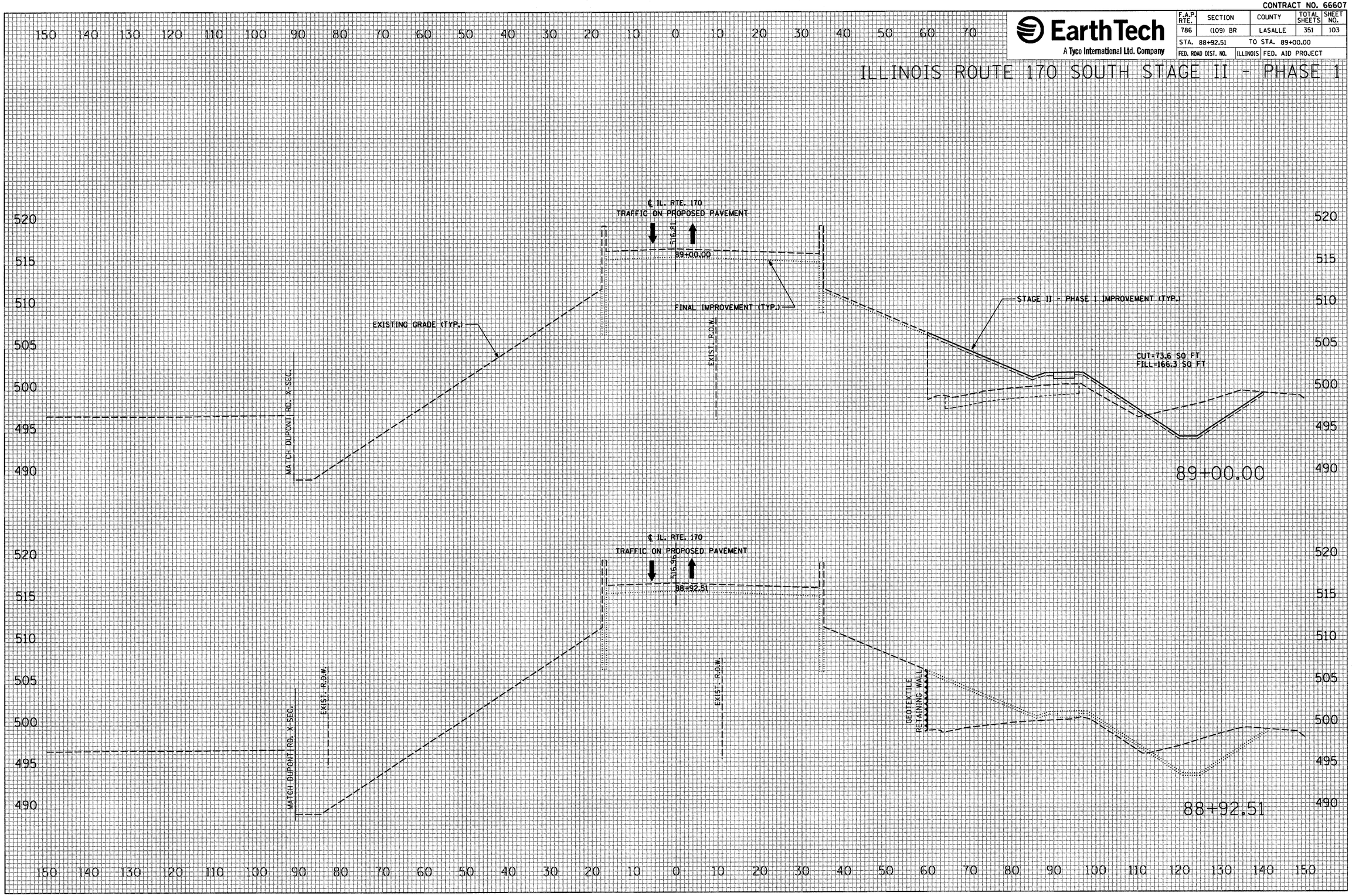

FINAL SURVEY	BY	DATE
SURVEYED		
PLOTTED		
TEMPLATE		
AREAS		
AREAS CHECKED		
NOTE BOOK NO.		

ORIGINAL SURVEY	BY	DATE
SURVEYED		
PLOTTED		
TEMPLATE		
AREAS		
AREAS CHECKED		
NOTE BOOK NO.		

PLOT DATE = 10/4/2007
FILE NAME = $FILE$
PLOT SCALE = $SCALE$
USER NAME = project

CONTRACT NO. 66607

EarthTech
A Tyco International Ltd. Company

F.A.P. RTE.	SECTION	COUNTY	TOTAL SHEETS	SHEET NO.
786	(109) BR	LASALLE	351	104
STA. 89+27.19		TO STA. 90+00.00		
FED. ROAD DIST. NO.		ILLINOIS	FED. AID PROJECT	

ILLINOIS ROUTE 170 SOUTH STAGE II - PHASE 1

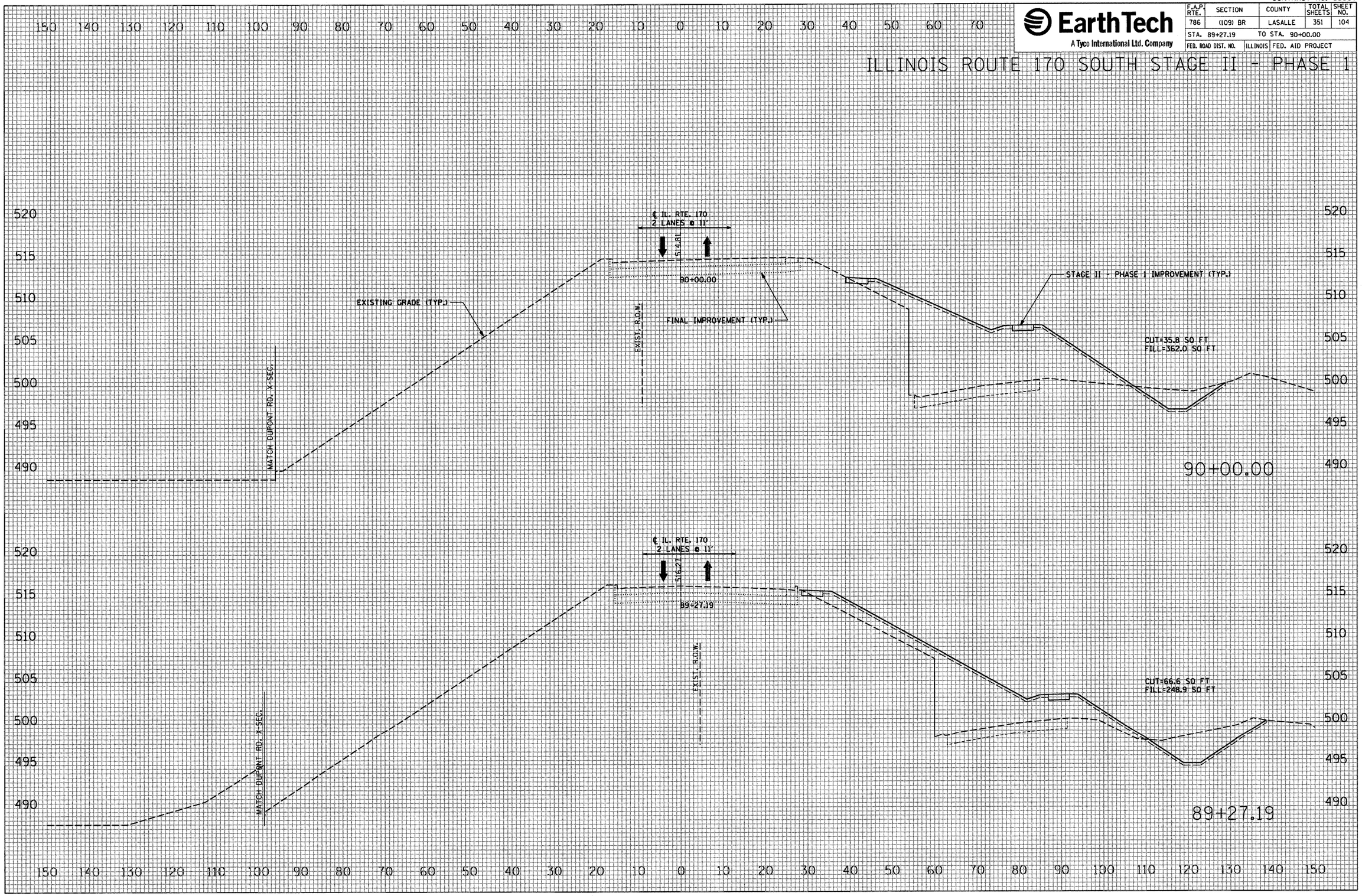

FINAL SURVEY	BY	DATE
NOTE BOOK	SURVEYED	
	PLOTTED	
	TEMPLATE	
	AREAS	
NO.	AREAS CHECKED	

ORIGINAL SURVEY	BY	DATE
NOTE BOOK	SURVEYED	
	PLOTTED	
	TEMPLATE	
	AREAS	
NO.	AREAS CHECKED	

PLOT DATE = 10/4/2007
FILE NAME = $FILEL$
PLOT SCALE = $SCALEL$
USER NAME = project

CONTRACT NO. 66607

EarthTech
A Tyco International Ltd. Company

F.A.P. RTE.	SECTION	COUNTY	TOTAL SHEETS	SHEET NO.
786	(109) BR	LASALLE	351	105
STA. 90+43.24		TO STA. 91+00.00		
FED. ROAD DIST. NO.	ILLINOIS	FED. AID PROJECT		

ILLINOIS ROUTE 170 SOUTH STAGE II - PHASE 1

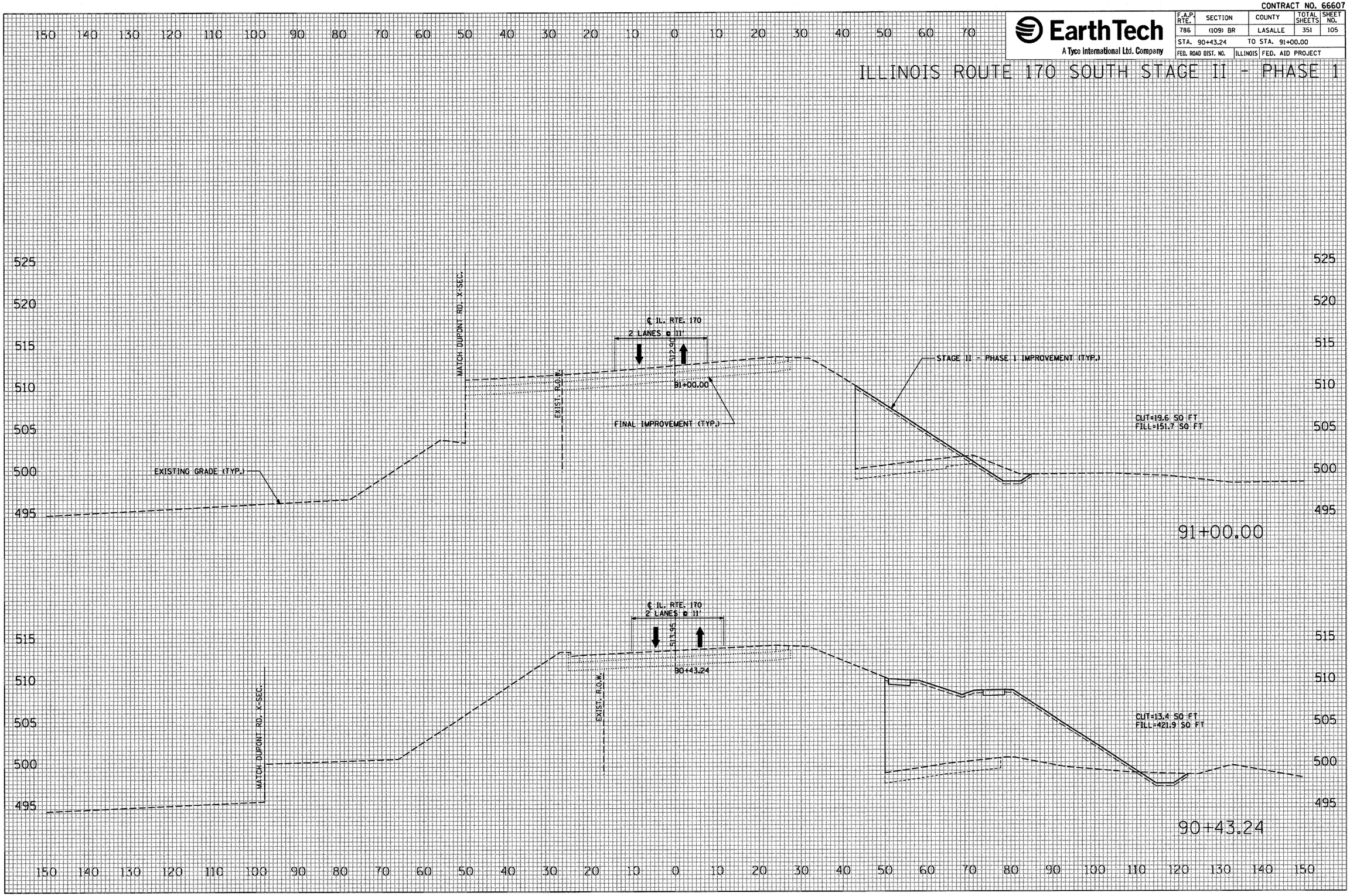

FINAL SURVEY		BY	DATE
NOTE BOOK NO.	SURVEYED		
	PLOTTED		
	TEMPLATE		
	AREAS		
	AREAS CHECKED		

ORIGINAL SURVEY		BY	DATE
NOTE BOOK NO.	SURVEYED		
	PLOTTED		
	TEMPLATE		
	AREAS		
	AREAS CHECKED		

PLOT DATE = 10/4/2007
FILE NAME = $FILEL$
PLOT SCALE = $SCALE$
USER NAME = project

CONTRACT NO. 66607

EarthTech
A Tyco International Ltd. Company

F.A.P. RTE.	SECTION	COUNTY	TOTAL SHEETS	SHEET NO.
786	(109) BR	LASALLE	351	106
STA. 92+00.00		TO STA. 94+00.00		
FED. ROAD DIST. NO.	ILLINOIS	FED. AID PROJECT		

ILLINOIS ROUTE 170 SOUTH STAGE II - PHASE 1

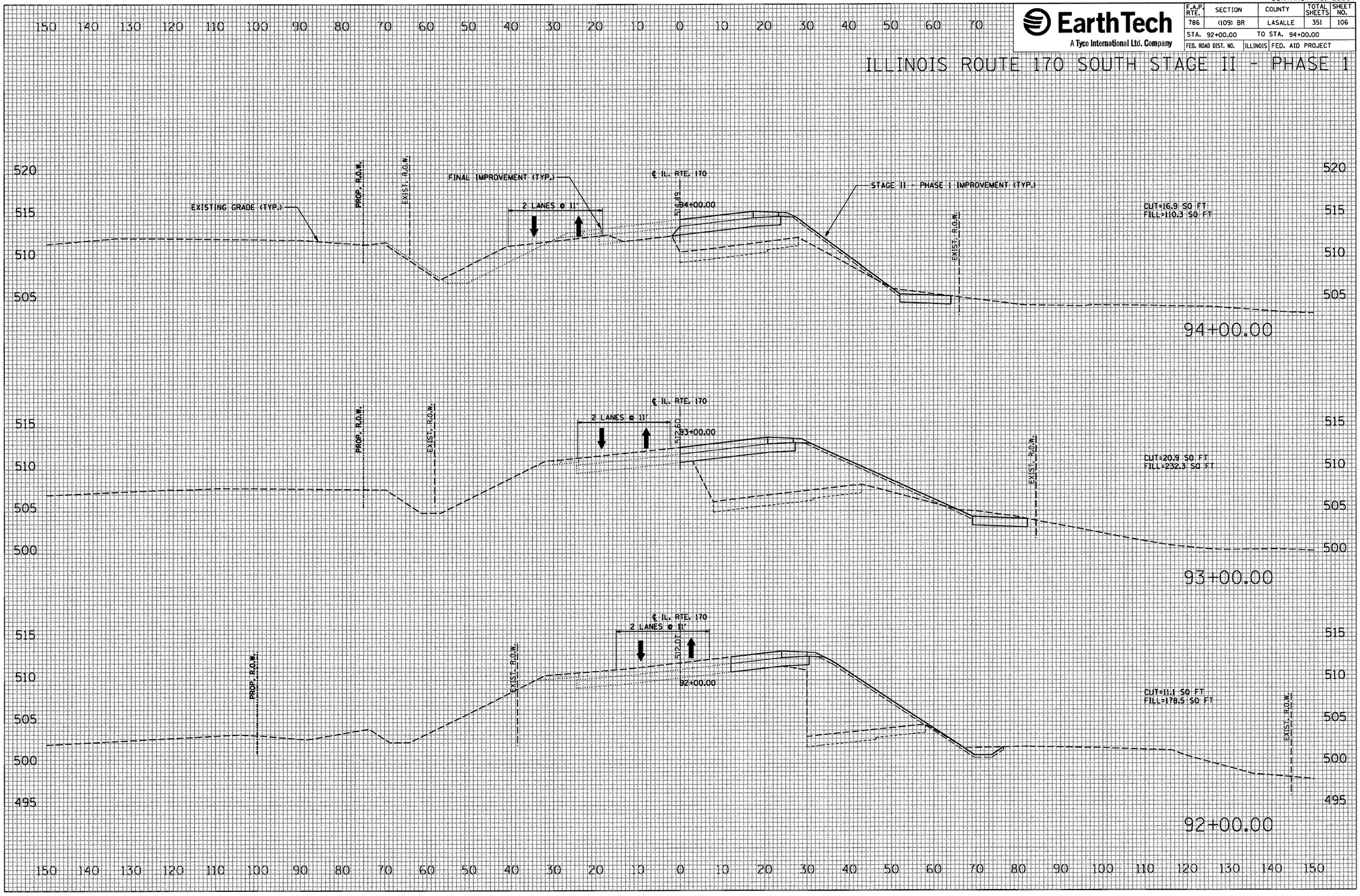

FINAL SURVEY		BY	DATE
	SURVEYED		
	PLOTTED		
	TEMPLATE		
NOTE BOOK	AREAS		
	AREAS CHECKED		
NO.			

ORIGINAL SURVEY		BY	DATE
	SURVEYED		
	PLOTTED		
	TEMPLATE		
NOTE BOOK	AREAS		
	AREAS CHECKED		
NO.			

PLOT DATE = 10/4/2007
FILE NAME = $FILE$
PLOT SCALE = $SCALE$
USER NAME = project

CONTRACT NO. 66607

EarthTech
A Tyco International Ltd. Company

F.A.P. RTE.	SECTION	COUNTY	TOTAL SHEETS	SHEET NO.
786	(109) BR	LASALLE	351	107
STA. 95+00.00		TO STA. 96+00.00		
FED. ROAD DIST. NO.	ILLINOIS	FED. AID PROJECT		

ILLINOIS ROUTE 170 SOUTH STAGE II - PHASE 1

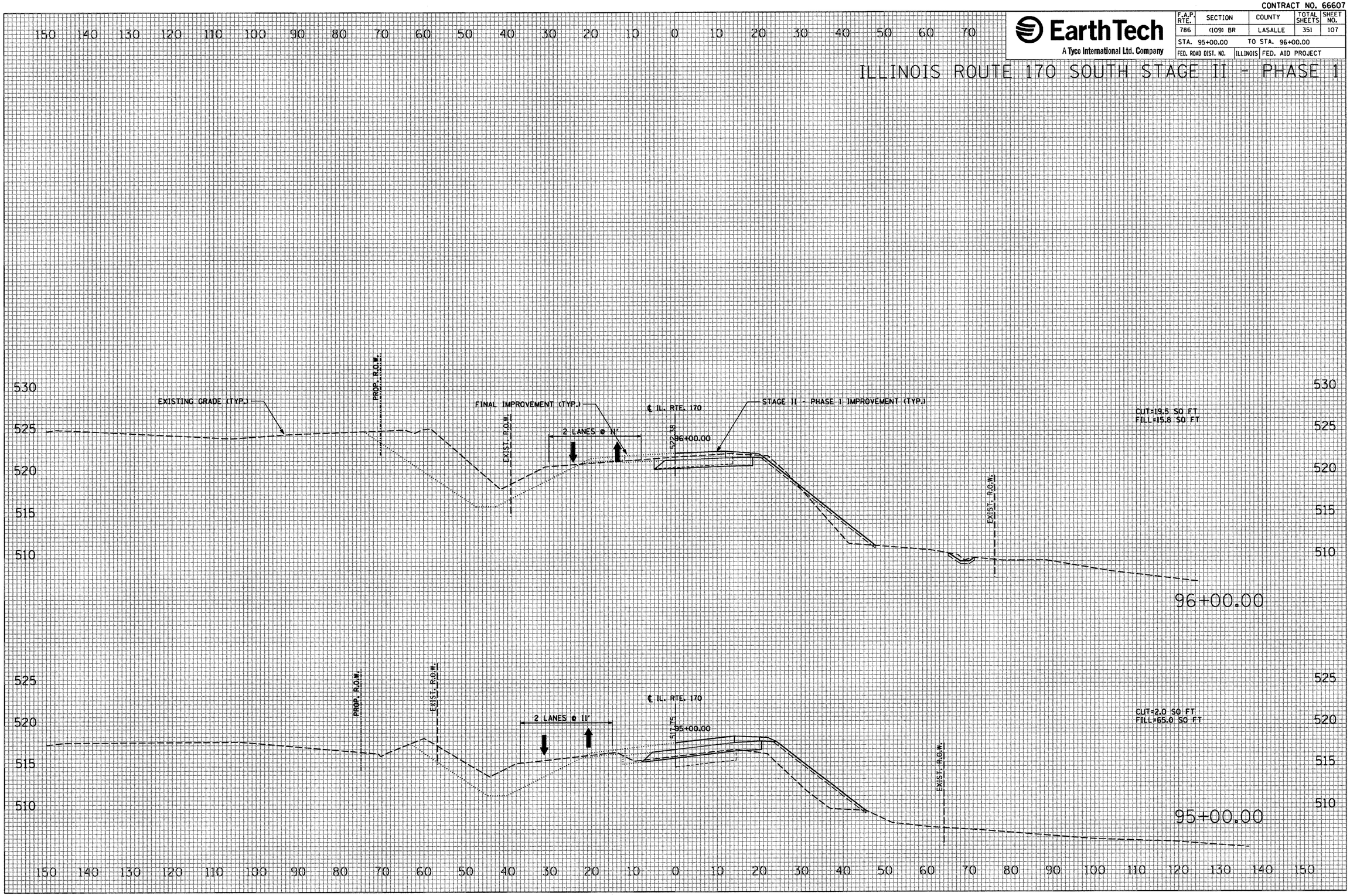

FINAL SURVEY		BY	DATE
NOTE BOOK	SURVEYED		
	PLOTTED		
	TEMPLATE		
	AREAS		
NO.	AREAS CHECKED		

ORIGINAL SURVEY		BY	DATE
NOTE BOOK	SURVEYED		
	PLOTTED		
	TEMPLATE		
	AREAS		
NO.	AREAS CHECKED		

PLOT DATE = 10/4/2007
FILE NAME = $FILEL$
PLOT SCALE = $SCALE$
USER NAME = project

CONTRACT NO. 66607

EarthTech
A Tyco International Ltd. Company

F.A.P. RTE.	SECTION	COUNTY	TOTAL SHEETS	SHEET NO.
786	(109) BR	LASALLE	351	108
STA. 96+50.00		TO STA. 96+85.00		
FED. ROAD DIST. NO.	ILLINOIS	FED. AID PROJECT		

ILLINOIS ROUTE 170 SOUTH STAGE II - PHASE 1

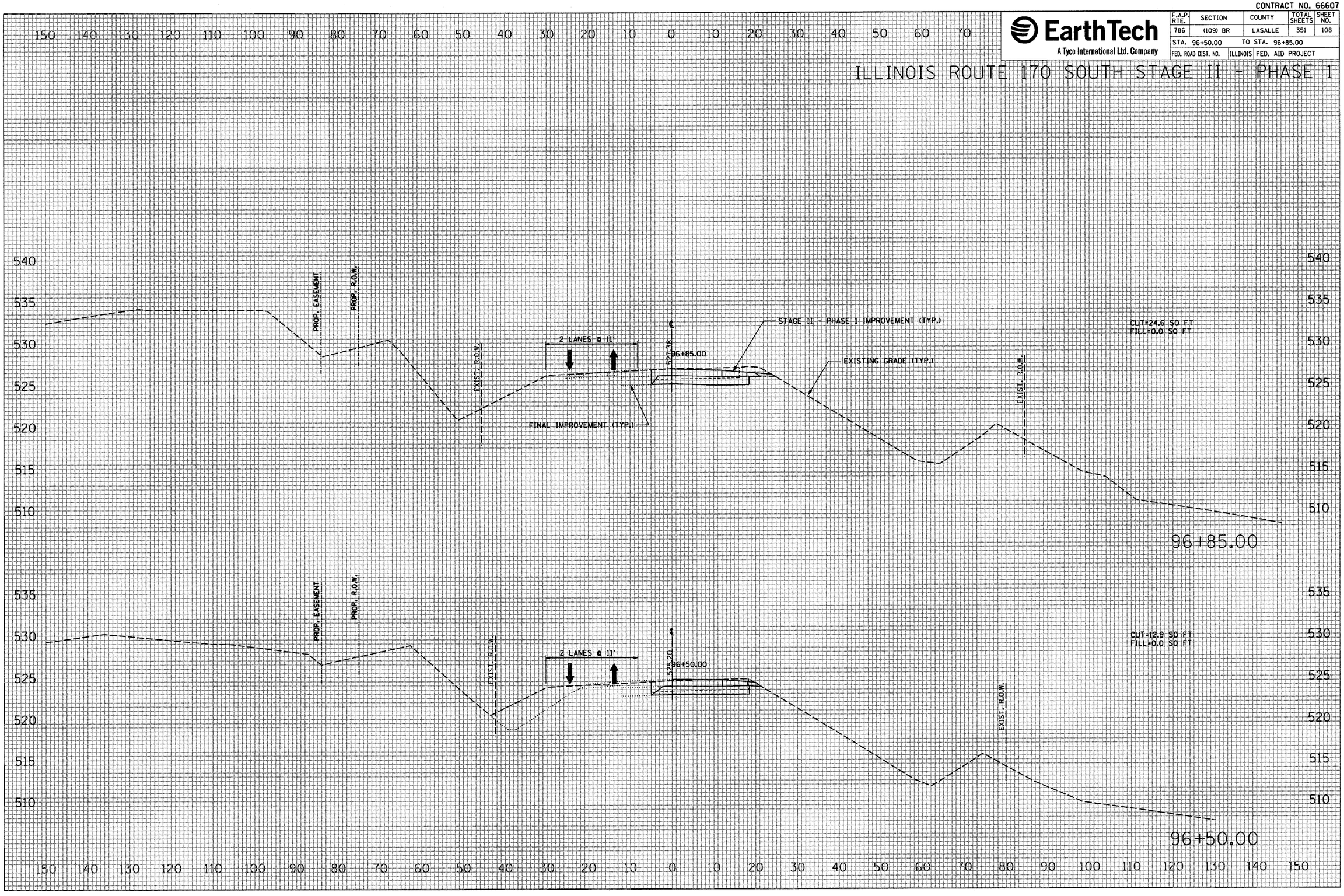

FINAL SURVEY	BY	DATE
SURVEYED		
PLOTTED		
TEMPLATE		
AREAS		
AREAS CHECKED		
NOTE BOOK NO.		

ORIGINAL SURVEY	BY	DATE
SURVEYED		
PLOTTED		
TEMPLATE		
AREAS		
AREAS CHECKED		
NOTE BOOK NO.		

PLOT DATE = 10/4/2007
FILE NAME = $FILE$
PLOT SCALE = $SCALE$
USER NAME = proj.pct

CONTRACT NO. 66607

EarthTech
A Tyco International Ltd. Company

F.A.P. RTE.	SECTION	COUNTY	TOTAL SHEETS	SHEET NO.
786	(109) BR	LASALLE	351	109
STA. 97+00.00		TO STA. 97+49.49		
FED. ROAD DIST. NO.	ILLINOIS	FED. AID PROJECT		

ILLINOIS ROUTE 170 SOUTH STAGE II - PHASE 1

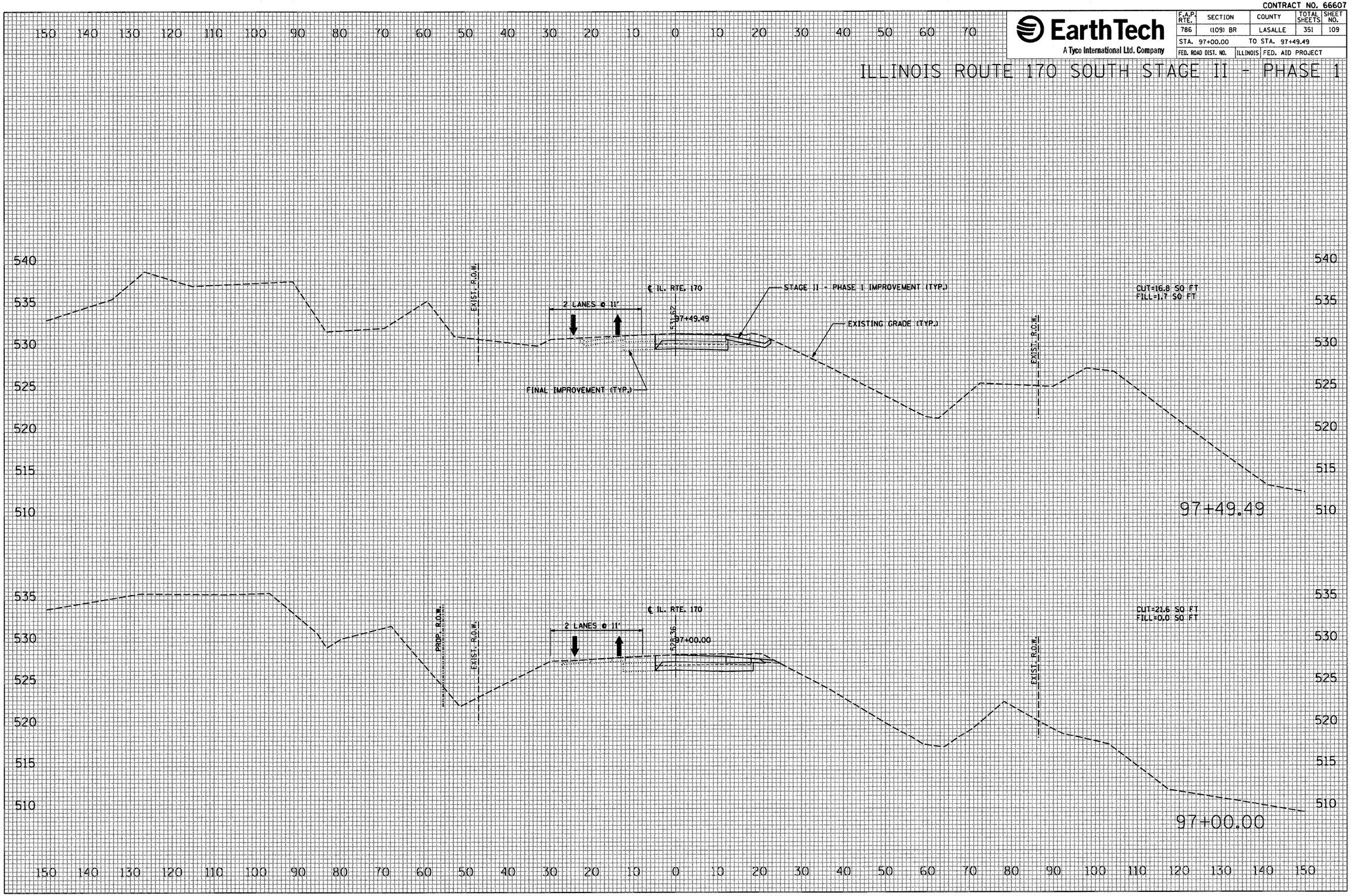

FINAL SURVEY		BY	DATE
NOTE BOOK	SURVEYED		
	PLOTTED		
	TEMPLATE		
	AREAS		
NO.	AREAS CHECKED		

ORIGINAL SURVEY		BY	DATE
NOTE BOOK	SURVEYED		
	PLOTTED		
	TEMPLATE		
	AREAS		
NO.	AREAS CHECKED		

PLOT DATE = 10/4/2007
FILE NAME = $FILEL$
PLOT SCALE = $SCALE$
USER NAME = project

CONTRACT NO. 66607

EarthTech
A Tyco International Ltd. Company

F.A.P. RTE.	SECTION	COUNTY	TOTAL SHEETS	SHEET NO.
786	(109) BR	LASALLE	351	110
STA. 97+73.55		TO STA. 98+00.00		
FED. ROAD DIST. NO.		ILLINOIS	FED. AID PROJECT	

ILLINOIS ROUTE 170 SOUTH STAGE II - PHASE 1

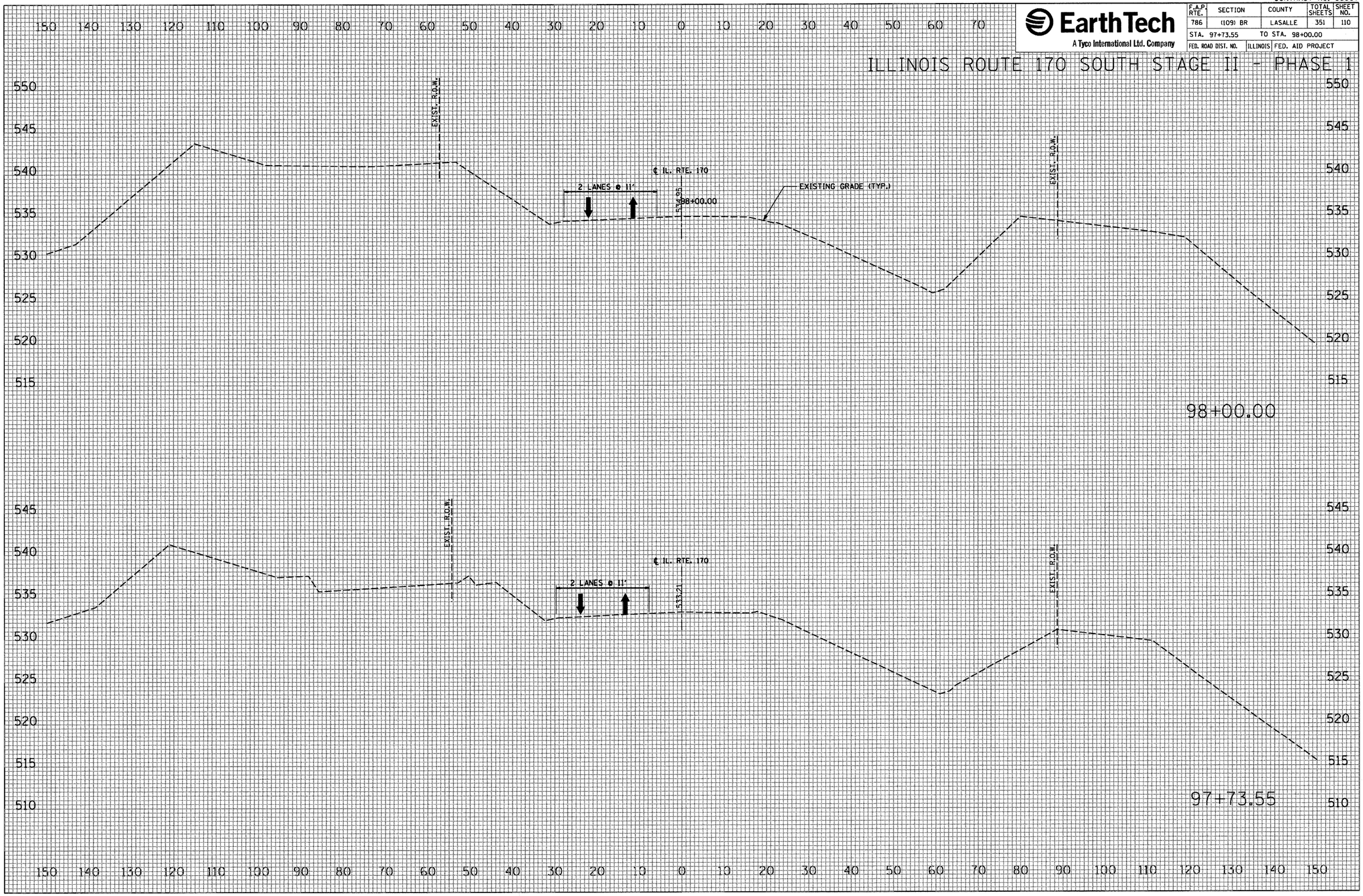

FINAL SURVEY | NOTE BOOK NO. | SURVEYED | PLOTTED | TEMPLATE | AREAS | AREAS CHECKED | BY | DATE

ORIGINAL SURVEY | NOTE BOOK NO. | SURVEYED | PLOTTED | TEMPLATE | AREAS | AREAS CHECKED | BY | DATE

PLOT DATE = 10/4/2007
FILE NAME = $FILEL$
PLOT SCALE = $SCALE$
USER NAME = project

CONTRACT NO. 66607

EarthTech
A Tyco International Ltd. Company

F.A.P. RTE.	SECTION	COUNTY	TOTAL SHEETS	SHEET NO.
786	(109) BR	LASALLE	351	111
STA. 99+00.00		TO STA. 99+00.00		
FED. ROAD DIST. NO.	ILLINOIS	FED. AID PROJECT		

ILLINOIS ROUTE 170 SOUTH STAGE II - PHASE 1

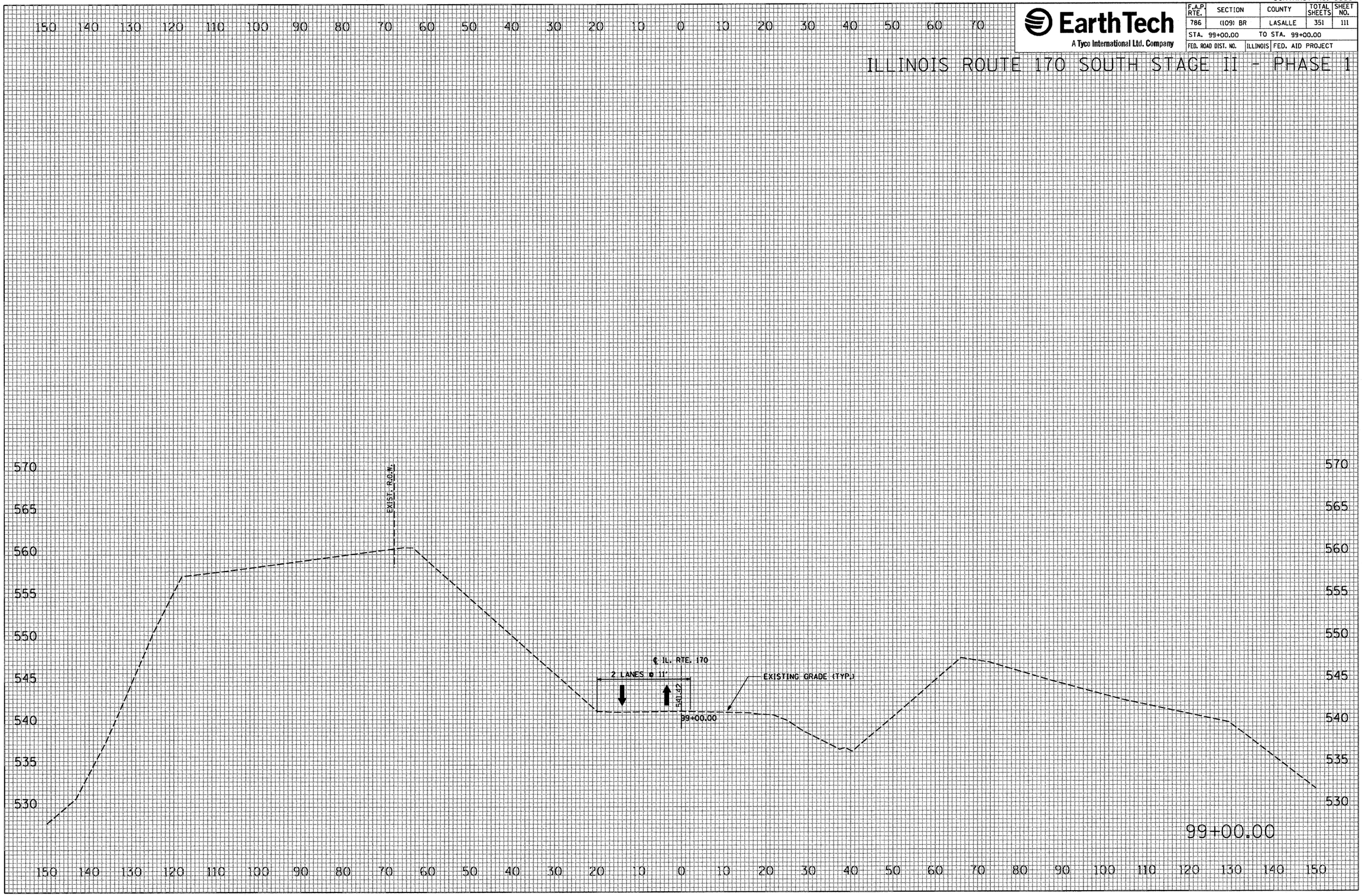

FINAL SURVEY		BY	DATE
	SURVEYED		
	PLOTTED		
	TEMPLATE		
NOTE BOOK	AREAS		
	AREAS CHECKED		
NO.			

ORIGINAL SURVEY		BY	DATE
	SURVEYED		
	PLOTTED		
	TEMPLATE		
NOTE BOOK	AREAS		
	AREAS CHECKED		
NO.			

PLOT DATE = 10/4/2007
FILE NAME = $FILE$
PLOT SCALE = $SCALE$
USER NAME = proj_mct

CONTRACT NO. 66607

EarthTech
A Tyco International Ltd. Company

F.A.P. RTE.	SECTION	COUNTY	TOTAL SHEETS	SHEET NO.
786	(109) BR	LASALLE	351	112
STA. 100+00.00		TO STA. 100+00.00		
FED. ROAD DIST. NO.	ILLINOIS	FED. AID PROJECT		

ILLINOIS ROUTE 170 SOUTH STAGE II - PHASE 1

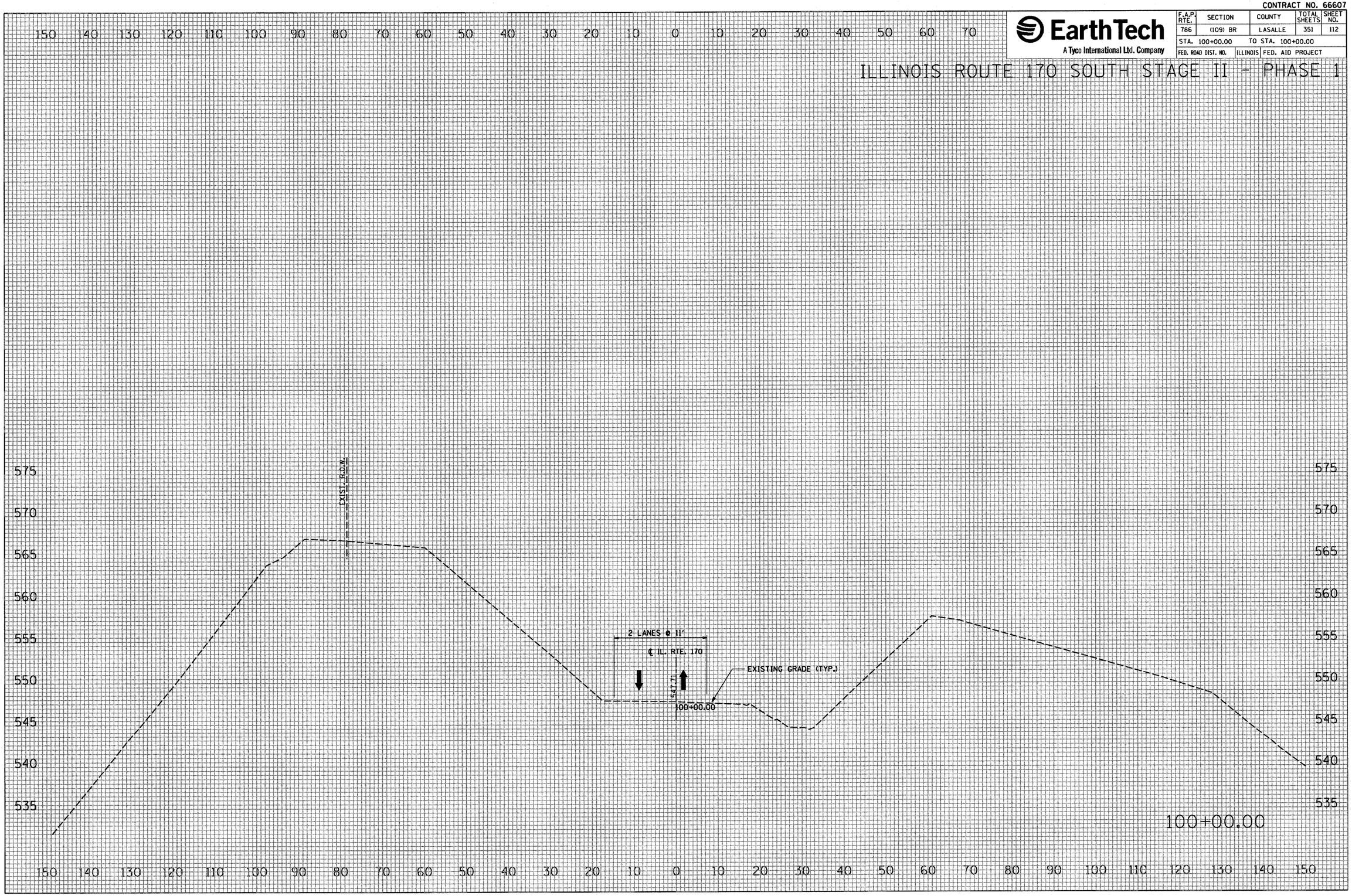

FINAL SURVEY		BY	DATE
NOTE BOOK	SURVEYED		
	PLOTTED		
	TEMPLATE		
NO.	AREAS		
	AREAS CHECKED		

ORIGINAL SURVEY		BY	DATE
NOTE BOOK	SURVEYED		
	PLOTTED		
	TEMPLATE		
NO.	AREAS		
	AREAS CHECKED		

PLOT DATE = 10/4/2007
FILE NAME = $FILEL$
PLOT SCALE = $SCALE$
USER NAME = project

CONTRACT NO. 66607

EarthTech
A Tyco International Ltd. Company

F.A.P. RTE.	SECTION	COUNTY	TOTAL SHEETS	SHEET NO.
786	(109) BR	LASALLE	351	113
STA. 148+00.00		TO STA. 150+00.00		
FED. ROAD DIST. NO.	ILLINOIS	FED. AID PROJECT		

DUPONT ROAD STAGE II - PHASE 1

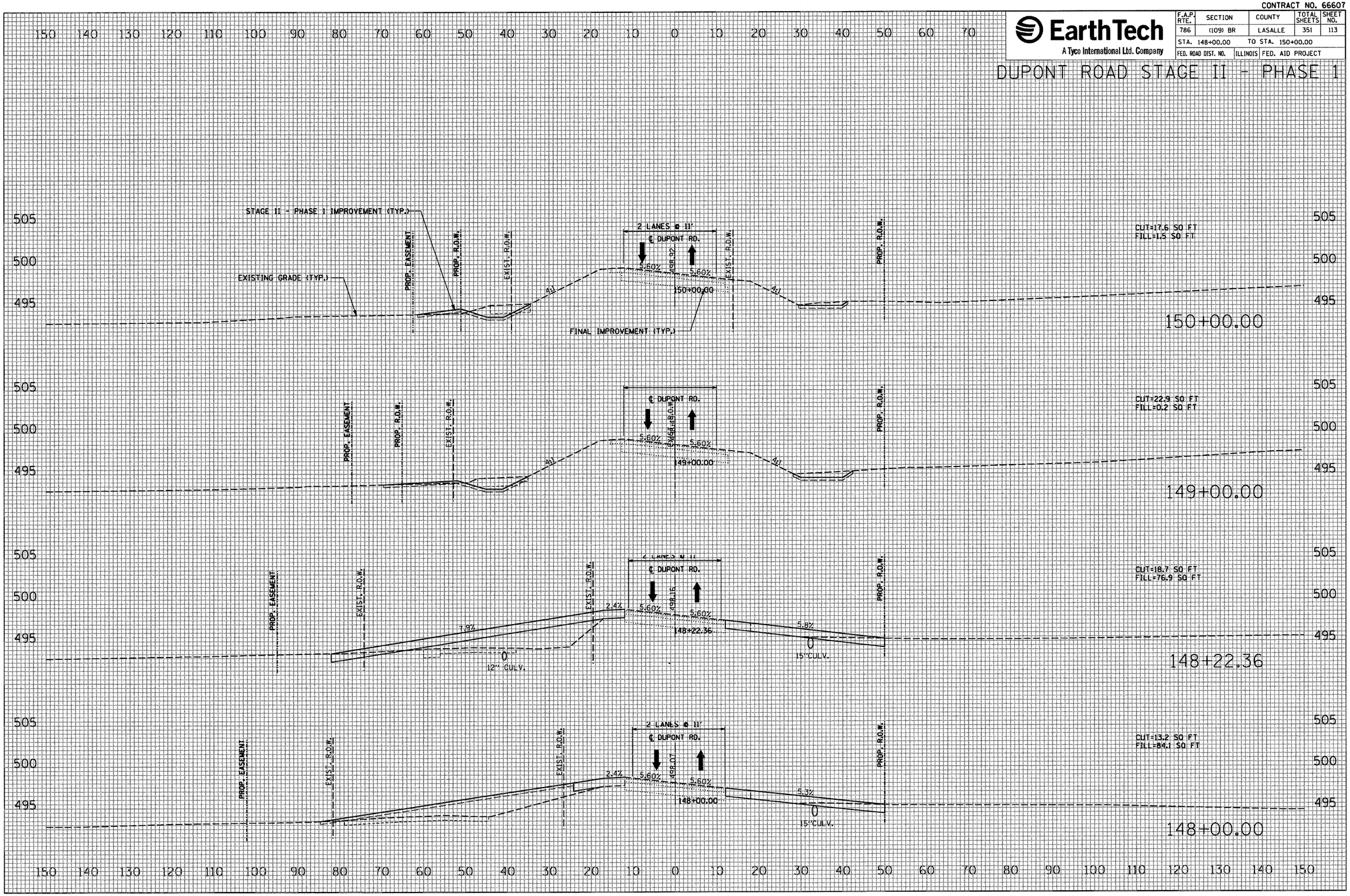

FINAL SURVEY		BY	DATE
NOTE BOOK	SURVEYED		
	PLOTTED		
	TEMPLATE		
	AREAS		
NO.	AREAS CHECKED		

ORIGINAL SURVEY		BY	DATE
NOTE BOOK	SURVEYED		
	PLOTTED		
	TEMPLATE		
	AREAS		
NO.	AREAS CHECKED		

PLOT DATE = 10/1/2007
FILE NAME = $FILE$
PLOT SCALE = $SCALE$
USER NAME = project

CONTRACT NO. 66607

EarthTech
A Tyco International Ltd. Company

F.A.P. RTE.	SECTION	COUNTY	TOTAL SHEETS	SHEET NO.
786	(109) BR	LASALLE	351	114
STA. 151+00.00		TO STA. 153+00.00		
FED. ROAD DIST. NO.	ILLINOIS	FED. AID PROJECT		

DUPONT ROAD STAGE II - PHASE 1

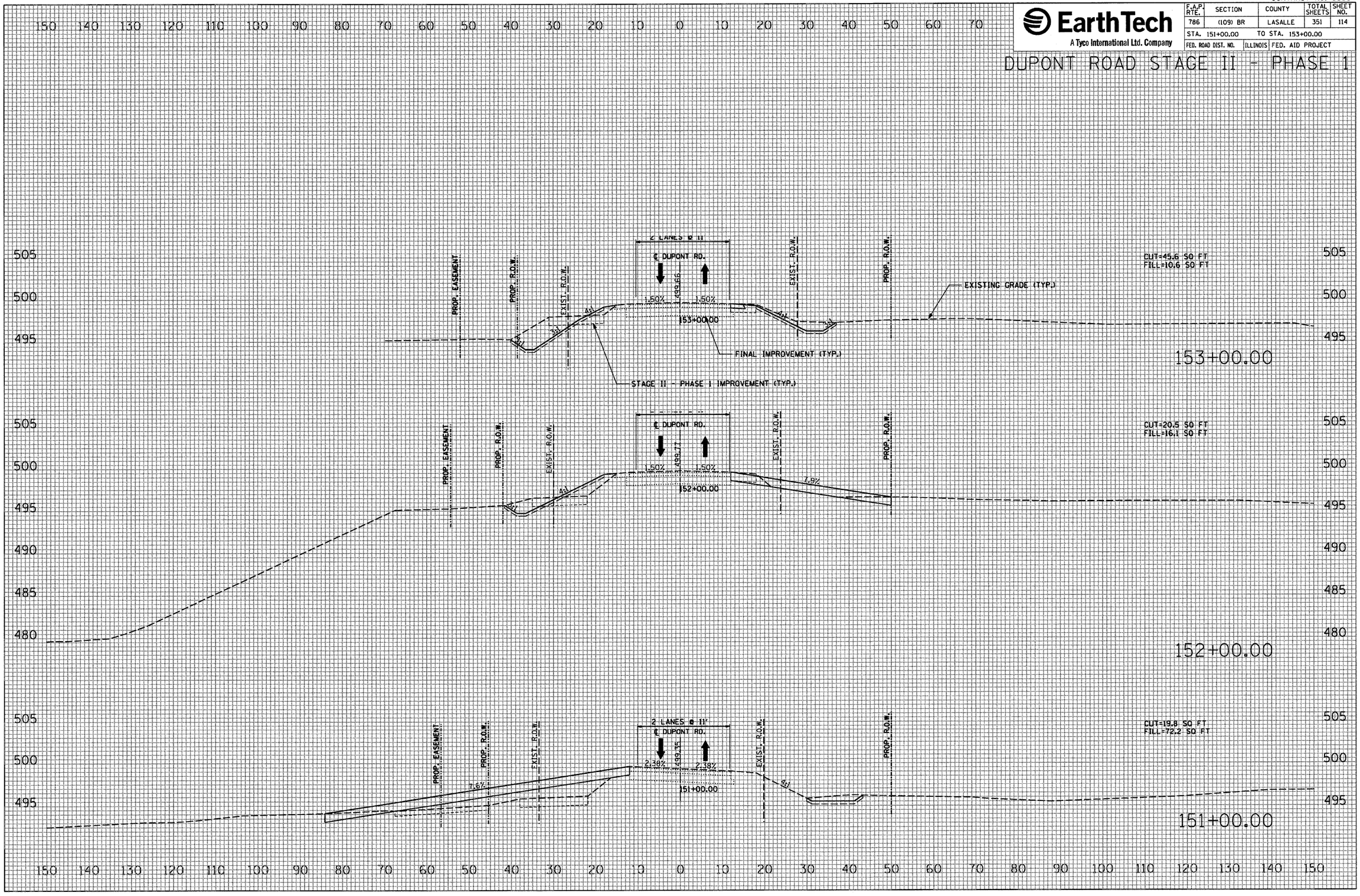

FINAL SURVEY		BY	DATE
NOTE BOOK	SURVEYED		
	PLOTTED		
	TEMPLATE		
	AREAS		
NO.	AREAS CHECKED		

ORIGINAL SURVEY		BY	DATE
NOTE BOOK	SURVEYED		
	PLOTTED		
	TEMPLATE		
	AREAS		
NO.	AREAS CHECKED		

PLOT DATE = 10/4/2007
FILE NAME = $FILEL$
PLOT SCALE = $SCALE$
USER NAME = project

CONTRACT NO. 66607

EarthTech
A Tyco International Ltd. Company

F.A.P. RTE.	SECTION	COUNTY	TOTAL SHEETS	SHEET NO.
786	(109) BR	LASALLE	351	115
STA. 154+00.00		TO STA. 154+00.00		
FED. ROAD DIST. NO.	ILLINOIS	FED. AID PROJECT		

DUPONT ROAD STAGE II - PHASE 1

FINAL SURVEY		BY	DATE
	SURVEYED		
	PLOTTED		
	TEMPLATE		
NOTE BOOK	AREAS		
NO.	AREAS CHECKED		

ORIGINAL SURVEY		BY	DATE
	SURVEYED		
	PLOTTED		
	TEMPLATE		
NOTE BOOK	AREAS		
NO.	AREAS CHECKED		

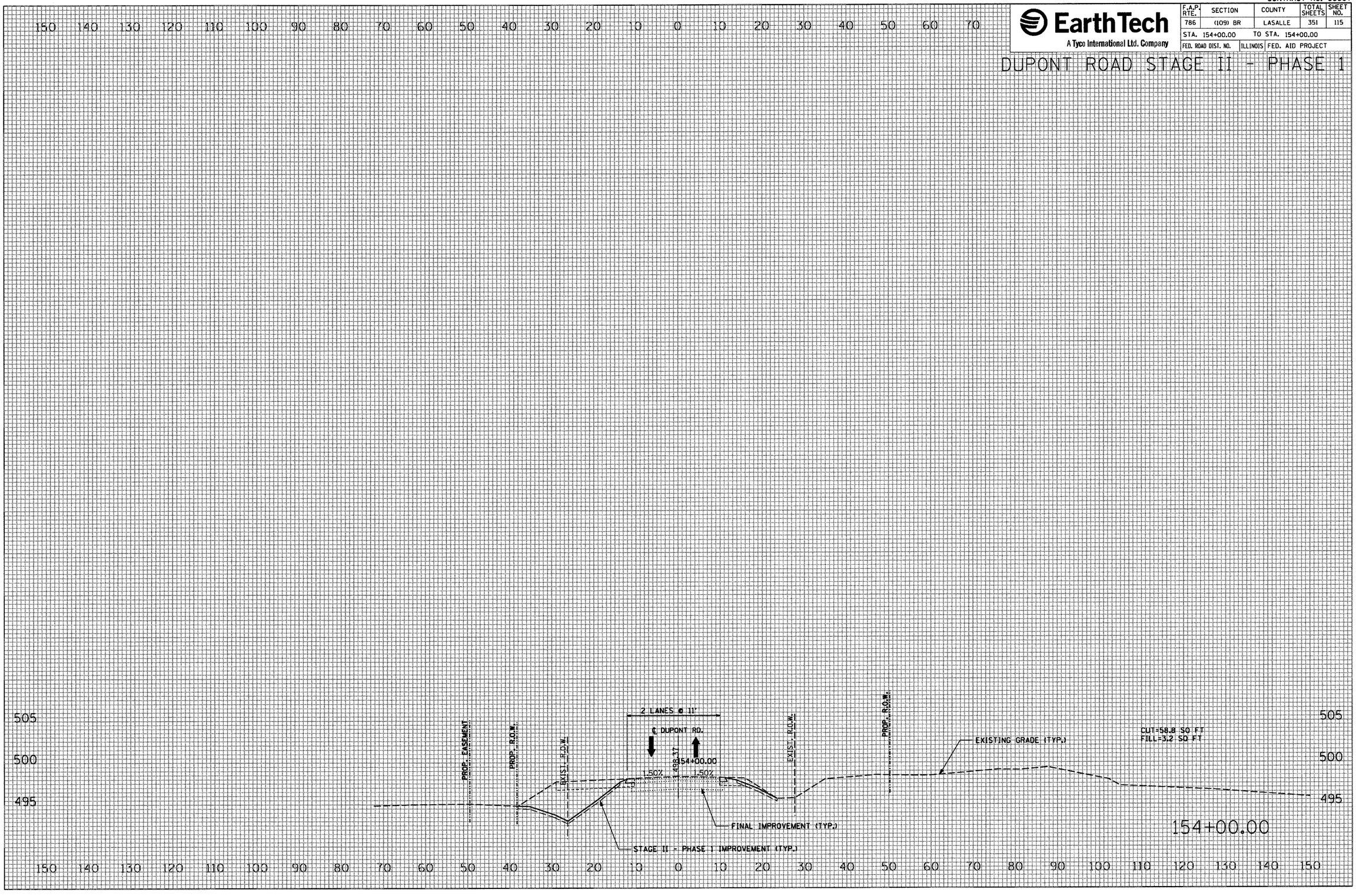

PLOT DATE = 10/4/2007
FILE NAME = $FILE$
PLOT SCALE = $SCALE$
USER NAME = project

CONTRACT NO. 66607

EarthTech
A Tyco International Ltd. Company

F.A.P. RTE.	SECTION	COUNTY	TOTAL SHEETS	SHEET NO.
786	(109) BR	LASALLE	351	116
STA. 17+50.00		TO STA. 18+50.00		
FED. ROAD DIST. NO.	ILLINOIS	FED. AID PROJECT		

RIVER ROAD STAGE II - PHASE 1

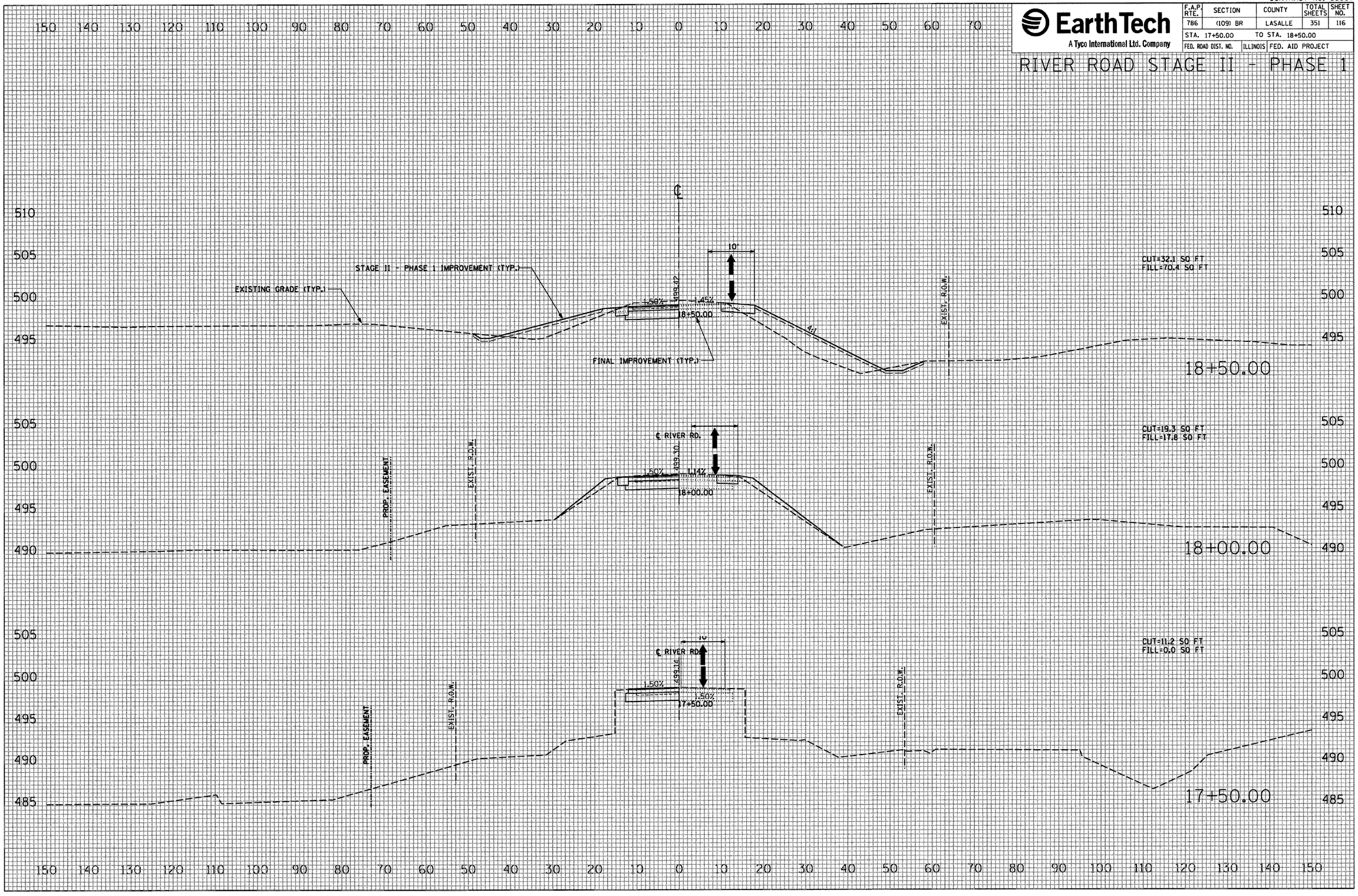

FINAL SURVEY	BY	DATE
SURVEYED		
PLOTTED		
NOTE BOOK TEMPLATE		
AREAS		
NO. AREAS CHECKED		

ORIGINAL SURVEY	BY	DATE
SURVEYED		
PLOTTED		
NOTE BOOK TEMPLATE		
AREAS		
NO. AREAS CHECKED		

PLOT DATE = 10/4/2007
FILE NAME = $FILEL$
PLOT SCALE = $SCALE$
USER NAME = project

CONTRACT NO. 66607

EarthTech
A Tyco International Ltd. Company

F.A.P. RTE.	SECTION	COUNTY	TOTAL SHEETS	SHEET NO.
786	(109) BR	LASALLE	351	117
STA. 19+00.00		TO STA. 19+40.00		
FED. ROAD DIST. NO.		ILLINOIS	FED. AID PROJECT	

RIVER ROAD STAGE II - PHASE 1

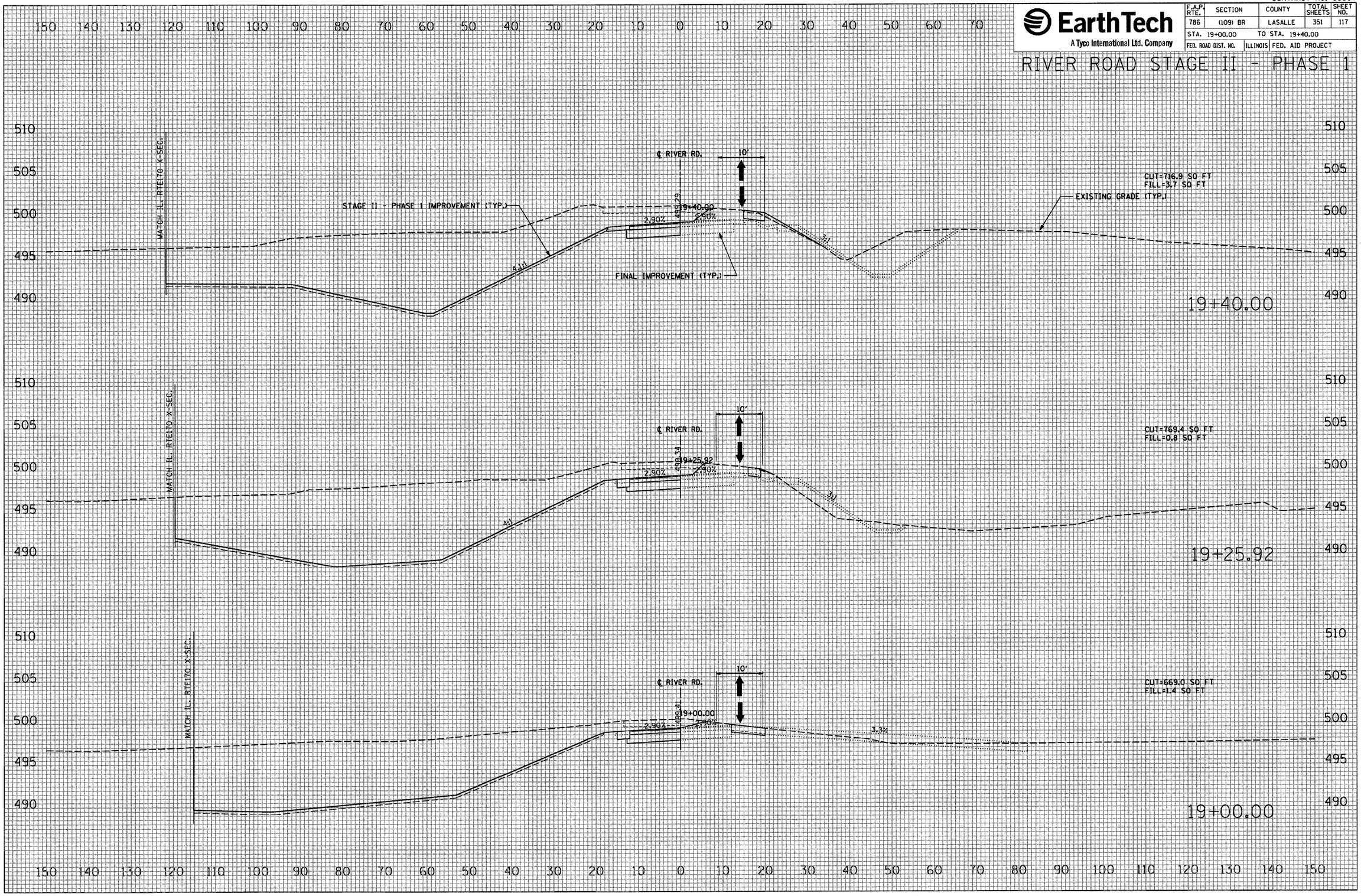

FINAL SURVEY		BY	DATE
	SURVEYED		
	PLOTTED		
NOTE BOOK	TEMPLATE		
	AREAS		
NO.	AREAS CHECKED		

ORIGINAL SURVEY		BY	DATE
	SURVEYED		
	PLOTTED		
NOTE BOOK	TEMPLATE		
	AREAS		
NO.	AREAS CHECKED		

PLOT DATE = 10/4/2007
FILE NAME = $FILEL$
PLOT SCALE = $SCALE$
USER NAME = project

CONTRACT NO. 66607

EarthTech
A Tyco International Ltd. Company

F.A.P. RTE.	SECTION	COUNTY	TOTAL SHEETS	SHEET NO.
786	(109) BR	LASALLE	351	118
STA. 19+50.00		TO STA. 20+50.00		
FED. ROAD DIST. NO.	ILLINOIS	FED. AID PROJECT		

RIVER ROAD STAGE II - PHASE 1

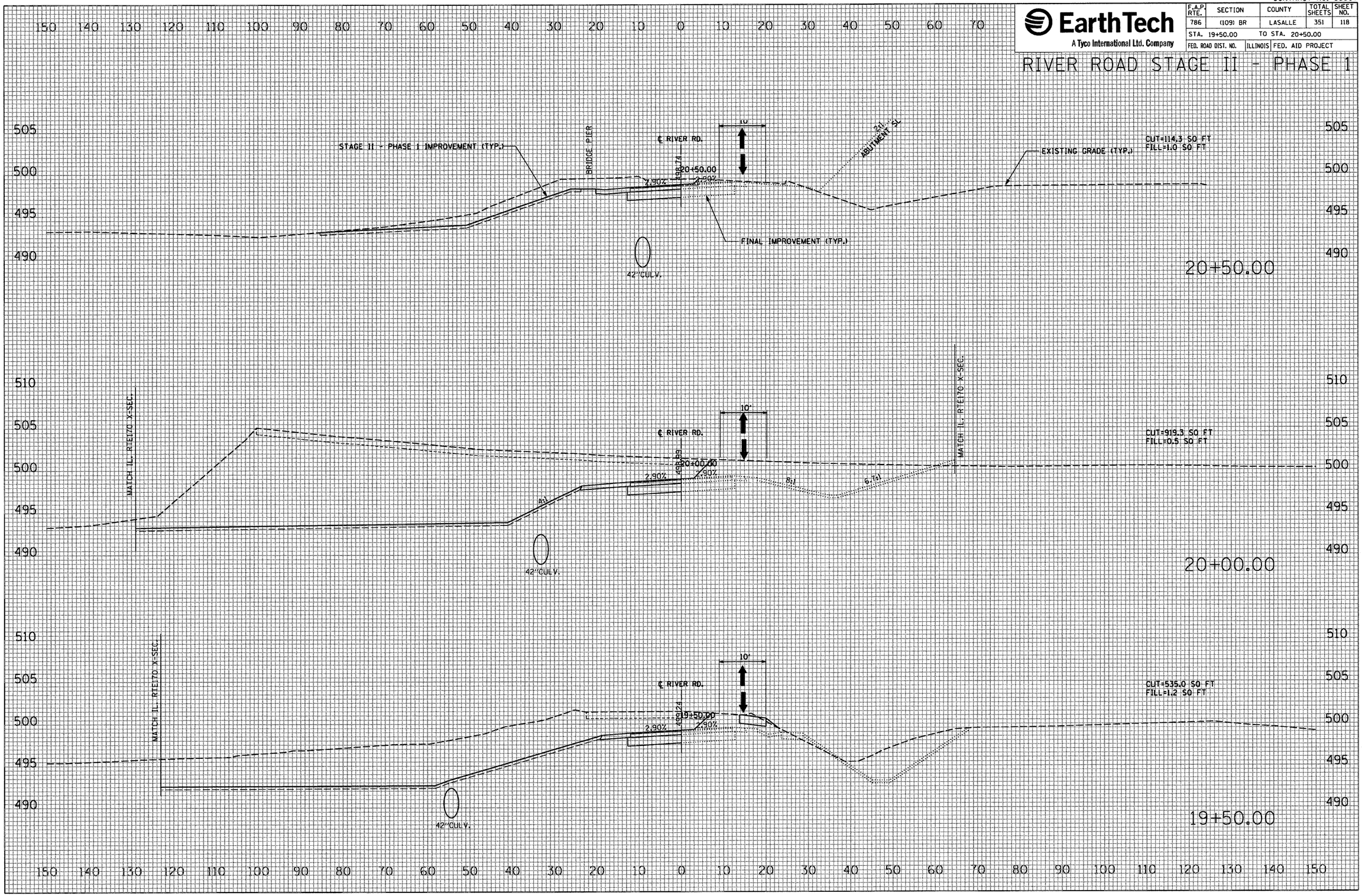

FINAL SURVEY		BY	DATE
NOTE BOOK NO.	SURVEYED		
	PLOTTED		
	TEMPLATE		
	AREAS		
	AREAS CHECKED		

ORIGINAL SURVEY		BY	DATE
NOTE BOOK NO.	SURVEYED		
	PLOTTED		
	TEMPLATE		
	AREAS		
	AREAS CHECKED		

PLOT DATE = 10/4/2007
FILE NAME = $FILEL$
PLOT SCALE = $SCALE$
USER NAME = project

CONTRACT NO. 66607

EarthTech
A Tyco International Ltd. Company

F.A.P. RTE.	SECTION	COUNTY	TOTAL SHEETS	SHEET NO.
786	(109) BR	LASALLE	351	119
STA. 21+00.00		TO STA. 22+00.00		
FED. ROAD DIST. NO.	ILLINOIS	FED. AID PROJECT		

RIVER ROAD STAGE II - PHASE 1

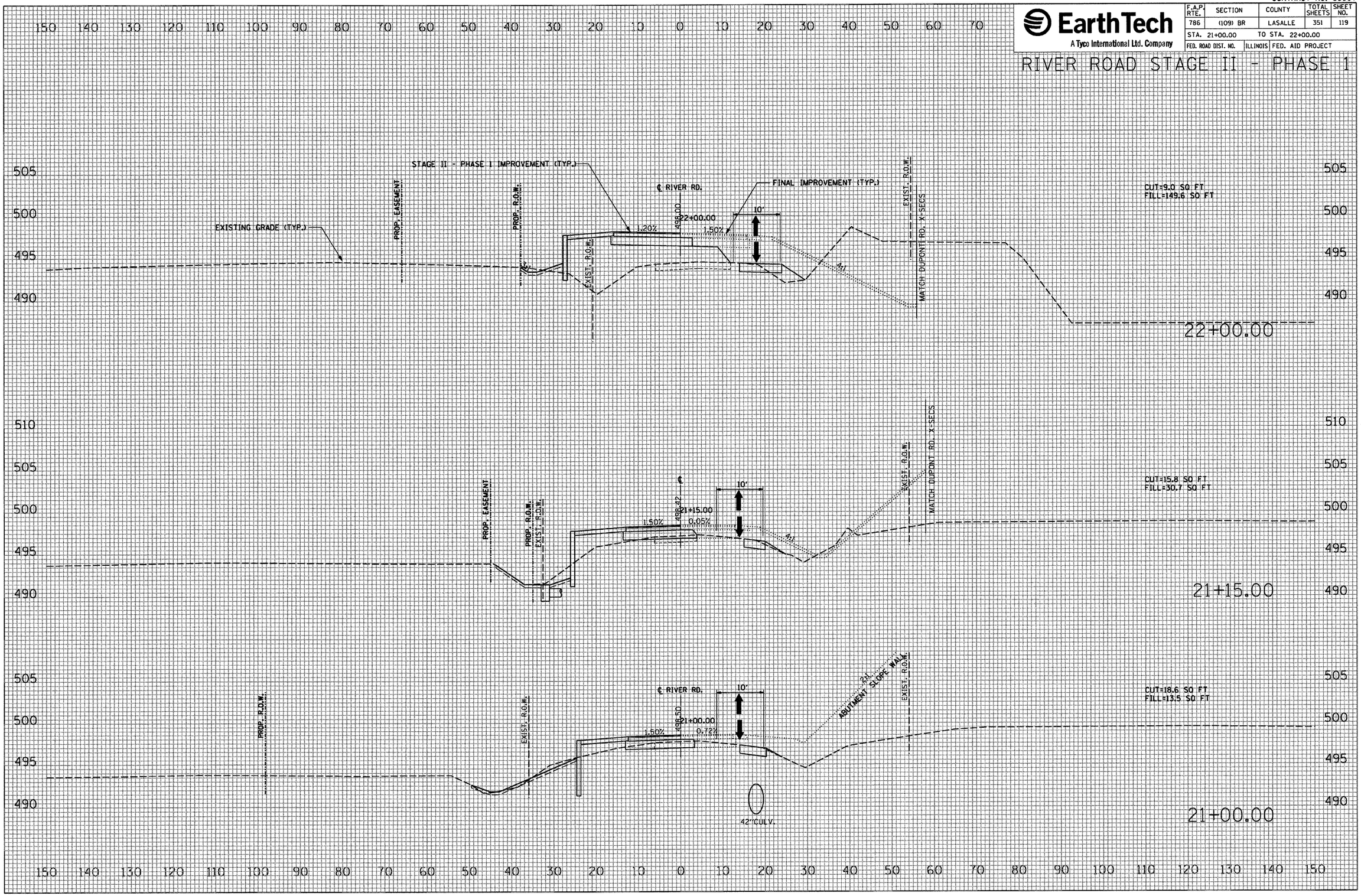

FINAL SURVEY		BY	DATE
NOTE BOOK	SURVEYED		
	PLOTTED		
	TEMPLATE		
	AREAS		
NO.	AREAS CHECKED		

ORIGINAL SURVEY		BY	DATE
NOTE BOOK	SURVEYED		
	PLOTTED		
	TEMPLATE		
	AREAS		
NO.	AREAS CHECKED		

PLOT DATE = 10/4/2007
FILE NAME = $FILE$
PLOT SCALE = $SCALE$
USER NAME = pr-0_mct

CONTRACT NO. 66607

F.A.P. RTE.	SECTION	COUNTY	TOTAL SHEETS	SHEET NO.
786	(109) BR	LASALLE	351	120
STA. 23+00.00		TO STA. 23+80.00		
FED. ROAD DIST. NO.	ILLINOIS	FED. AID PROJECT		

EarthTech
A Tyco International Ltd. Company

RIVER ROAD STAGE II - PHASE 1

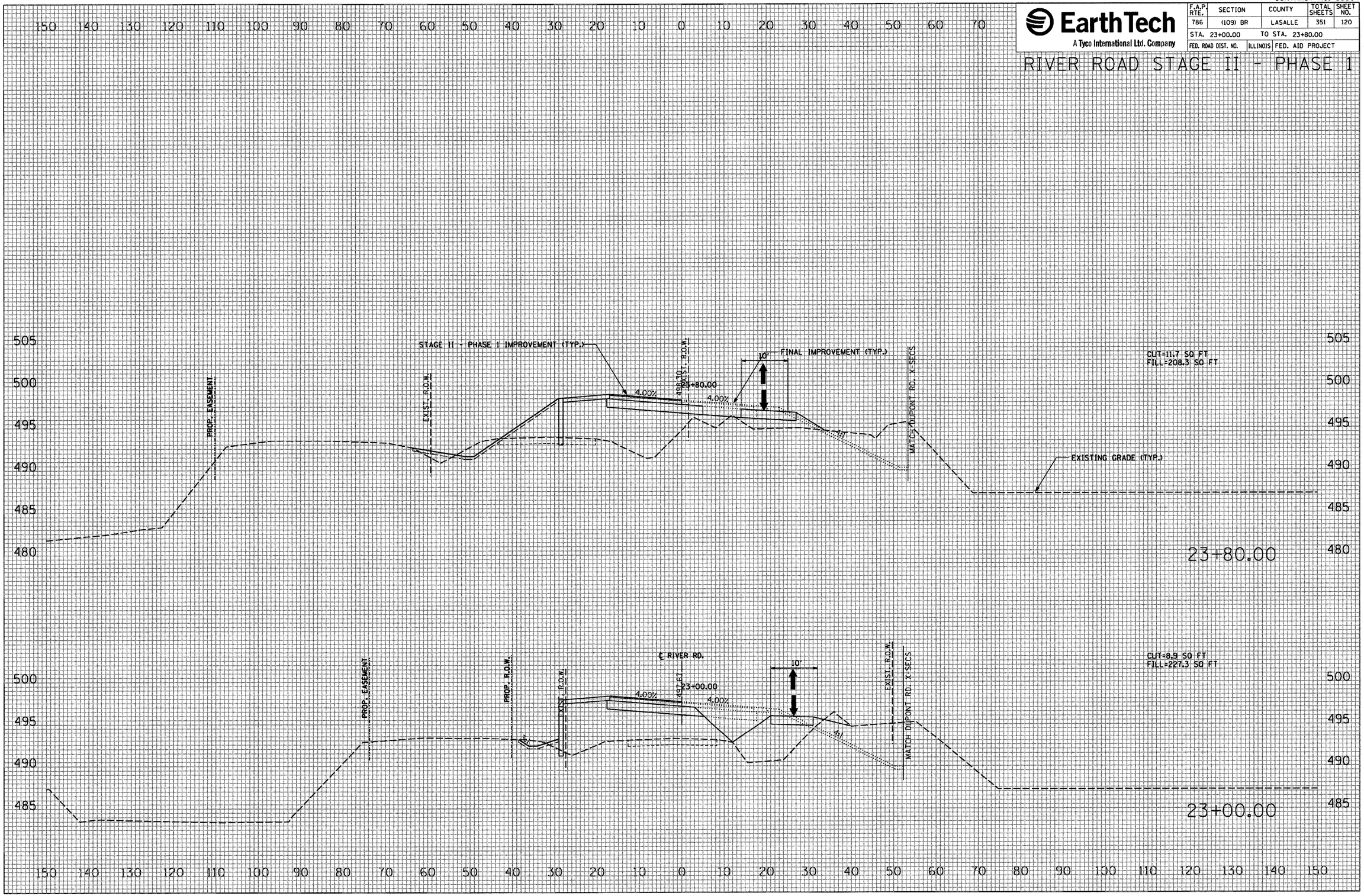

FINAL SURVEY		BY	DATE
NOTE BOOK	SURVEYED		
	PLOTTED		
	TEMPLATE		
	AREAS		
NO.	AREAS CHECKED		

ORIGINAL SURVEY		BY	DATE
NOTE BOOK	SURVEYED		
	PLOTTED		
	TEMPLATE		
	AREAS		
NO.	AREAS CHECKED		

PLOT DATE = 10/4/2007
FILE NAME = $FILEL$
PLOT SCALE = $SCALE$
USER NAME = pw_jack

CONTRACT NO. 66607

EarthTech
A Tyco International Ltd. Company

F.A.P. RTE.	SECTION	COUNTY	TOTAL SHEETS	SHEET NO.
786	(109) BR	LASALLE	351	121
STA. 24+00.00		TO STA. 24+00.00		
FED. ROAD DIST. NO.	ILLINOIS	FED. AID PROJECT		

RIVER ROAD STAGE II - PHASE 1

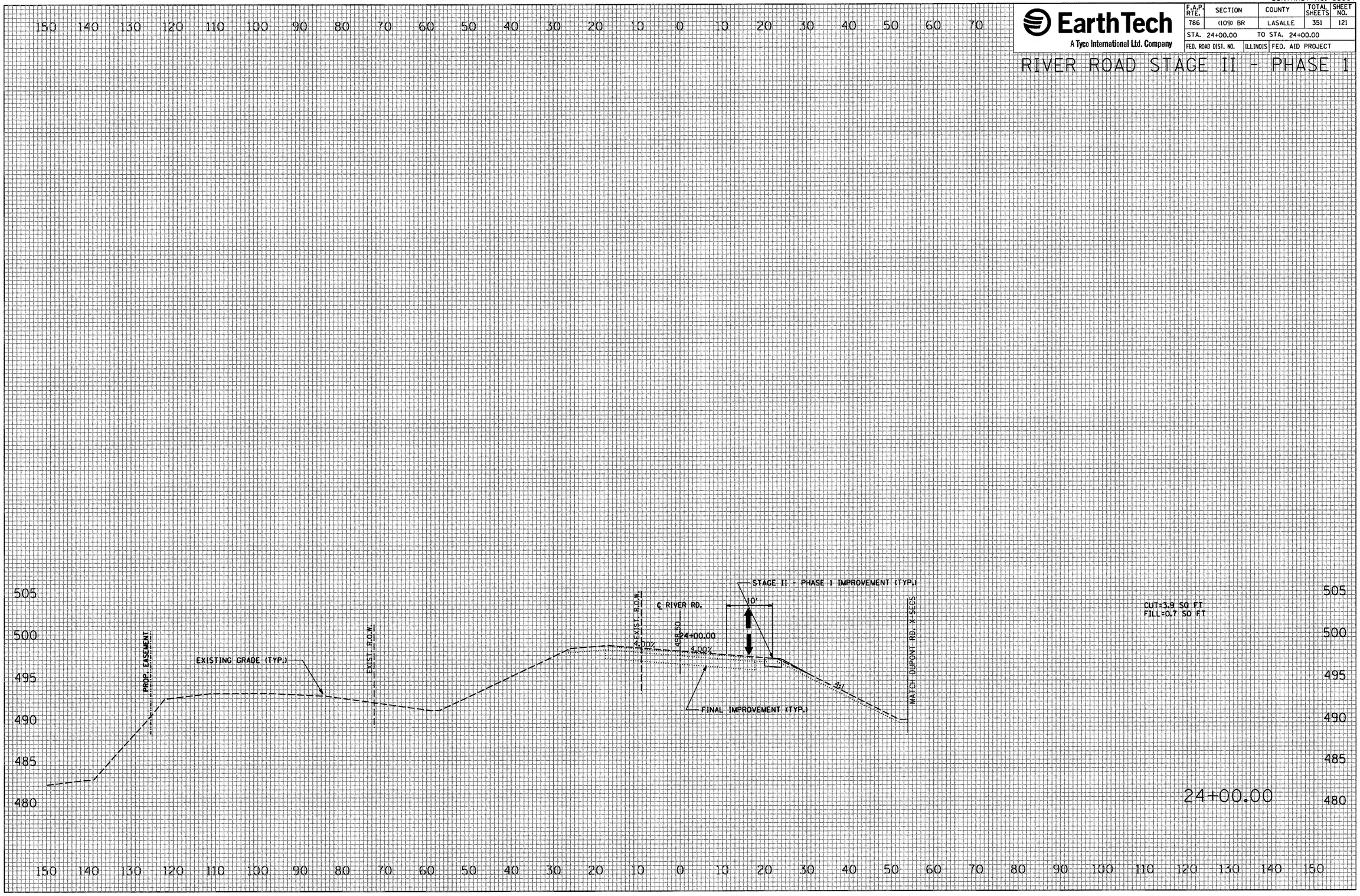

FINAL SURVEY	BY	DATE
SURVEYED		
PLOTTED		
TEMPLATE		
AREAS		
AREAS CHECKED		
NOTE BOOK		
NO.		

ORIGINAL SURVEY	BY	DATE
SURVEYED		
PLOTTED		
TEMPLATE		
AREAS		
AREAS CHECKED		
NOTE BOOK		
NO.		

PLOT DATE = 10/4/2007
FILE NAME = $FILE$
PLOT SCALE = $SCALE$
USER NAME = proj_mgt

CONTRACT NO. 66607

EarthTech
A Tyco International Ltd. Company

F.A.P. RTE.	SECTION	COUNTY	TOTAL SHEETS	SHEET NO.
786	(109) BR	LASALLE	351	122
STA. 62+41.06		TO STA. 65+00.00		
FED. ROAD DIST. NO.	ILLINOIS	FED. AID PROJECT		

ILLINOIS ROUTE 170 NORTH STAGE II - PHASE 2

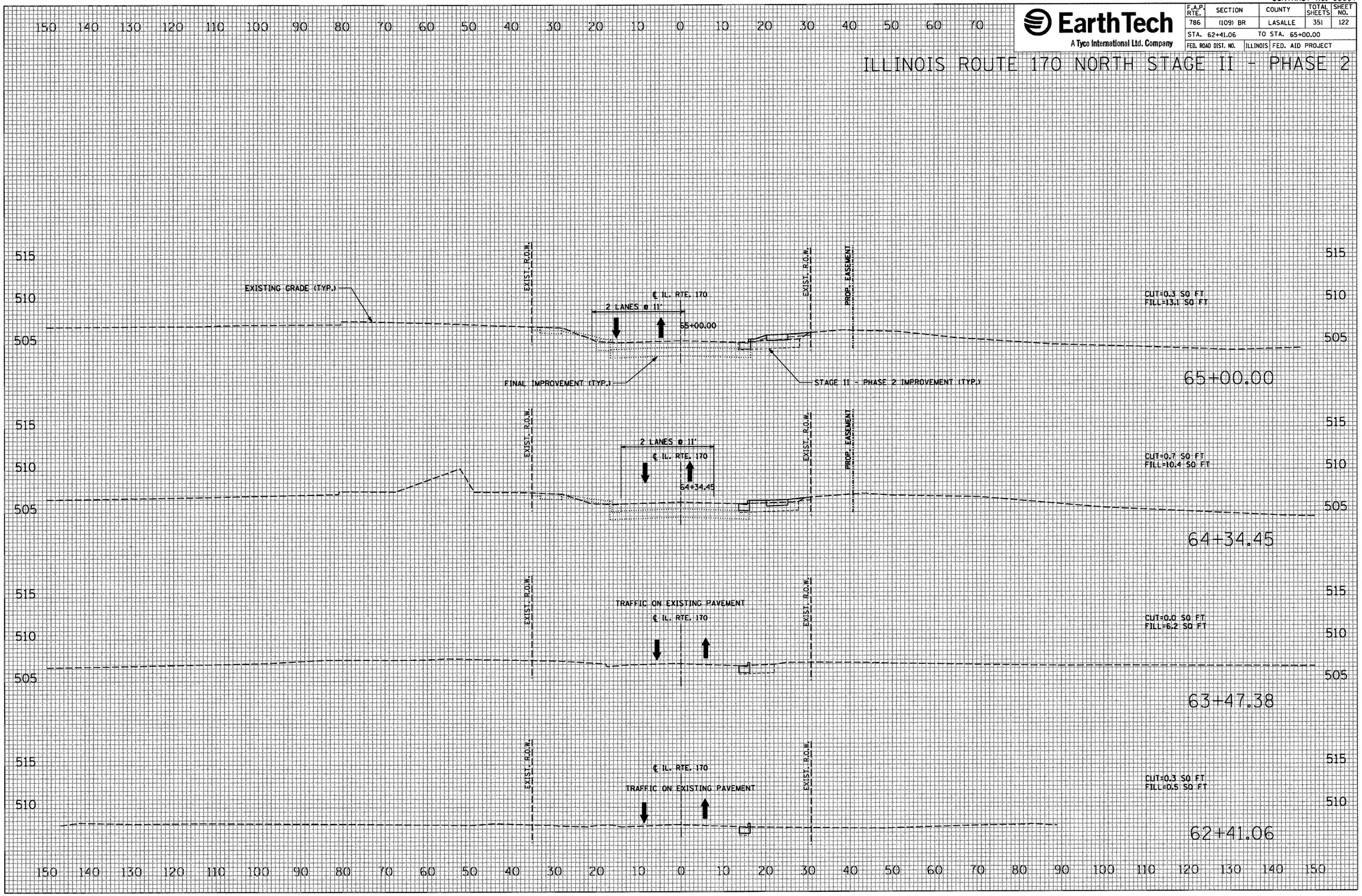

FINAL SURVEY		BY	DATE
NOTE BOOK	SURVEYED		
	PLOTTED		
	TEMPLATE		
	AREAS		
NO.	AREAS CHECKED		

ORIGINAL SURVEY		BY	DATE
NOTE BOOK	SURVEYED		
	PLOTTED		
	TEMPLATE		
	AREAS		
NO.	AREAS CHECKED		

PLOT DATE = 10/4/2007
FILE NAME = $FILEL$
PLOT SCALE = $SCALE$
USER NAME = project

CONTRACT NO. 66607

EarthTech
A Tyco International Ltd. Company

F.A.P. RTE.	SECTION	COUNTY	TOTAL SHEETS	SHEET NO.
786	(109) BR	LASALLE	351	123
STA. 65+65.91		TO STA. 67+13.32		
FED. ROAD DIST. NO.	ILLINOIS	FED. AID PROJECT		

ILLINOIS ROUTE 170 NORTH STAGE II - PHASE 2

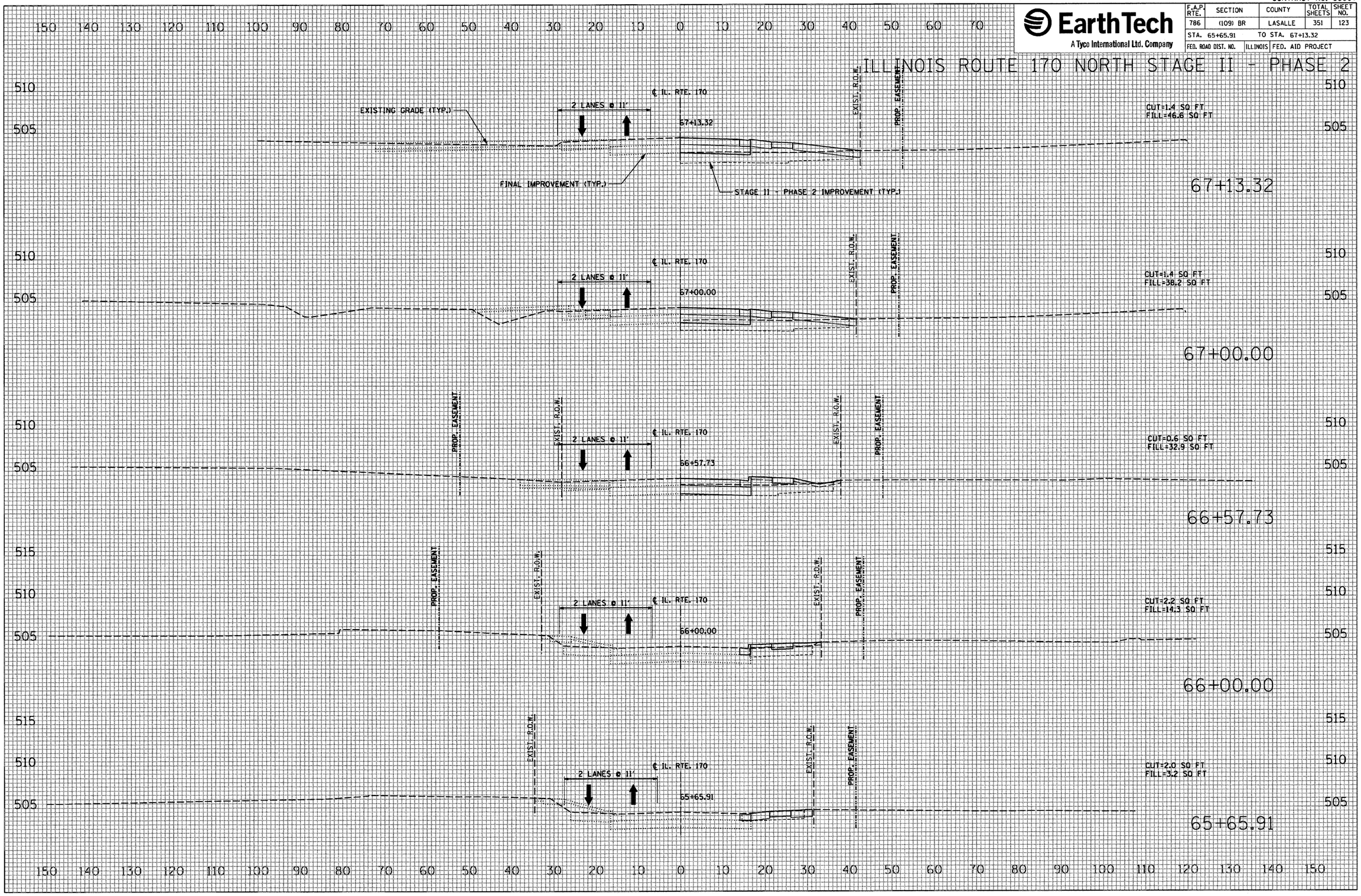

FINAL SURVEY | NOTE BOOK NO. | SURVEYED | PLOTTED | TEMPLATE | AREAS | AREAS CHECKED | BY | DATE

ORIGINAL SURVEY | NOTE BOOK NO. | SURVEYED | PLOTTED | TEMPLATE | AREAS | AREAS CHECKED | BY | DATE

PLOT DATE = 10/4/2007
FILE NAME = $FILEL$
PLOT SCALE = $SCALE$
USER NAME = project

CONTRACT NO. 66607

F.A.P. RTE.	SECTION	COUNTY	TOTAL SHEETS	SHEET NO.
786	(109) BR	LASALLE	351	124
STA. 67+62.59		TO STA. 68+98.37		
FED. ROAD DIST. NO.	ILLINOIS	FED. AID PROJECT		

EarthTech
A Tyco International Ltd. Company

ILLINOIS ROUTE 170 NORTH STAGE II - PHASE 2

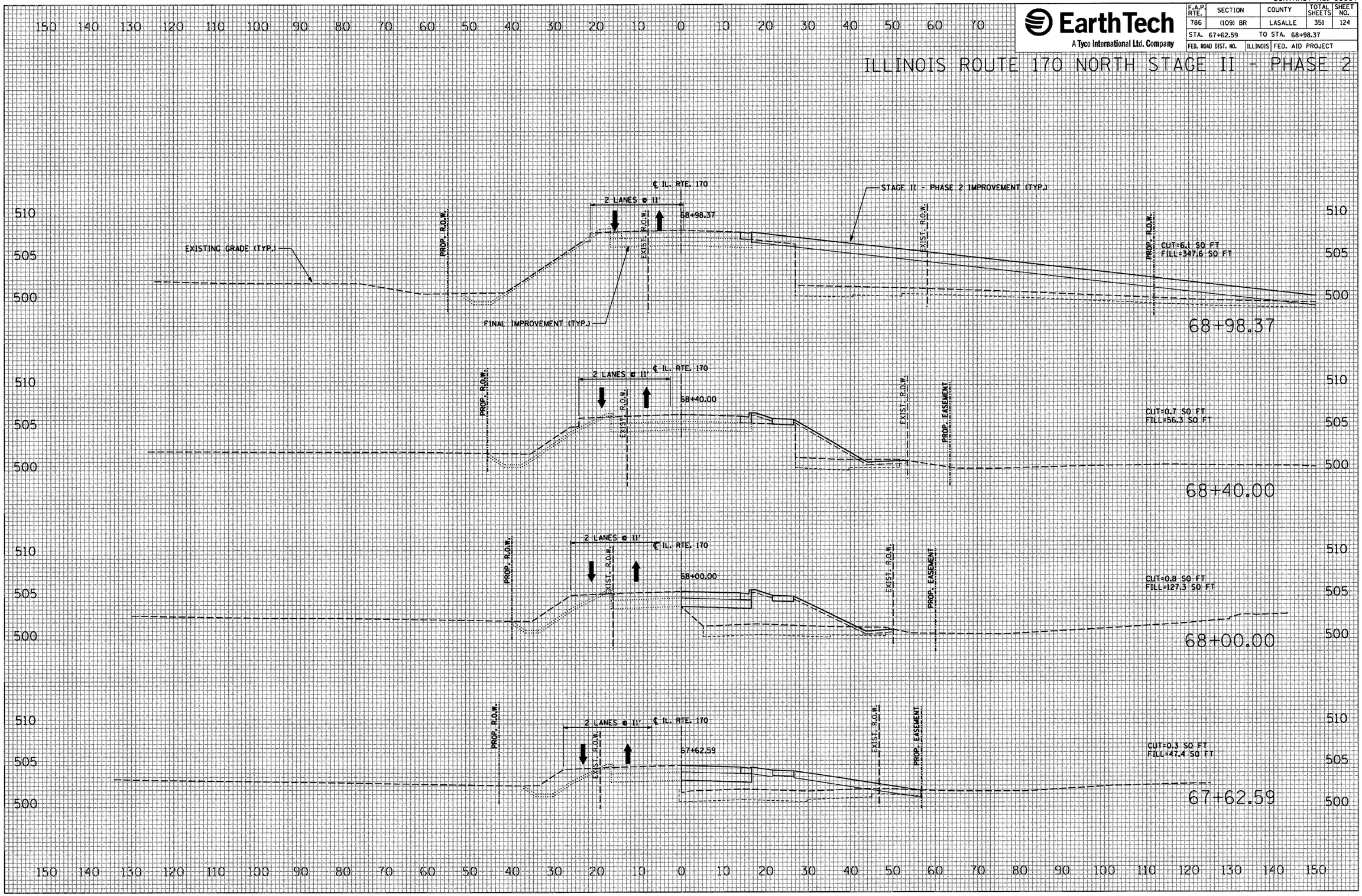

FINAL SURVEY	BY	DATE
SURVEYED		
PLOTTED		
TEMPLATE		
AREAS		
AREAS CHECKED		
NOTE BOOK		
NO.		

ORIGINAL SURVEY	BY	DATE
SURVEYED		
PLOTTED		
TEMPLATE		
AREAS		
AREAS CHECKED		
NOTE BOOK		
NO.		

PLOT DATE = 10/4/2007
FILE NAME = $FILE$
PLOT SCALE = $SCALE$
USER NAME = project

CONTRACT NO. 66607

EarthTech
A Tyco International Ltd. Company

F.A.P. RTE.	SECTION	COUNTY	TOTAL SHEETS	SHEET NO.
786	(109) BR	LASALLE	351	125
STA. 69+00.00		TO STA. 70+00.00		
FED. ROAD DIST. NO.	ILLINOIS	FED. AID PROJECT		

ILLINOIS ROUTE 170 NORTH STAGE II - PHASE 2

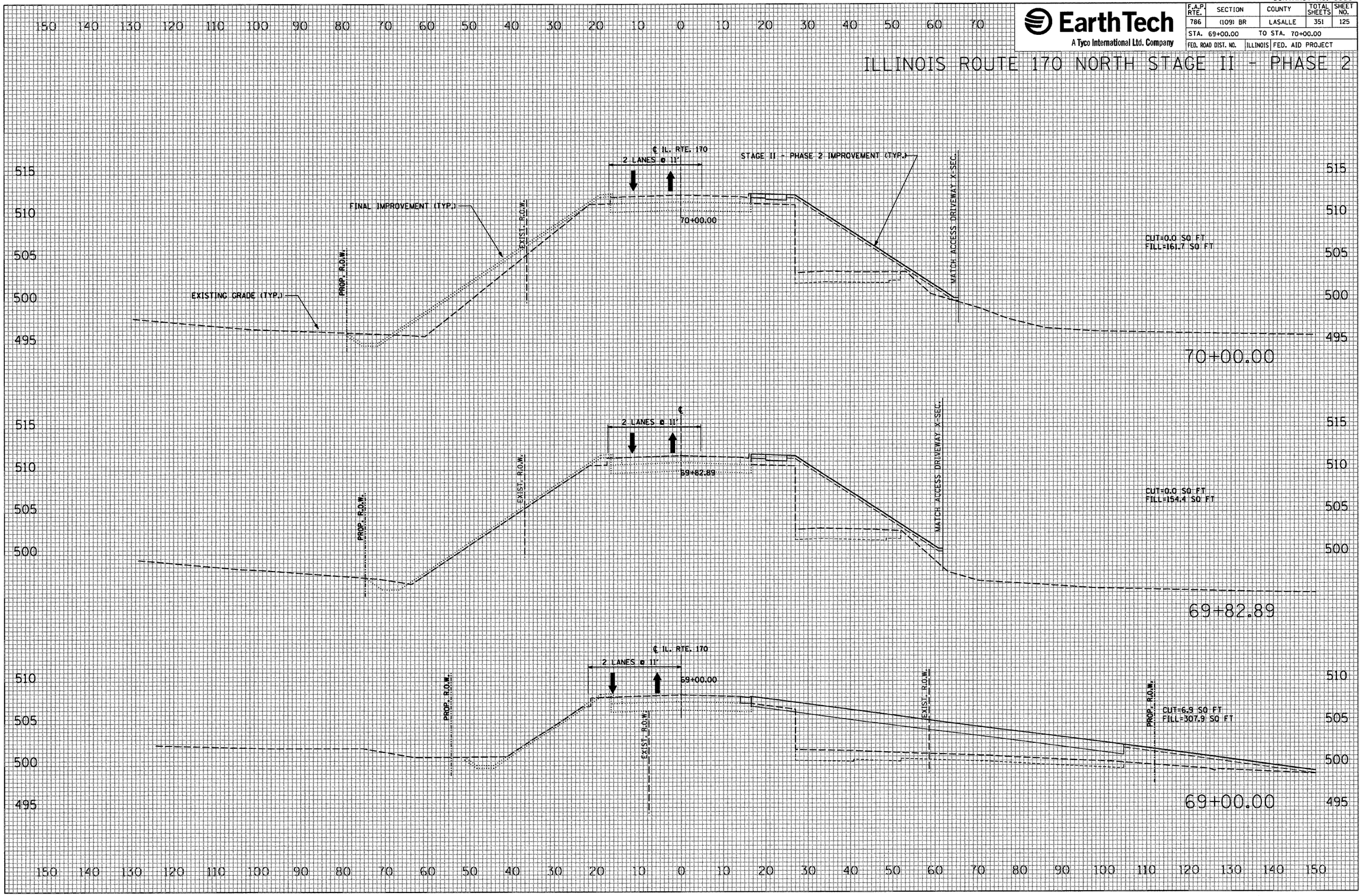

FINAL SURVEY	BY	DATE
SURVEYED		
PLOTTED		
TEMPLATE		
AREAS		
AREAS CHECKED		
NOTE BOOK NO.		

ORIGINAL SURVEY	BY	DATE
SURVEYED		
PLOTTED		
TEMPLATE		
AREAS		
AREAS CHECKED		
NOTE BOOK NO.		

PLOT DATE = 10/4/2007
FILE NAME = $FILEL$
PLOT SCALE = $SCALE$
USER NAME = project

CONTRACT NO. 66607

EarthTech
A Tyco International Ltd. Company

F.A.P. RTE.	SECTION	COUNTY	TOTAL SHEETS	SHEET NO.
786	(109) BR	LASALLE	351	126
STA. 70+83.74		TO STA. 71+00.00		
FED. ROAD DIST. NO.	ILLINOIS	FED. AID PROJECT		

ILLINOIS ROUTE 170 NORTH STAGE II - PHASE 2

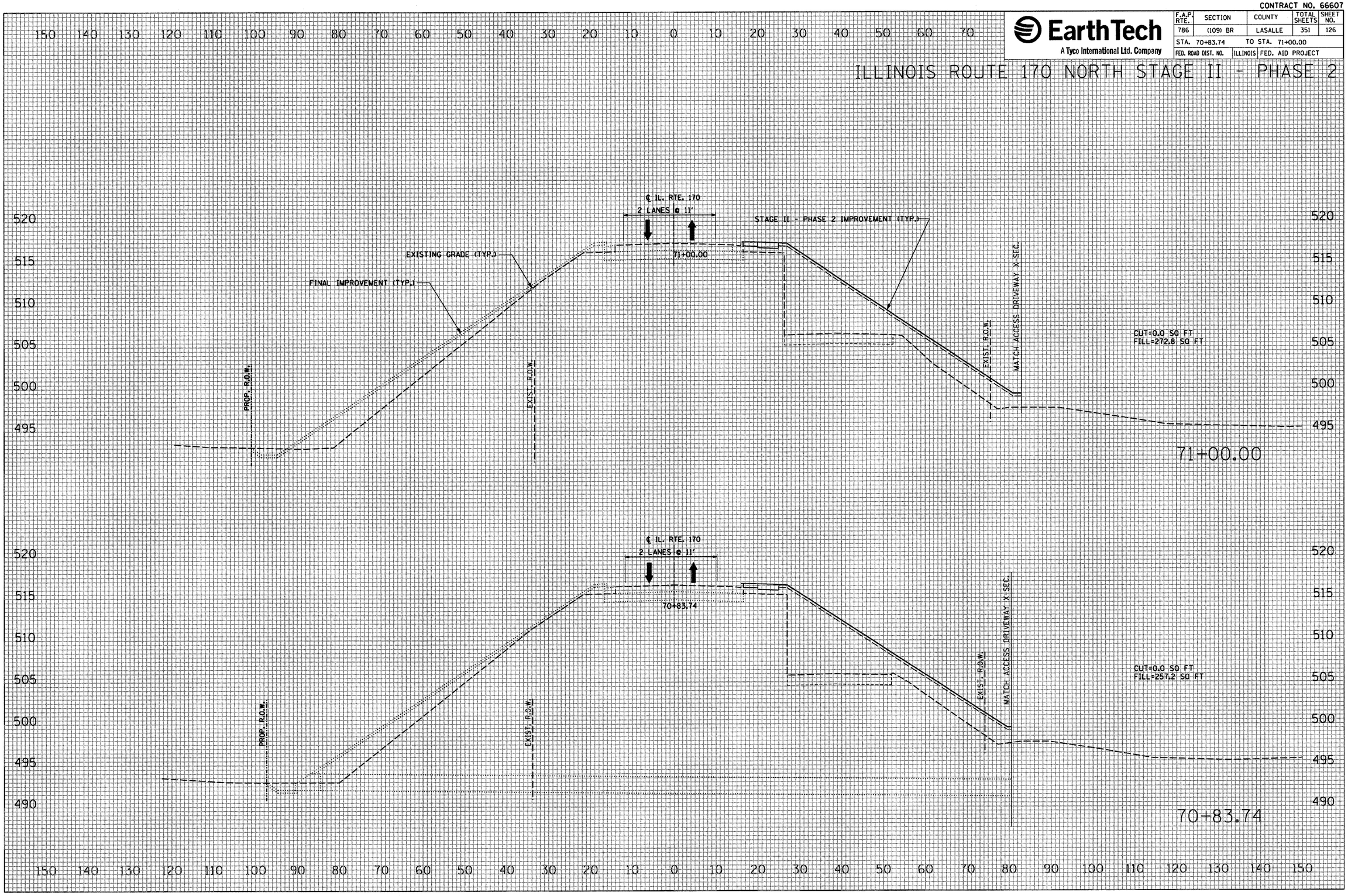

FINAL SURVEY		BY	DATE
	SURVEYED		
	PLOTTED		
	TEMPLATE		
NOTE BOOK	AREAS		
NO.	AREAS CHECKED		

ORIGINAL SURVEY		BY	DATE
	SURVEYED		
	PLOTTED		
	TEMPLATE		
NOTE BOOK	AREAS		
NO.	AREAS CHECKED		

PLOT DATE = 10/4/2007
FILE NAME = $FILE$
PLOT SCALE = $SCALE$
USER NAME = project

CONTRACT NO. 66607

EarthTech
A Tyco International Ltd. Company

F.A.P. RTE.	SECTION	COUNTY	TOTAL SHEETS	SHEET NO.
786	(109) BR	LASALLE	351	127
STA. 71+64.00		TO STA. 71+98.67		
FED. ROAD DIST. NO.		ILLINOIS	FED. AID PROJECT	

ILLINOIS ROUTE 170 NORTH STAGE II - PHASE 2

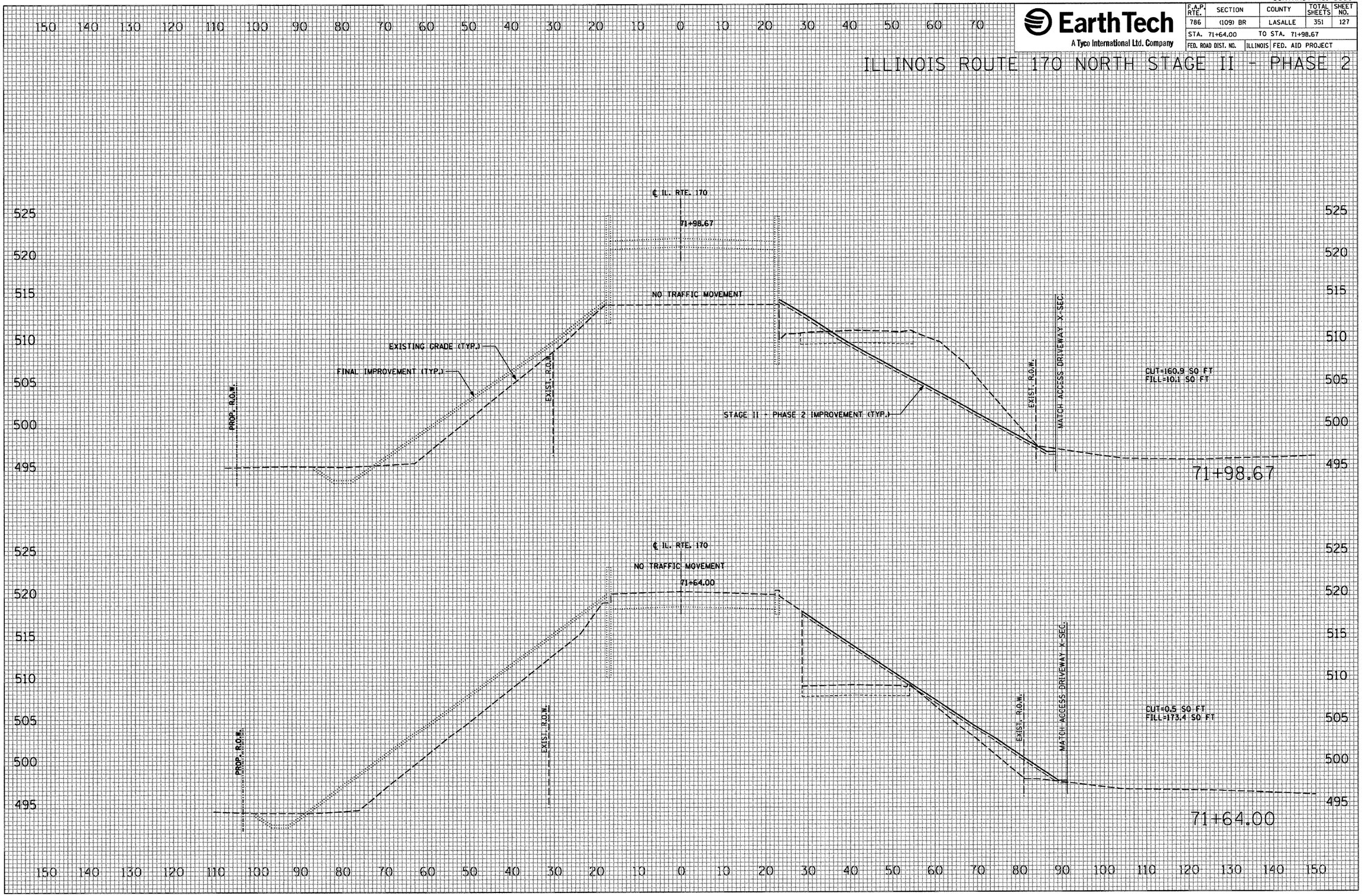

FINAL SURVEY		BY	DATE
NOTE BOOK	SURVEYED		
	PLOTTED		
	TEMPLATE		
	AREAS		
NO.	AREAS CHECKED		

ORIGINAL SURVEY		BY	DATE
NOTE BOOK	SURVEYED		
	PLOTTED		
	TEMPLATE		
	AREAS		
NO.	AREAS CHECKED		

PLOT DATE = 10/4/2007
FILE NAME = $FILEL$
PLOT SCALE = $SCALE$
USER NAME = proj$ct

CONTRACT NO. 66607

EarthTech
A Tyco International Ltd. Company

F.A.P. RTE.	SECTION	COUNTY	TOTAL SHEETS	SHEET NO.
786	(109) BR	LASALLE	351	128
STA. 72+00.00		TO STA. 73+00.00		
FED. ROAD DIST. NO.	ILLINOIS	FED. AID PROJECT		

ILLINOIS ROUTE 170 NORTH STAGE II - PHASE 2

FINAL SURVEY		BY	DATE
NOTE BOOK	SURVEYED		
	PLOTTED		
	TEMPLATE		
	AREAS		
NO.	AREAS CHECKED		

ORIGINAL SURVEY		BY	DATE
NOTE BOOK	SURVEYED		
	PLOTTED		
	TEMPLATE		
	AREAS		
NO.	AREAS CHECKED		

EARTHWORK VOLUMES
FROM STA.72+00 TO STA. 76+50
CALCULATED MANUALLY

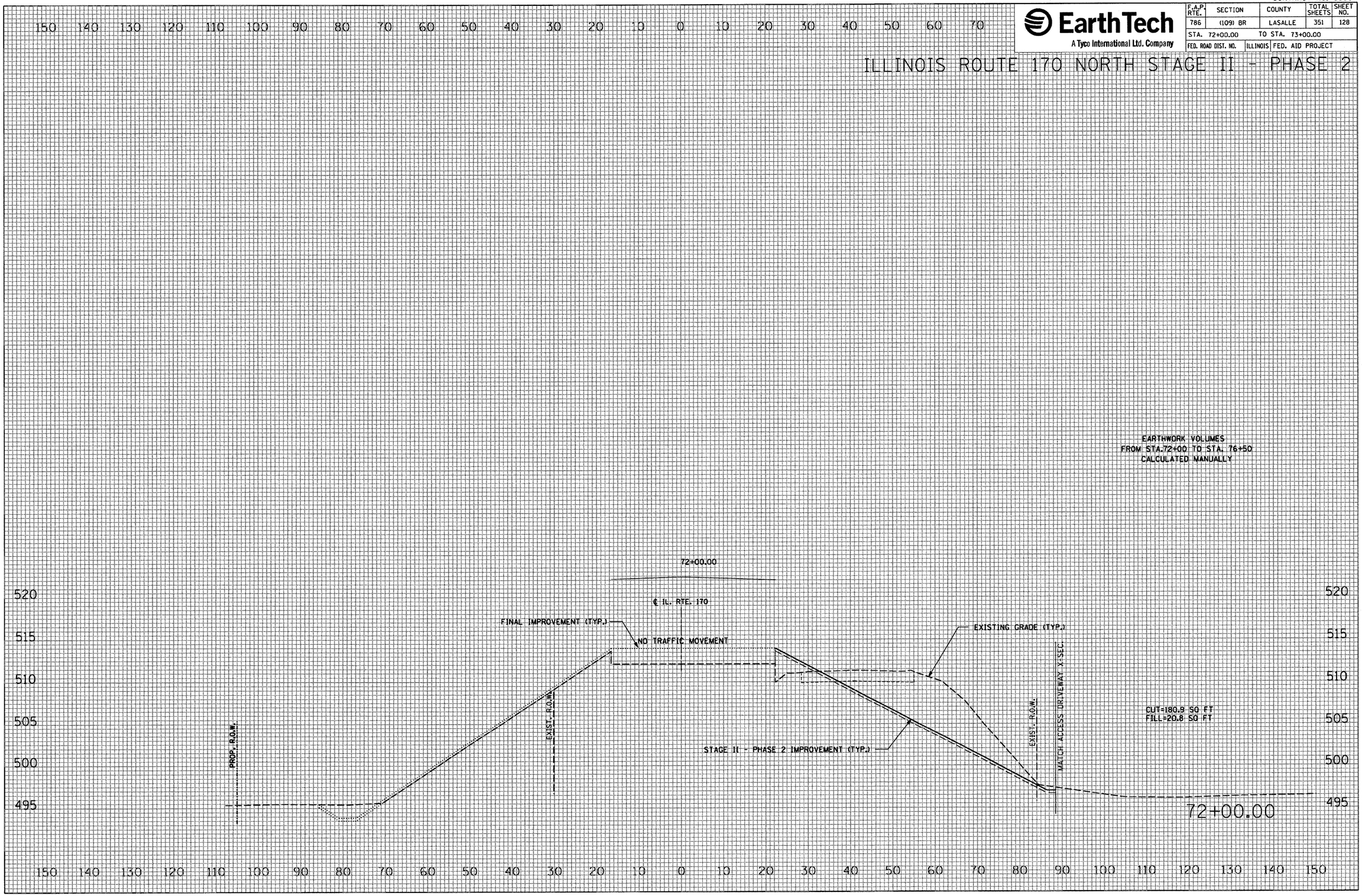

PLOT DATE = 10/4/2007
FILE NAME = $FILE$
PLOT SCALE = $SCALE$
USER NAME = pro_pect

CONTRACT NO. 66607

EarthTech
A Tyco International Ltd. Company

F.A.P. RTE.	SECTION	COUNTY	TOTAL SHEETS	SHEET NO.
786	(109) BR	LASALLE	351	129
STA. 1+50.00		TO STA. 1+91.88		
FED. ROAD DIST. NO.	ILLINOIS	FED. AID PROJECT		

ACCESS DRIVEWAY STAGE II - PHASE 2

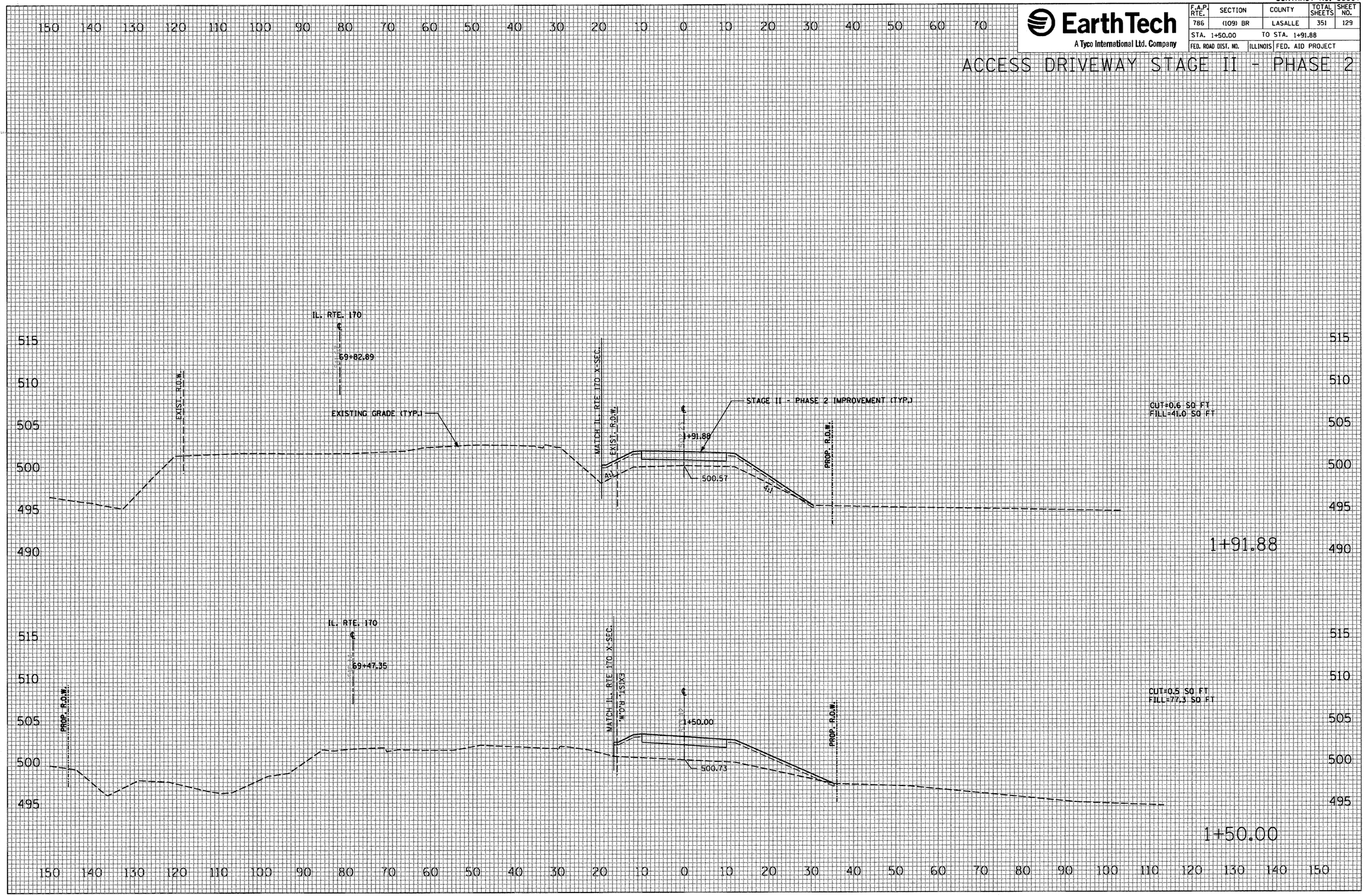

FINAL SURVEY		BY	DATE
	SURVEYED		
	PLOTTED		
NOTE BOOK	TEMPLATE		
	AREAS		
NO.	AREAS CHECKED		

ORIGINAL SURVEY		BY	DATE
	SURVEYED		
	PLOTTED		
NOTE BOOK	TEMPLATE		
	AREAS		
NO.	AREAS CHECKED		

PLOT DATE = 10/4/2007
FILE NAME = $FILEL$
PLOT SCALE = $SCALE$
USER NAME = project

CONTRACT NO. 66607

F.A.P. RTE.	SECTION	COUNTY	TOTAL SHEETS	SHEET NO.
786	(109) BR	LASALLE	351	130
STA. 2+00.00		TO STA. 2+15.42		
FED. ROAD DIST. NO.	ILLINOIS	FED. AID PROJECT		

EarthTech
A Tyco International Ltd. Company

ACCESS DRIVEWAY STAGE II - PHASE 2

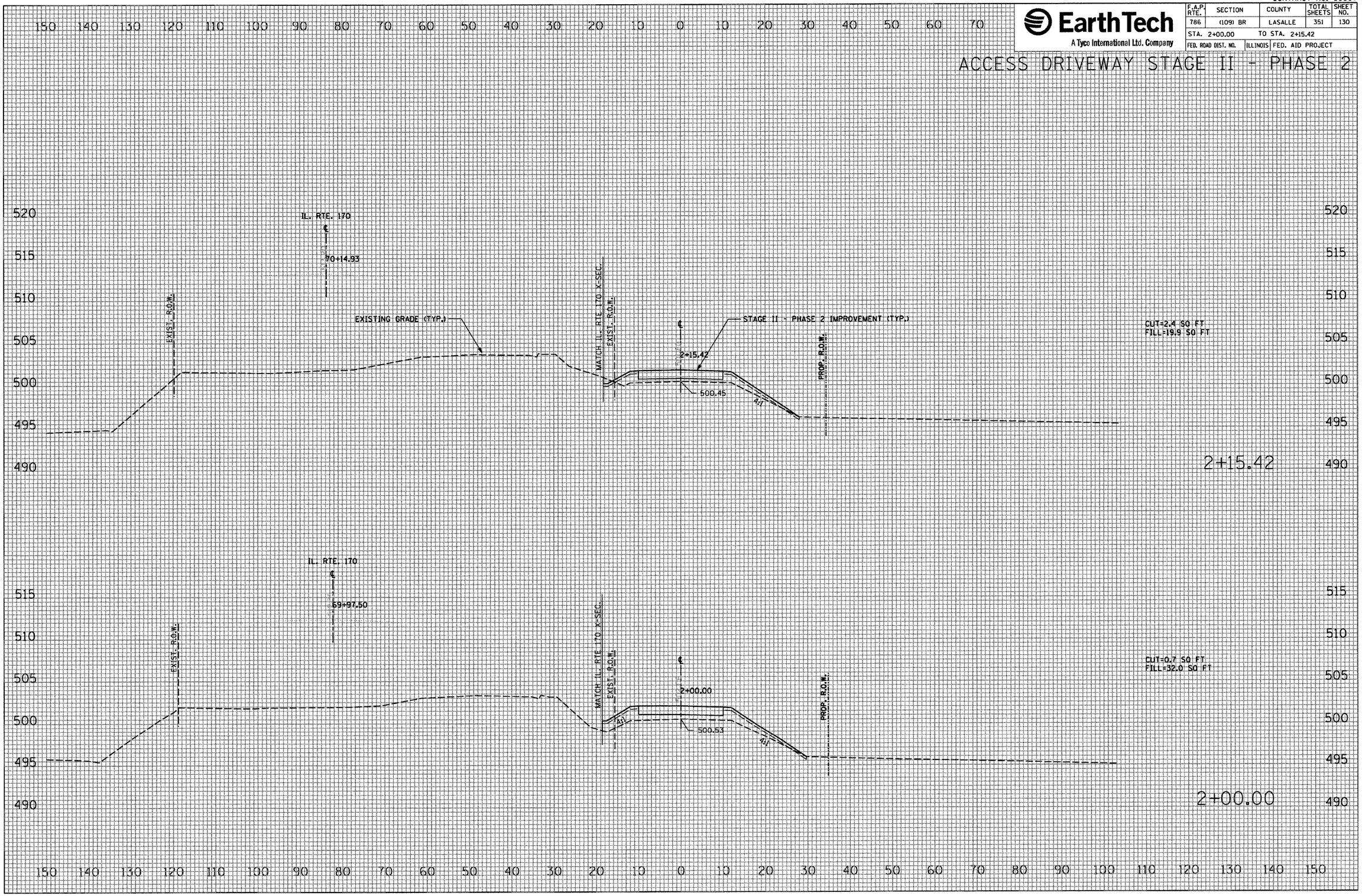

FINAL SURVEY	BY	DATE
SURVEYED		
PLOTTED		
TEMPLATE		
AREAS		
AREAS CHECKED		
NOTE BOOK NO.		

ORIGINAL SURVEY	BY	DATE
SURVEYED		
PLOTTED		
TEMPLATE		
AREAS		
AREAS CHECKED		
NOTE BOOK NO.		

PLOT DATE = 10/4/2007
FILE NAME = $FILEL$
PLOT SCALE = $SCALE$
USER NAME = proj_mct

CONTRACT NO. 66607

EarthTech
A Tyco International Ltd. Company

F.A.P. RTE.	SECTION	COUNTY	TOTAL SHEETS	SHEET NO.
786	(109) BR	LASALLE	351	131
STA. 2+94.22		TO STA. 3+00.00		
FED. ROAD DIST. NO.	ILLINOIS	FED. AID PROJECT		

ACCESS DRIVEWAY STAGE II - PHASE 2

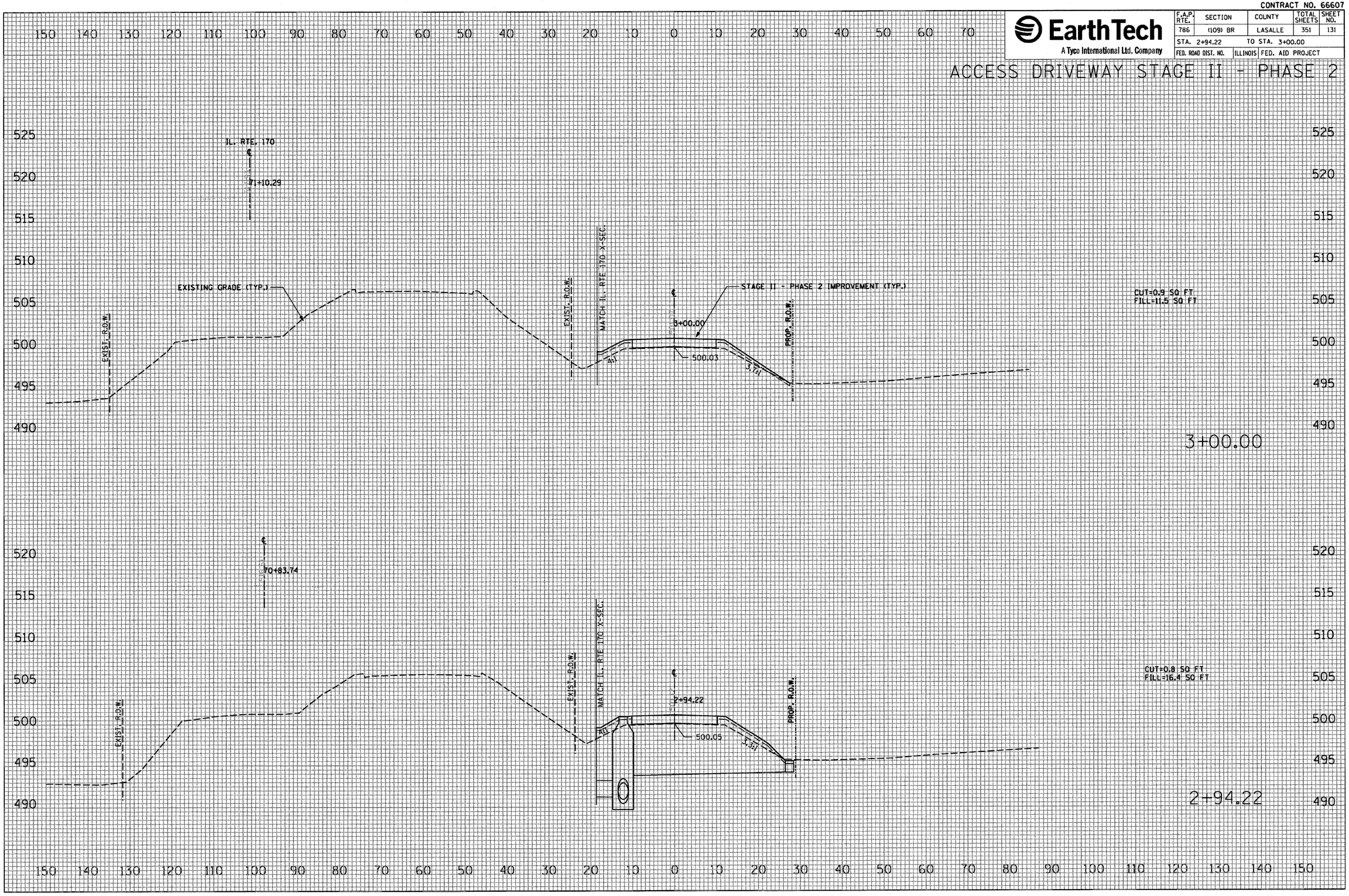

FINAL SURVEY		BY	DATE
	SURVEYED		
	PLOTTED		
NOTE BOOK	TEMPLATE		
	AREAS		
NO.	AREAS CHECKED		

ORIGINAL SURVEY		BY	DATE
	SURVEYED		
	PLOTTED		
NOTE BOOK	TEMPLATE		
	AREAS		
NO.	AREAS CHECKED		

PLOT DATE = 10/1/2007
FILE NAME = $FILEL$
PLOT SCALE = $SCALE$
USER NAME = project

CONTRACT NO. 66607

EarthTech
A Tyco International Ltd. Company

F.A.P. RTE.	SECTION	COUNTY	TOTAL SHEETS	SHEET NO.
786	(109) BR	LASALLE	351	132
STA. 3+55.00		TO STA. 4+00.00		
FED. ROAD DIST. NO.	ILLINOIS	FED. AID PROJECT		

ACCESS DRIVEWAY STAGE II - PHASE 2

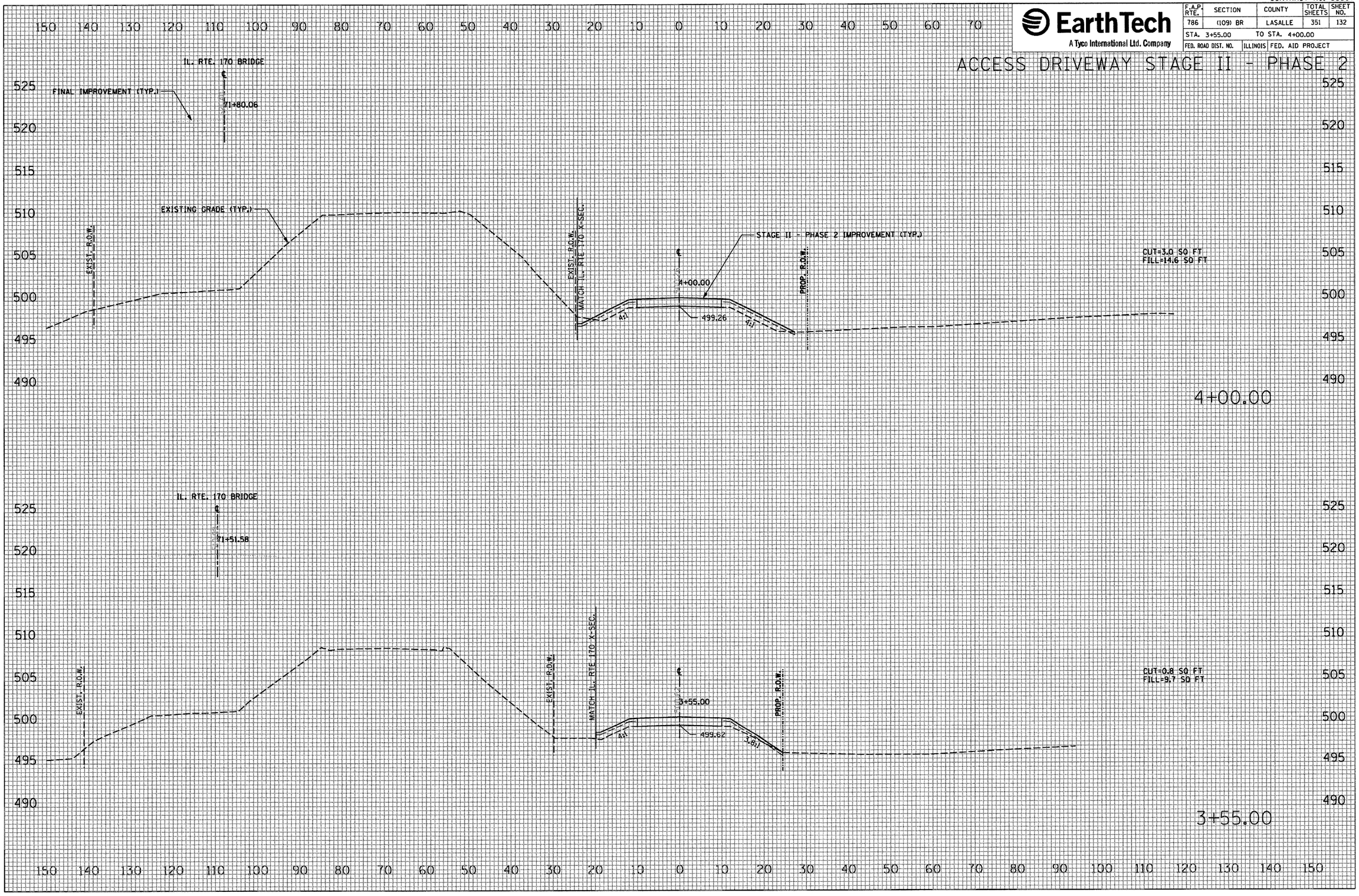

FINAL SURVEY	BY	DATE
SURVEYED		
PLOTTED		
TEMPLATE		
AREAS		
AREAS CHECKED		
NOTE BOOK		
NO.		

ORIGINAL SURVEY	BY	DATE
SURVEYED		
PLOTTED		
TEMPLATE		
AREAS		
AREAS CHECKED		
NOTE BOOK		
NO.		

PLOT DATE = 10/4/2007
FILE NAME = $FILEL$
PLOT SCALE = $SCALE$
USER NAME = project

CONTRACT NO. 66607

EarthTech
A Tyco International Ltd. Company

F.A.P. RTE.	SECTION	COUNTY	TOTAL SHEETS	SHEET NO.
786	(109) BR	LASALLE	351	133
STA. 4+61.84		TO STA. 4+61.84		
FED. ROAD DIST. NO.	ILLINOIS	FED. AID PROJECT		

ACCESS DRIVEWAY STAGE II - PHASE 2

EARTHWORK VOLUMES
FROM STA.4+61.84 TO ILLINOIS RIVER
CALCULATED MANUALLY

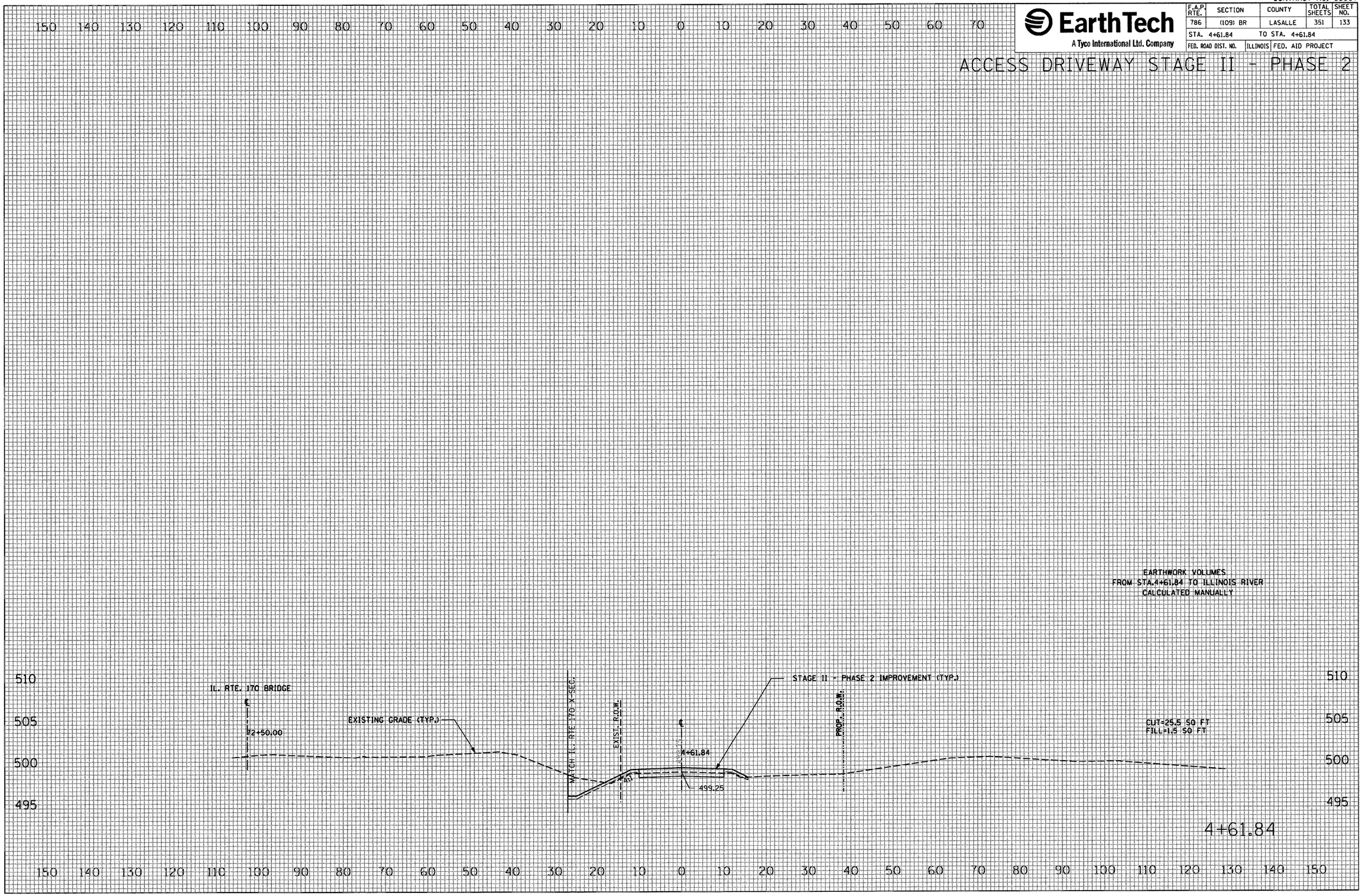

FINAL SURVEY		BY	DATE
	SURVEYED		
	PLOTTED		
	TEMPLATE		
NOTE BOOK	AREAS		
	AREAS CHECKED		
NO.			

ORIGINAL SURVEY		BY	DATE
	SURVEYED		
	PLOTTED		
	TEMPLATE		
NOTE BOOK	AREAS		
	AREAS CHECKED		
NO.			

PLOT DATE = 10/4/2007
FILE NAME = $FILEL$
PLOT SCALE = $SCALE$
USER NAME = proj.wct

CONTRACT NO. 66607

EarthTech
A Tyco International Ltd. Company

F.A.P. RTE.	SECTION	COUNTY	TOTAL SHEETS	SHEET NO.
786	(109) BR	LASALLE	351	134
STA. 88+92.51		TO STA. 95+00.00		
FED. ROAD DIST. NO.	ILLINOIS	FED. AID PROJECT		

ILLINOIS ROUTE 170 SOUTH STAGE II - PHASE 2

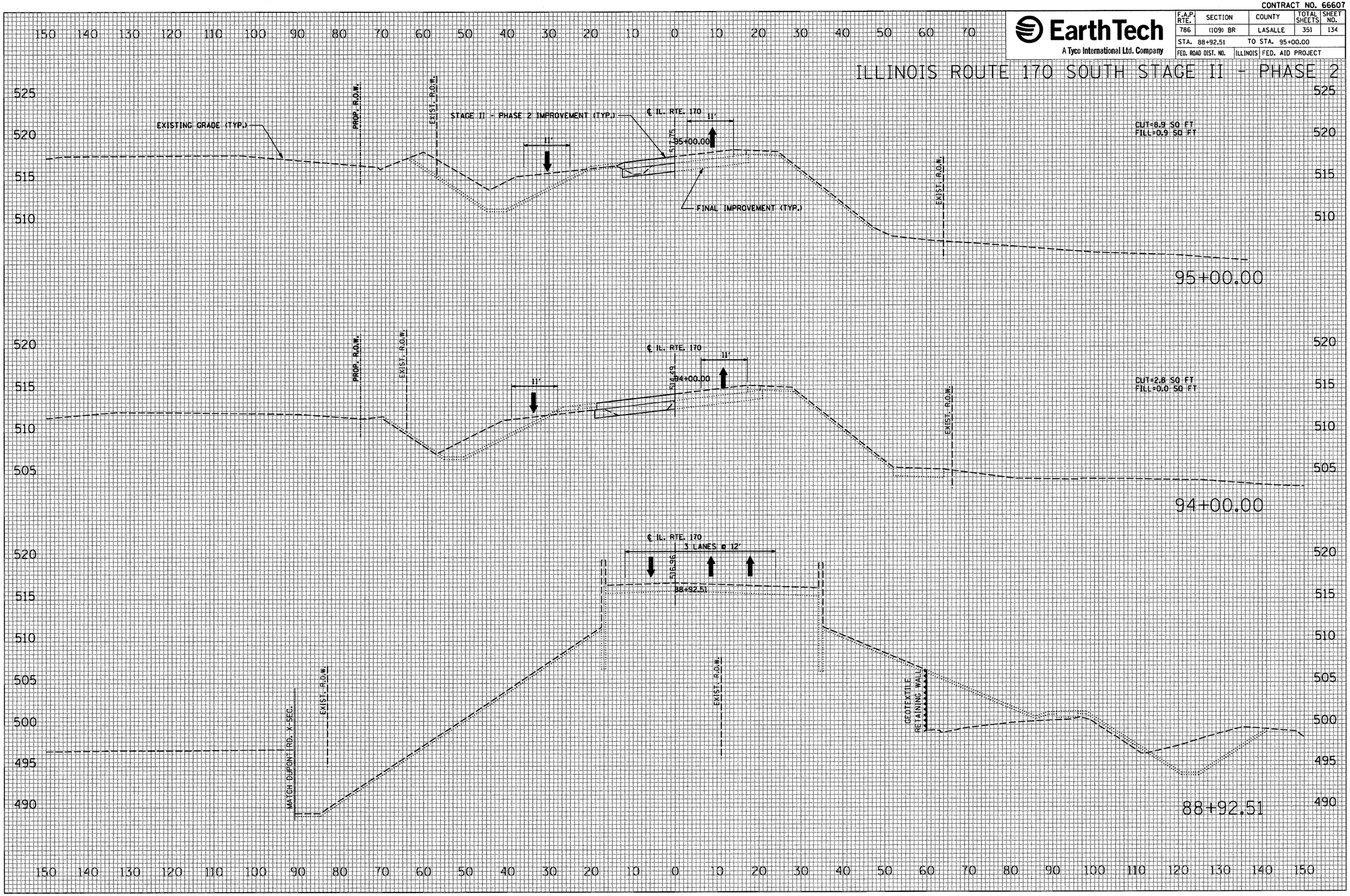

FINAL SURVEY | NOTE BOOK NO. | SURVEYED | PLOTTED | TEMPLATE | AREAS | AREAS CHECKED | BY | DATE

ORIGINAL SURVEY | NOTE BOOK NO. | SURVEYED | PLOTTED | TEMPLATE | AREAS | AREAS CHECKED | BY | DATE

PLOT DATE = 10/4/2007
FILE NAME = $FILEL$
PLOT SCALE = $SCALE$
USER NAME = project

CONTRACT NO. 66607

F.A.P. RTE.	SECTION	COUNTY	TOTAL SHEETS	SHEET NO.
786	(109) BR	LASALLE	351	135
STA. 96+00.00		TO STA. 96+50.00		
FED. ROAD DIST. NO.	ILLINOIS	FED. AID PROJECT		

EarthTech
A Tyco International Ltd. Company

ILLINOIS ROUTE 170 SOUTH STAGE II - PHASE 2

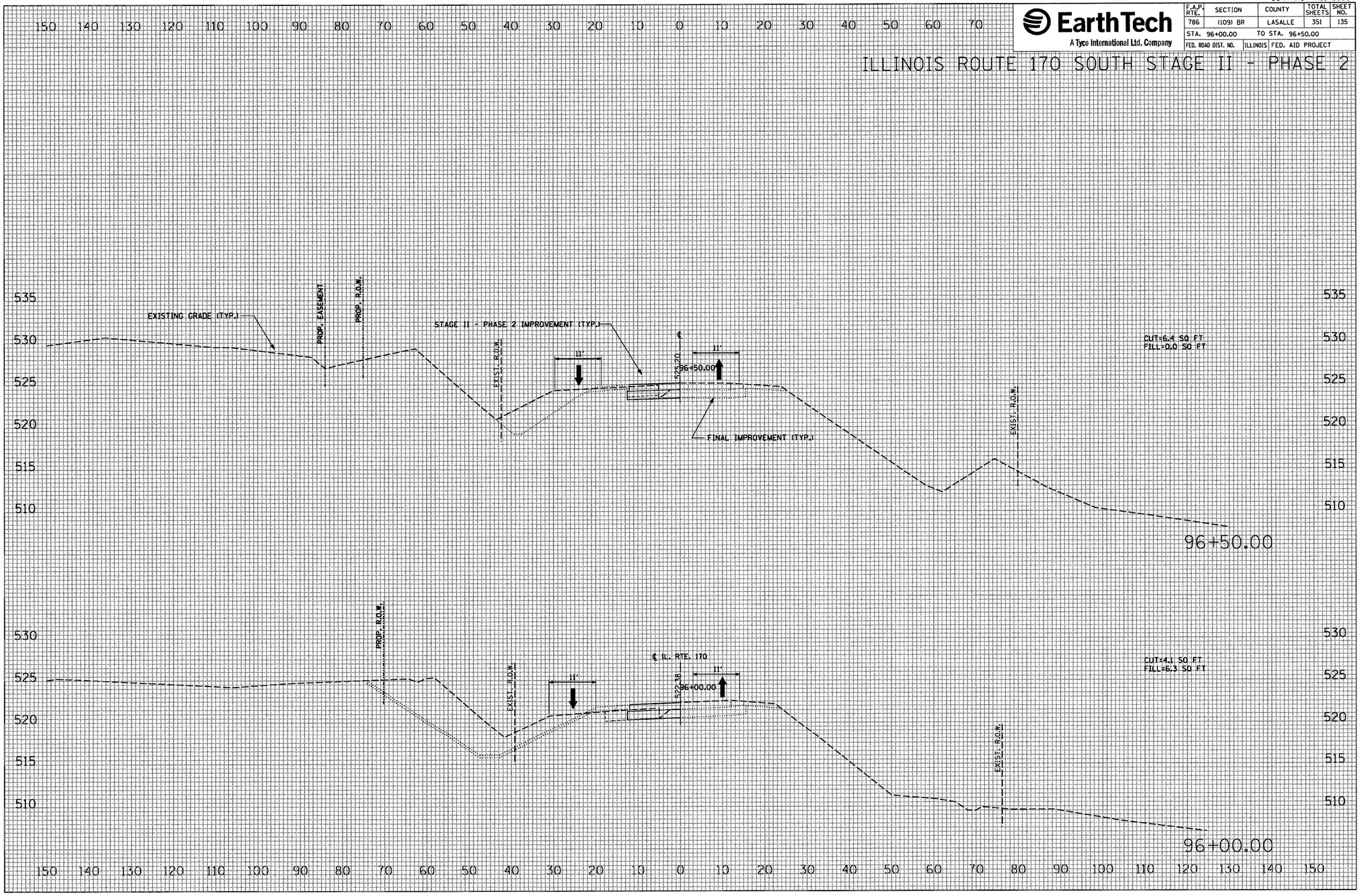

FINAL SURVEY		BY	DATE
	SURVEYED		
	PLOTTED		
NOTE BOOK	TEMPLATE		
	AREAS		
NO.	AREAS CHECKED		

ORIGINAL SURVEY		BY	DATE
	SURVEYED		
	PLOTTED		
NOTE BOOK	TEMPLATE		
	AREAS		
NO.	AREAS CHECKED		

PLOT DATE = 10/4/2007
FILE NAME = $FILE$
PLOT SCALE = $SCALE$
USER NAME = project

CONTRACT NO. 66607

EarthTech
A Tyco International Ltd. Company

F.A.P. RTE.	SECTION	COUNTY	TOTAL SHEETS	SHEET NO.
786	(109) BR	LASALLE	351	136
STA. 96+85.00		TO STA. 97+00.00		
FED. ROAD DIST. NO.	ILLINOIS	FED. AID PROJECT		

ILLINOIS ROUTE 170 SOUTH STAGE II - PHASE 2

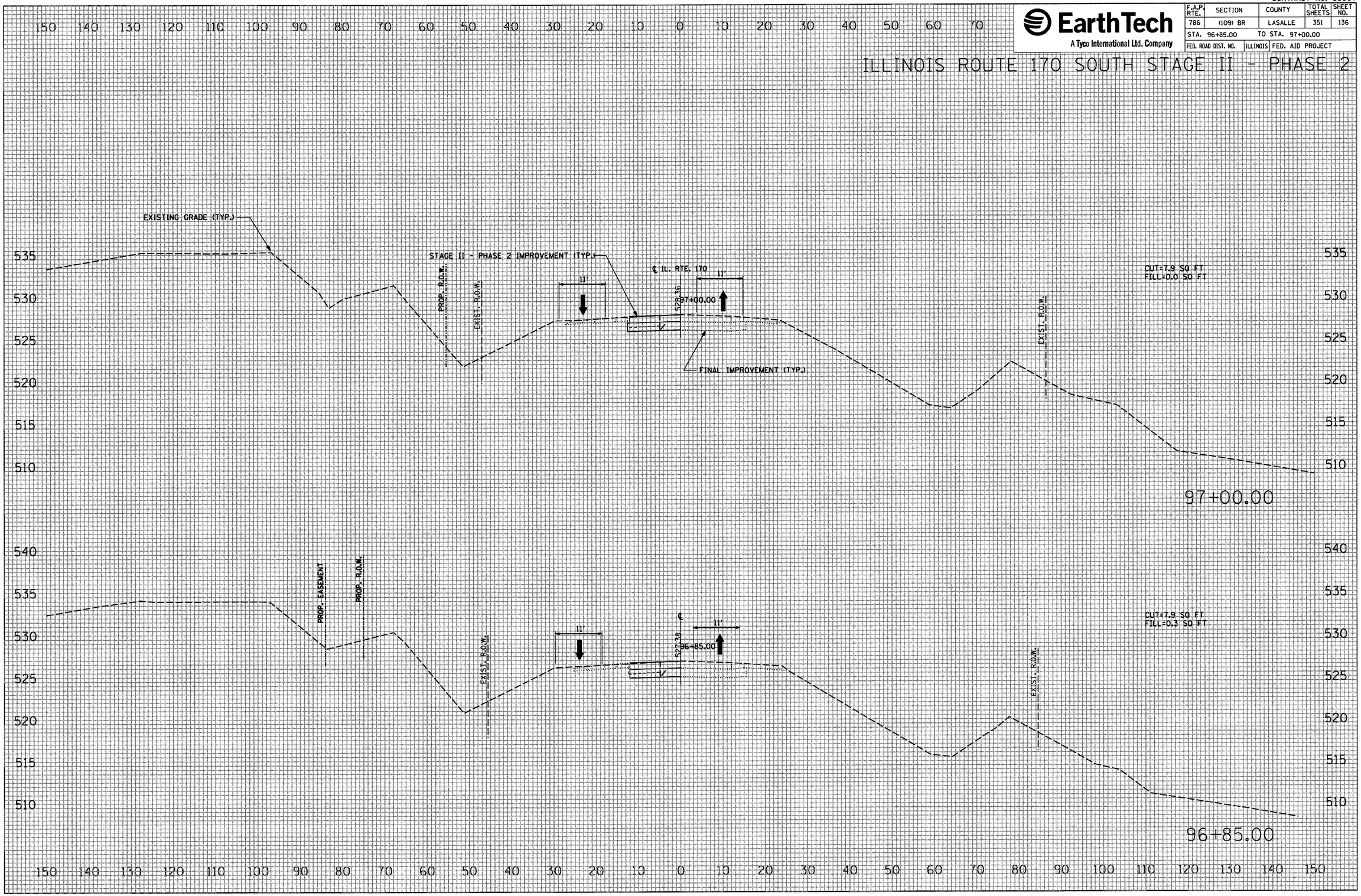

FINAL SURVEY	BY	DATE
SURVEYED		
PLOTTED		
NOTE BOOK TEMPLATE		
AREAS		
NO. AREAS CHECKED		

ORIGINAL SURVEY	BY	DATE
SURVEYED		
PLOTTED		
NOTE BOOK TEMPLATE		
AREAS		
NO. AREAS CHECKED		

PLOT DATE = 10/4/2007
FILE NAME = $FILE$
PLOT SCALE = $SCALE$
USER NAME = proj.mct

CONTRACT NO. 66607

EarthTech
A Tyco International Ltd. Company

F.A.P. RTE.	SECTION	COUNTY	TOTAL SHEETS	SHEET NO.
786	(109) BR	LASALLE	351	137
STA. 97+49.49		TO STA. 97+49.49		
FED. ROAD DIST. NO.	ILLINOIS	FED. AID PROJECT		

ILLINOIS ROUTE 170 SOUTH STAGE II - PHASE 2

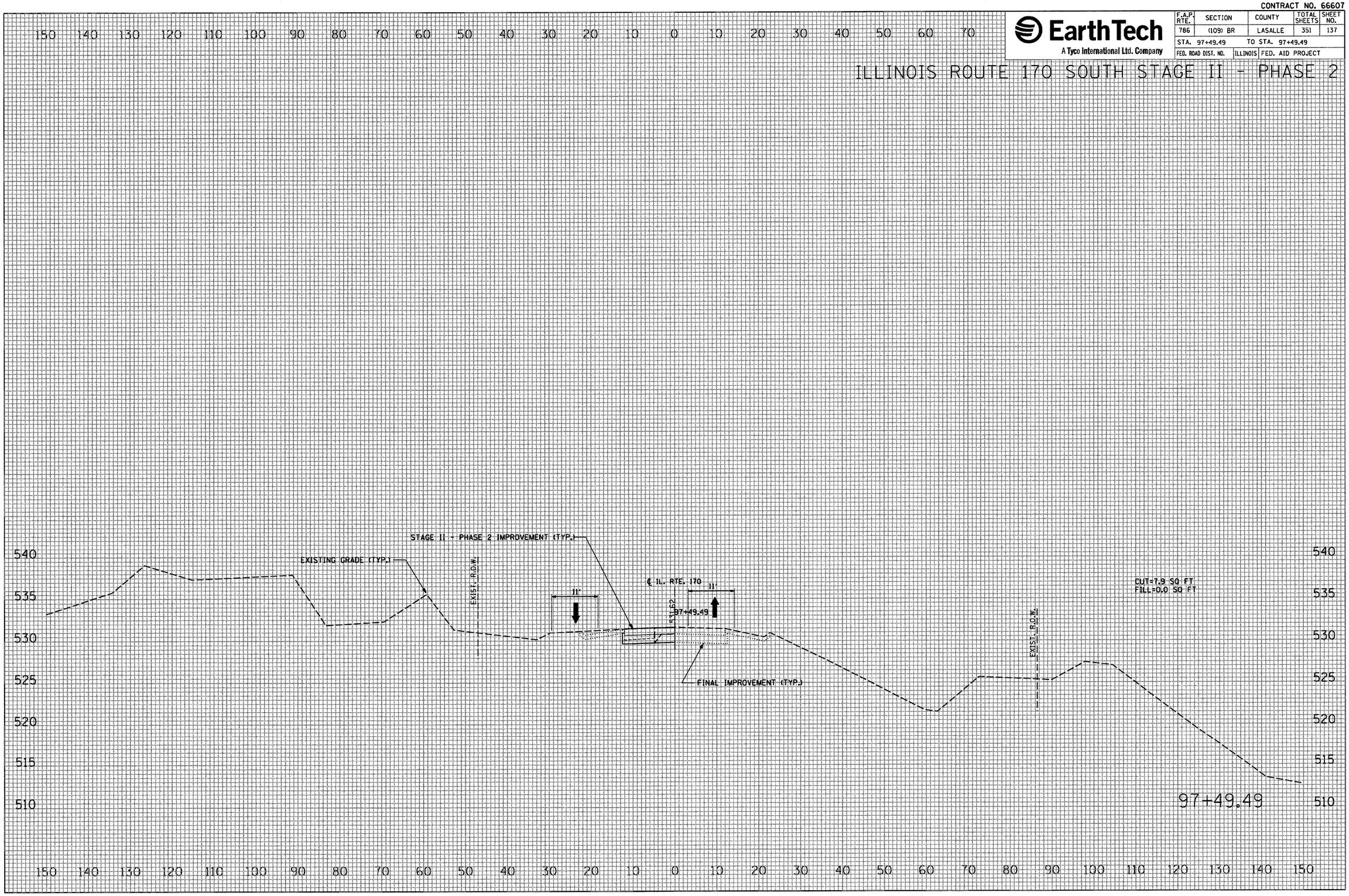

FINAL SURVEY		BY	DATE
NOTE BOOK	SURVEYED		
	PLOTTED		
	TEMPLATE		
	AREAS		
	AREAS CHECKED		
NO.			

ORIGINAL SURVEY		BY	DATE
NOTE BOOK	SURVEYED		
	PLOTTED		
	TEMPLATE		
	AREAS		
	AREAS CHECKED		
NO.			

PLOT DATE = 10/4/2007
FILE NAME = $FILE$
PLOT SCALE = $SCALE$
USER NAME = proj_mgt

CONTRACT NO. 66607

EarthTech
A Tyco International Ltd. Company

F.A.P. RTE.	SECTION	COUNTY	TOTAL SHEETS	SHEET NO.
786	(109) BR	LASALLE	351	138
STA. 17+50.00		TO STA. 18+50.00		
FED. ROAD DIST. NO.	ILLINOIS	FED. AID PROJECT		

RIVER ROAD STAGE II - PHASE 2

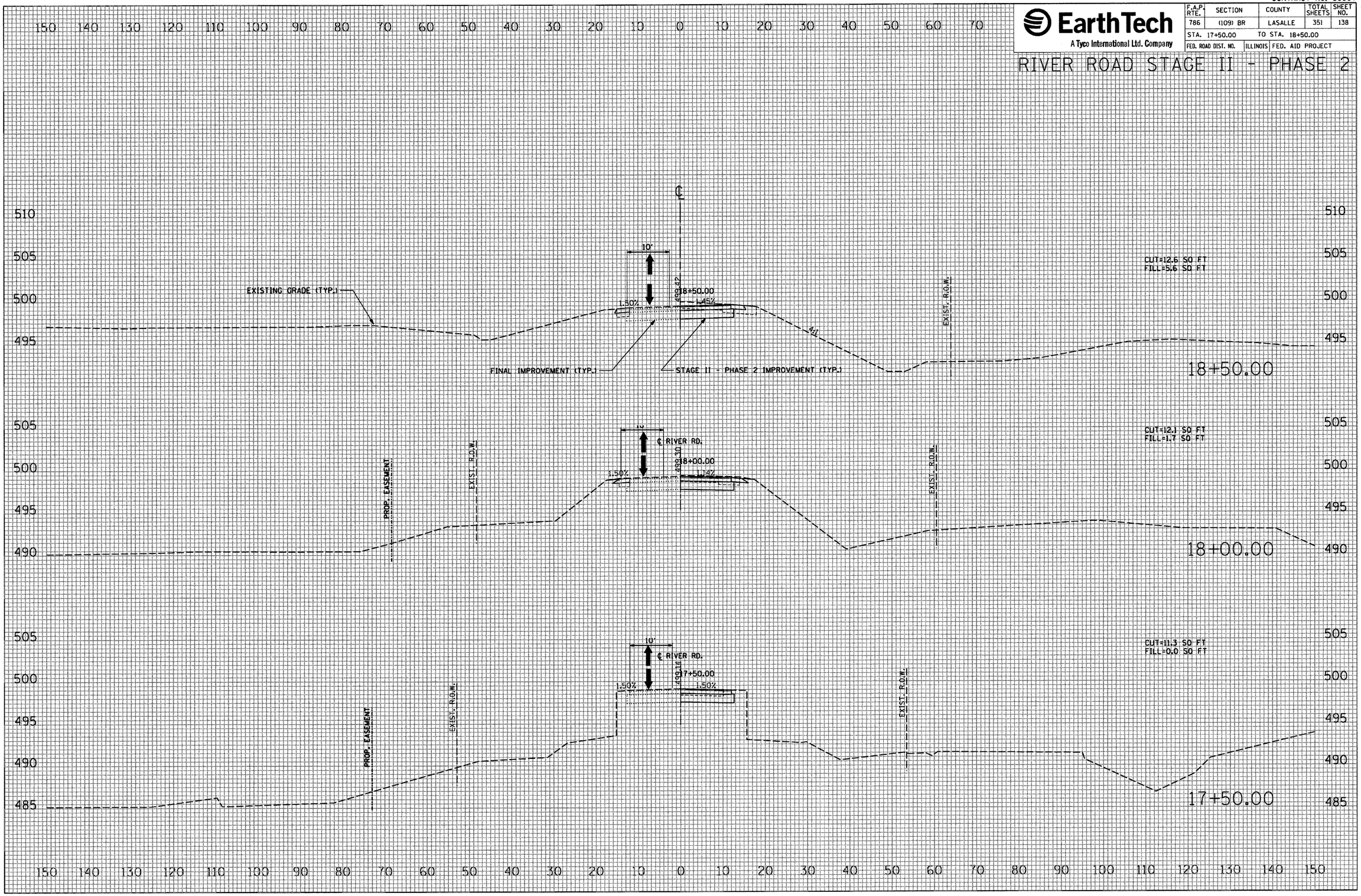

FINAL SURVEY	BY	DATE
SURVEYED		
PLOTTED		
TEMPLATE		
AREAS		
AREAS CHECKED		
NOTE BOOK NO.		

ORIGINAL SURVEY	BY	DATE
SURVEYED		
PLOTTED		
TEMPLATE		
AREAS		
AREAS CHECKED		
NOTE BOOK NO.		

PLOT DATE = 10/4/2007
FILE NAME = $FILE$
PLOT SCALE = $SCALE$
USER NAME = pr$user

CONTRACT NO. 66607

EarthTech
A Tyco International Ltd. Company

F.A.P. RTE.	SECTION	COUNTY	TOTAL SHEETS	SHEET NO.
786	(109) BR	LASALLE	351	139
STA. 19+00.00		TO STA. 19+40.00		
FED. ROAD DIST. NO.	ILLINOIS	FED. AID PROJECT		

RIVER ROAD STAGE II - PHASE 2

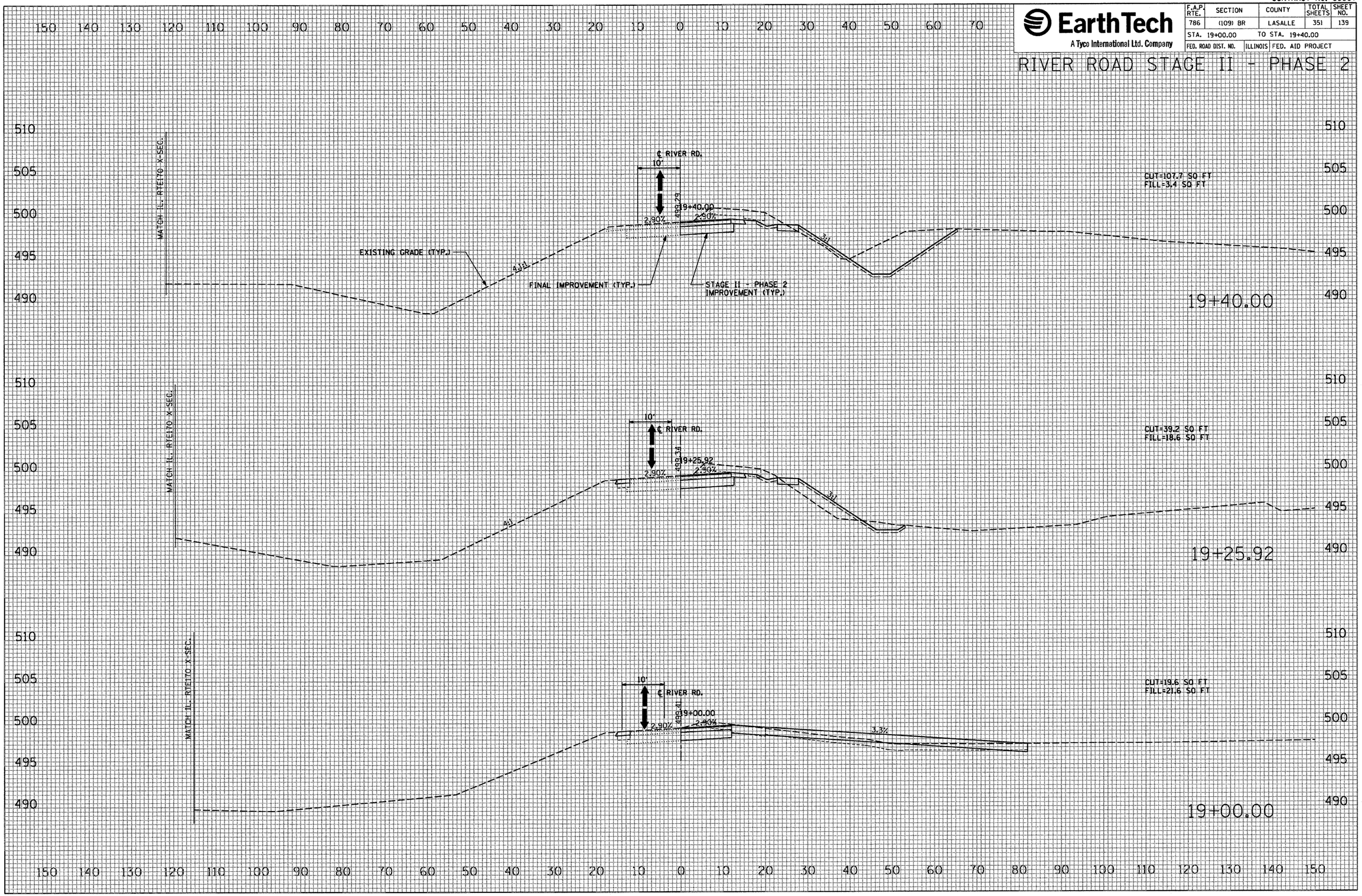

FINAL SURVEY		BY	DATE
	SURVEYED		
	PLOTTED		
	TEMPLATE		
NOTE BOOK	AREAS		
	AREAS CHECKED		
NO.			

ORIGINAL SURVEY		BY	DATE
	SURVEYED		
	PLOTTED		
	TEMPLATE		
NOTE BOOK	AREAS		
	AREAS CHECKED		
NO.			

PLOT DATE = 10/4/2007
FILE NAME = $FILEL$
PLOT SCALE = $SCALE$
USER NAME = project

CONTRACT NO. 66607

EarthTech
A Tyco International Ltd. Company

F.A.P. RTE.	SECTION	COUNTY	TOTAL SHEETS	SHEET NO.
786	(109) BR	LASALLE	351	140
STA. 19+50.00		TO STA. 20+50.00		
FED. ROAD DIST. NO.	ILLINOIS	FED. AID PROJECT		

RIVER ROAD STAGE II - PHASE 2

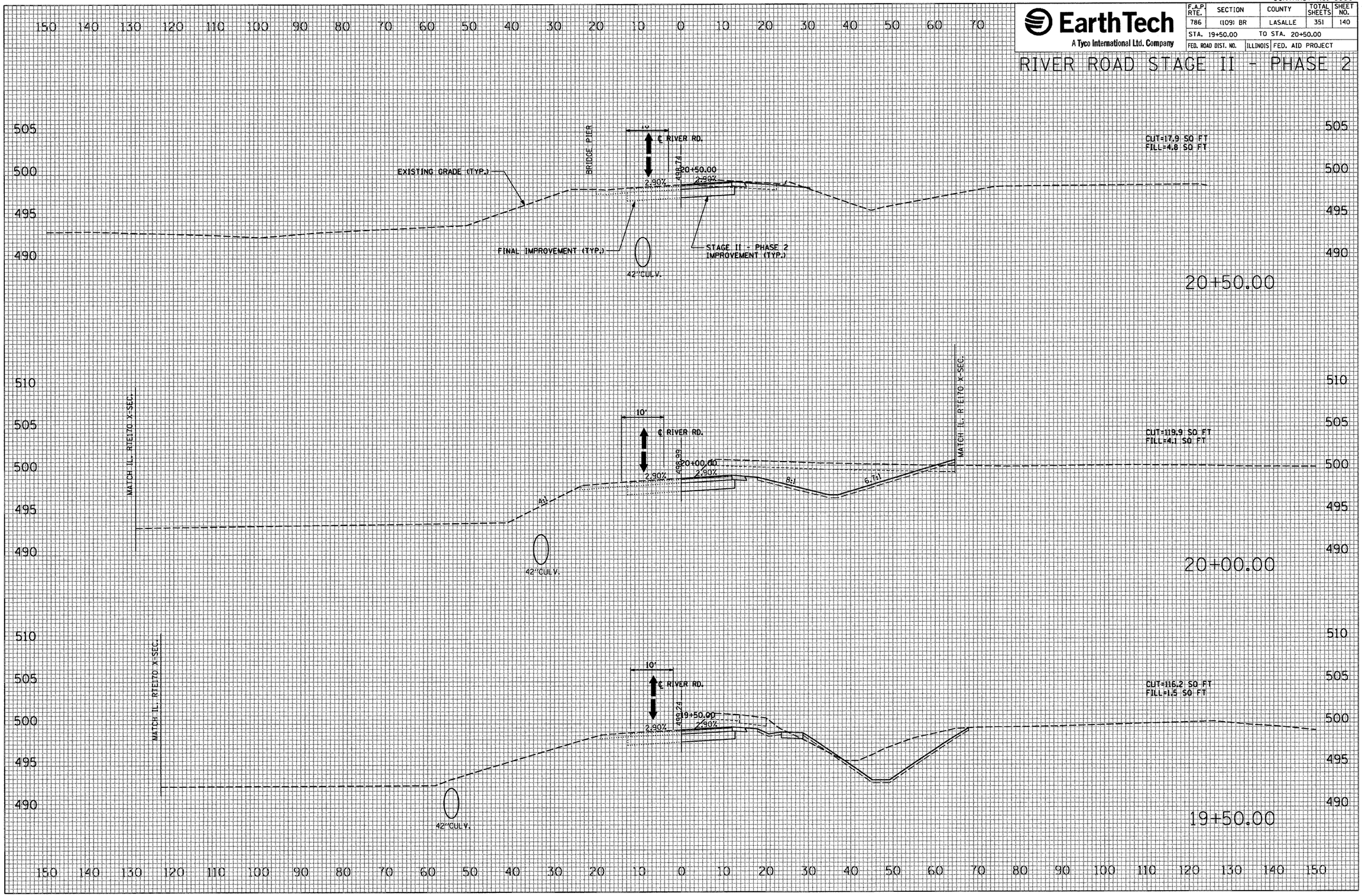

FINAL SURVEY	BY	DATE
SURVEYED		
PLOTTED		
TEMPLATE		
AREAS		
AREAS CHECKED		
NOTE BOOK		
NO.		

ORIGINAL SURVEY	BY	DATE
SURVEYED		
PLOTTED		
TEMPLATE		
AREAS		
AREAS CHECKED		
NOTE BOOK		
NO.		

PLOT DATE = 10/4/2007
FILE NAME = $FILEL$
PLOT SCALE = $SCALEL$
USER NAME = projects

CONTRACT NO. 66607

EarthTech
A Tyco International Ltd. Company

F.A.P. RTE.	SECTION	COUNTY	TOTAL SHEETS	SHEET NO.
786	(109) BR	LASALLE	351	141
STA. 21+00.00		TO STA. 22+00.00		
FED. ROAD DIST. NO.		ILLINOIS	FED. AID PROJECT	

RIVER ROAD STAGE II - PHASE 2

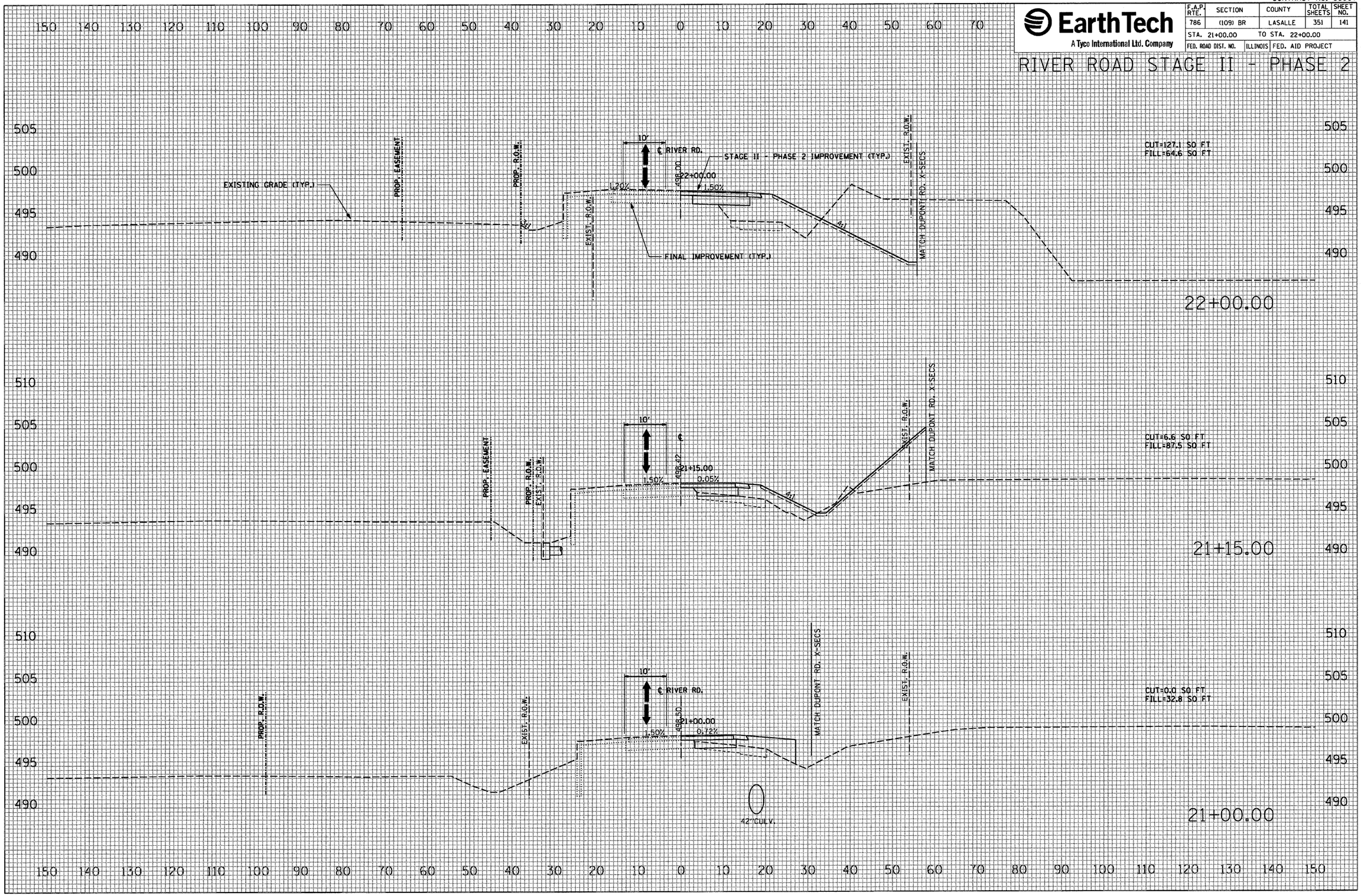

FINAL SURVEY		BY	DATE
NOTE BOOK NO.	SURVEYED		
	PLOTTED		
	TEMPLATE		
	AREAS		
	AREAS CHECKED		

ORIGINAL SURVEY		BY	DATE
NOTE BOOK NO.	SURVEYED		
	PLOTTED		
	TEMPLATE		
	AREAS		
	AREAS CHECKED		

PLOT DATE = 10/4/2007
FILE NAME = $FILEL$
PLOT SCALE = $SCALEL$
USER NAME = project

CONTRACT NO. 66607

EarthTech
A Tyco International Ltd. Company

F.A.P. RTE.	SECTION	COUNTY	TOTAL SHEETS	SHEET NO.
786	(109) BR	LASALLE	351	142
STA. 23+00.00		TO STA. 23+80.00		
FED. ROAD DIST. NO.	ILLINOIS	FED. AID PROJECT		

RIVER ROAD STAGE II - PHASE 2

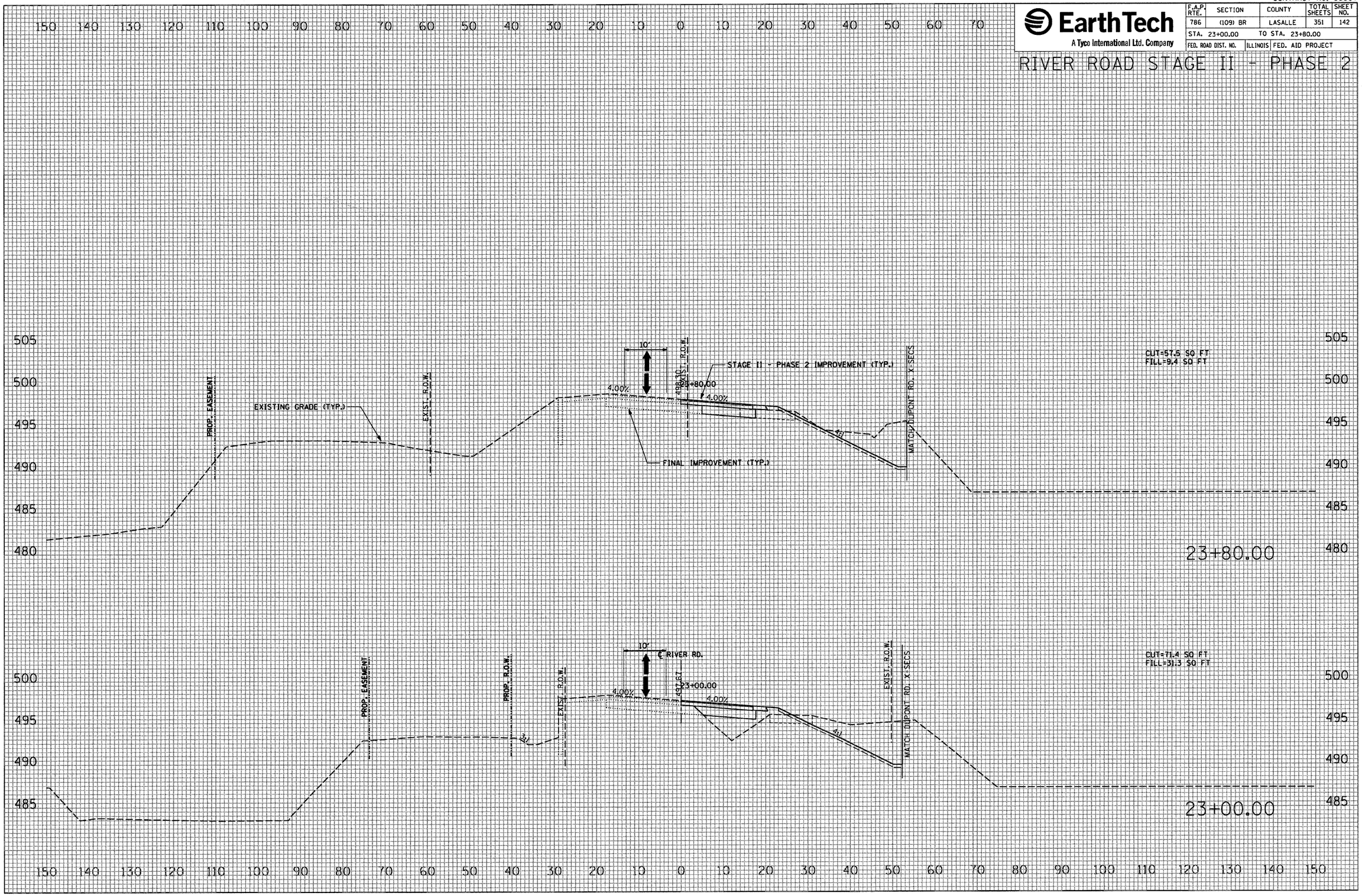

FINAL SURVEY		BY	DATE
	SURVEYED		
	PLOTTED		
NOTE BOOK	TEMPLATE		
	AREAS		
NO.	AREAS CHECKED		

ORIGINAL SURVEY		BY	DATE
	SURVEYED		
	PLOTTED		
NOTE BOOK	TEMPLATE		
	AREAS		
NO.	AREAS CHECKED		

PLOT DATE = 10/4/2007
FILE NAME = $FILEL$
PLOT SCALE = $SCALE$
USER NAME = project

CONTRACT NO. 66607

EarthTech
A Tyco International Ltd. Company

F.A.P. RTE.	SECTION	COUNTY	TOTAL SHEETS	SHEET NO.
786	(109) BR	LASALLE	351	143
STA. 24+00.00		TO STA. 24+00.00		
FED. ROAD DIST. NO.	ILLINOIS	FED. AID PROJECT		

RIVER ROAD STAGE II - PHASE 2

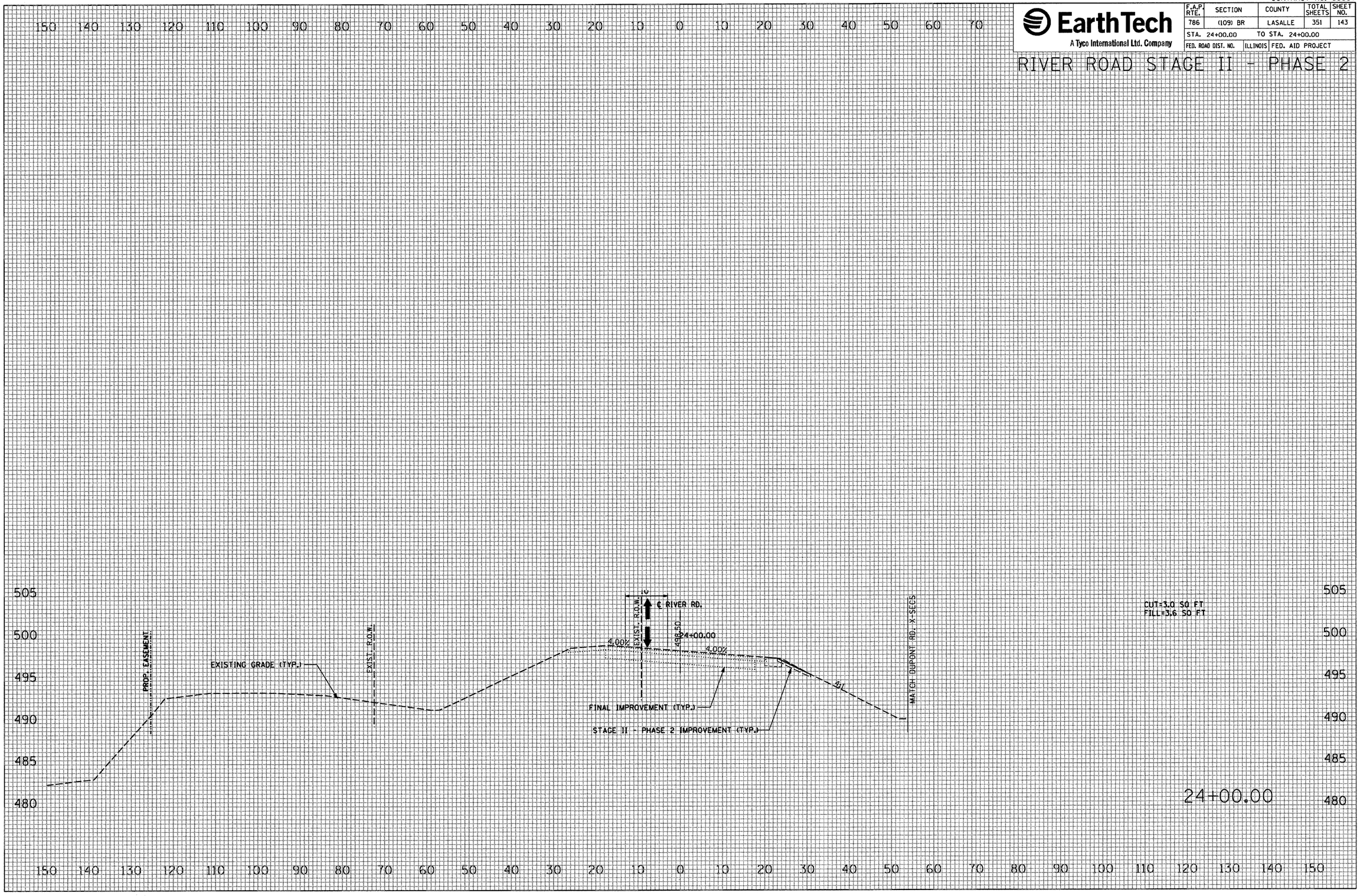

FINAL SURVEY		BY	DATE
	SURVEYED		
	PLOTTED		
NOTE BOOK	TEMPLATE		
	AREAS		
NO.	AREAS CHECKED		

ORIGINAL SURVEY		BY	DATE
	SURVEYED		
	PLOTTED		
NOTE BOOK	TEMPLATE		
	AREAS		
NO.	AREAS CHECKED		

PLOT DATE = 10/4/2007
FILE NAME = $FILEL$
PLOT SCALE = $SCALE$
USER NAME = proj_mgt

CONTRACT NO. 66607

EarthTech
A Tyco International Ltd. Company

F.A.P. RTE.	SECTION	COUNTY	TOTAL SHEETS	SHEET NO.
786	(109) BR	LASALLE	351	144
STA. 63+47.38		TO STA. 65+65.91		
FED. ROAD DIST. NO.	ILLINOIS	FED. AID PROJECT		

ILLINOIS ROUTE 170 NORTH STAGE III - PHASE 1

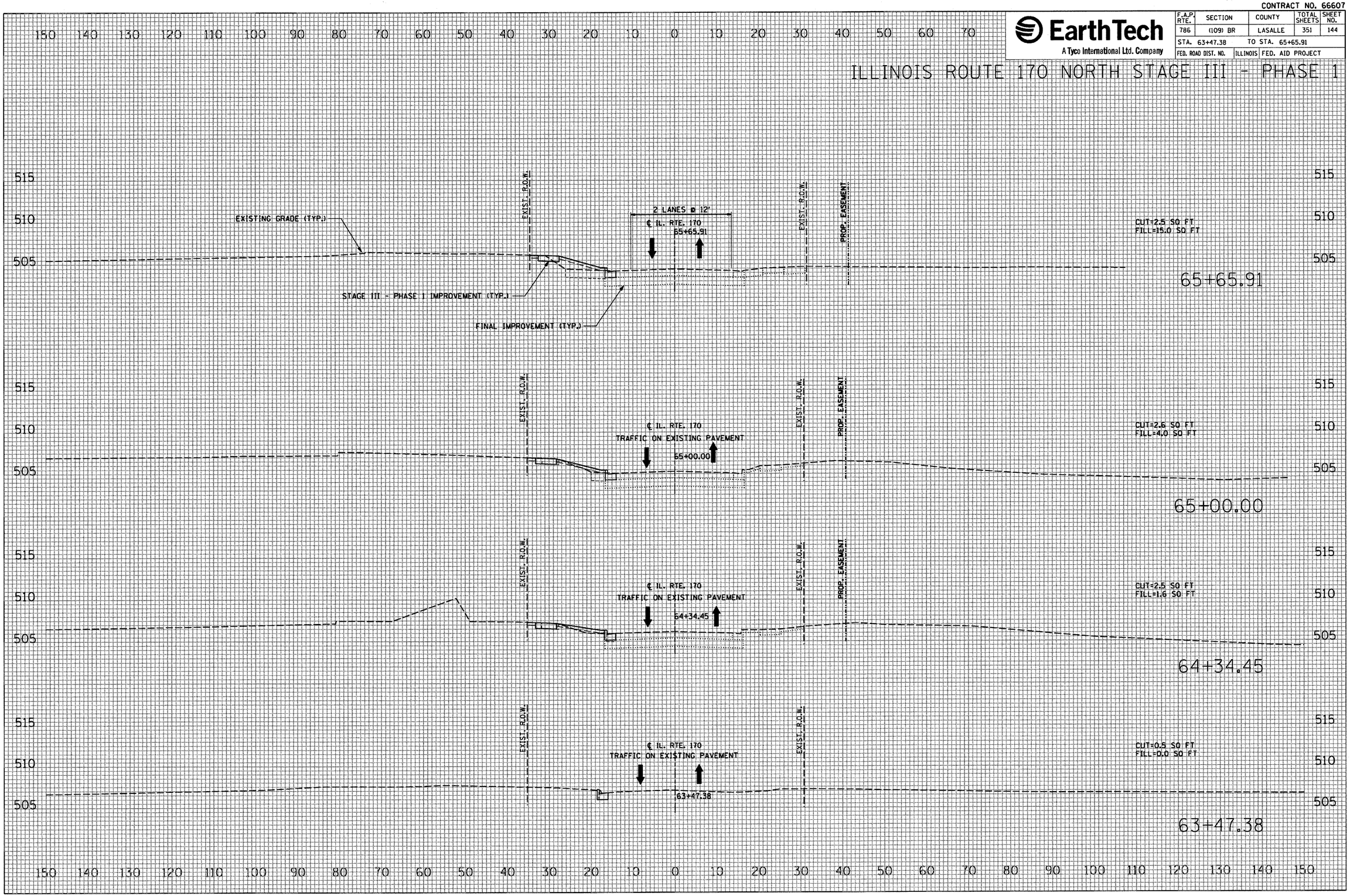

FINAL SURVEY	BY	DATE
SURVEYED		
PLOTTED		
NOTE BOOK TEMPLATE		
AREAS		
AREAS CHECKED		
NO.		

ORIGINAL SURVEY	BY	DATE
SURVEYED		
PLOTTED		
NOTE BOOK TEMPLATE		
AREAS		
AREAS CHECKED		
NO.		

PLOT DATE = 10/4/2007
FILE NAME = $FILEL$
PLOT SCALE = $SCALE$
USER NAME = projects

CONTRACT NO. 66607

EarthTech
A Tyco International Ltd. Company

F.A.P. RTE.	SECTION	COUNTY	TOTAL SHEETS	SHEET NO.
786	(109) BR	LASALLE	351	145
STA. 66+00.00		TO STA. 67+62.59		
FED. ROAD DIST. NO.	ILLINOIS	FED. AID PROJECT		

ILLINOIS ROUTE 170 NORTH STAGE III - PHASE 1

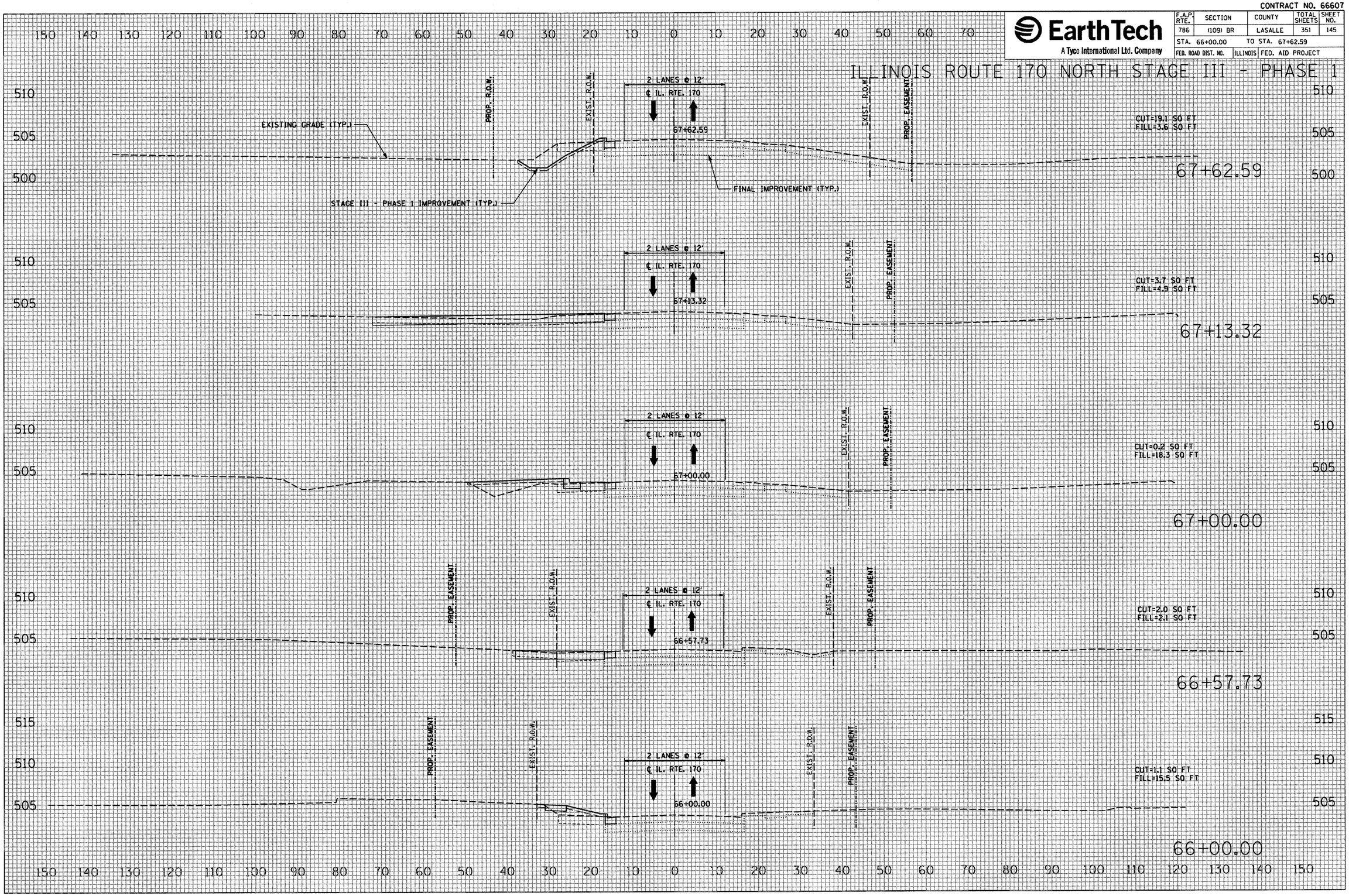

FINAL SURVEY		BY	DATE
	SURVEYED		
	PLOTTED		
NOTE BOOK	TEMPLATE		
	AREAS		
NO.	AREAS CHECKED		

ORIGINAL SURVEY		BY	DATE
	SURVEYED		
	PLOTTED		
NOTE BOOK	TEMPLATE		
	AREAS		
NO.	AREAS CHECKED		

PLOT DATE = 10/4/2007
FILE NAME = $FILEL$
PLOT SCALE = $SCALE$
USER NAME = proj_mgt

CONTRACT NO. 66607

EarthTech
A Tyco International Ltd. Company

F.A.P. RTE.	SECTION	COUNTY	TOTAL SHEETS	SHEET NO.
786	(109) BR	LASALLE	351	146
STA. 68+00.00		TO STA. 69+00.00		
FED. ROAD DIST. NO.		ILLINOIS	FED. AID PROJECT	

ILLINOIS ROUTE 170 NORTH STAGE III - PHASE 1

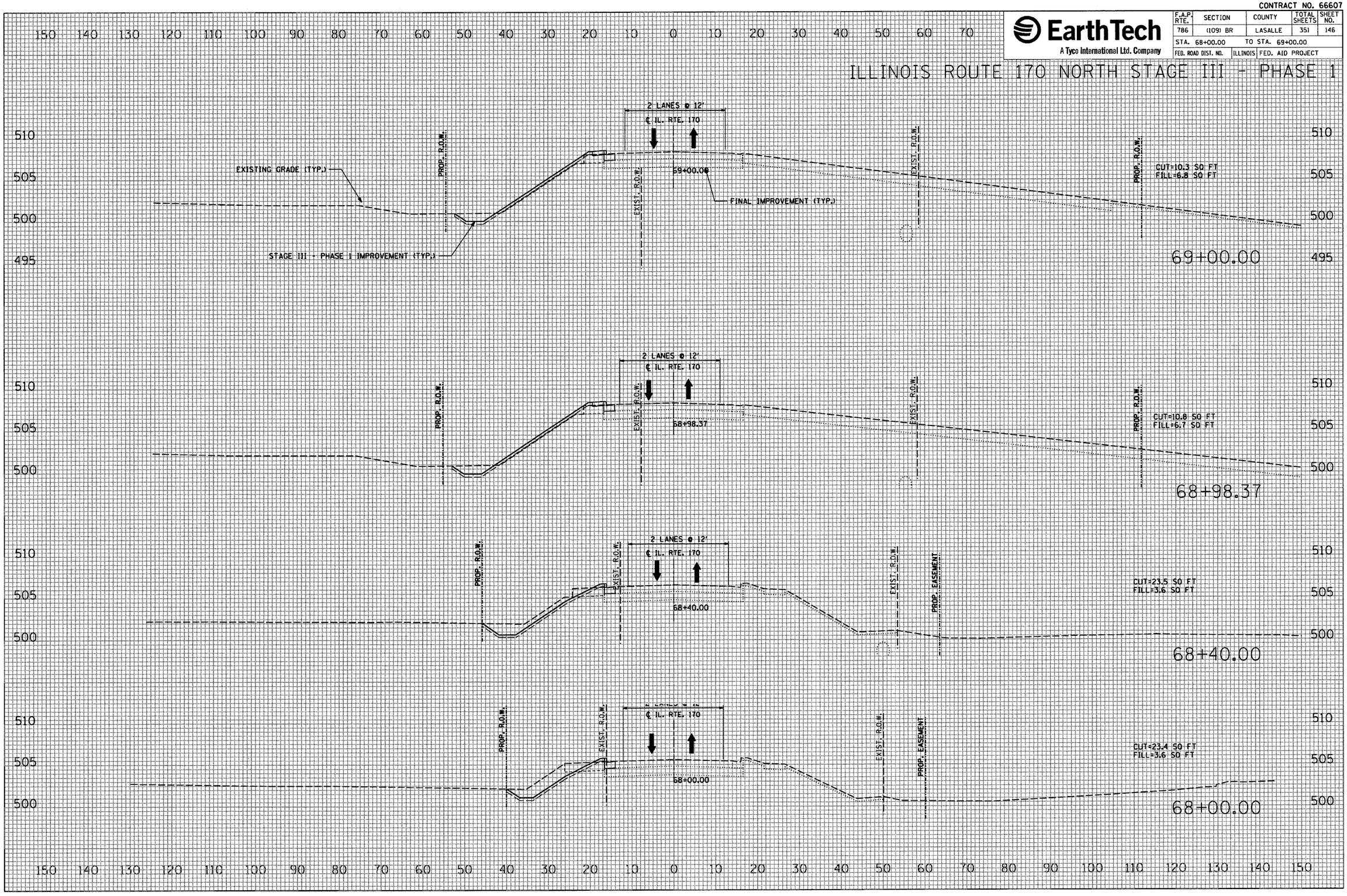

FINAL SURVEY		BY	DATE
	SURVEYED		
	PLOTTED		
	TEMPLATE		
NOTE BOOK	AREAS		
	AREAS CHECKED		
NO.			

ORIGINAL SURVEY		BY	DATE
	SURVEYED		
	PLOTTED		
	TEMPLATE		
NOTE BOOK	AREAS		
	AREAS CHECKED		
NO.			

PLOT DATE = 10/4/2007
FILE NAME = $FILE$
PLOT SCALE = $SCALE$
USER NAME = project

CONTRACT NO. 66607

EarthTech
A Tyco International Ltd. Company

F.A.P. RTE.	SECTION	COUNTY	TOTAL SHEETS	SHEET NO.
786	(109) BR	LASALLE	351	147
STA. 69+82.89		TO STA. 70+83.74		
FED. ROAD DIST. NO.	ILLINOIS	FED. AID PROJECT		

ILLINOIS ROUTE 170 NORTH STAGE III - PHASE 1

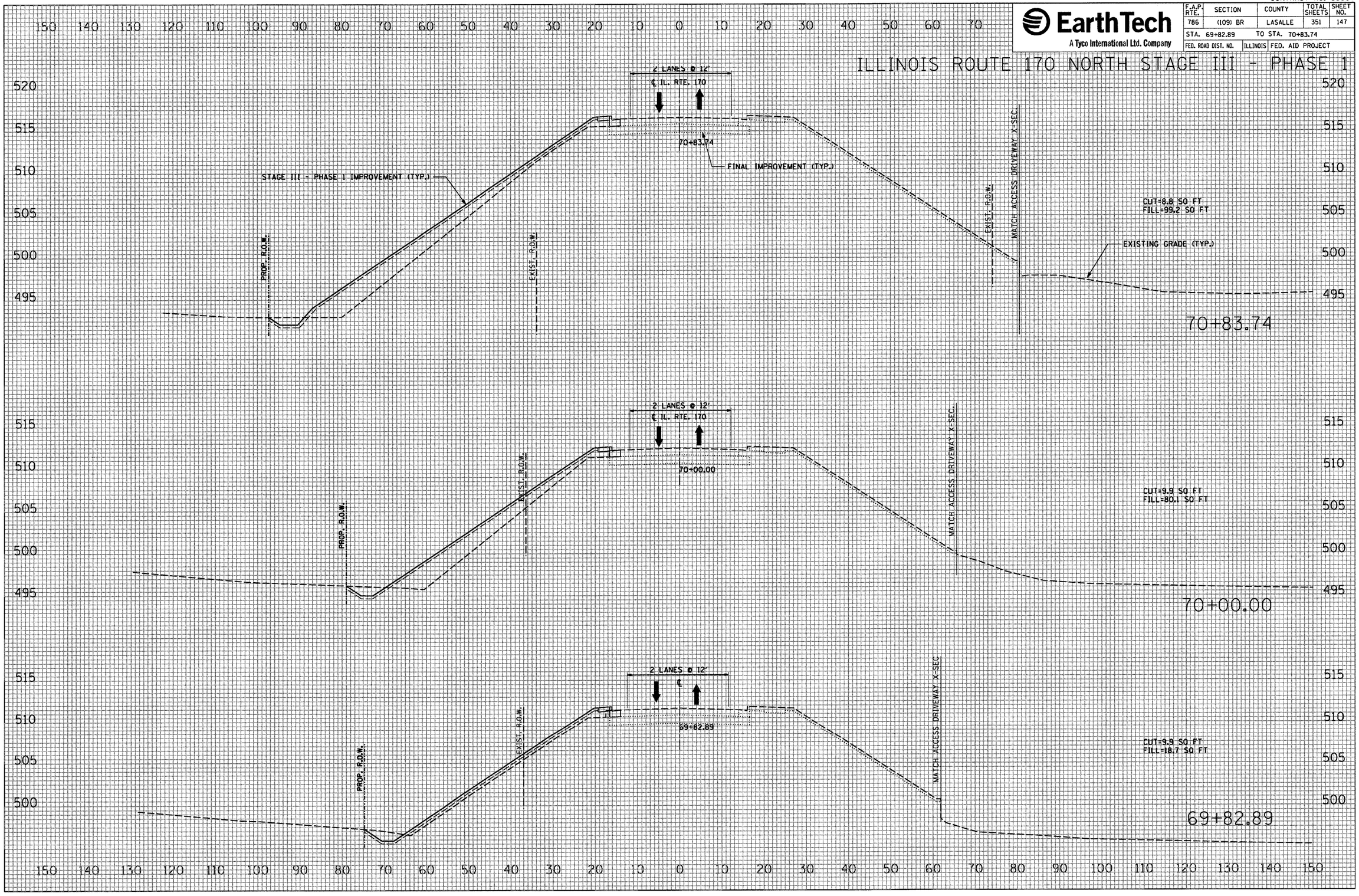

FINAL SURVEY | NOTE BOOK NO. | SURVEYED | PLOTTED | TEMPLATE | AREAS | AREAS CHECKED | BY | DATE

ORIGINAL SURVEY | NOTE BOOK NO. | SURVEYED | PLOTTED | TEMPLATE | AREAS | AREAS CHECKED | BY | DATE

PLOT DATE = 10/4/2007
FILE NAME = $FILEL$
PLOT SCALE = $SCALE$
USER NAME = project

CONTRACT NO. 66607

EarthTech
A Tyco International Ltd. Company

F.A.P. RTE.	SECTION	COUNTY	TOTAL SHEETS	SHEET NO.
786	(109) BR	LASALLE	351	148
STA. 71+00.00		TO STA. 71+64.00		
FED. ROAD DIST. NO.	ILLINOIS	FED. AID PROJECT		

ILLINOIS ROUTE 170 NORTH STAGE III - PHASE 1

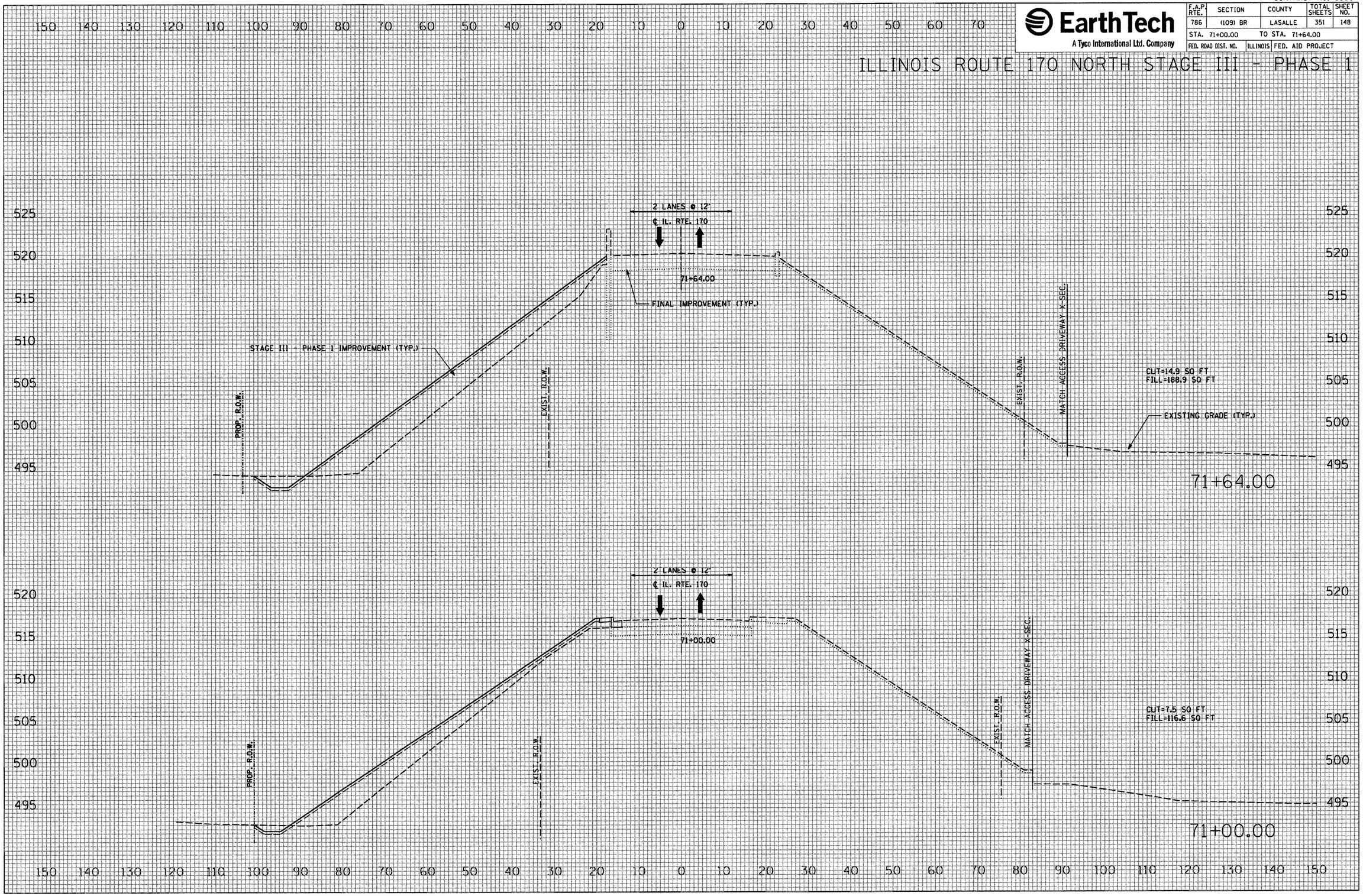

FINAL SURVEY		BY	DATE
	SURVEYED		
	PLOTTED		
NOTE BOOK	TEMPLATE		
	AREAS		
NO.	AREAS CHECKED		

ORIGINAL SURVEY		BY	DATE
	SURVEYED		
	PLOTTED		
NOTE BOOK	TEMPLATE		
	AREAS		
NO.	AREAS CHECKED		

PLOT DATE = 10/4/2007
FILE NAME = $FILEL$
PLOT SCALE = $SCALE$
USER NAME = project

CONTRACT NO. 66607

EarthTech
A Tyco International Ltd. Company

F.A.P. RTE.	SECTION	COUNTY	TOTAL SHEETS	SHEET NO.
786	(109) BR	LASALLE	351	149
STA. 71+98.67		TO STA. 72+00.00		
FED. ROAD DIST. NO.	ILLINOIS	FED. AID PROJECT		

ILLINOIS ROUTE 170 NORTH STAGE III - PHASE 1

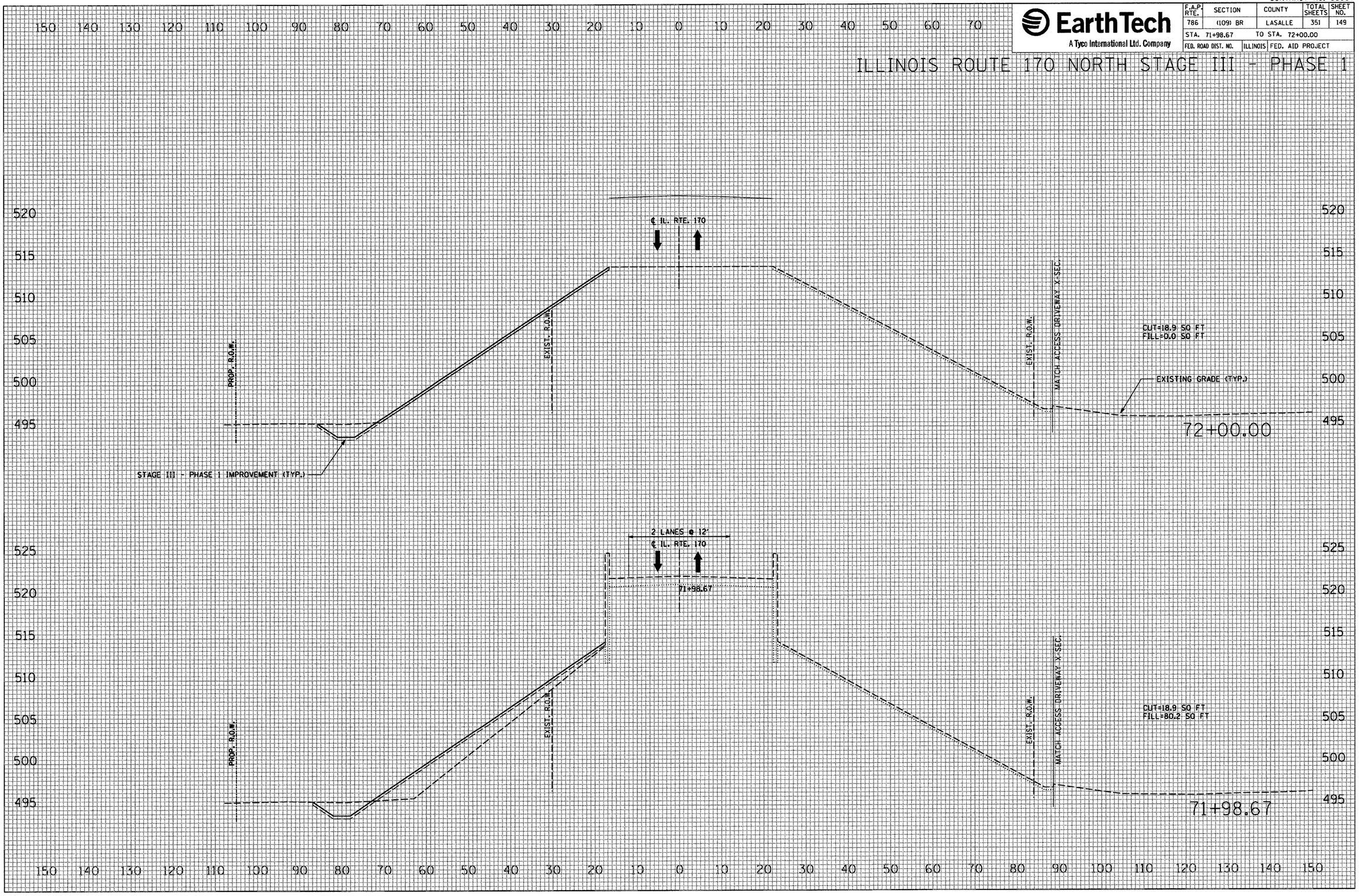

FINAL SURVEY		BY	DATE
	SURVEYED		
	PLOTTED		
NOTE BOOK	TEMPLATE		
	AREAS		
NO.	AREAS CHECKED		

ORIGINAL SURVEY		BY	DATE
	SURVEYED		
	PLOTTED		
NOTE BOOK	TEMPLATE		
	AREAS		
NO.	AREAS CHECKED		

PLOT DATE = 10/4/2007
FILE NAME = $FILEL$
PLOT SCALE = $SCALE$
USER NAME = project

CONTRACT NO. 66607

EarthTech
A Tyco International Ltd. Company

F.A.P. RTE.	SECTION	COUNTY	TOTAL SHEETS	SHEET NO.
786	(109) BR	LASALLE	351	150
STA. 88+92.51		TO STA. 89+00.00		
FED. ROAD DIST. NO.	ILLINOIS	FED. AID PROJECT		

ILLINOIS ROUTE 170 SOUTH STAGE III - PHASE 1

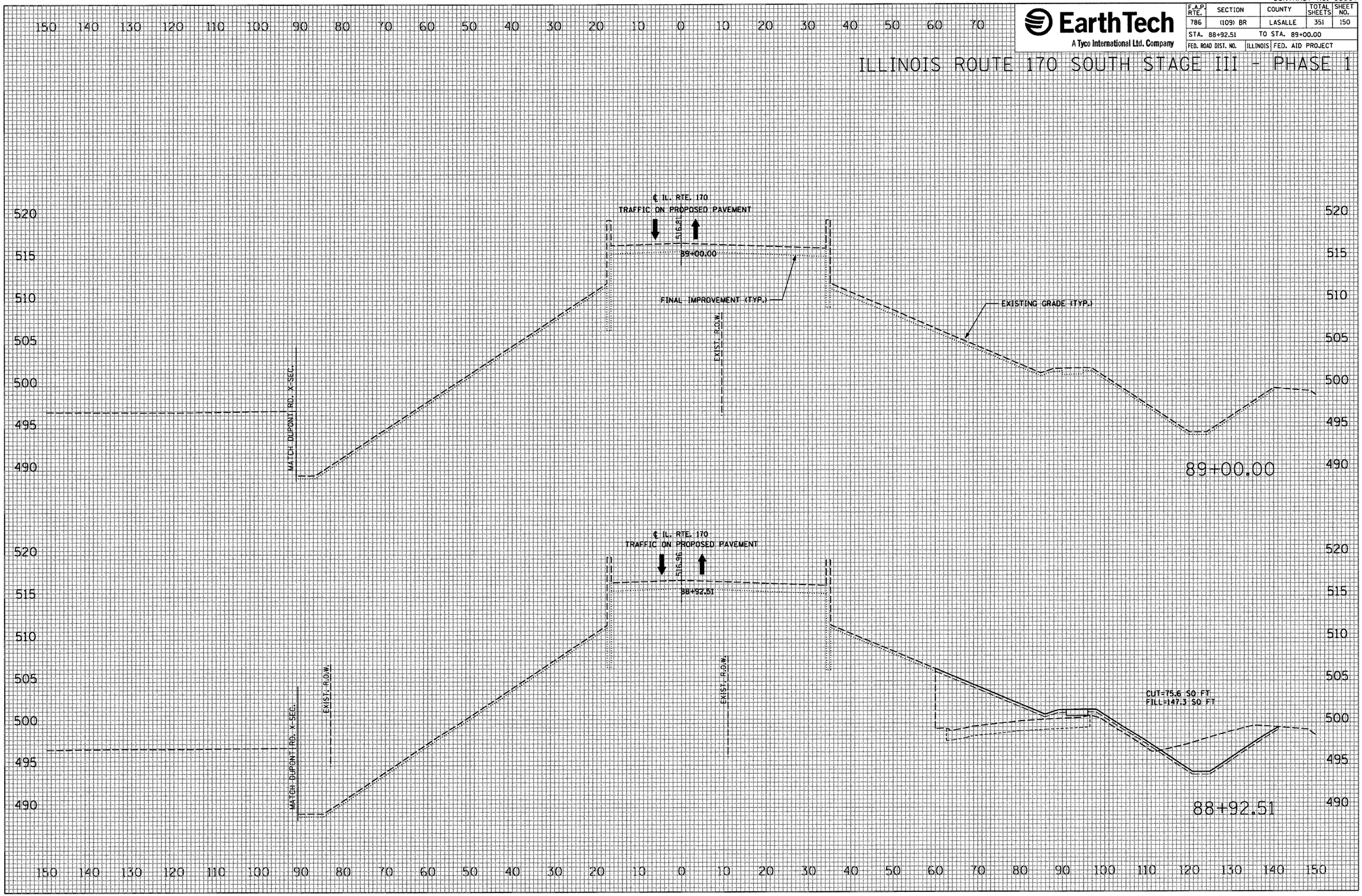

FINAL SURVEY	BY	DATE
SURVEYED		
PLOTTED		
TEMPLATE		
AREAS		
AREAS CHECKED		
NOTE BOOK NO.		

ORIGINAL SURVEY	BY	DATE
SURVEYED		
PLOTTED		
TEMPLATE		
AREAS		
AREAS CHECKED		
NOTE BOOK NO.		

PLOT DATE = 10/4/2007
FILE NAME = $FILEL$
PLOT SCALE = $SCALEL$
USER NAME = proj_mct

CONTRACT NO. 66607

EarthTech
A Tyco International Ltd. Company

F.A.P. RTE.	SECTION	COUNTY	TOTAL SHEETS	SHEET NO.
786	(109) BR	LASALLE	351	151
STA. 94+00.00		TO STA. 96+00.00		
FED. ROAD DIST. NO.		ILLINOIS	FED. AID PROJECT	

ILLINOIS ROUTE 170 SOUTH STAGE III - PHASE 1

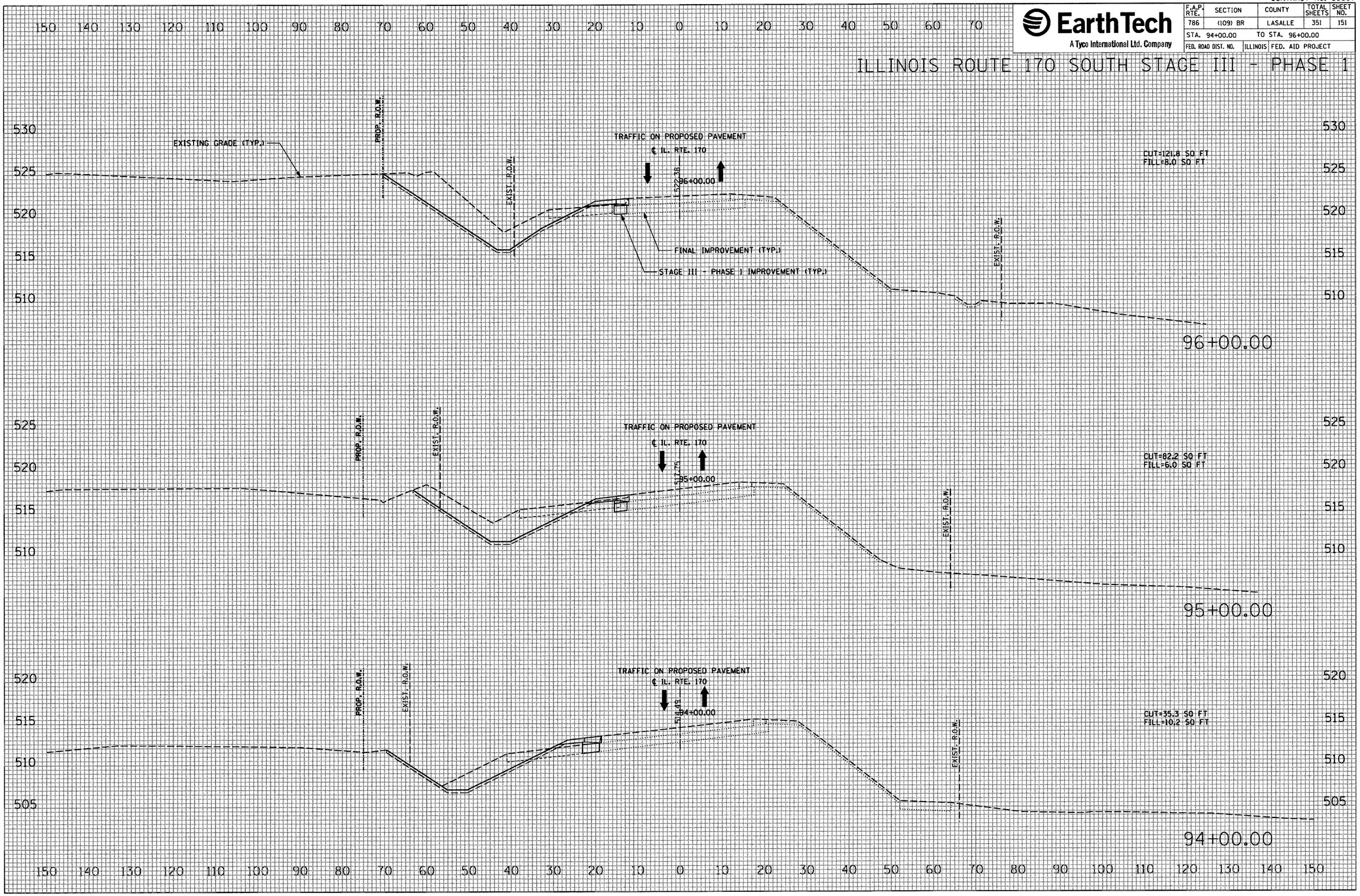

FINAL SURVEY	BY	DATE
SURVEYED		
PLOTTED		
TEMPLATE		
AREAS		
AREAS CHECKED		
NOTE BOOK NO.		

ORIGINAL SURVEY	BY	DATE
SURVEYED		
PLOTTED		
TEMPLATE		
AREAS		
AREAS CHECKED		
NOTE BOOK NO.		

PLOT DATE = 10/4/2007
FILE NAME = $FILE$
PLOT SCALE = $SCALE$
USER NAME = project

CONTRACT NO. 66607

EarthTech
A Tyco International Ltd. Company

F.A.P. RTE.	SECTION	COUNTY	TOTAL SHEETS	SHEET NO.
786	(109) BR	LASALLE	351	152
STA. 96+50.00		TO STA. 96+85.00		
FED. ROAD DIST. NO.	ILLINOIS	FED. AID PROJECT		

ILLINOIS ROUTE 170 SOUTH STAGE III - PHASE 1

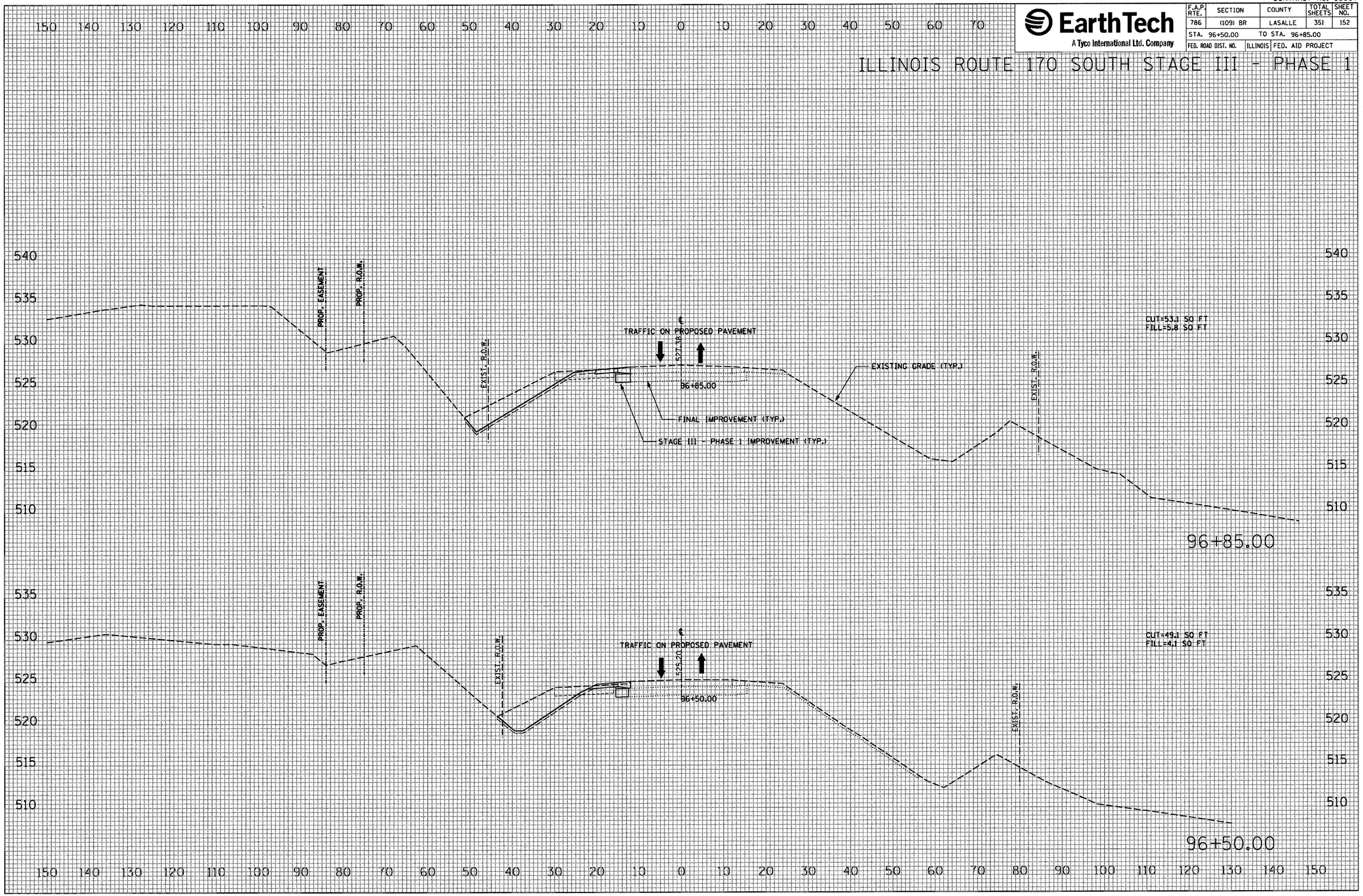

FINAL SURVEY	SURVEYED	BY	DATE
	PLOTTED		
	TEMPLATE		
NOTE BOOK	AREAS		
NO.	AREAS CHECKED		

ORIGINAL SURVEY	SURVEYED	BY	DATE
	PLOTTED		
	TEMPLATE		
NOTE BOOK	AREAS		
NO.	AREAS CHECKED		

PLOT DATE = 10/4/2007
FILE NAME = $FILE$
PLOT SCALE = $SCALE$
USER NAME = project

CONTRACT NO. 66607

EarthTech
A Tyco International Ltd. Company

F.A.P. RTE.	SECTION	COUNTY	TOTAL SHEETS	SHEET NO.
786	(109) BR	LASALLE	351	153
STA. 97+00.00		TO STA. 97+49.49		
FED. ROAD DIST. NO.		ILLINOIS	FED. AID PROJECT	

ILLINOIS ROUTE 170 SOUTH STAGE III - PHASE 1

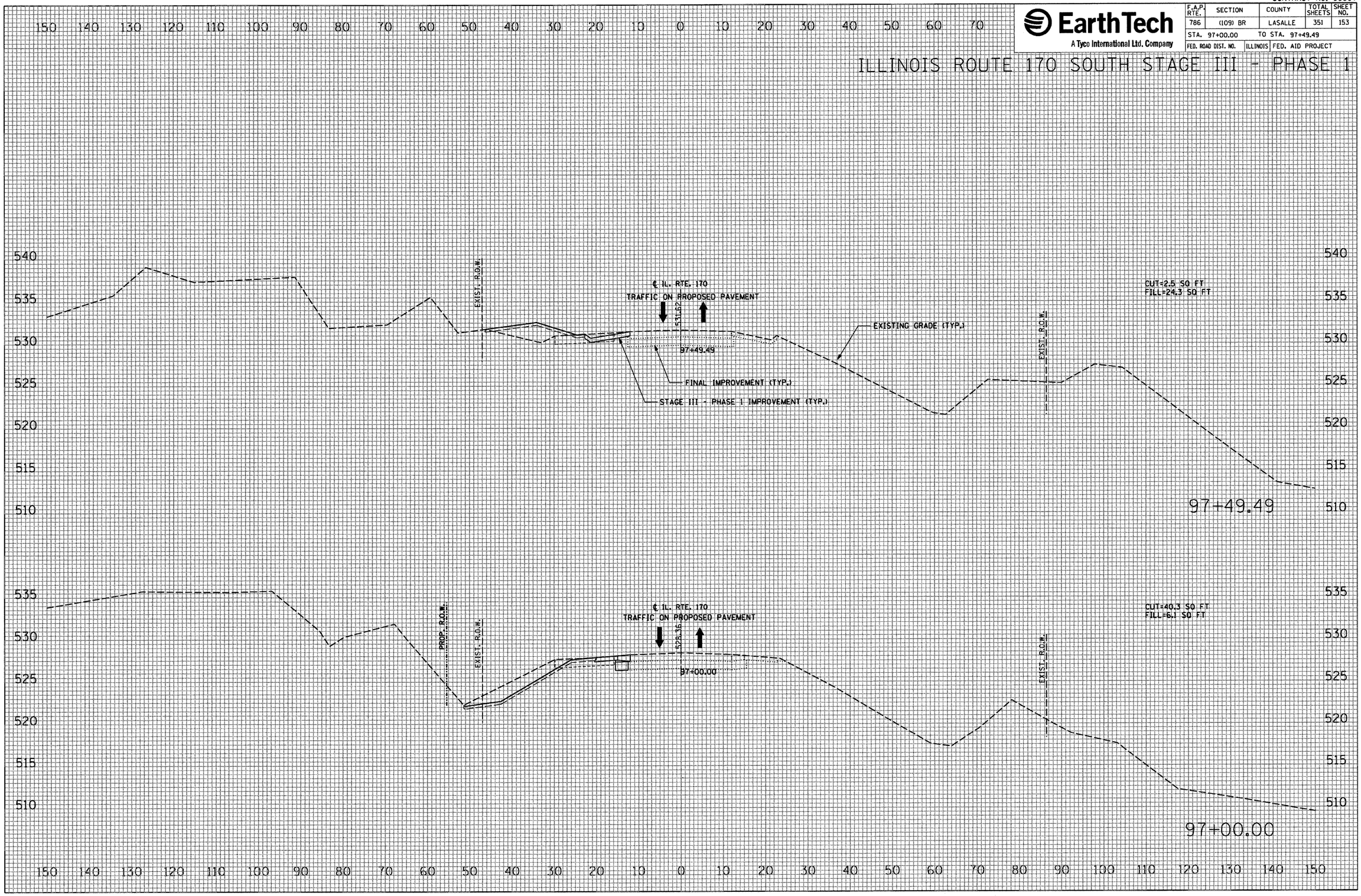

FINAL SURVEY		BY	DATE
NOTE BOOK	SURVEYED		
	PLOTTED		
	TEMPLATE		
	AREAS		
NO.	AREAS CHECKED		

ORIGINAL SURVEY		BY	DATE
NOTE BOOK	SURVEYED		
	PLOTTED		
	TEMPLATE		
	AREAS		
NO.	AREAS CHECKED		

PLOT DATE = 10/4/2007
FILE NAME = $FILE$
PLOT SCALE = $SCALE$
USER NAME = project

CONTRACT NO. 66607

EarthTech
A Tyco International Ltd. Company

F.A.P. RTE.	SECTION	COUNTY	TOTAL SHEETS	SHEET NO.
786	(109) BR	LASALLE	351	154
STA. 97+73.55		TO STA. 98+00.00		
FED. ROAD DIST. NO.	ILLINOIS	FED. AID PROJECT		

ILLINOIS ROUTE 170 SOUTH STAGE III - PHASE 1

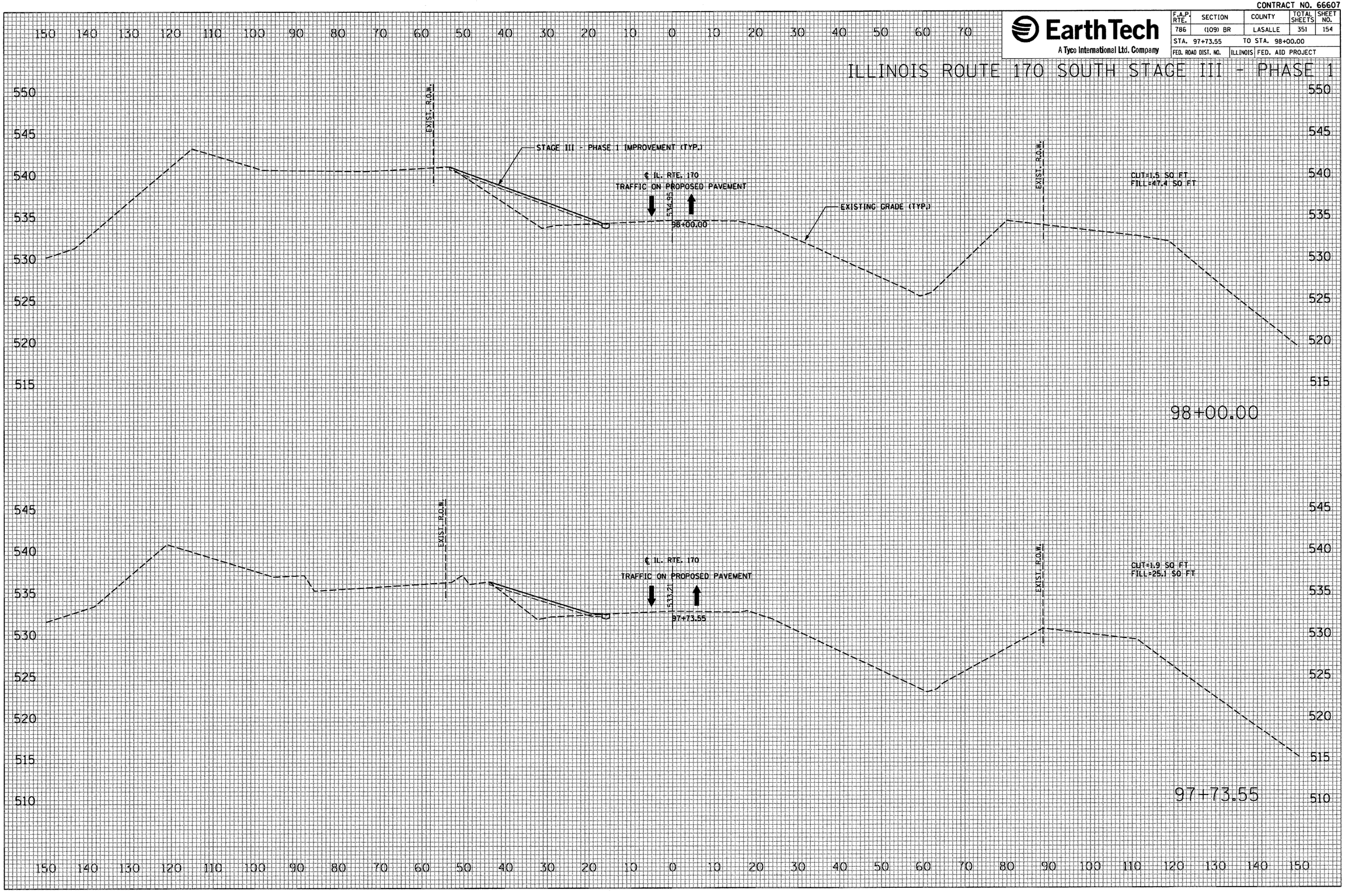

FINAL SURVEY		BY	DATE
NOTE BOOK NO.	SURVEYED		
	PLOTTED		
	TEMPLATE		
	AREAS		
	AREAS CHECKED		

ORIGINAL SURVEY		BY	DATE
NOTE BOOK NO.	SURVEYED		
	PLOTTED		
	TEMPLATE		
	AREAS		
	AREAS CHECKED		

PLOT DATE = 10/4/2007
FILE NAME = $FILEL$
PLOT SCALE = $SCALE$
USER NAME = project

CONTRACT NO. 66607

EarthTech
A Tyco International Ltd. Company

F.A.P. RTE.	SECTION	COUNTY	TOTAL SHEETS	SHEET NO.
786	(109) BR	LASALLE	351	155
STA. 99+00.00		TO STA. 99+00.00		
FED. ROAD DIST. NO.	ILLINOIS	FED. AID PROJECT		

ILLINOIS ROUTE 170 SOUTH STAGE III - PHASE 1

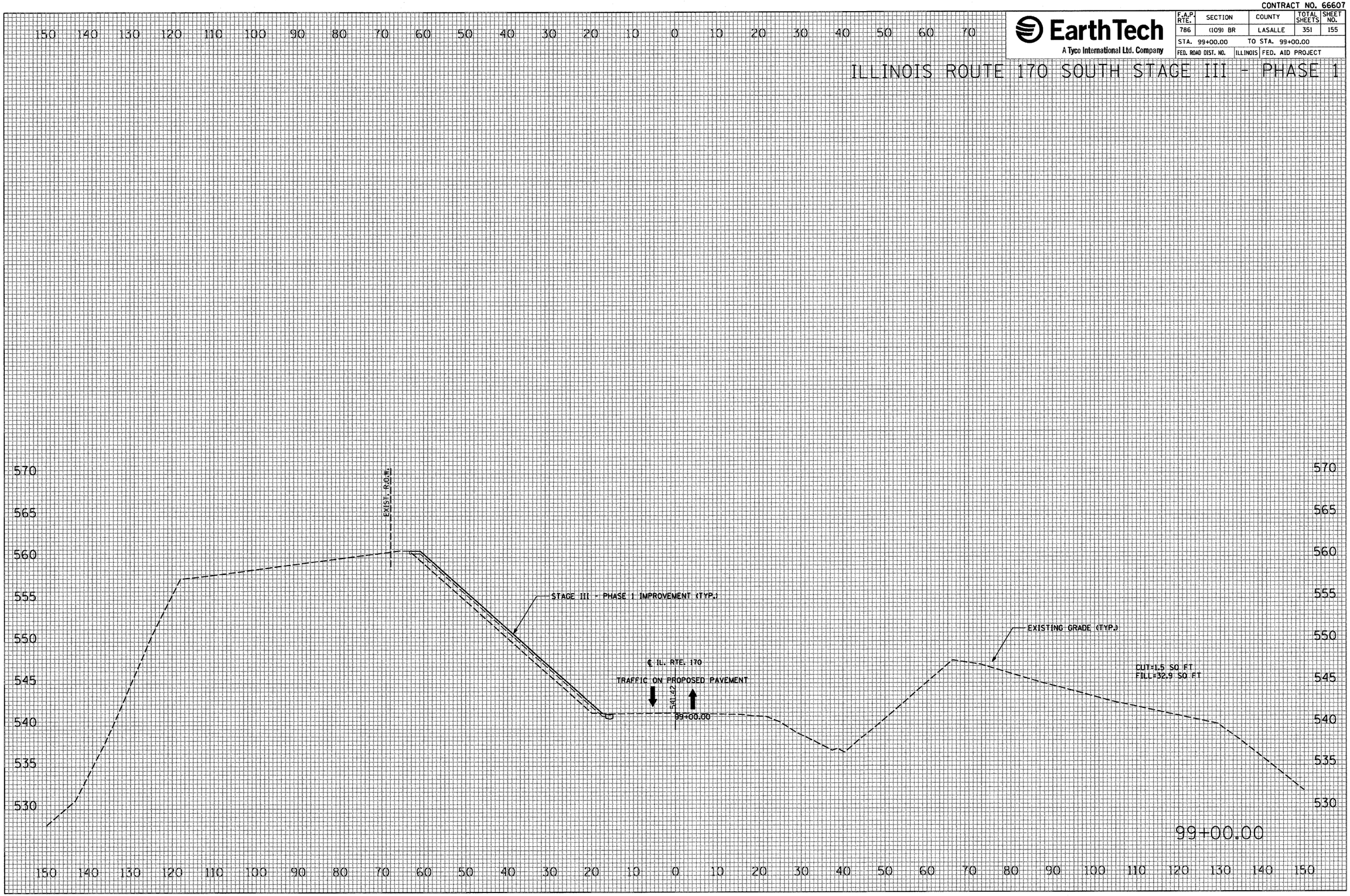

FINAL SURVEY		BY	DATE
NOTE BOOK	SURVEYED		
	PLOTTED		
	TEMPLATE		
	AREAS		
NO.	AREAS CHECKED		

ORIGINAL SURVEY		BY	DATE
NOTE BOOK	SURVEYED		
	PLOTTED		
	TEMPLATE		
	AREAS		
NO.	AREAS CHECKED		

PLOT DATE = 10/4/2007
FILE NAME = $FILEL$
PLOT SCALE = $SCALE$
USER NAME = project

CONTRACT NO. 66607

EarthTech
A Tyco International Ltd. Company

F.A.P. RTE.	SECTION	COUNTY	TOTAL SHEETS	SHEET NO.
786	(109) BR	LASALLE	351	156
STA. 100+00.00		TO STA. 100+00.00		
FED. ROAD DIST. NO.	ILLINOIS	FED. AID PROJECT		

ILLINOIS ROUTE 170 SOUTH STAGE III - PHASE 1

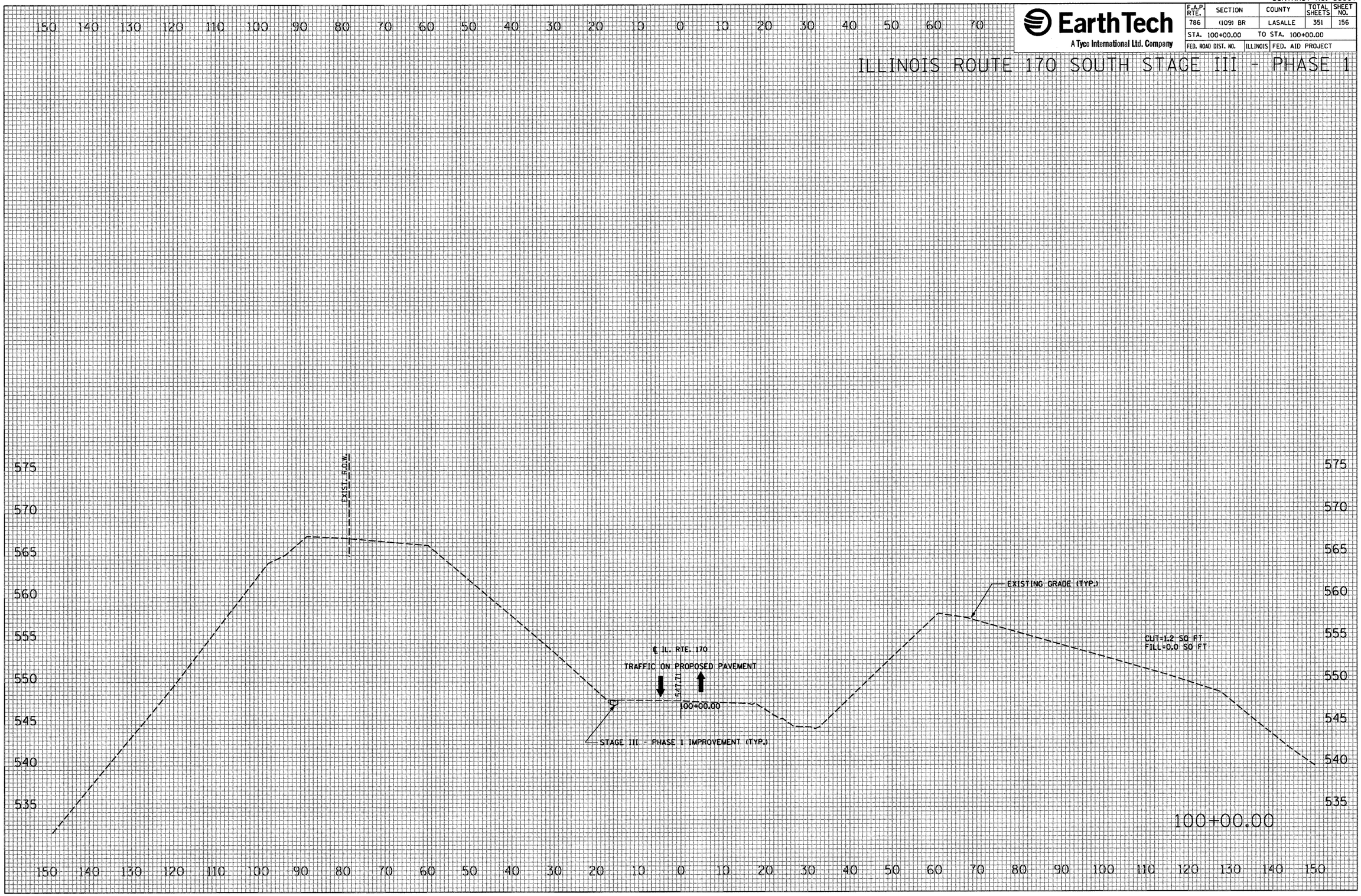

FINAL SURVEY		BY	DATE
	SURVEYED		
	PLOTTED		
	TEMPLATE		
NOTE BOOK	AREAS		
NO.	AREAS CHECKED		

ORIGINAL SURVEY		BY	DATE
	SURVEYED		
	PLOTTED		
	TEMPLATE		
NOTE BOOK	AREAS		
NO.	AREAS CHECKED		

PLOT DATE = 10/4/2007
FILE NAME = $FILEL$
PLOT SCALE = $SCALE$
USER NAME = project

CONTRACT NO.

EarthTech
A Tyco International Ltd. Company

F.A.P. RTE.	SECTION	COUNTY	TOTAL SHEETS	SHEET NO.
786	(109) BR	LASALLE	351	157
STA. 82+26.91		TO STA. 83+00.00		
FED. ROAD DIST. NO.	ILLINOIS	FED. AID PROJECT		

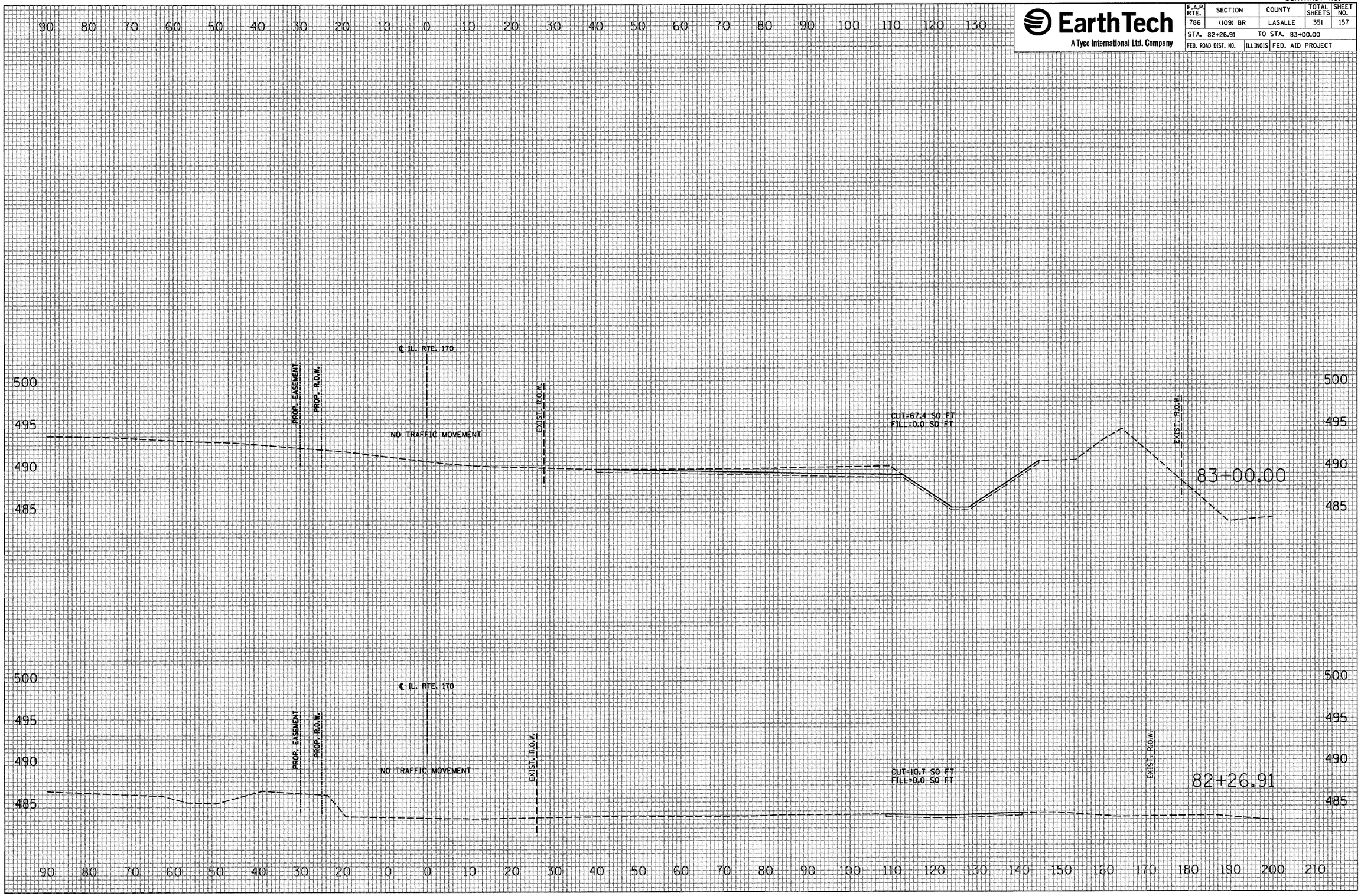

FINAL SURVEY		BY	DATE
NOTE BOOK NO.	SURVEYED		
	PLOTTED		
	TEMPLATE		
	AREAS		
	AREAS CHECKED		

ORIGINAL SURVEY		BY	DATE
NOTE BOOK NO.	SURVEYED		
	PLOTTED		
	TEMPLATE		
	AREAS		
	AREAS CHECKED		

PLOT DATE = 10/4/2007
FILE NAME = $FILEL$
PLOT SCALE = $SCALE$
USER NAME = project

CONTRACT NO.

EarthTech
A Tyco International Ltd. Company

F.A.P. RTE.	SECTION	COUNTY	TOTAL SHEETS	SHEET NO.
786	(109) BR	LASALLE	351	158
STA. 84+00.00		TO STA. 85+00.00		
FED. ROAD DIST. NO.	ILLINOIS	FED. AID PROJECT		

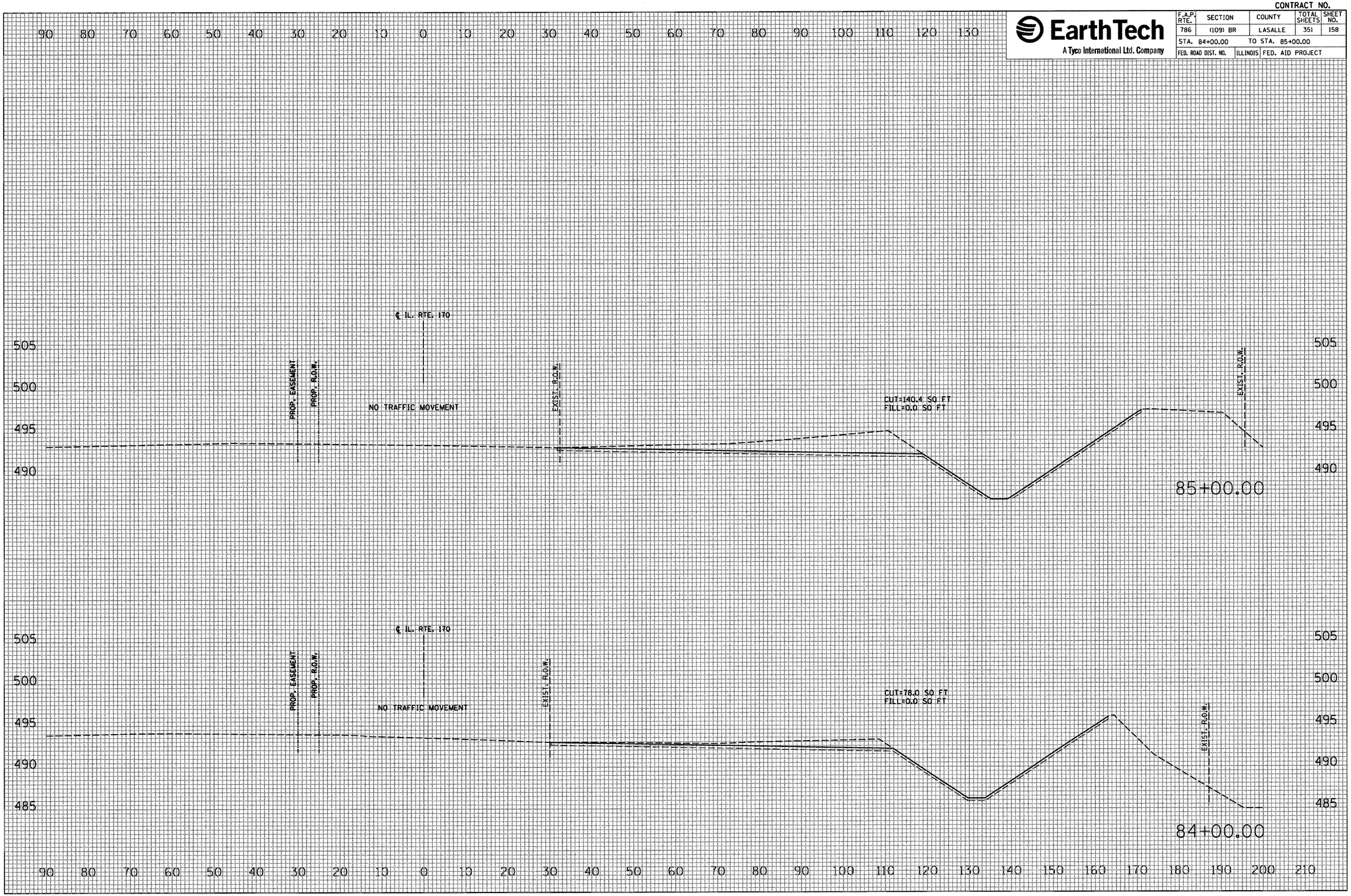

FINAL SURVEY		BY	DATE
	SURVEYED		
	PLOTTED		
	TEMPLATE		
NOTE BOOK	AREAS		
	AREAS CHECKED		
NO.			

ORIGINAL SURVEY		BY	DATE
	SURVEYED		
	PLOTTED		
	TEMPLATE		
NOTE BOOK	AREAS		
	AREAS CHECKED		
NO.			

PLOT DATE = 10/1/2007
FILE NAME = $FILE$
PLOT SCALE = $SCALE$
USER NAME = proj_mgt

CONTRACT NO.

EarthTech
A Tyco International Ltd. Company

F.A.P. RTE.	SECTION	COUNTY	TOTAL SHEETS	SHEET NO.
786	(109) BR	LASALLE	351	159
STA. 86+00.00		TO STA. 87+00.00		
FED. ROAD DIST. NO.	ILLINOIS	FED. AID PROJECT		

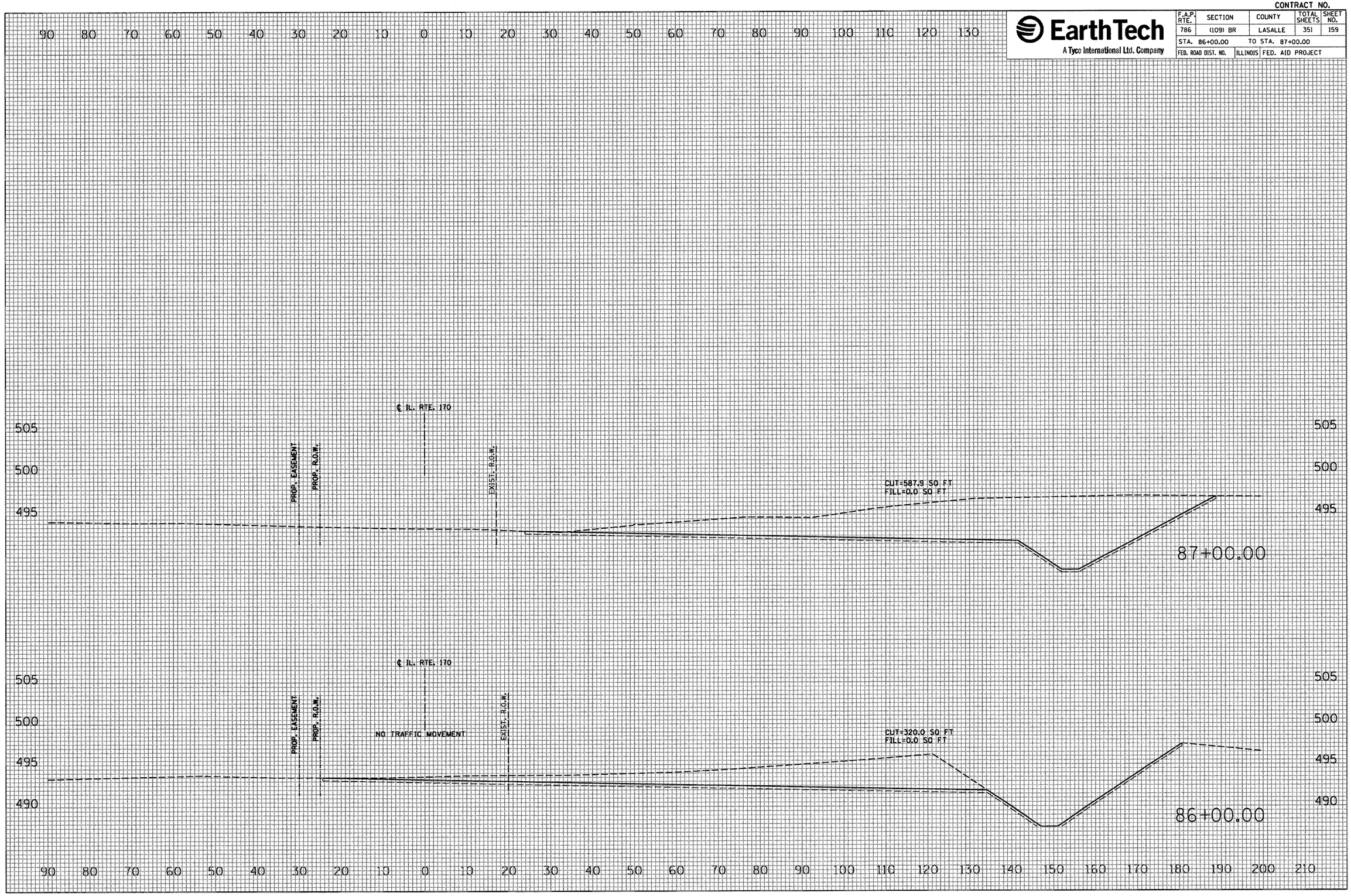

FINAL SURVEY		BY	DATE
	SURVEYED		
	PLOTTED		
NOTE BOOK	TEMPLATE		
	AREAS		
NO.	AREAS CHECKED		

ORIGINAL SURVEY		BY	DATE
	SURVEYED		
	PLOTTED		
NOTE BOOK	TEMPLATE		
	AREAS		
NO.	AREAS CHECKED		

PLOT DATE = 10/4/2007
FILE NAME = $FILEL$
PLOT SCALE = $SCALE$
USER NAME = projects

CONTRACT NO. 66607

EarthTech
A Tyco International Ltd. Company

F.A.P. RTE.	SECTION	COUNTY	TOTAL SHEETS	SHEET NO.
786	(109) BR	LASALLE	351	160
STA.		TO STA.		
FED. ROAD DIST. NO.	ILLINOIS	FED. AID PROJECT		

IL. RTE. 170 - END AREAS - STAGE 1 PHASE 1

Excavation volumes adjusted by 25% shrinkage factor

STATION	Cut End Areas (sq. ft.)	Fill End Areas (sq. ft.)
IL. RTE. 170 (NORTH) - STAGE 1 PHASE 1		
69+82.89	0.07	22.63
70+00.00	0.00	169.43
70+83.74	0.00	1062.47
71+00.00	0.00	1161.42
71+64.00	0.00	1303.74
71+98.67	0.00	777.98
72+00.00	0.00	738.16
72+24.00	0.00	0.00
ACCESS DRIVEWAY - STAGE 1 PHASE 1		
1+50.00	0.00	71.88
1+91.88	0.00	149.40
2+00.00	0.00	129.26
2+15.42	0.00	93.09
2+94.22	0.00	104.56
3+00.00	0.00	107.71
3+55.00	0.00	83.39
4+00.00	0.00	82.82
4+61.84	0.00	25.16
5+00.00	0.00	25.08
5+41.10	0.00	18.48
6+00.00	0.00	33.28
IL. RTE. 170 (SOUTH) - STAGE 1 PHASE 1		
82+26.91	3.83	0
83+00.00	100.52	0
84+00.00	219.93	0
85+00.00	296.60	0
86+00.00	307.57	0
88+65.00	41.00	235
88+92.51	148.32	1461.3
88+97.51	148.32	1461.3
89+00.00	135.26	1444.45
89+06.76	90.87	1601.18
89+27.19	90.87	1601.18
90+00.00	0.00	1684.37
90+43.24	0.00	1767.15
91+00.00	5.30	891.73
92+00.00	28.91	541.58
93+00.00	59.55	178.4
94+00.00	98.39	103.25
95+00.00	0.00	29.61
96+00.00	3.57	32.44
96+50.00	1.07	77
96+85.00	11.15	38.52
97+00.00	9.83	27.41
97+49.49	44.22	0.45
97+73.55	39.32	0.32
98+00.00	95.74	0.35
99+00.00	48.81	0.62
100+00.00	0.00	0.84
DUPONT ROAD - STAGE 1 PHASE 1		
140+50.00	0.00	908.14
141+00.00	328.12	1980.72
142+00.00	63.78	2282.53
143+00.00	26.62	2179.72
143+45.87	0.49	1740.83
144+00.00	124.65	364.7
145+00.00	142.15	125.7
146+00.00	116.30	41.45
147+00.00	65.13	58.81
148+00.00	0.00	88.11
148+22.36	2.40	74.65
149+00.00	6.45	101.36
150+00.00	4.23	109.51
151+00.00	1.81	95.88
152+00.00	4.08	61.55
153+00.00	5.71	65.76
154+00.00	18.47	48.61
154+00.00	2.38	54.2
156+27.60	2.38	0
RIVER ROAD - STAGE 1 PHASE 1		
24+00.00	54.65	128.12
24+92.12	180.66	375.58
25+45.00	51.55	851.65
TOTALS:		
TEMPORARY DITCH (SOUTH) - STAGE 1 PHASE 1		

IL. RTE. 170 - END AREAS - STAGE 1 PHASE 2

Excavation volumes adjusted by 25% shrinkage factor

STATION	Cut End Areas (sq. ft.)	Fill End Areas (sq. ft.)
IL. RTE. 170 (NORTH) - STAGE 1 PHASE 2		
62+41.06	0.00	0.67
63+47.38	6.30	1.87
64+34.45	21.56	0.63
65+00.00	30.29	0.61
65+65.91	34.65	1.99
66+00.00	41.84	0.57
66+57.73	18.44	1.89
67+00.00	15.13	13.16
67+13.32	5.47	11.27
67+62.59	6.21	44.70
68+00.00	13.21	72.05
68+40.00	11.20	222.84
68+98.37	3.85	352.01
69+00.00	3.78	352.03
69+82.89	3.76	592.78
70+00.00	2.85	445.92
70+83.74	1.04	219.81
71+00.00	1.00	187.44
71+64.00	0.44	50.14
71+98.67	0.36	0.00
DUPONT ROAD - STAGE 1 PHASE 2		
149+00.00	0.00	69.81
150+00.00	0.00	72.12
151+00.00	0.00	35.41
152+00.00	0.00	33.11
153+00.00	0.00	18.11
154+00.00	10.21	0.00

IL. RTE. 170 - END AREAS - STAGE 2 PHASE 1

Excavation volumes adjusted by 25% shrinkage factor

STATION	Cut End Areas (sq. ft.)	Fill End Areas (sq. ft.)
IL. RTE. 170 (NORTH) - STAGE 2 PHASE 1		
64+34.45	26.21	0.00
65+00.00	29.17	0.00
65+65.91	29.50	0.00
IL. RTE. 170 (SOUTH) - STAGE 2 PHASE 1		
89+00.00	73.59	166.25
89+27.19	66.62	248.95
90+00.00	35.78	362.00
90+43.24	13.43	421.93
91+00.00	19.55	151.69
92+00.00	11.14	178.50
93+00.00	20.93	232.26
94+00.00	16.90	110.26
95+00.00	1.95	64.99
96+00.00	19.53	15.82
96+50.00	12.92	0.00
96+85.00	24.64	0.00
97+00.00	21.63	0.00
97+49.49	16.77	1.68
DUPONT ROAD - STAGE 2 PHASE 1		
148+00.00	13.15	84.12
148+22.36	18.71	76.89
149+00.00	22.95	0.22
150+00.00	17.60	1.51
151+00.00	19.78	72.18
152+00.00	20.48	16.09
153+00.00	45.65	10.59
154+00.00	58.78	3.20
154+00.00	52.50	2.38
156+27.60	0.00	2.38
RIVER ROAD - STAGE 2 PHASE 1		
17+50.00	11.18	0.00
18+00.00	19.26	17.77
18+50.00	32.15	70.41
19+00.00	669.00	1.40
19+25.92	769.35	0.77
19+40.00	716.87	3.69
19+50.00	535.01	1.17
20+00.00	919.34	0.53
20+50.00	114.35	0.97
21+00.00	18.57	13.50
21+15.00	15.79	30.72
22+00.00	9.02	149.55
23+00.00	8.93	227.26
23+80.00	11.65	208.32
24+00.00	3.90	0.70

IL. RTE. 170 - END AREAS - STAGE 2 PHASE 2

Excavation volumes adjusted by 25% shrinkage factor

STATION	Cut End Areas (sq. ft.)	Fill End Areas (sq. ft.)
IL. RTE. 170 (NORTH) - STAGE 2 PHASE 2		
62+41.06	0.30	0.47
63+47.38	0.00	6.21
64+34.45	0.70	10.41
65+00.00	0.28	13.13
65+65.91	2.01	3.21
66+00.00	2.18	14.34
66+57.73	0.64	32.92
67+00.00	1.37	38.17
67+13.32	1.36	46.57
67+62.59	0.28	47.43
68+00.00	0.81	127.28
68+40.00	0.67	56.25
68+98.37	6.12	347.61
69+00.00	6.92	307.93
69+82.89	0.00	154.44
70+00.00	0.00	161.69
70+83.74	0.00	257.20
71+00.00	0.00	272.83
71+64.00	0.52	173.45
71+80.67	0.00	239.45
71+93.67	0.00	10.13
71+98.67	160.87	10.13
72+00.00	180.90	20.79
72+24.00	415.00	122.00
72+50.00	63.58	0.00
IL. RTE. 170 (NORTH - UNDER BRIDGE) - STAGE 2 PHASE 2		
72+50.00		
73+00.00		
73+50.00		
74+00.00		
74+50.00		
75+00.00		
75+50.00		
76+00.00		
76+50.00		
ACCESS DRIVEWAY - STAGE 2 PHASE 2		
1+50.00	0.49	77.34
1+91.88	0.64	41.02
2+00.00	0.66	32.02
2+15.42	2.42	19.91
2+94.22	0.39	16.42
3+00.00	0.87	11.51
3+55.00	0.79	9.69
4+00.00	3.05	14.57
4+61.84	25.48	1.49
RIVER ROAD - STAGE 2 PHASE 2		
17+50.00	11.34	0.00
18+00.00	12.05	1.68
18+50.00	12.57	5.57
19+00.00	19.60	21.65
19+25.92	39.16	18.65
19+40.00	107.67	3.42
19+50.00	116.16	1.50
20+00.00	119.87	4.09
20+50.00	17.88	4.79
21+00.00	0.00	32.81
21+15.00	6.64	87.46
22+00.00	127.12	64.57
23+00.00	71.37	31.29
23+80.00	57.53	9.38
24+00.00	2.97	3.57
IL. RTE. 170 (SOUTH) - STAGE 2 PHASE 2		
94+00.00	2.76	0.00
95+00.00	8.91	0.88
96+00.00	4.09	6.25
96+50.00	6.41	0.00
96+85.00	7.89	0.34
97+00.00	7.86	0.00
97+49.49	7.93	0.00

IL. RTE. 170 - END AREAS - STAGE 3 PHASE 1

Excavation volumes adjusted by 25% shrinkage factor

STATION	Cut End Areas (sq. ft.)	Fill End Areas (sq. ft.)
IL. RTE. 170 (NORTH) - STAGE 3 PHASE 1		
63+47.38	0.45	0.00
64+34.45	2.55	1.63
65+00.00	2.62	3.97
65+65.91	2.50	15.02
66+00.00	1.08	15.49
66+57.73	2.04	2.11
67+00.00	0.19	18.25
67+13.32	3.72	4.94
67+62.59	19.12	3.63
68+00.00	23.36	3.62
68+40.00	23.52	3.62
68+98.37	10.78	6.69
69+00.00	10.25	6.85
69+82.89	9.94	18.68
70+00.00	9.87	80.11
70+83.74	8.77	99.22
71+00.00	7.49	116.56
71+64.00	14.95	188.87
71+80.67	0.00	216.57
71+93.67	0.00	80.22
71+98.67	18.90	80.22
72+00.00	18.88	0.00
IL. RTE. 170 (SOUTH) - STAGE 3 PHASE 1		
82+26.91	10.71	0
83+00.00	67.36	0
84+00.00	77.97	0
85+00.00	140.38	0
86+00.00	320.01	0
87+00.00	587.90	0
88+65.00	117.00	0.00
88+92.51	75.56	147.32
94+00.00	35.34	10.19
95+00.00	82.17	6.00
96+00.00	121.83	8.04
96+50.00	49.08	4.11
96+85.00	53.06	5.78
97+00.00	40.27	6.13
97+49.49	2.51	24.31
97+73.55	1.87	25.06
98+00.00	1.51	47.41
99+00.00	1.51	32.86
100+00.00	1.17	0.00
TEMPORARY DITCH (SOUTH) - STAGE 3 PHASE 1		

REVISIONS NAME	DATE

ILLINOIS DEPARTMENT OF TRANSPORTATION

MOT CROSS-SECTIONS
EARTHWORK END AREAS

SCALE: N.T.S. DRAWN BY REB
DATE OCTOBER, 2007 CHECKED BY MXF

PLOT DATE = Oct 28, 2007 - 11:01:26 AM
FILE NAME = c:\pw_work\pw_1\ne85702\consult\phase 2\usecoutfill.dgn
PLOT SCALE = 1.0000 ' / IN.
USER NAME = schwerkerg

CONTRACT NO. 66607

F.A.P. RTE.	SECTION	COUNTY	TOTAL SHEETS	SHEET NO.
786	(109) BR	LASALLE	351	161
STA. 61+50		TO STA. 100+00		
FED. ROAD DIST. NO.	ILLINOIS	FED. AID PROJECT		

EarthTech
A Tyco International Ltd. Company

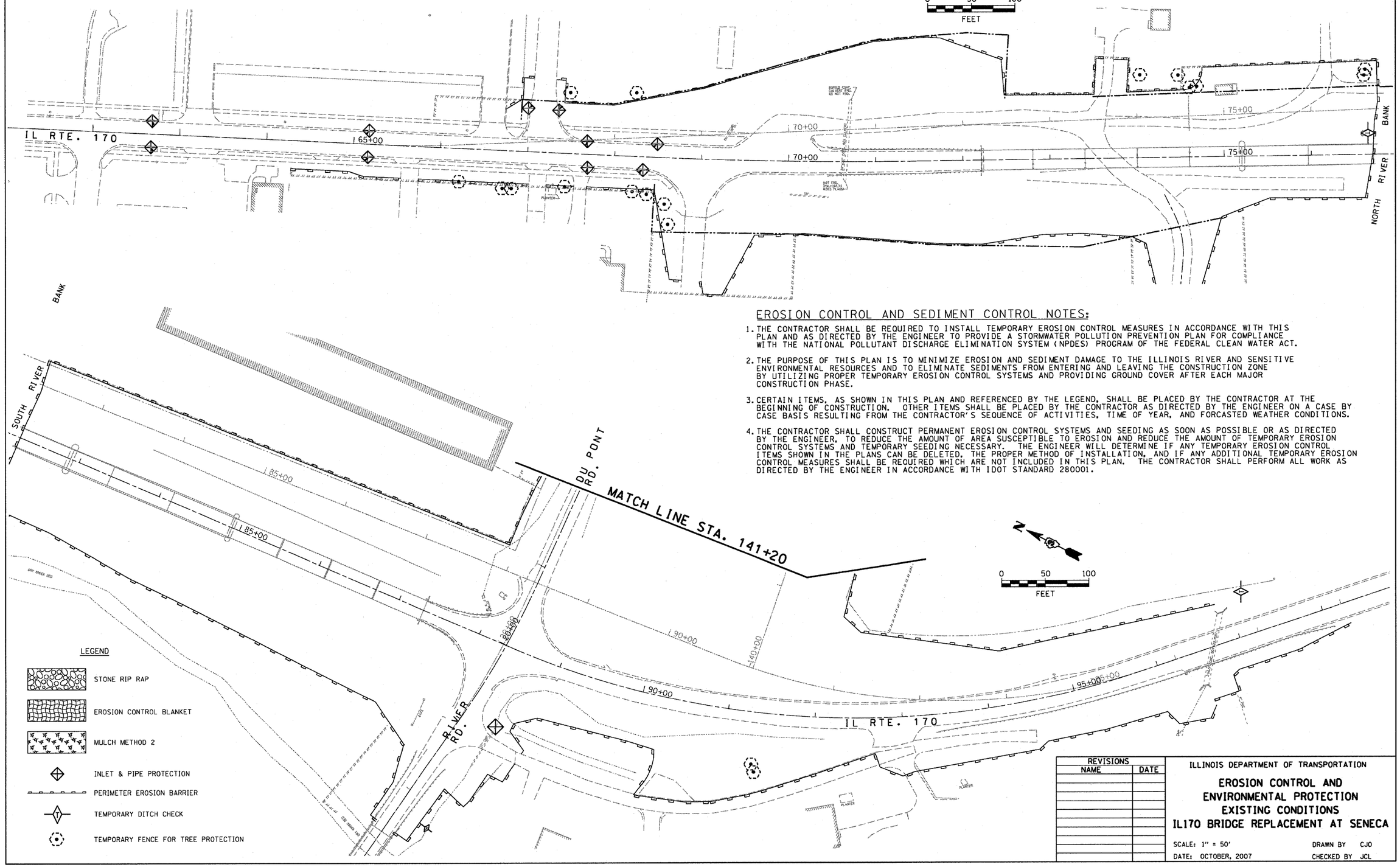

EROSION CONTROL AND SEDIMENT CONTROL NOTES:

1. THE CONTRACTOR SHALL BE REQUIRED TO INSTALL TEMPORARY EROSION CONTROL MEASURES IN ACCORDANCE WITH THIS PLAN AND AS DIRECTED BY THE ENGINEER TO PROVIDE A STORMWATER POLLUTION PREVENTION PLAN FOR COMPLIANCE WITH THE NATIONAL POLLUTANT DISCHARGE ELIMINATION SYSTEM (NPDES) PROGRAM OF THE FEDERAL CLEAN WATER ACT.

2. THE PURPOSE OF THIS PLAN IS TO MINIMIZE EROSION AND SEDIMENT DAMAGE TO THE ILLINOIS RIVER AND SENSITIVE ENVIRONMENTAL RESOURCES AND TO ELIMINATE SEDIMENTS FROM ENTERING AND LEAVING THE CONSTRUCTION ZONE BY UTILIZING PROPER TEMPORARY EROSION CONTROL SYSTEMS AND PROVIDING GROUND COVER AFTER EACH MAJOR CONSTRUCTION PHASE.

3. CERTAIN ITEMS, AS SHOWN IN THIS PLAN AND REFERENCED BY THE LEGEND, SHALL BE PLACED BY THE CONTRACTOR AT THE BEGINNING OF CONSTRUCTION. OTHER ITEMS SHALL BE PLACED BY THE CONTRACTOR AS DIRECTED BY THE ENGINEER ON A CASE BY CASE BASIS RESULTING FROM THE CONTRACTOR'S SEQUENCE OF ACTIVITIES, TIME OF YEAR, AND FORCASTED WEATHER CONDITIONS.

4. THE CONTRACTOR SHALL CONSTRUCT PERMANENT EROSION CONTROL SYSTEMS AND SEEDING AS SOON AS POSSIBLE OR AS DIRECTED BY THE ENGINEER, TO REDUCE THE AMOUNT OF AREA SUSCEPTIBLE TO EROSION AND REDUCE THE AMOUNT OF TEMPORARY EROSION CONTROL SYSTEMS AND TEMPORARY SEEDING NECESSARY. THE ENGINEER WILL DETERMINE IF ANY TEMPORARY EROSION CONTROL ITEMS SHOWN IN THE PLANS CAN BE DELETED, THE PROPER METHOD OF INSTALLATION, AND IF ANY ADDITIONAL TEMPORARY EROSION CONTROL MEASURES SHALL BE REQUIRED WHICH ARE NOT INCLUDED IN THIS PLAN. THE CONTRACTOR SHALL PERFORM ALL WORK AS DIRECTED BY THE ENGINEER IN ACCORDANCE WITH IDOT STANDARD 280001.

LEGEND

- STONE RIP RAP
- EROSION CONTROL BLANKET
- MULCH METHOD 2
- INLET & PIPE PROTECTION
- PERIMETER EROSION BARRIER
- TEMPORARY DITCH CHECK
- TEMPORARY FENCE FOR TREE PROTECTION

REVISIONS	
NAME	DATE

ILLINOIS DEPARTMENT OF TRANSPORTATION

EROSION CONTROL AND ENVIRONMENTAL PROTECTION EXISTING CONDITIONS IL170 BRIDGE REPLACEMENT AT SENECA

SCALE: 1" = 50' DRAWN BY CJO

DATE: OCTOBER, 2007 CHECKED BY JCL

PLOT DATE = 10/4/2007
FILE NAME = $FILEL$
PLOT SCALE = $SCALE$
USER NAME = project

CONTRACT NO. 66607

EarthTech
A Tyco International Ltd. Company

F.A.P. RTE.	SECTION	COUNTY	TOTAL SHEETS	SHEET NO.
786	(109) BR	LASALLE	351	162
STA. 61+50		TO STA. 100+00		
FED. ROAD DIST. NO.	ILLINOIS	FED. AID PROJECT		

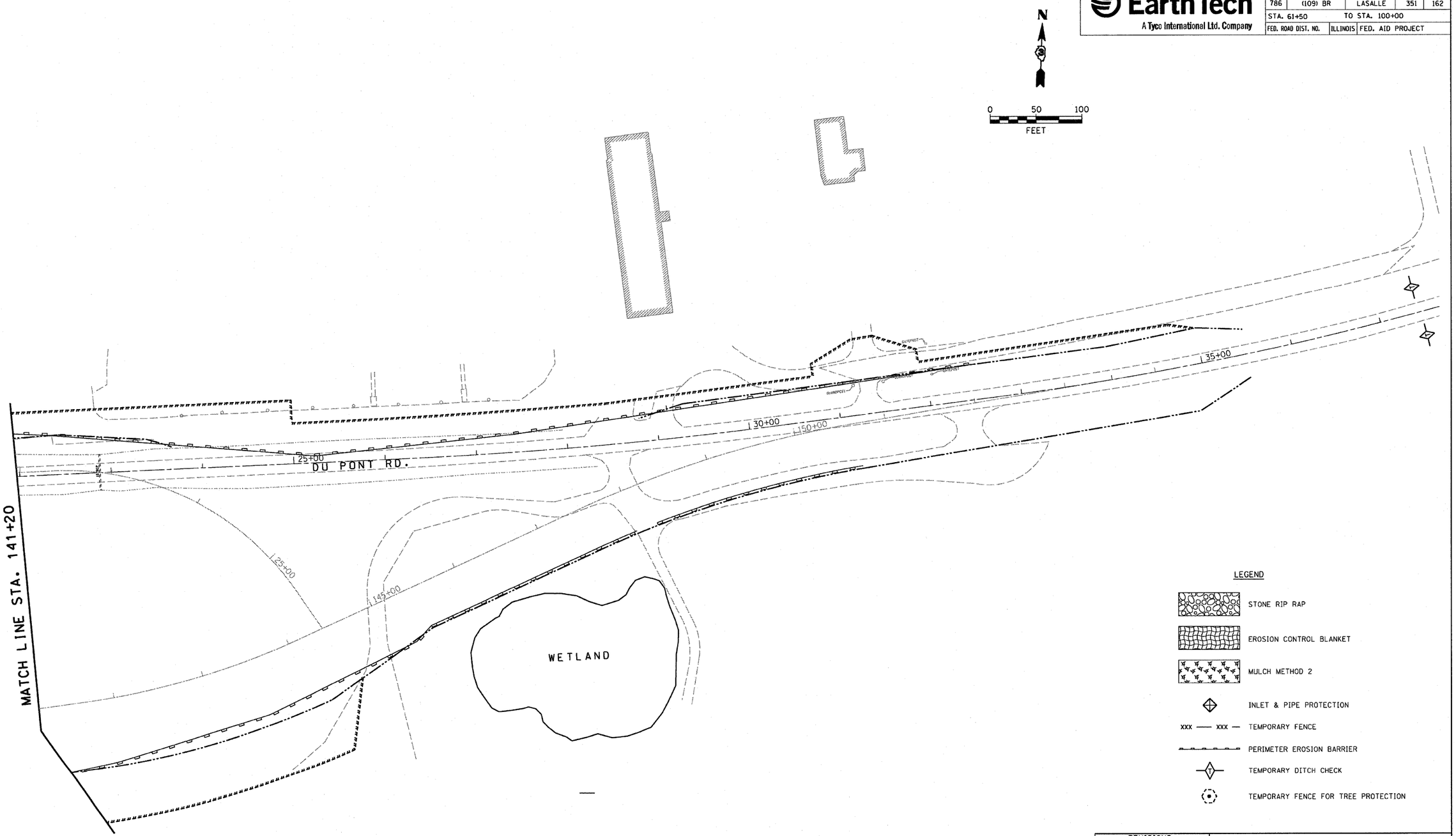

LEGEND

- STONE RIP RAP
- EROSION CONTROL BLANKET
- MULCH METHOD 2
- INLET & PIPE PROTECTION
- xxx —— xxx — TEMPORARY FENCE
- PERIMETER EROSION BARRIER
- TEMPORARY DITCH CHECK
- TEMPORARY FENCE FOR TREE PROTECTION

REVISIONS	
NAME	DATE

ILLINOIS DEPARTMENT OF TRANSPORTATION

EROSION CONTROL AND ENVIRONMENTAL PROTECTION EXISTING CONDITIONS IL 170 BRIDGE REPLACEMENT AT SENECA

SCALE: 1" = 50'
DATE: OCTOBER, 2007

DRAWN BY CJO
CHECKED BY JCL

PLOT DATE = 10/4/2007
FILE NAME = ##FILE$
PLOT SCALE = ##SCALE$
USER NAME = project

CONTRACT NO. 66607

F.A.P. RTE.	SECTION	COUNTY	TOTAL SHEETS	SHEET NO.
786	(109) BR	LASALLE	351	163
STA. 61+50		TO STA. 100+00		
FED. ROAD DIST. NO.	ILLINOIS	FED. AID PROJECT		

EarthTech
A Tyco International Ltd. Company

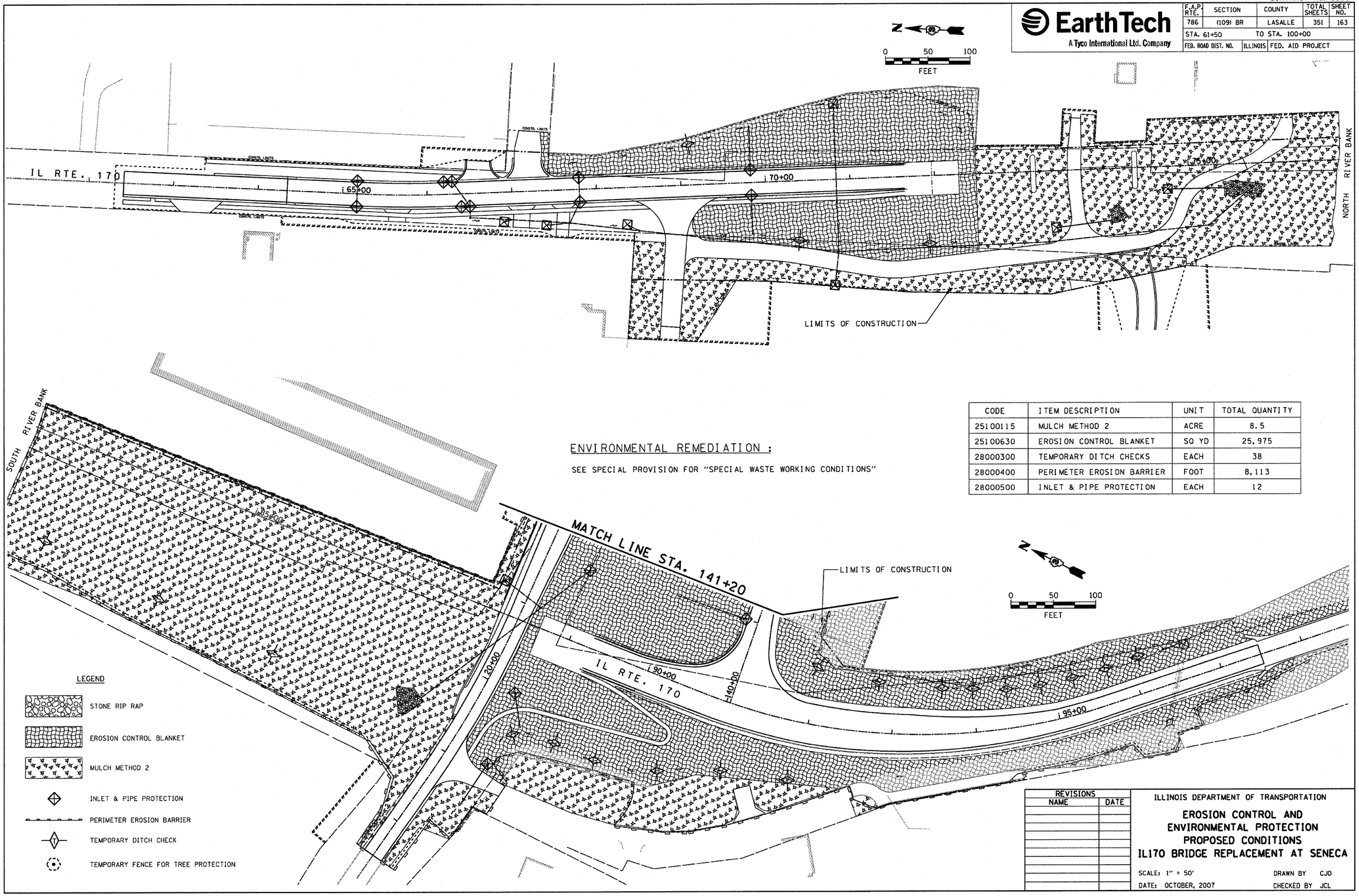

ENVIRONMENTAL REMEDIATION :

SEE SPECIAL PROVISION FOR "SPECIAL WASTE WORKING CONDITIONS"

CODE	ITEM DESCRIPTION	UNIT	TOTAL QUANTITY
25100115	MULCH METHOD 2	ACRE	8.5
25100630	EROSION CONTROL BLANKET	SQ YD	25,975
28000300	TEMPORARY DITCH CHECKS	EACH	38
28000400	PERIMETER EROSION BARRIER	FOOT	8,113
28000500	INLET & PIPE PROTECTION	EACH	12

REVISIONS	
NAME	DATE

ILLINOIS DEPARTMENT OF TRANSPORTATION

EROSION CONTROL AND ENVIRONMENTAL PROTECTION PROPOSED CONDITIONS IL170 BRIDGE REPLACEMENT AT SENECA

SCALE: 1" = 50'
DATE: OCTOBER, 2007
DRAWN BY CJO
CHECKED BY JCL

PLOT DATE = 10/4/2007
FILE NAME = $FILEL$
PLOT SCALE = $SCALE$
USER NAME = project

CONTRACT NO. 66607

EarthTech
A Tyco International Ltd. Company

F.A.P. RTE.	SECTION	COUNTY	TOTAL SHEETS	SHEET NO.
786	(109) BR	LASALLE	351	164
STA. 61+50		TO STA. 100+00		
FED. ROAD DIST. NO.	ILLINOIS	FED. AID PROJECT		

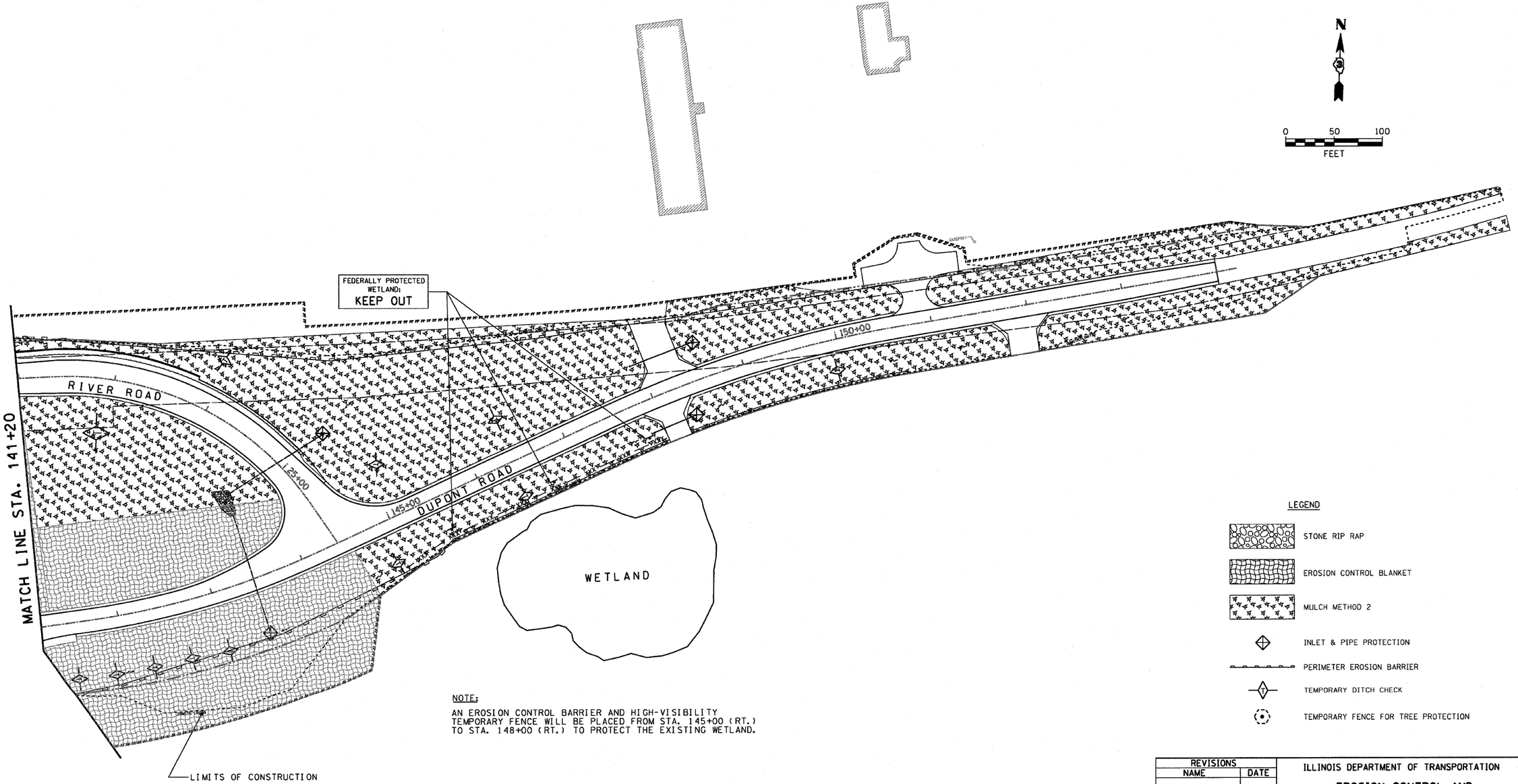

NOTE:

AN EROSION CONTROL BARRIER AND HIGH-VISIBILITY TEMPORARY FENCE WILL BE PLACED FROM STA. 145+00 (RT.) TO STA. 148+00 (RT.) TO PROTECT THE EXISTING WETLAND.

LEGEND

- STONE RIP RAP
- EROSION CONTROL BLANKET
- MULCH METHOD 2
- INLET & PIPE PROTECTION
- PERIMETER EROSION BARRIER
- TEMPORARY DITCH CHECK
- TEMPORARY FENCE FOR TREE PROTECTION

REVISIONS	
NAME	DATE

ILLINOIS DEPARTMENT OF TRANSPORTATION

EROSION CONTROL AND ENVIRONMENTAL PROTECTION PROPOSED CONDITIONS IL170 BRIDGE REPLACEMENT AT SENECA

SCALE: 1" = 50' DRAWN BY CJO

DATE: OCTOBER, 2007 CHECKED BY JCL

PLOT DATE = 10/4/2007
FILE NAME = $FILE$
PLOT SCALE = $SCALE$
USER NAME = project

SW 1/4 SEC. 25, T. 33 N., R. 5 E. OF 3RD P.M.

165

PARCEL 3SA0006

SENECA COMMUNITY CONSOLIDATED GRADE SCHOOL DISTRICT NO. 170

TOTAL HOLDING 12.269 AC.±
TEMPORARY EASEMENT 0.056 AC.± (2,445 SQ. FT.)
PURPOSE: DRIVEWAY RECONSTRUCTION, SHAPING & GRADING

FROM NW COR. SW 1/4 SEC. 25-33-5 TO P.O.B.

6-TE	NW COR. SW 1/4 TO 1	S.2°17'19"E.	502.73'
	1 TO P.O.B. 6-TE	N.88°33'31"E.	33.00'
VAC	NW COR. SW 1/4 TO 1	S.2°17'19"E.	502.73'
7	NW COR. SW 1/4 TO 4	S.2°17'19"E.	552.73'
7-TE & 8-TE	NW COR. SW 1/4 TO 5	S.2°17'19"E.	1157.05'
	5 TO 6	N.88°10'54"E.	89.27'
8	NW COR. SW 1/4 TO 5	S.2°17'19"E.	1157.05'
9	NW COR. SW 1/4 TO 17	S.2°17'19"E.	1357.06'
9-TE	NW COR. SW 1/4 TO 17	S.2°17'19"E.	1357.06'
	17 TO 16	N.88°10'54"E.	106.36'

PARCEL 3SA0007

JAMES E. CLAGGETT, et al.

TOTAL HOLDING = 6.025 AC.±
TOTAL R.O.W. REQUIRED = 1.453 AC.±
AREA IN EXIST. R.O.W. = 0.878 AC.±
NET R.O.W. REQUIRED 0.585 AC.±
REMAINDER = 4.566 AC.±
TEMPORARY EASEMENT 0.011 AC.± (482 SQ. FT.)
PURPOSE: DRIVEWAY RECONSTRUCTION, SHAPING & GRADING

PAR. 7-TE

PT. TO PT.		BEARING	DIST.
6	7	N.5°22'04"W.	100.82'
7	8	N.88°14'47"E.	4.75'
8	9	S.5°24'40"E.	100.82'
9	6	S.88°10'54"W.	4.83'

PARCEL 3SA0008

JAMES E. CLAGGETT, et ux.

TOTAL HOLDING = 1.247 AC.±
TOTAL R.O.W. REQUIRED = 0.449 AC.± (19,563 SQ. FT.)
AREA IN EXIST. R.O.W. = 0.366 AC.± (15,957 SQ. FT.)
NET R.O.W. REQUIRED 0.083 AC.± (3,606 SQ. FT.)
REMAINDER = 0.798 AC.±
TEMPORARY EASEMENT 0.140 AC.± (6,115 SQ. FT.)
PURPOSE: DRIVEWAY RECONSTRUCTION, SHAPING & GRADING

PAR. 8-TE

PT. TO PT.		BEARING	DIST.
6	10	N.88°10'54"E.	69.11'
10	11	S.2°45'37"E.	39.50'
11	12	S.87°36'50"W.	60.21'
12	13	S.7°06'59"E.	60.20'
13	14	N.88°10'54"E.	25.11'
14	15	S.7°06'59"E.	100.43'
15	16	S.88°10'54"W.	30.75'
16	6	N.7°10'13"W.	200.88'

PARCEL 3SA0009

THE SENECA BOAT CLUB

TOTAL HOLDING = 1.155 AC.±
TOTAL R.O.W. REQUIRED = 0.328 AC.± (14,267 SQ. FT.)
AREA IN EXIST. R.O.W. = 0.217 AC.± (9,461 SQ. FT.)
NET R.O.W. REQUIRED = 0.111 AC.± (4,806 SQ. FT.)
REMAINDER = 0.827 AC.±
TEMPORARY EASEMENT = 0.089 AC.± (3,887 SQ. FT.)
PURPOSE: DRIVEWAY RECONSTRUCTION, SHAPING & GRADING

PAR. 9-TE

PT. TO PT.		BEARING	DIST.
16	15	N.88°10'54"E.	30.75'
15	18	S.7°06'59"E.	125.81'
18	19	S.82°58'17"W.	30.50'
19	16	N.7°10'13"W.	128.60'

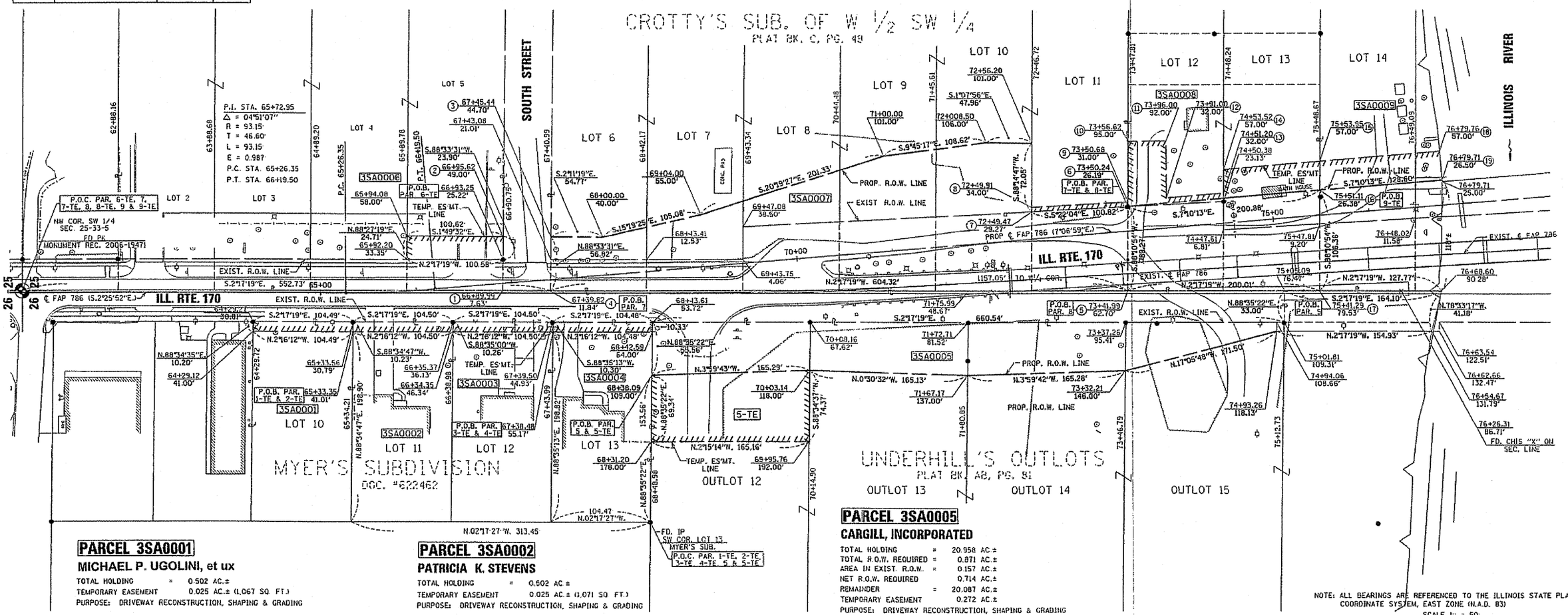

PARCEL 3SA0001

MICHAEL P. UGOLINI, et ux

TOTAL HOLDING = 0.502 AC.±
TEMPORARY EASEMENT 0.025 AC.± (1,067 SQ. FT.)
PURPOSE: DRIVEWAY RECONSTRUCTION, SHAPING & GRADING

PARCEL 3SA0002

PATRICIA K. STEVENS

TOTAL HOLDING = 0.502 AC.±
TEMPORARY EASEMENT 0.025 AC.± (1,071 SQ. FT.)
PURPOSE: DRIVEWAY RECONSTRUCTION, SHAPING & GRADING

PARCEL 3SA0005

CARGILL, INCORPORATED

TOTAL HOLDING = 20.958 AC.±
TOTAL R.O.W. REQUIRED = 0.871 AC.±
AREA IN EXIST. R.O.W. = 0.157 AC.±
NET R.O.W. REQUIRED 0.714 AC.±
REMAINDER = 20.087 AC.±
TEMPORARY EASEMENT 0.272 AC.±
PURPOSE: DRIVEWAY RECONSTRUCTION, SHAPING & GRADING

NOTE: ALL BEARINGS ARE REFERENCED TO THE ILLINOIS STATE PLANE COORDINATE SYSTEM, EAST ZONE (N.A.D. 83)

SCALE 1" = 50'

0' 25' 50' 75' 100' 150' 200'

I VINCENT D. BRANDOW, HEREBY CERTIFY THAT I AM A PROFESSIONAL LAND SURVEYOR OF THE STATE OF ILLINOIS, THAT THE SURVEY OF PROPOSED F.A.P. 786 (ILLINOIS 170) WAS MADE BY RENWICK & ASSOCIATES, INC. UNDER MY DIRECTION, AND THAT THE SURVEY IS TRUE AND COMPLETE AS SHOWN TO THE BEST OF MY KNOWLEDGE AND BELIEF, THAT ALL MONUMENTS AND MARKS ARE OF THE CHARACTER AND OCCUPY THE POSITION SHOWN THEREON, AND ARE SUFFICIENT TO ENABLE THE SURVEY TO BE RETRACED. THIS PROFESSIONAL SERVICE CONFORMS TO THE CURRENT ILLINOIS MINIMUM STANDARDS FOR A BOUNDARY SURVEY.

DATE:

ILLINOIS PROFESSIONAL LAND SURVEYOR
NO. 2655

11-30-08

SURVEY BOOK NO. _____

PARCEL 3SA0003

TIMOTHY C. McGEORGE, et ux.

TOTAL HOLDING = 0.502 AC.±
TEMPORARY EASEMENT 0.025 AC.± (1,074 SQ. FT.)
PURPOSE: DRIVEWAY RECONSTRUCTION, SHAPING & GRADING

PARCEL 3SA0004

RONALD T. SHEEDY, et al. TRUSTEES

TOTAL HOLDING = 0.502 AC.±
TEMPORARY EASEMENT 0.025 AC.± (1,078 SQ. FT.)
PURPOSE: DRIVEWAY RECONSTRUCTION, SHAPING & GRADING

SE 1/4 SEC. 26, T. 33 N., R. 5 E. OF 3RD P.M.

6-1-07

RIGHT OF WAY PLANS

ROUTE	FAP 786 (IL 170)
SECTION	109BR
PROJECT	ILLINOIS RIVER BRIDGE AT SENICA
COUNTY	LASALLE
JOB NUMBER	R-93-012-02
STATION 64+00	TO 77+00

SW 1/4 SEC. 25, T. 33 N., R. 5 E. OF 3RD P.M.

NW 1/4 SEC. 36, T. 33 N., R. 5 E. OF 3RD P.M.

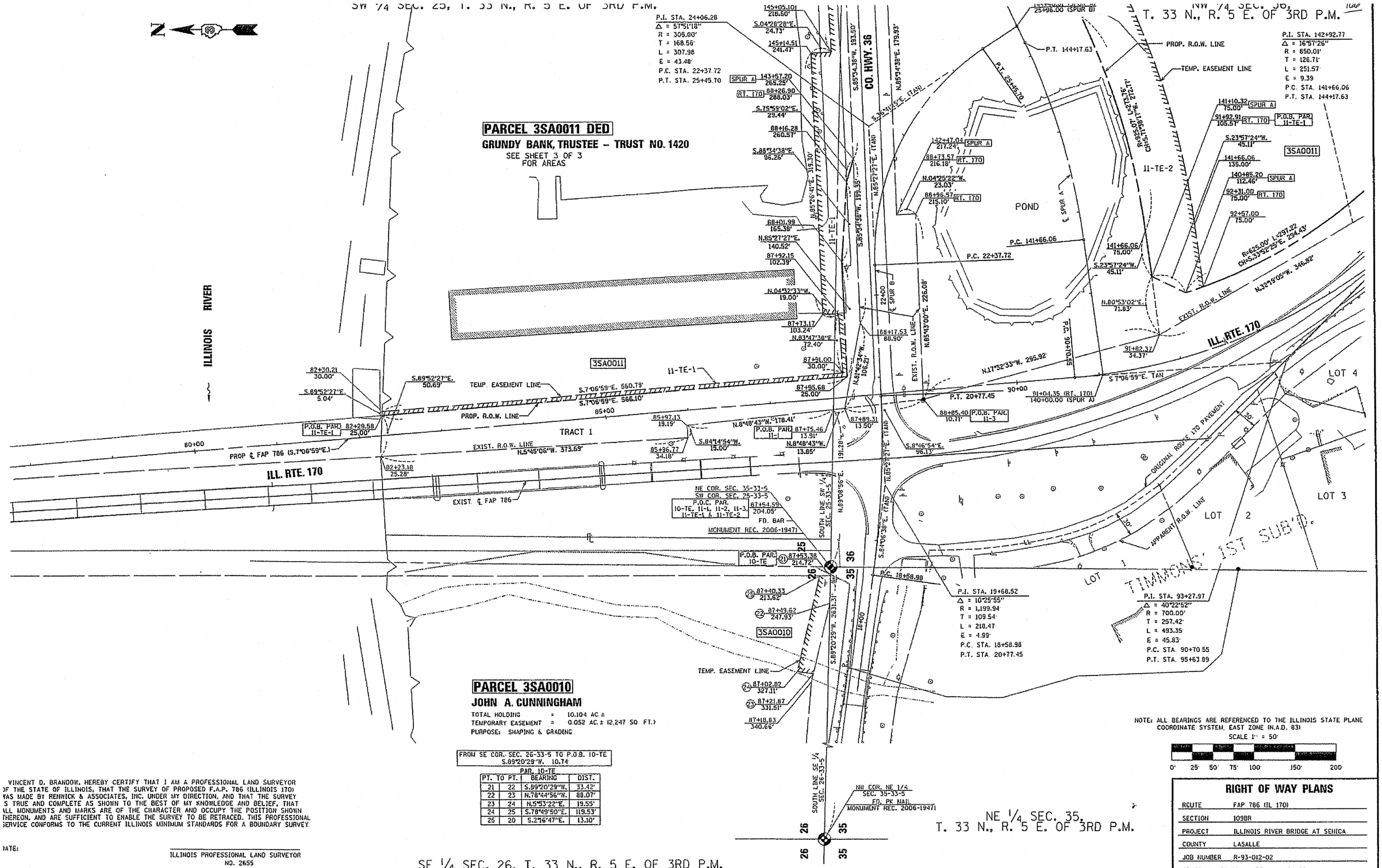

I, VINCENT D. BRANDOW, HEREBY CERTIFY THAT I AM A PROFESSIONAL LAND SURVEYOR OF THE STATE OF ILLINOIS, THAT THE SURVEY OF PROPOSED F.A.P. 786 (ILLINOIS 170) WAS MADE BY RENWICK & ASSOCIATES, INC. UNDER MY DIRECTION, AND THAT THE SURVEY IS TRUE AND COMPLETE AS SHOWN TO THE BEST OF MY KNOWLEDGE AND BELIEF, THAT ALL MONUMENTS AND MARKS ARE OF THE CHARACTER AND OCCUPY THE POSITION SHOWN THEREON, AND ARE SUFFICIENT TO ENABLE THE SURVEY TO BE RETRACED. THIS PROFESSIONAL SERVICE CONFORMS TO THE CURRENT ILLINOIS MINIMUM STANDARDS FOR A BOUNDARY SURVEY.

DATE:

SURVEY BOOK NO. _____

ILLINOIS PROFESSIONAL LAND SURVEYOR
NO. 2655
11-30-06

SE 1/4 SEC. 26, T. 33 N., R. 5 E. OF 3RD P.M.

NE 1/4 SEC. 35, T. 33 N., R. 5 E. OF 3RD P.M.

RIGHT OF WAY PLANS

ROUTE	FAP 786 (IL 170)
SECTION	109BR
PROJECT	ILLINOIS RIVER BRIDGE AT SENICA
COUNTY	LASALLE
JOB NUMBER	R-93-012-02
STATION	78+00 TO 94+00

SW 1/4 SEC. 25, T. 33 N., R. 5 E. OF 3RD P.M.

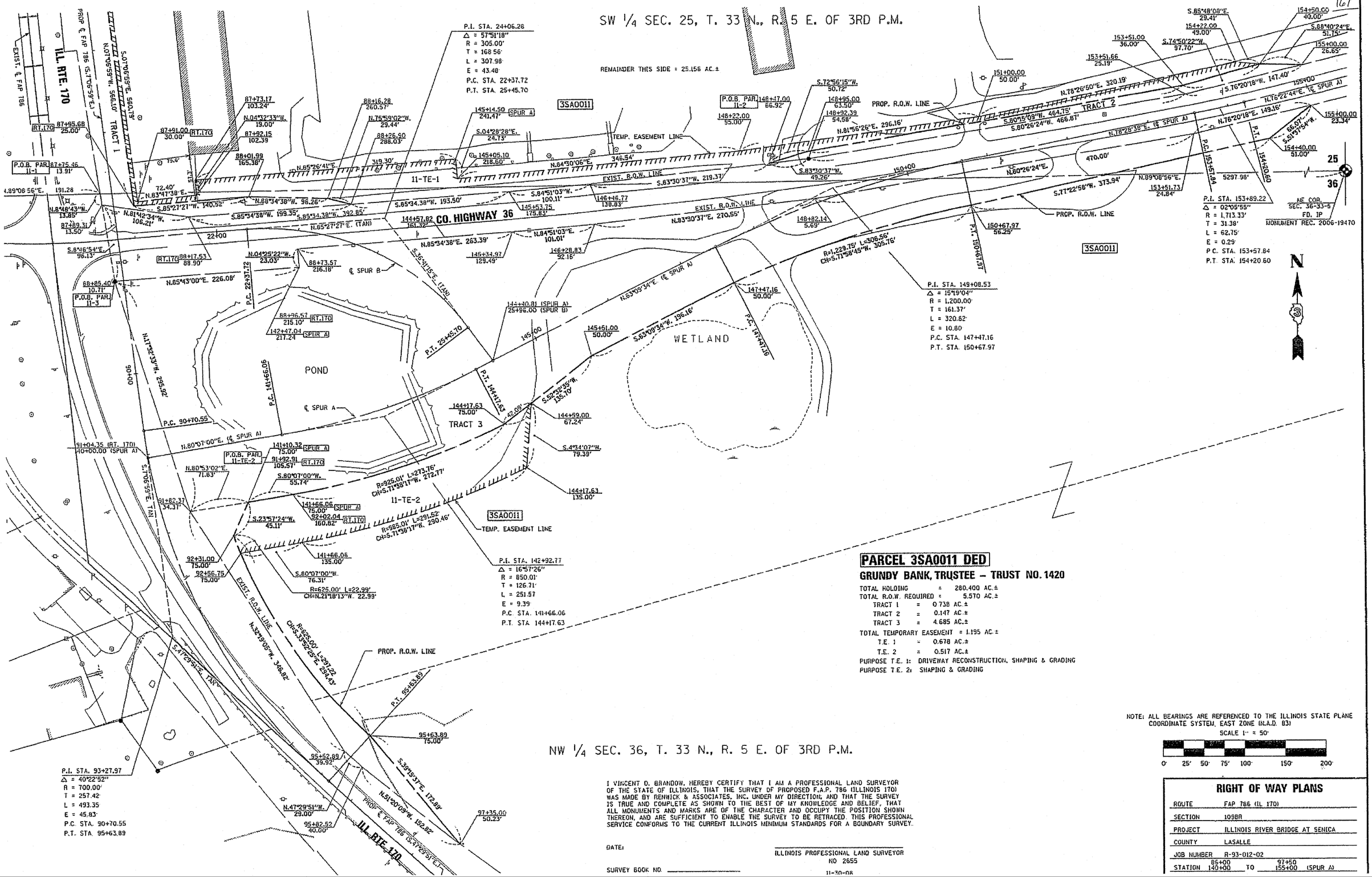

NW 1/4 SEC. 36, T. 33 N., R. 5 E. OF 3RD P.M.

PARCEL 3SA0011 DED

GRUNDY BANK, TRUSTEE – TRUST NO. 1420

TOTAL HOLDING = 280.400 AC.±
TOTAL R.O.W. REQUIRED = 5.570 AC.±
TRACT 1 = 0.738 AC.±
TRACT 2 = 0.147 AC.±
TRACT 3 = 4.685 AC.±
TOTAL TEMPORARY EASEMENT = 1.195 AC.±
T.E. 1 = 0.678 AC.±
T.E. 2 = 0.517 AC.±
PURPOSE T.E. 1: DRIVEWAY RECONSTRUCTION, SHAPING & GRADING
PURPOSE T.E. 2: SHAPING & GRADING

I VINCENT D. BRANDOW, HEREBY CERTIFY THAT I AM A PROFESSIONAL LAND SURVEYOR OF THE STATE OF ILLINOIS, THAT THE SURVEY OF PROPOSED F.A.P. 786 (ILLINOIS 170) WAS MADE BY RENWICK & ASSOCIATES, INC. UNDER MY DIRECTION, AND THAT THE SURVEY IS TRUE AND COMPLETE AS SHOWN TO THE BEST OF MY KNOWLEDGE AND BELIEF, THAT ALL MONUMENTS AND MARKS ARE OF THE CHARACTER AND OCCUPY THE POSITION SHOWN THEREON, AND ARE SUFFICIENT TO ENABLE THE SURVEY TO BE RETRACED. THIS PROFESSIONAL SERVICE CONFORMS TO THE CURRENT ILLINOIS MINIMUM STANDARDS FOR A BOUNDARY SURVEY.

DATE: _____

ILLINOIS PROFESSIONAL LAND SURVEYOR
NO. 2655
11-30-08

SURVEY BOOK NO. _____

NOTE: ALL BEARINGS ARE REFERENCED TO THE ILLINOIS STATE PLANE COORDINATE SYSTEM, EAST ZONE (N.A.D. 83)

SCALE 1" = 50'

0' 25' 50' 75' 100' 150' 200'

RIGHT OF WAY PLANS

ROUTE	FAP 786 (IL 170)
SECTION	109BR
PROJECT	ILLINOIS RIVER BRIDGE AT SENICA
COUNTY	LASALLE
JOB NUMBER	R-93-012-02
STATION	86+00 / 140+00 TO 97+50 / 155+00 (SPUR A)

CONTRACT NO. 66607

F.A.P. RTE.	SECTION	COUNTY	TOTAL SHEETS	SHEET NO.
786	(109) BR	LASALLE	351	168
STA. 61+50		TO STA. 100+00		
FED. ROAD DIST. NO.	ILLINOIS	FED. AID PROJECT		

EarthTech
A Tyco International Ltd. Company

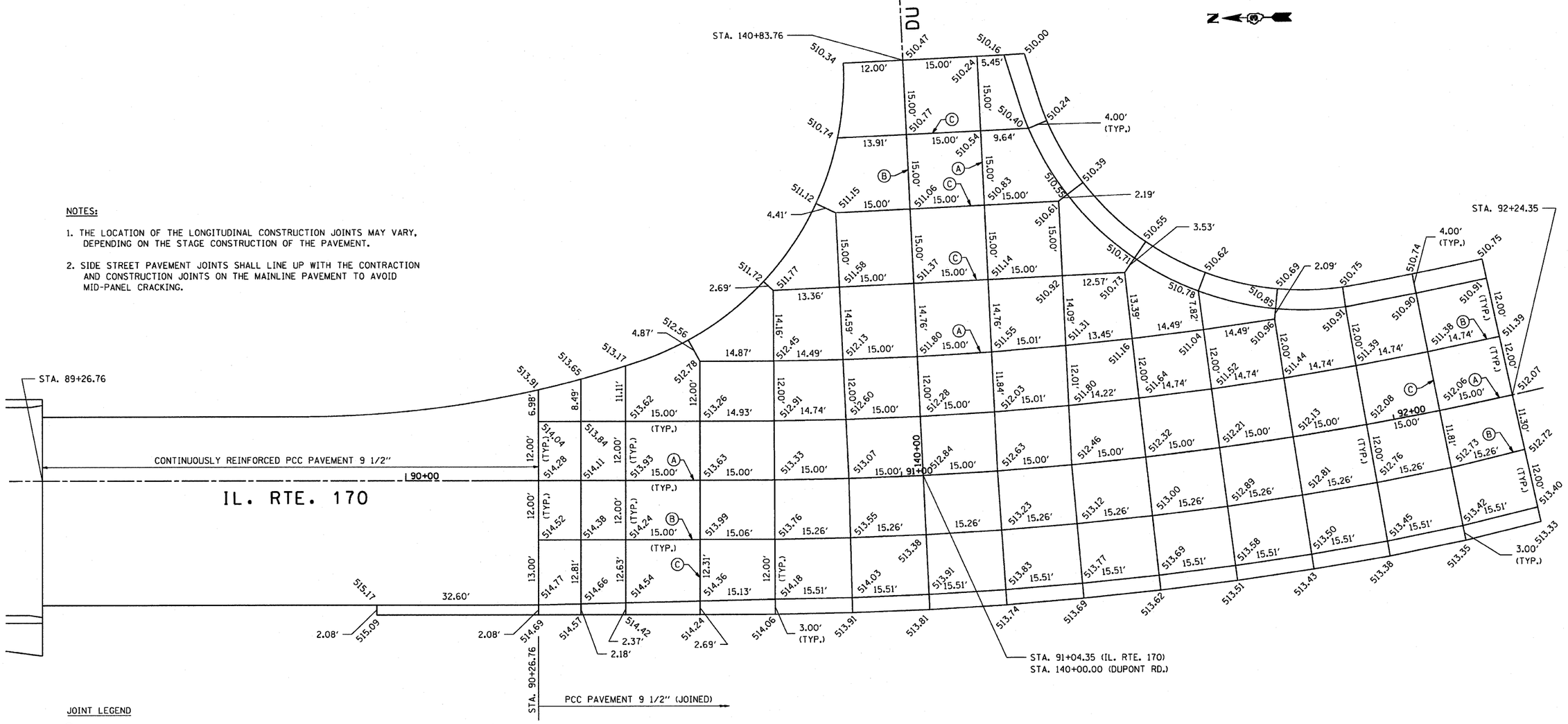

NOTES:

1. THE LOCATION OF THE LONGITUDINAL CONSTRUCTION JOINTS MAY VARY, DEPENDING ON THE STAGE CONSTRUCTION OF THE PAVEMENT.

2. SIDE STREET PAVEMENT JOINTS SHALL LINE UP WITH THE CONTRACTION AND CONSTRUCTION JOINTS ON THE MAINLINE PAVEMENT TO AVOID MID-PANEL CRACKING.

JOINT LEGEND

(A) LONGITUDINAL CONSTRUCTION JOINT WITH 24" GROUTED-IN-PLACE No. 6 TIE BARS AT 24" CENTERS

(B) SAWED LONGITUDINAL JOINT WITH 30" No. 6 TIE BARS AT 30" CENTERS

(C) SAWED TRANSVERSE CONTRACTION JOINT WITH 18" DOWEL BARS AT 12" CENTERS

REVISIONS	
NAME	DATE

ILLINOIS DEPARTMENT OF TRANSPORTATION

INTERSECTION GRADING AND JOINT PLAN
IL 170 AND DU PONT ROAD

SCALE: 1" = 10'
DATE: OCTOBER, 2007

DRAWN BY CJO
CHECKED BY JCL

PLOT DATE = 10/4/2007
FILE NAME = $FILEL$
PLOT SCALE = $SCALE$
USER NAME = project

CONTRACT NO. 66607

EarthTech
A Tyco International Ltd. Company

F.A.P. RTE.	SECTION	COUNTY	TOTAL SHEETS	SHEET NO.
786	(109) BR	LASALLE	351	169
STA. 61+50		TO STA. 67+00		
FED. ROAD DIST. NO.	ILLINOIS	FED. AID PROJECT		

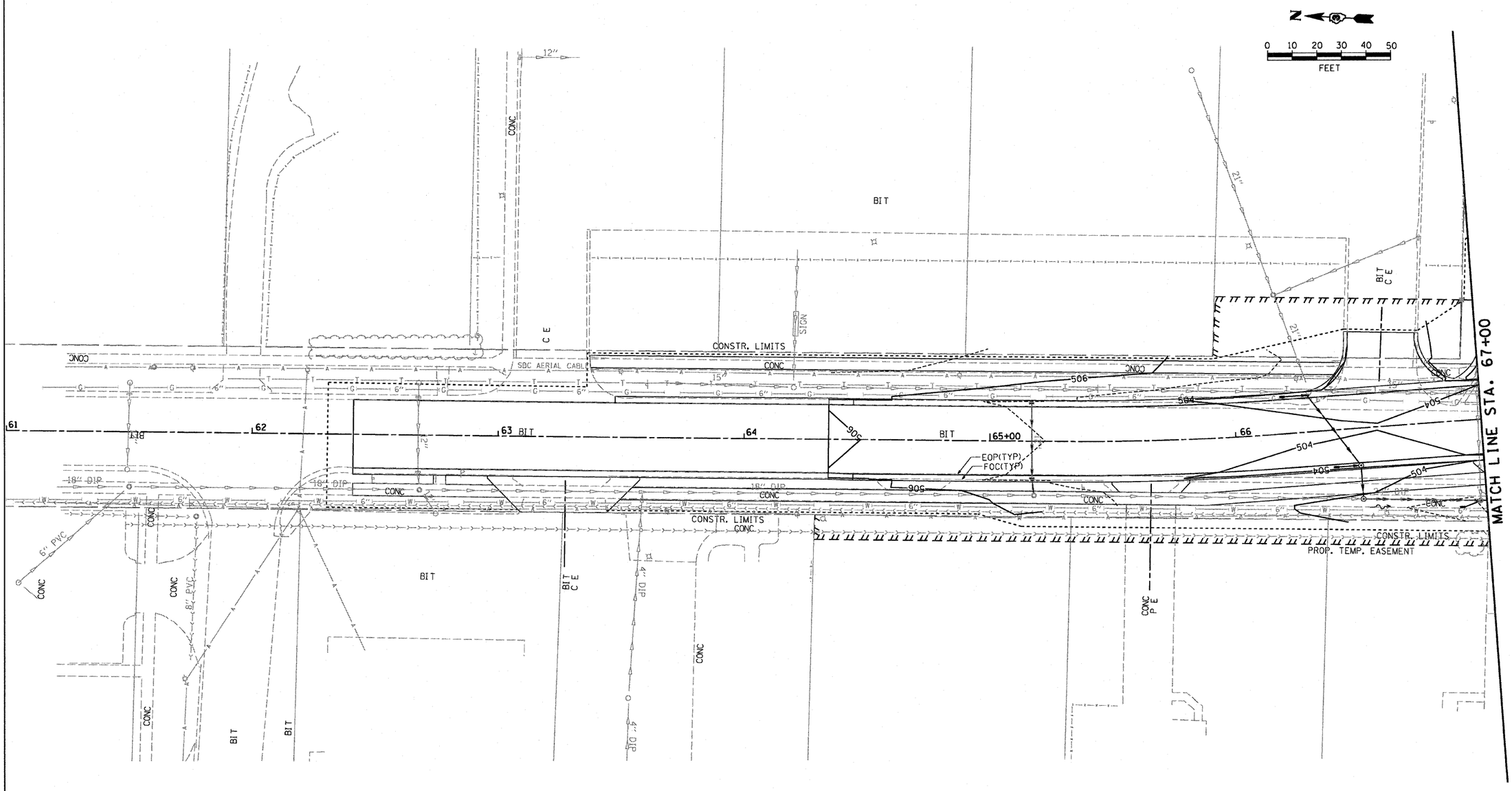

REVISIONS	
NAME	DATE

ILLINOIS DEPARTMENT OF TRANSPORTATION

GRADING PLAN
STA. 61+50 TO STA. 67+00

SCALE: 1" = 20'
DATE: OCTOBER, 2007

DRAWN BY CJO
CHECKED BY JCL

PLOT DATE = 10/4/2007
FILE NAME = $FILEL$
PLOT SCALE = $SCALE$
USER NAME = project

CONTRACT NO. 66607

EarthTech
A Tyco International Ltd. Company

F.A.P. RTE.	SECTION	COUNTY	TOTAL SHEETS	SHEET NO.
786	(109) BR	LASALLE	351	170
STA. 67+00		TO STA. 72+50		
FED. ROAD DIST. NO.	ILLINOIS	FED. AID PROJECT		

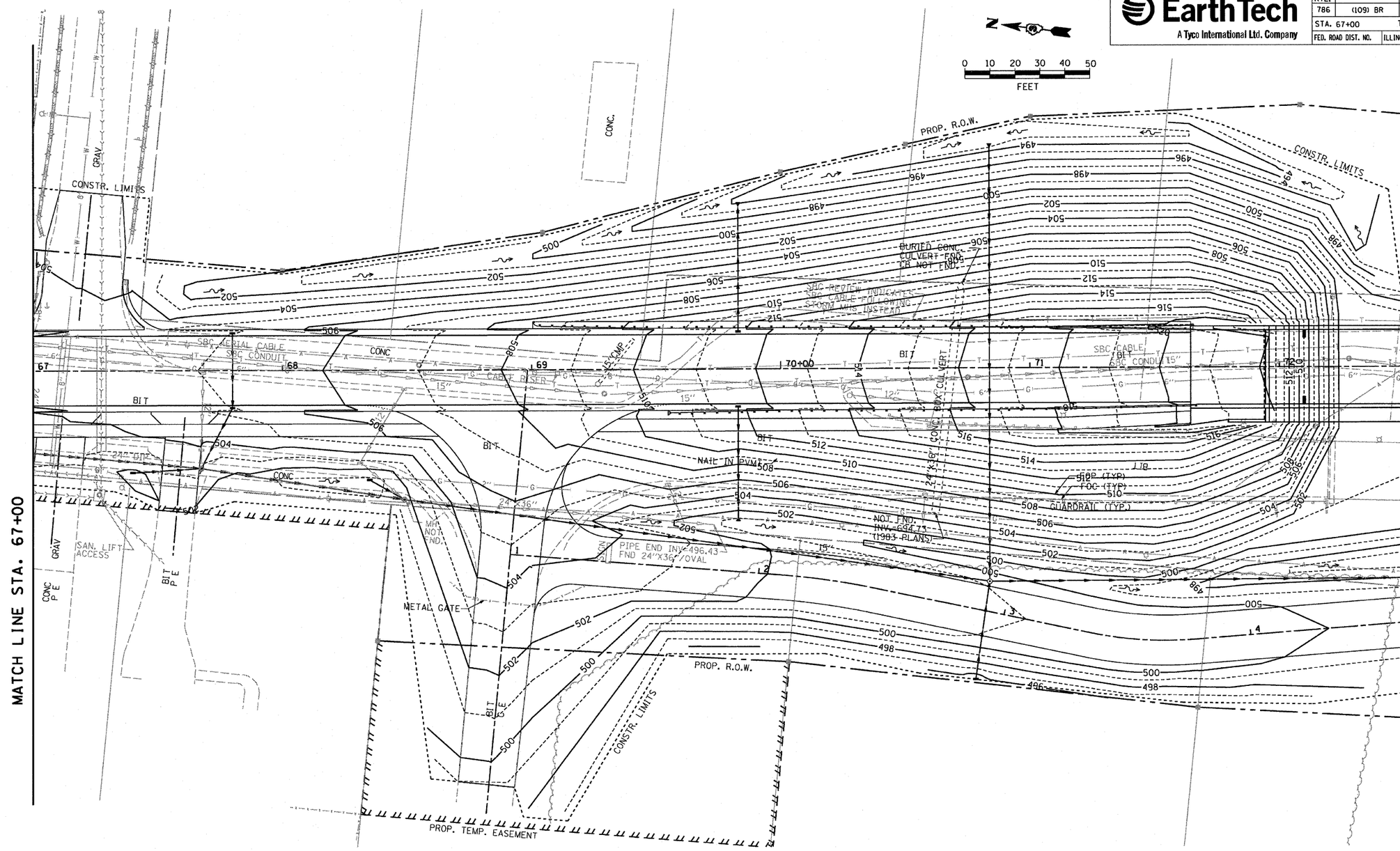

REVISIONS	
NAME	DATE

ILLINOIS DEPARTMENT OF TRANSPORTATION

GRADING PLAN
STA. 67+00 TO STA. 72+50

SCALE: 1" = 20'
DATE: OCTOBER, 2007

DRAWN BY CJO
CHECKED BY JCL

PLOT DATE = 10/4/2007
FILE NAME = $FILEL$
PLOT SCALE = $SCALE$
USER NAME = $project

CONTRACT NO. 66607

EarthTech
A Tyco International Ltd. Company

F.A.P. RTE.	SECTION	COUNTY	TOTAL SHEETS	SHEET NO.
786	(109) BR	LASALLE	351	171
STA. 72+50		TO STA. 78+00		
FED. ROAD DIST. NO.	ILLINOIS	FED. AID PROJECT		

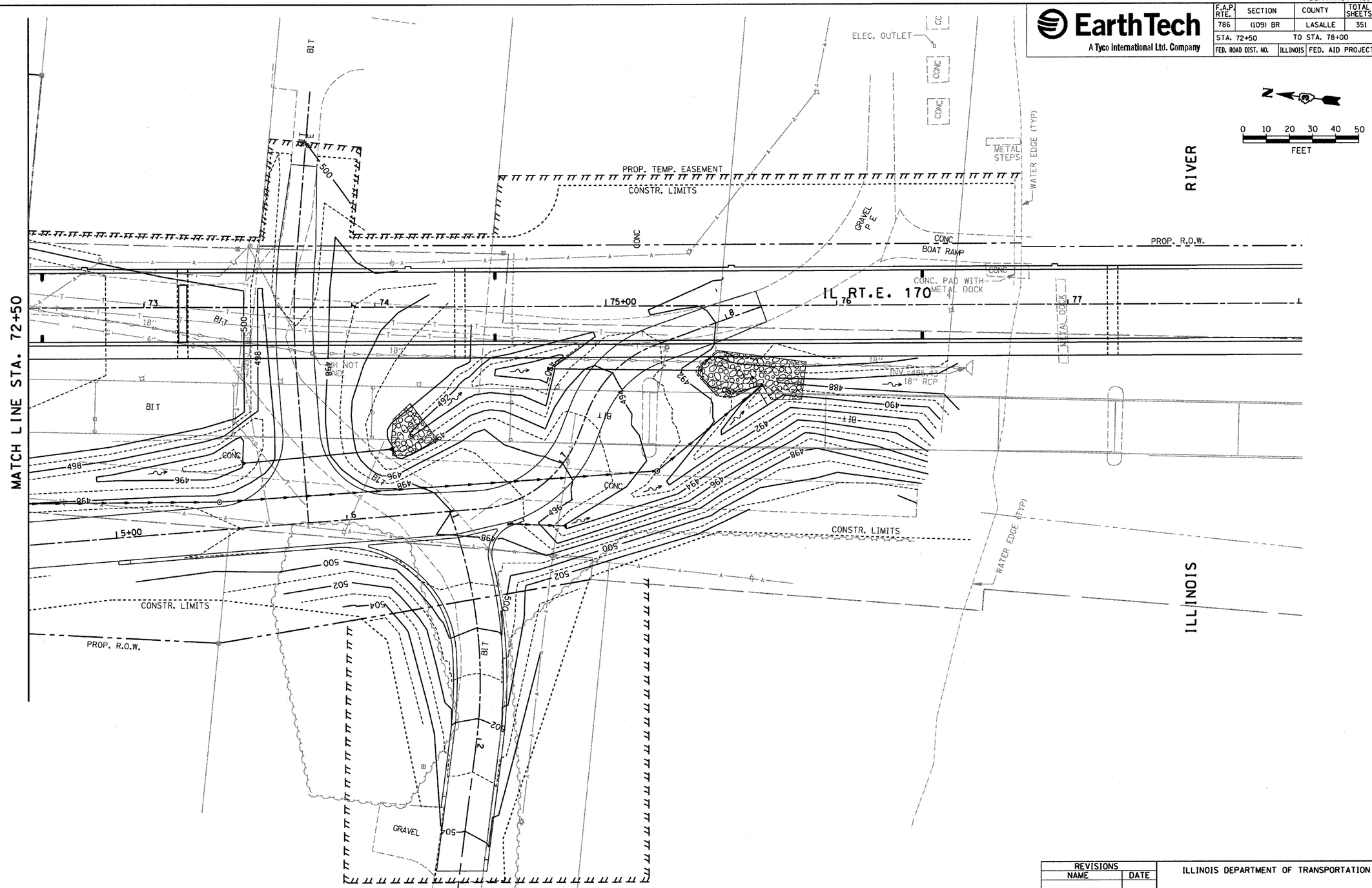

REVISIONS NAME	DATE

ILLINOIS DEPARTMENT OF TRANSPORTATION

GRADING PLAN
STA. 72+50 TO STA. 78+00

SCALE: 1" = 20'
DATE: OCTOBER, 2007

DRAWN BY CJO
CHECKED BY JCL

PLOT DATE = 10/4/2007
FILE NAME = $FILEL$
PLOT SCALE = $PSCALE$
PLOT UNITS = $PUNITS$
USER NAME = project

CONTRACT NO. 66607

EarthTech
A Tyco International Ltd. Company

F.A.P. RTE.	SECTION	COUNTY	TOTAL SHEETS	SHEET NO.
786	(109) BR	LASALLE	351	172
STA. 83+50		TO STA. 89+00		
FED. ROAD DIST. NO.	ILLINOIS	FED. AID PROJECT		

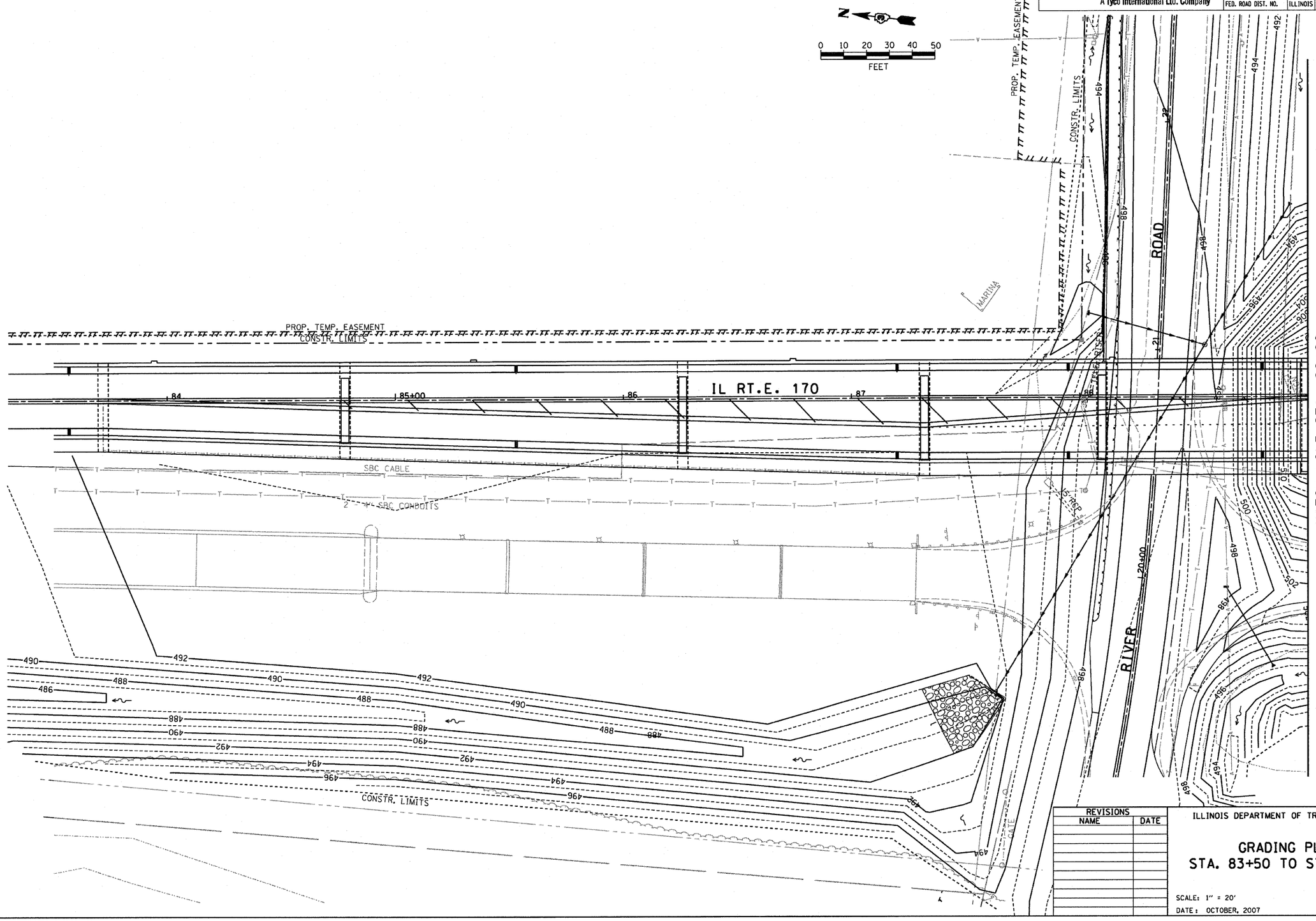

REVISIONS

NAME	DATE

ILLINOIS DEPARTMENT OF TRANSPORTATION

GRADING PLAN
STA. 83+50 TO STA. 89+00

SCALE: 1" = 20'

DATE: OCTOBER, 2007

DRAWN BY CJO

CHECKED BY JCL

PLOT DATE = 10/1/2007
FILE NAME = $FILEL$
PLOT SCALE = $SCALE$
PLOT SCALE = $SCALE$
USER NAME = project

CONTRACT NO. 66607

EarthTech
A Tyco International Ltd. Company

F.A.P. RTE.	SECTION	COUNTY	TOTAL SHEETS	SHEET NO.
786	(109) BR	LASALLE	351	173
STA. 89+00		TO STA. 94+50		
FED. ROAD DIST. NO.	ILLINOIS	FED. AID PROJECT		

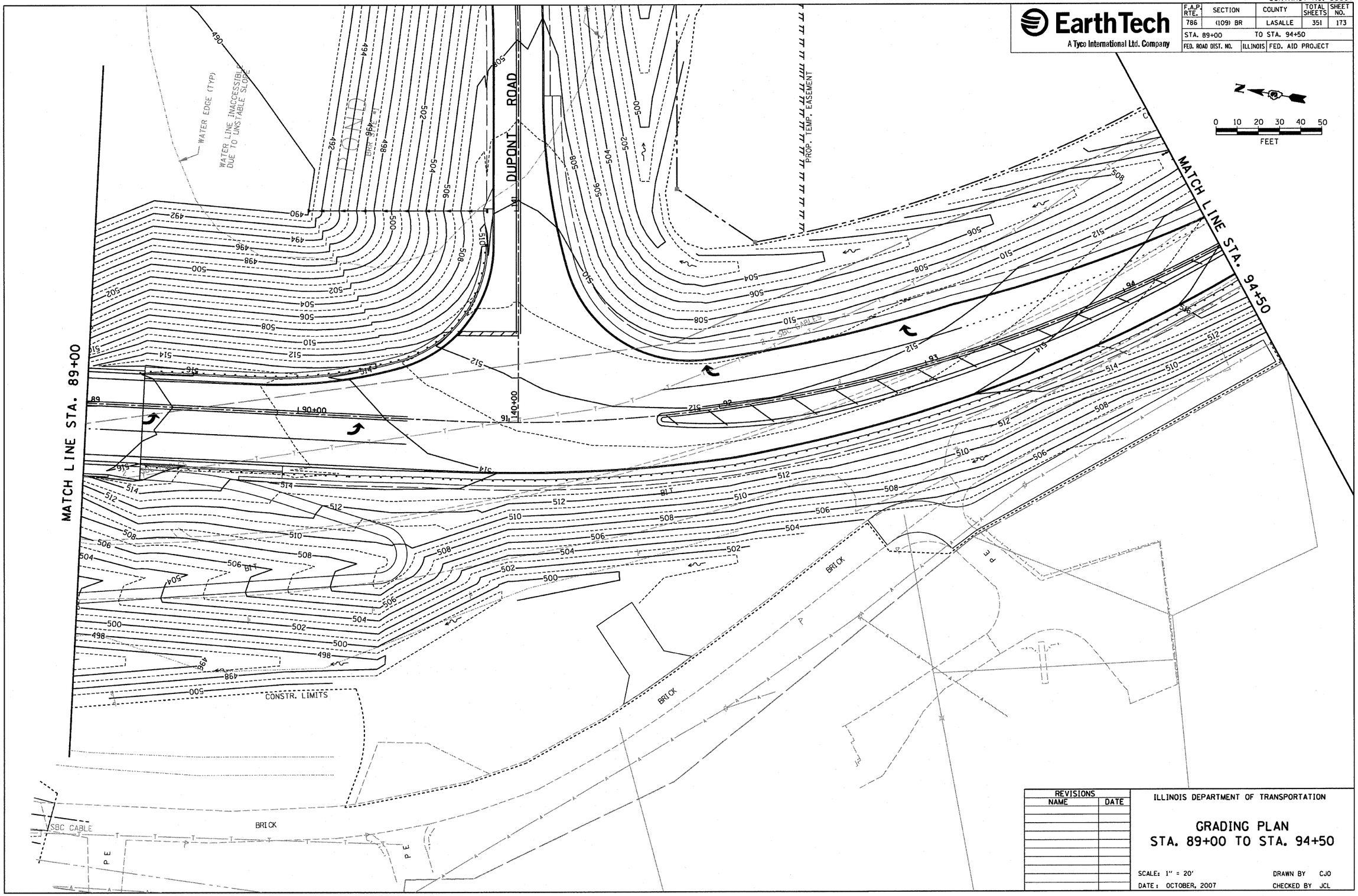

REVISIONS	
NAME	DATE

ILLINOIS DEPARTMENT OF TRANSPORTATION

GRADING PLAN
STA. 89+00 TO STA. 94+50

SCALE: 1" = 20'
DATE: OCTOBER, 2007

DRAWN BY CJO
CHECKED BY JCL

PLOT DATE = 10/4/2007
FILE NAME = $FILE$
PLOT SCALE = $SCALE$
USER NAME = $USER$

CONTRACT NO. 66607

EarthTech
A Tyco International Ltd. Company

F.A.P. RTE.	SECTION	COUNTY	TOTAL SHEETS	SHEET NO.
786	(109) BR	LASALLE	351	174
STA. 94+50		TO STA. 100+13.44		
FED. ROAD DIST. NO.	ILLINOIS	FED. AID PROJECT		

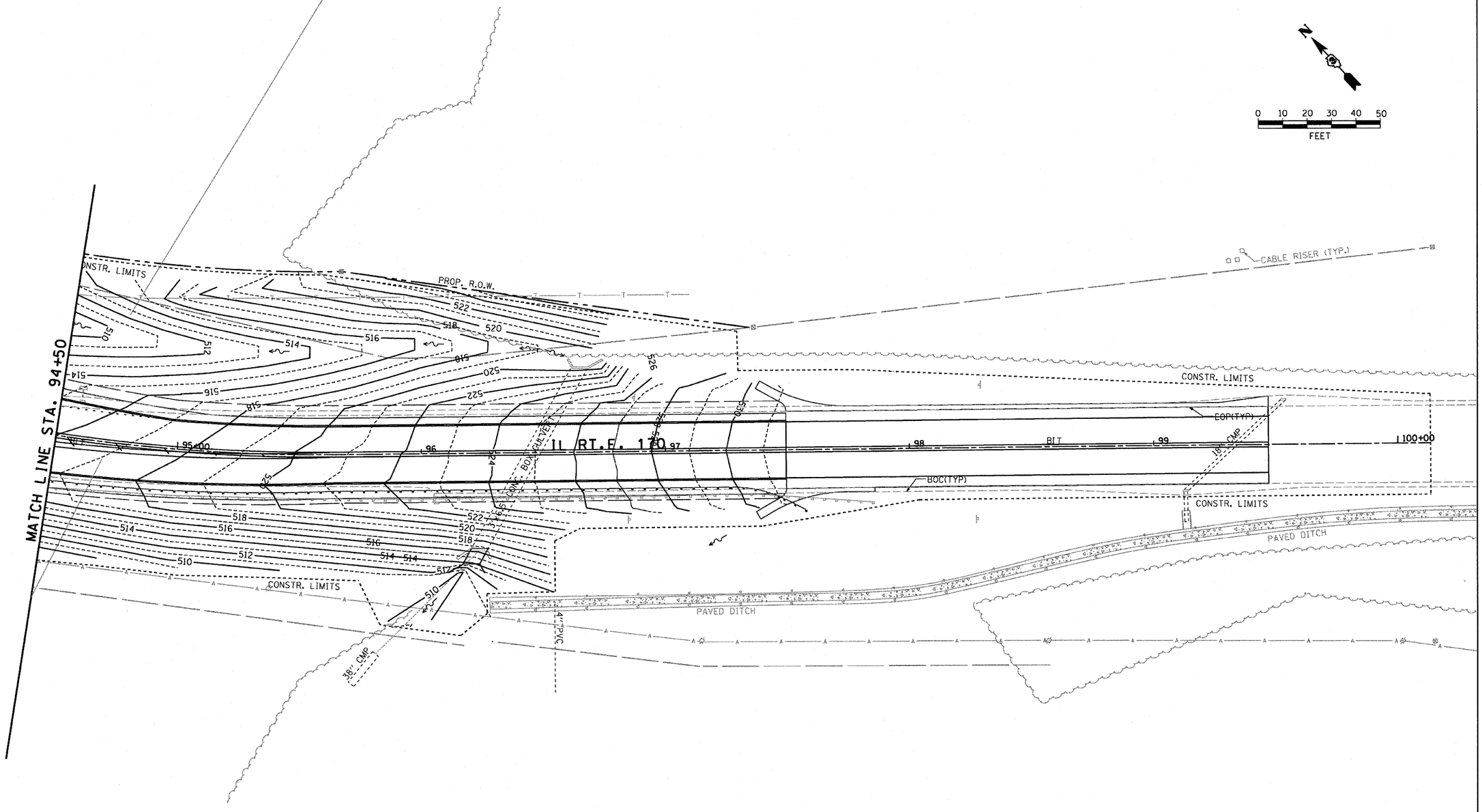

NOTE: FOR PROFILE SEE SHEET .

REVISIONS	
NAME	DATE

ILLINOIS DEPARTMENT OF TRANSPORTATION

GRADING PLAN
STA. 94+50 TO STA. 100+13.44

SCALE: 1" = 20'
DATE: OCTOBER, 2007

DRAWN BY CJO
CHECKED BY JCL

PLOT DATE = 10/4/2007
FILE NAME = $FILE$
PLOT SCALE = $SCALE$
USER NAME = project

CONTRACT NO. 66607

EarthTech
A Tyco International Ltd. Company

F.A.P. RTE.	SECTION	COUNTY	TOTAL SHEETS	SHEET NO.
786	(109) BR	LASALLE	351	175
STA. 140+00		TO STA. 145+00		
FED. ROAD DIST. NO.	ILLINOIS	FED. AID PROJECT		

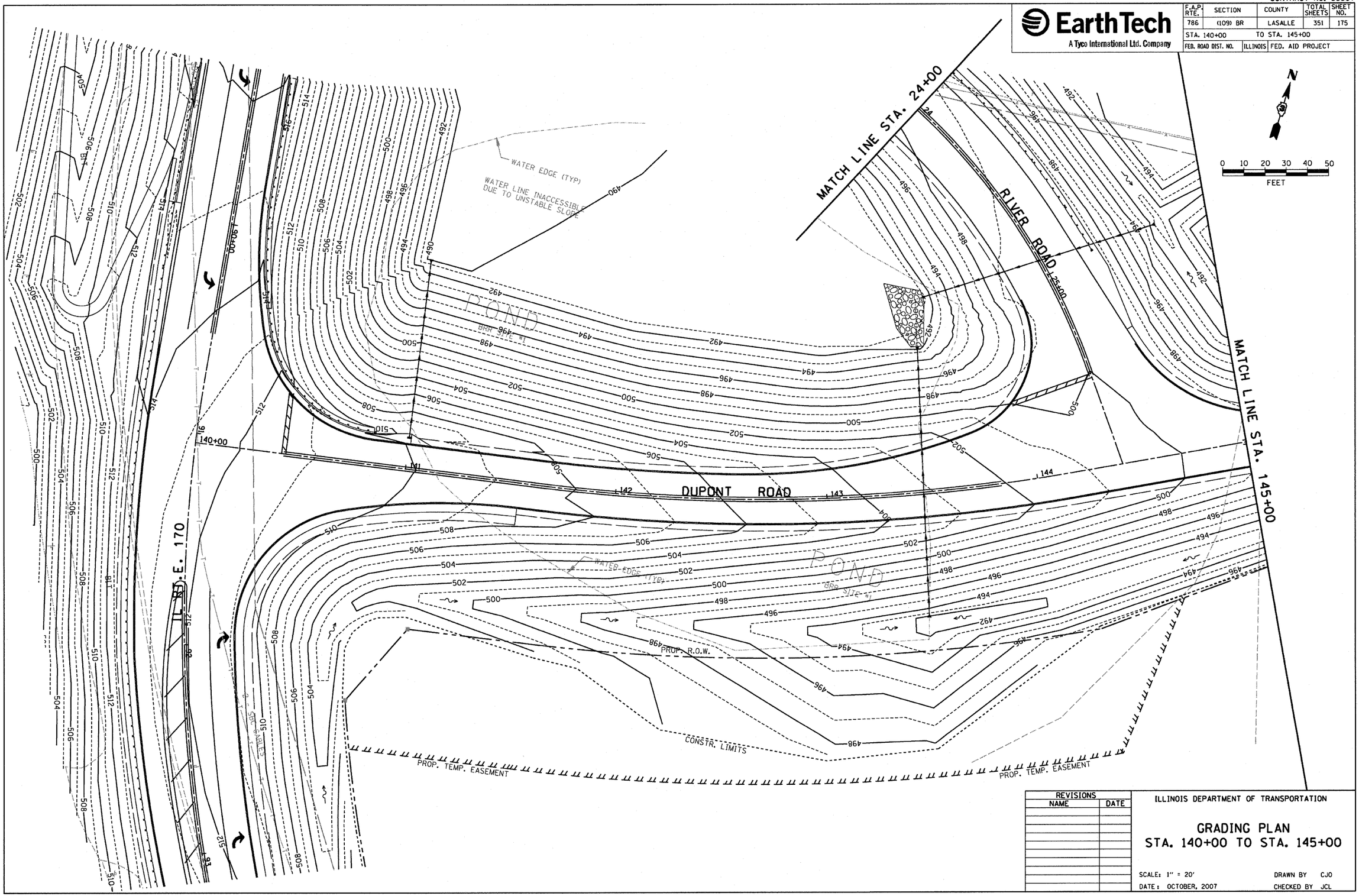

REVISIONS	
NAME	DATE

ILLINOIS DEPARTMENT OF TRANSPORTATION

GRADING PLAN
STA. 140+00 TO STA. 145+00

SCALE: 1" = 20'
DATE: OCTOBER, 2007
DRAWN BY CJO
CHECKED BY JCL

PLOT DATE = 10/4/2007
FILE NAME = $FILEL$
PLOT SCALE = $SCALE$
USER NAME = project

CONTRACT NO. 66607

EarthTech
A Tyco International Ltd. Company

F.A.P. RTE.	SECTION	COUNTY	TOTAL SHEETS	SHEET NO.
786	(109) BR	LASALLE	351	176
STA. 145+00		TO STA. 150+50		
FED. ROAD DIST. NO.	ILLINOIS	FED. AID PROJECT		

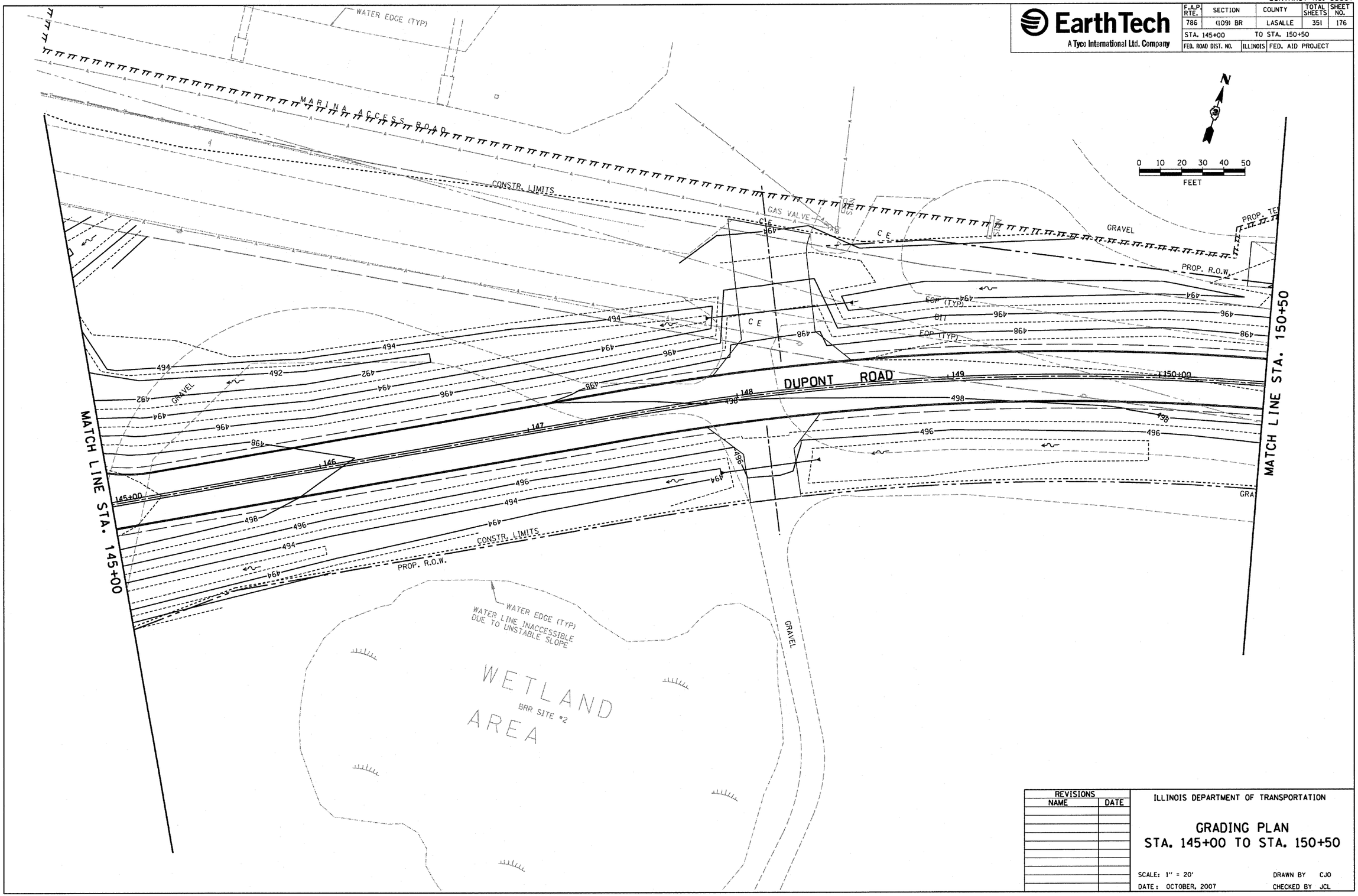

REVISIONS	
NAME	DATE

ILLINOIS DEPARTMENT OF TRANSPORTATION

GRADING PLAN
STA. 145+00 TO STA. 150+50

SCALE: 1" = 20'
DATE: OCTOBER, 2007

DRAWN BY CJO
CHECKED BY JCL

PLOT DATE = 10/4/2007
FILE NAME = $FILEL$
PLOT SCALE = $SCALE$
USER NAME = proj$pc1

CONTRACT NO. 66607

EarthTech
A Tyco International Ltd. Company

F.A.P. RTE.	SECTION	COUNTY	TOTAL SHEETS	SHEET NO.
786	(109) BR	LASALLE	351	177
STA. 150+50		TO STA. 156+00		
FED. ROAD DIST. NO.	ILLINOIS	FED. AID PROJECT		

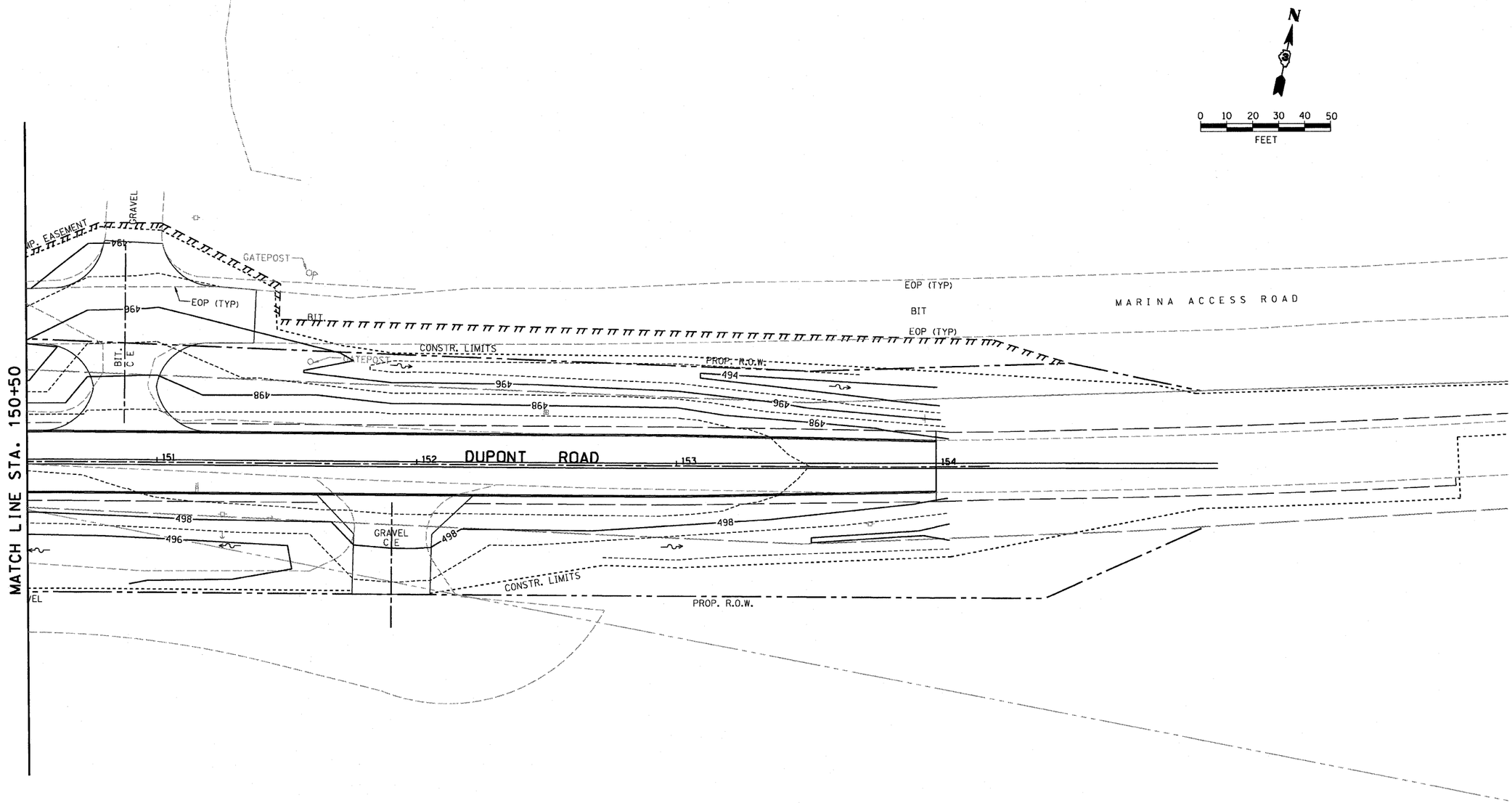

REVISIONS	
NAME	DATE

ILLINOIS DEPARTMENT OF TRANSPORTATION

GRADING PLAN
STA. 150+50 TO STA. 156+00

SCALE: 1" = 20'
DATE : OCTOBER, 2007

DRAWN BY CJO
CHECKED BY JCL

PLOT DATE = 10/4/2007
FILE NAME = $FILEL$
PLOT SCALE = $SCALE$
USER NAME = project

CONTRACT NO. 66607

EarthTech
A Tyco International Ltd. Company

F.A.P. RTE.	SECTION	COUNTY	TOTAL SHEETS	SHEET NO.
786	(109) BR	LASALLE	351	178
STA. 61+50		TO STA. 67+00		
FED. ROAD DIST. NO.	ILLINOIS	FED. AID PROJECT		

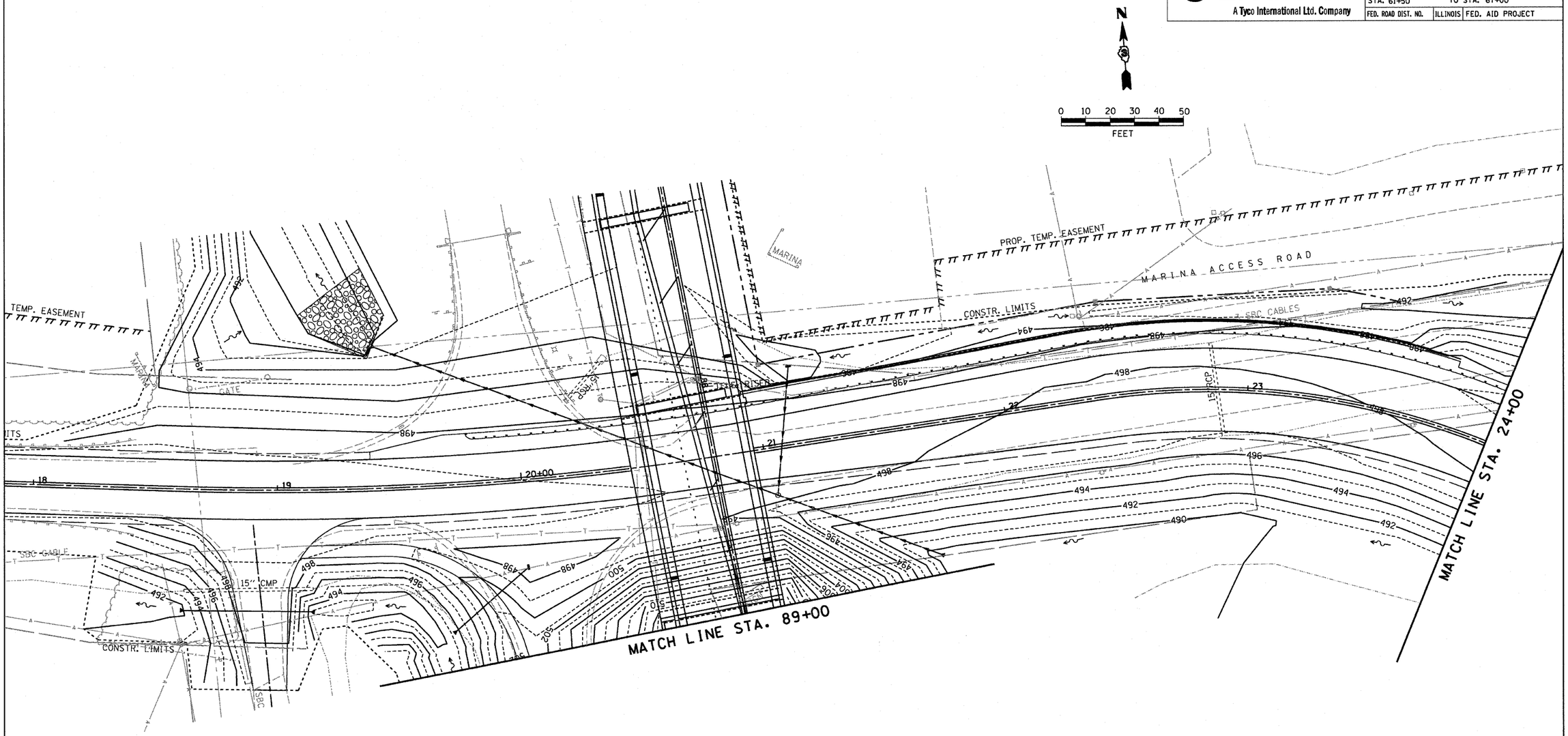

REVISIONS	
NAME	DATE

ILLINOIS DEPARTMENT OF TRANSPORTATION

GRADING PLAN
STA. 18+00 TO STA. 24+00

SCALE: 1" = 20'
DATE: OCTOBER, 2007

DRAWN BY CJO
CHECKED BY JCL

PLOT DATE = 10/4/2007
FILE NAME = $FILEL$
PLOT SCALE = $SCALE$
USER NAME = project

CONTRACT NO. 66607

EarthTech
A Tyco International Ltd. Company

F.A.P. RTE.	SECTION	COUNTY	TOTAL SHEETS	SHEET NO.
786	(109) BR	LASALLE	351	179
STA. 61+50		TO STA. 100+00		
FED. ROAD DIST. NO.	ILLINOIS	FED. AID PROJECT		

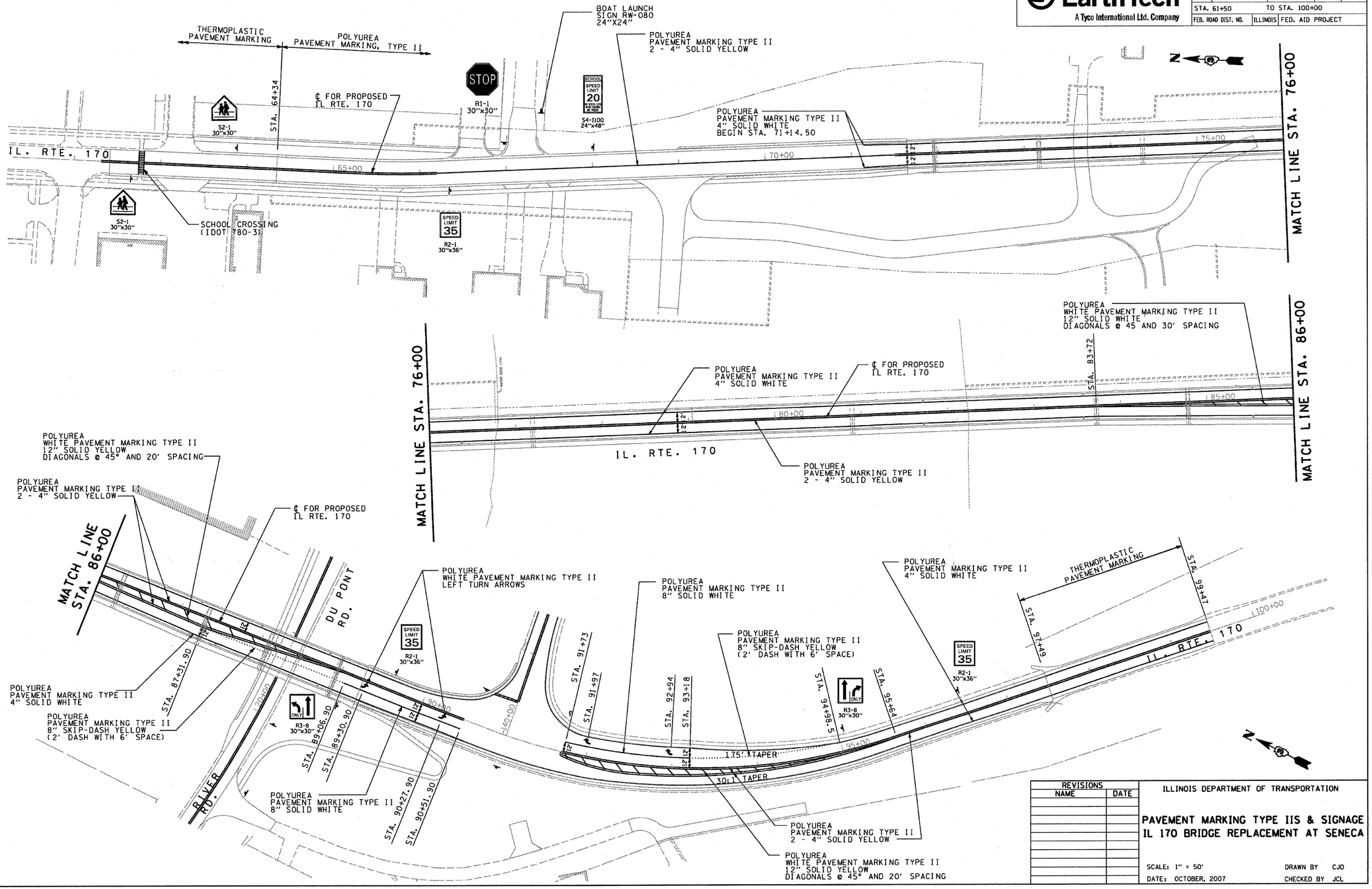

REVISIONS	
NAME	DATE

ILLINOIS DEPARTMENT OF TRANSPORTATION

PAVEMENT MARKING TYPE IIS & SIGNAGE
IL 170 BRIDGE REPLACEMENT AT SENECA

SCALE: 1" = 50'
DATE: OCTOBER, 2007
DRAWN BY CJO
CHECKED BY JCL

PLOT DATE = 10/4/2007
FILE NAME = $FILEL$
PLOT SCALE = $SCALE$
USER NAME = project

CONTRACT NO. 66607

EarthTech
A Tyco International Ltd. Company

F.A.P. RTE.	SECTION	COUNTY	TOTAL SHEETS	SHEET NO.
786	(109) BR	LASALLE	351	180
STA. 61+50		TO STA. 100+00		
FED. ROAD DIST. NO.	ILLINOIS	FED. AID PROJECT		

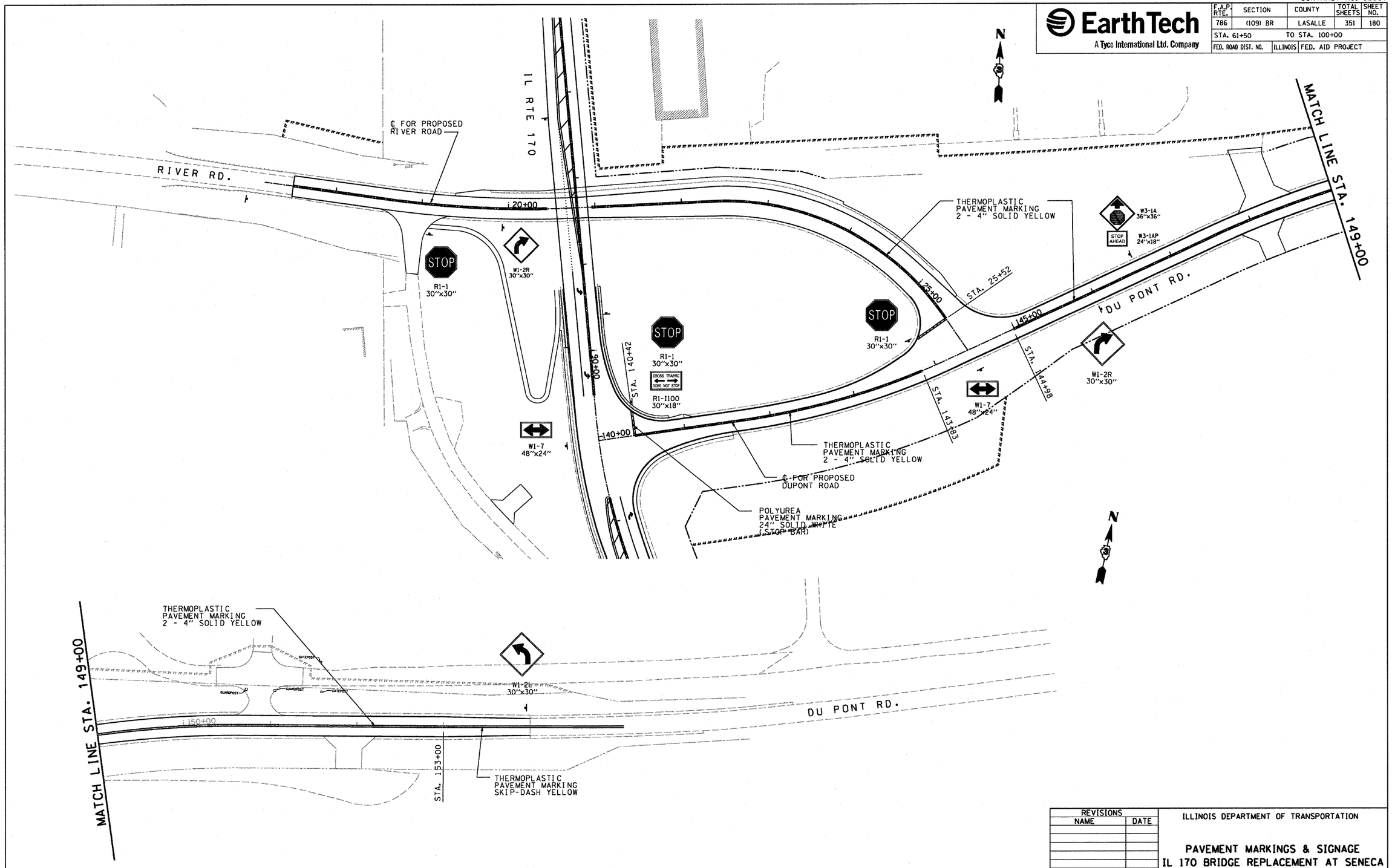

REVISIONS	
NAME	DATE

ILLINOIS DEPARTMENT OF TRANSPORTATION

PAVEMENT MARKINGS & SIGNAGE
IL 170 BRIDGE REPLACEMENT AT SENECA

SCALE: 1" = 50'
DATE: OCTOBER, 2007

DRAWN BY CJO
CHECKED BY JCL

PLOT DATE = 10/4/2007
FILE NAME = $FILEL$
PLOT SCALE = $SCALE$
USER NAME = project

CONTRACT NO. 66607

F.A.P. RTE.	SECTION	COUNTY	TOTAL SHEETS	SHEET NO.
786	(109) BR	LASALLE	351	181
STA. 61+50		TO STA. 100+00		
FED. ROAD DIST. NO.	ILLINOIS	FED. AID PROJECT		

EarthTech
A Tyco International Ltd. Company

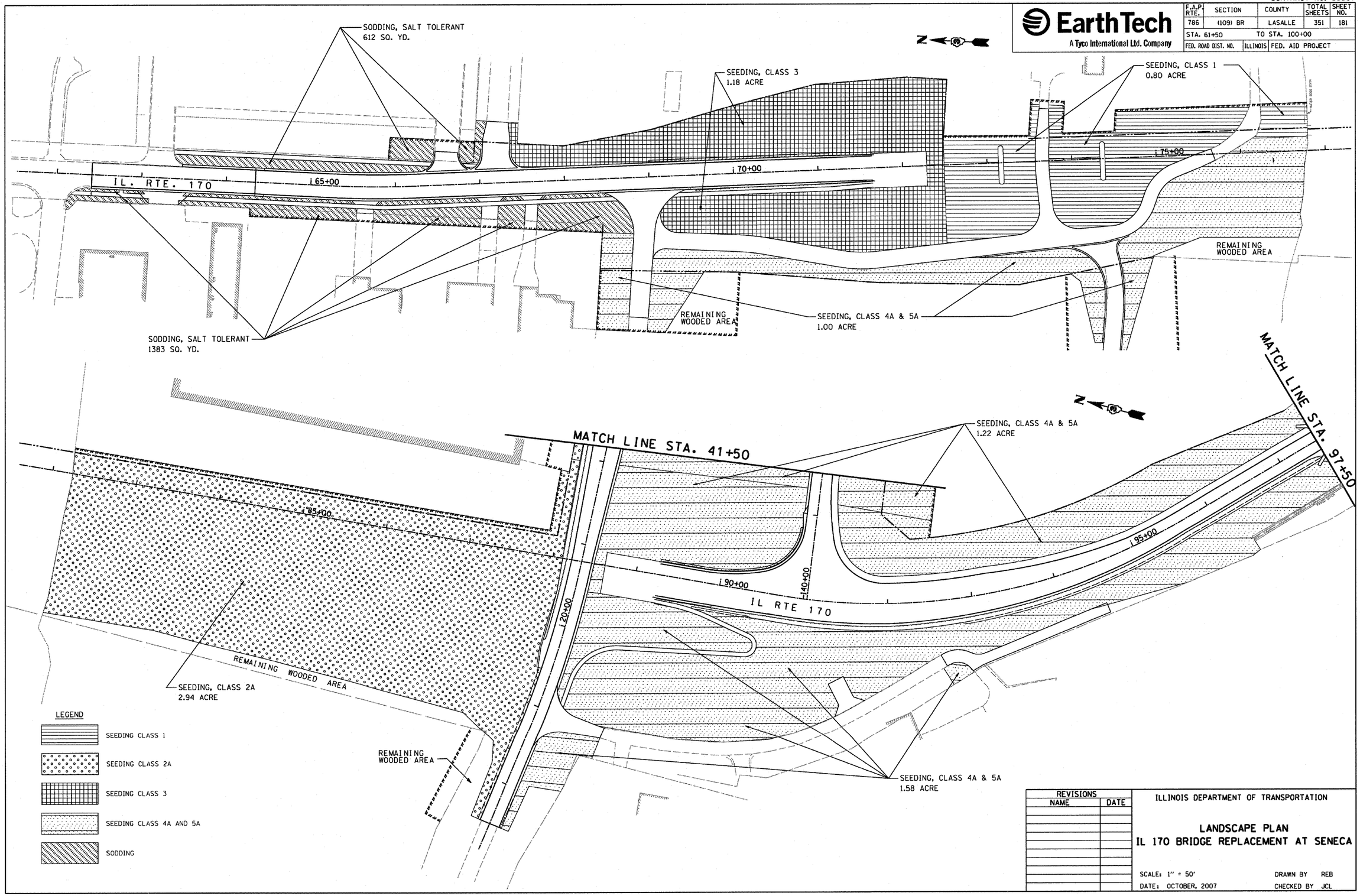

REVISIONS	
NAME	DATE

ILLINOIS DEPARTMENT OF TRANSPORTATION

LANDSCAPE PLAN
IL 170 BRIDGE REPLACEMENT AT SENECA

SCALE: 1" = 50'
DATE: OCTOBER, 2007

DRAWN BY REB
CHECKED BY JCL

PLOT DATE = 10/4/2007
FILE NAME = $FILEL$
PLOT SCALE = $SCALE$
USER NAME = project

CONTRACT NO. 66607

F.A.P. RTE.	SECTION	COUNTY	TOTAL SHEETS	SHEET NO.
786	(109) BR	LASALLE	351	182
STA. 61+50		TO STA. 100+00		
FED. ROAD DIST. NO.	ILLINOIS	FED. AID PROJECT		

EarthTech
A Tyco International Ltd. Company

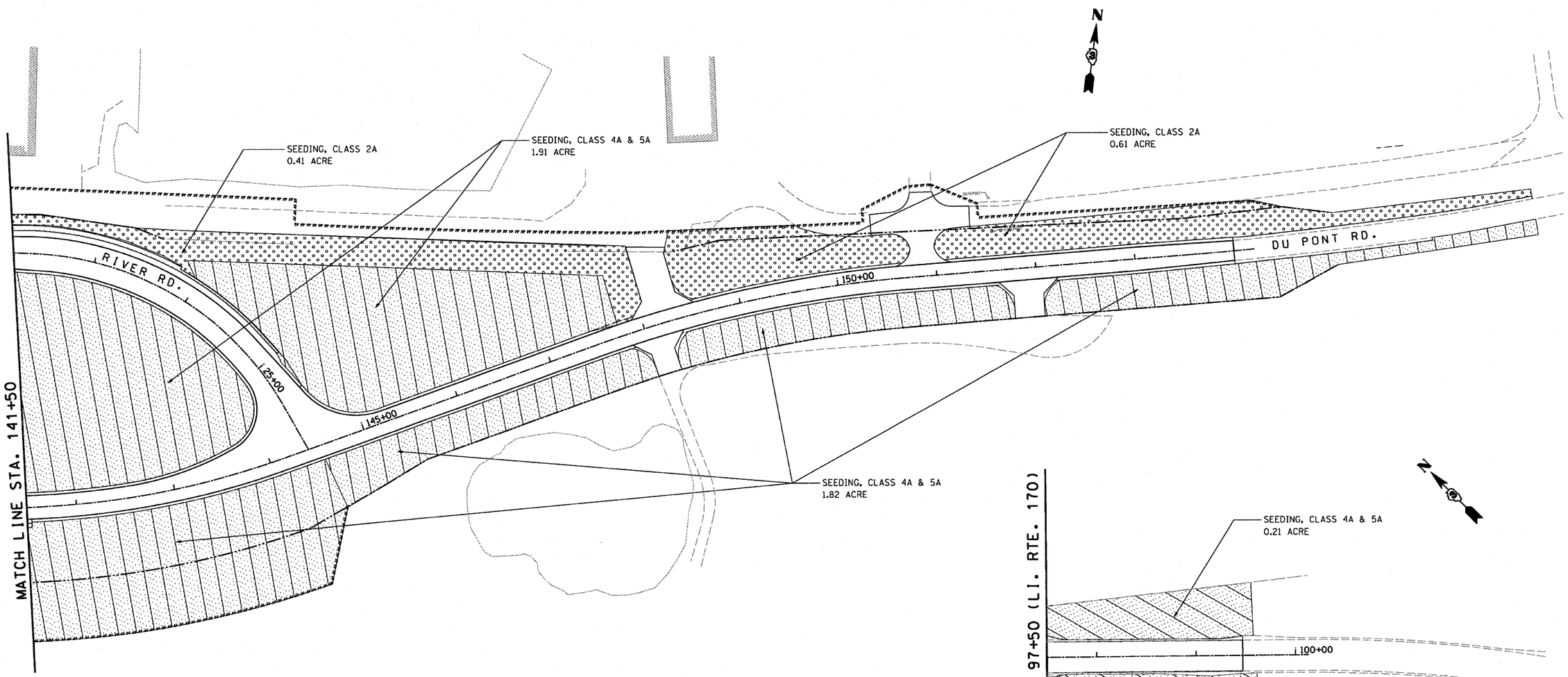

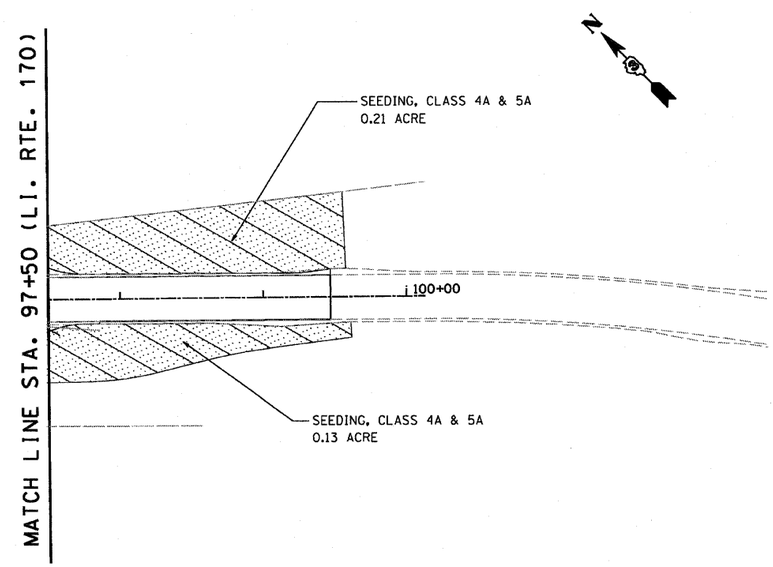

CODE	ITEM DESCRIPTION	UNIT	TOTAL QUANTITY
25000100	SEEDING, CLASS 1	ACRE	0.80
25000210	SEEDING, CLASS 2A	ACRE	3.96
25000300	SEEDING CLASS 3	ACRE	1.18
25000312	SEEDING CLASS 4A	ACRE	7.87
25000322	SEEDING CLASS 5A	ACRE	7.87
25000400	NITROGEN FERTILIZER NUTRIENT	POUND	1976
25000500	PHOSPHORUS FERTILIZER NUTRIENT	POUND	1976
25000600	POTASSIUM FERTILIZER NUTRIENT	POUND	1976
25200110	SODDING, SALT TOLERANT	SQ YD	1995

NOTE: ALL SEEDING AREAS TO BE COVERED WITH MULCH, METHOD 2.
(SEE EROSION CONTROL PLANS).

LEGEND

- SEEDING CLASS 1
- SEEDING CLASS 2A
- SEEDING CLASS 3
- SEEDING CLASS 4A AND 5A
- SODDING, SALT TOLERANT

REVISIONS	
NAME	DATE

ILLINOIS DEPARTMENT OF TRANSPORTATION

LANDSCAPE PLAN
IL 170 BRIDGE REPLACEMENT AT SENECA

SCALE: 1" = 50'
DATE: OCTOBER, 2007
DRAWN BY REB
CHECKED BY JCL

PLOT DATE = 10/4/2007
FILE NAME = $FILEL$
PLOT SCALE = $SCALE$
USER NAME = project

CONTRACT NO. 66607

F.A.P. RTE.	SECTION	COUNTY	TOTAL SHEETS	SHEET NO.
786	(109) BR	LASALLE	351	183
STA. 61+50		TO STA. 100+00		
FED. ROAD DIST. NO.	ILLINOIS	FED. AID PROJECT		

EarthTech
A Tyco International Ltd. Company

NOTES:

1. STRUCTURE MOUNTED POLE AND LIGHTING UNITS TO REMAIN IN OPERATION DURING CONSTRUCTION OF NEW BRIDGE. REMOVAL OF EXISTING LIGHTING UNIT, NO SALVAGE WHEN BRIDGE IS REMOVED. DEMOLITION STRUCTURE LIGHTING UNITS INCLUDING CONDUIT AND WIRING SHALL BE REMOVED WITH BRIDGE STRUCTURE.
2. STRUCTURE MOUNTED NAVIGATION LIGHTING UNITS TO REMAIN IN OPERATION DURING CONSTRUCTION OF NEW BRIDGE, REMOVAL OF NAVIGATION OBSTRUCTION WARNING LIGHT SYSTEM SHALL BE PAID LUMP SUM WHEN BRIDGE IS REMOVED.
3. GRADE MOUNTED LIGHTING UNITS SHALL BE REMOVED. PAYMENT SHALL BE PER UNIT EACH, COMPLETE WITH FOUNDATION. (NO SALVAGE).
4. RELOCATE NAVIGATION AND LIGHTING CONTROLLERS. MOUNT CONTROLLERS TO BRIDGE GUARD RAIL. RECONNECT WIRING AT BASE OF EXISTING POLE UNILET T FITTING TO MAINTAIN FED TO LIGHTING, AND NAVIGATION LIGHTING UNITS
5. TEMPORARY ELECTRICAL SERVICE SHALL BE PROVIDED AND MAINTAINED TO RELOCATED BRIDGE LIGHTING CONTROLLERS SERVING NAVIGATION AND LIGHTING UNITS. SEE TEMPORARY ELECTRICAL SERVICE INSTALLATION DETAIL. REMOVAL OF TEMPORARY ELECTRIC SERVICE INSTALLATION REQUIRED AT TIME OF BRIDGE DEMOLITION.
6. EXISTING LIGHTING CONTROLLER SHALL BE REMOVED AND RELOCATED TO BRIDGE GUARD RAIL.
7. AERIAL CABLE, 3-1/C NO. 4 WITH MESSENGER WIRE.
8. REMOVE ELECTRICAL SERVICE INSTALLATION.

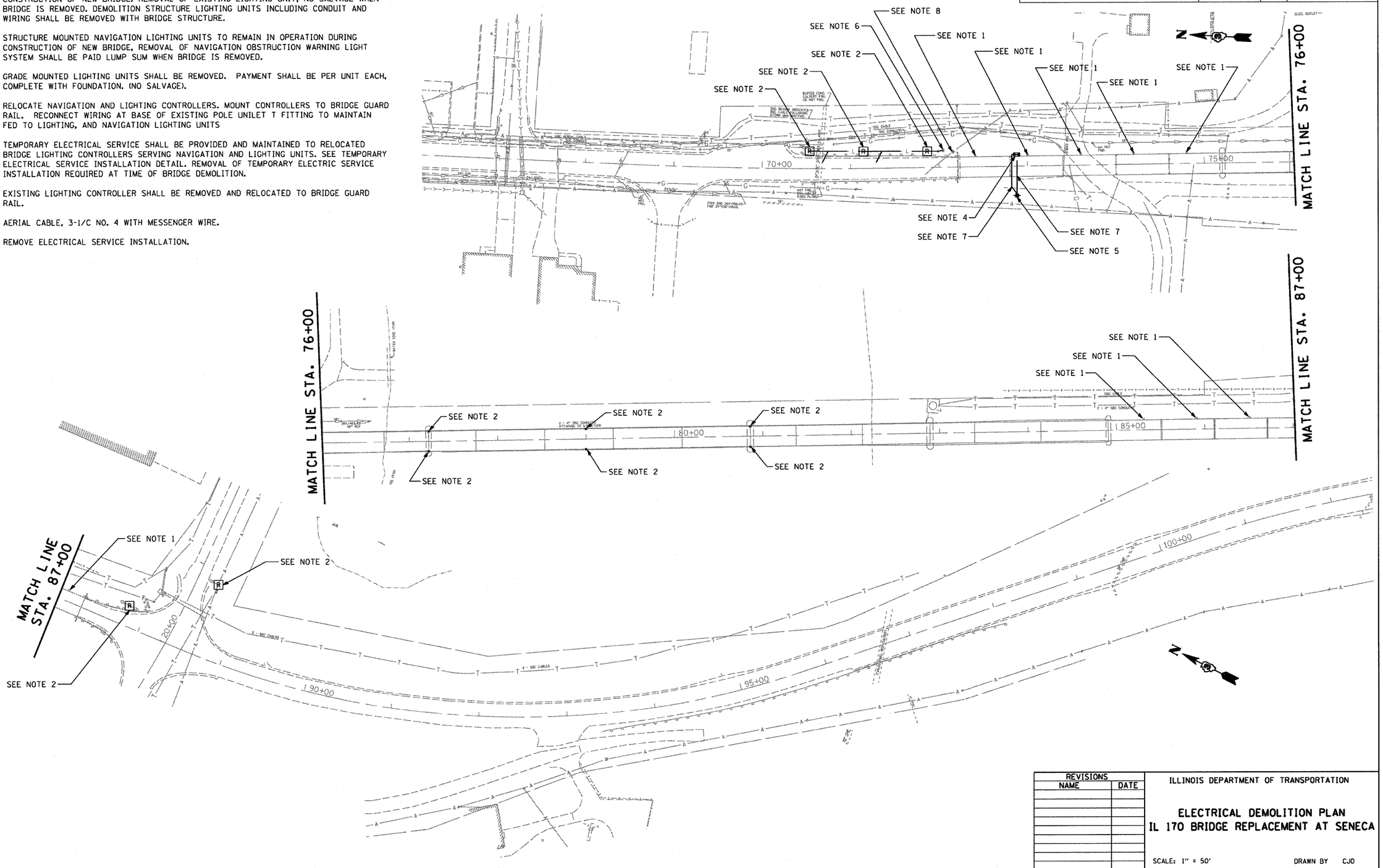

REVISIONS	
NAME	DATE

ILLINOIS DEPARTMENT OF TRANSPORTATION

ELECTRICAL DEMOLITION PLAN
IL 170 BRIDGE REPLACEMENT AT SENECA

SCALE: 1" = 50'
DATE: OCTOBER, 2007
DRAWN BY CJO
CHECKED BY JCL

PLOT DATE = 10/4/2007
FILE NAME = $FILEL$
PLOT SCALE = $SCALE$
USER NAME = project

CONTRACT NO. 66607

EarthTech
A Tyco International Ltd. Company

F.A.P. RTE.	SECTION	COUNTY	TOTAL SHEETS	SHEET NO.
786	(109) BR	LASALLE	351	184
STA. 61+50		TO STA. 100+00		
FED. ROAD DIST. NO.	ILLINOIS	FED. AID PROJECT		

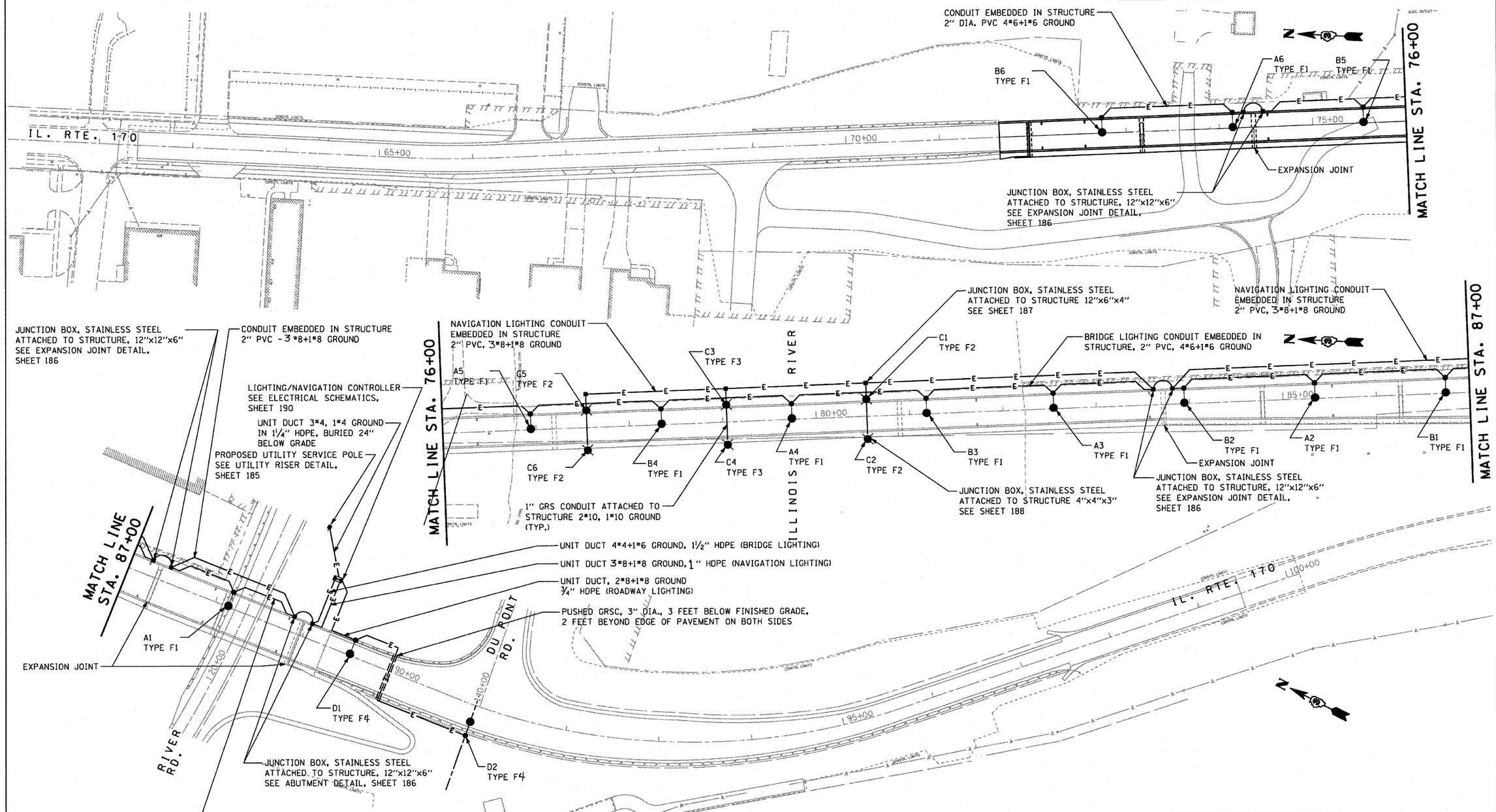

NOTES:

1. SEE BRIDGE DRAWINGS FOR STATION LOCATION OF BRIDGE LIGHT POLES
2. ROADWAY LIGHT POLE LOCATION:
   D1 - STA. 89+54.4; OFF. 22.4' LT
   D2 - STA. 90+99.4; OFF. 33.9' RT
3. SEE SHEET 185 FOR LEGEND

REVISIONS	
NAME	DATE

ILLINOIS DEPARTMENT OF TRANSPORTATION

PROPOSED ELECTRICAL PLAN
IL 170 BRIDGE REPLACEMENT AT SENECA

SCALE: 1" = 50'
DATE: OCTOBER, 2007
DRAWN BY CJO
CHECKED BY JCL

PLOT DATE = 10/4/2007
FILE NAME = $FILEL$
PLOT SCALE = $SCALE$
USER NAME = project

CONTRACT NO. 66607

EarthTech
A Tyco International Ltd. Company

F.A.P. RTE.	SECTION	COUNTY	TOTAL SHEETS	SHEET NO.
786	(109) BR	LASALLE	351	185
STA.		TO STA.		
FED. ROAD DIST. NO.	ILLINOIS FED. AID PROJECT			

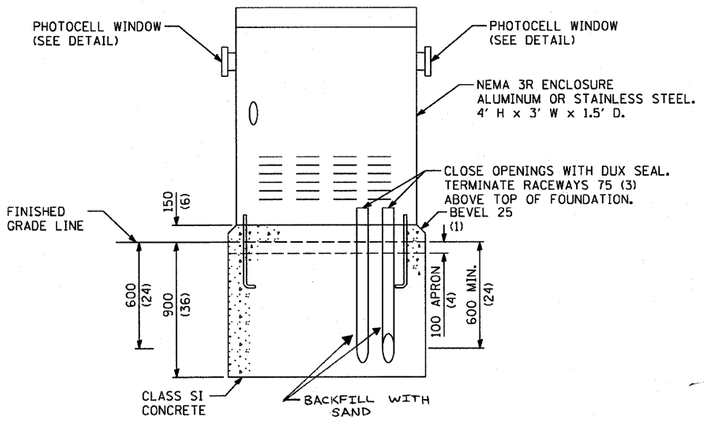

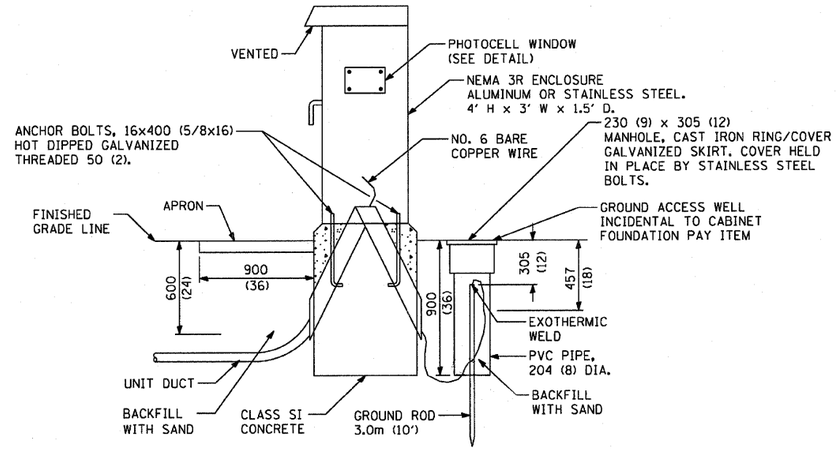

CONTROL CABINET AND FOUNDATION DETAIL
(TYPE D)

ELECTRICAL LEGEND

- PROPOSED LIGHT POLE
- PROPOSED NAVIGATION LIGHT
- EXISTING LIGHT POLE
- PROPOSED JUNCTION BOX
- EXISTING LIGHTING CONTROLLER
- PROPOSED LIGHTING CONTROLLER
- E — PROPOSED ELECTRIC CONDUCTOR CIRCUITING
- T — EXISTING TELEPHONE UTILITY
- A — EXISTING AERIAL CONDUCTORS
- EXISTING UTILITY POLE
- PROPOSED UTILITY POLE
- CONDUIT SLEEVE AS INDICATED

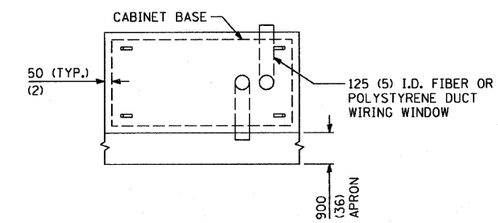

CONTROL CABINET FOUNDATION
TOP VIEW

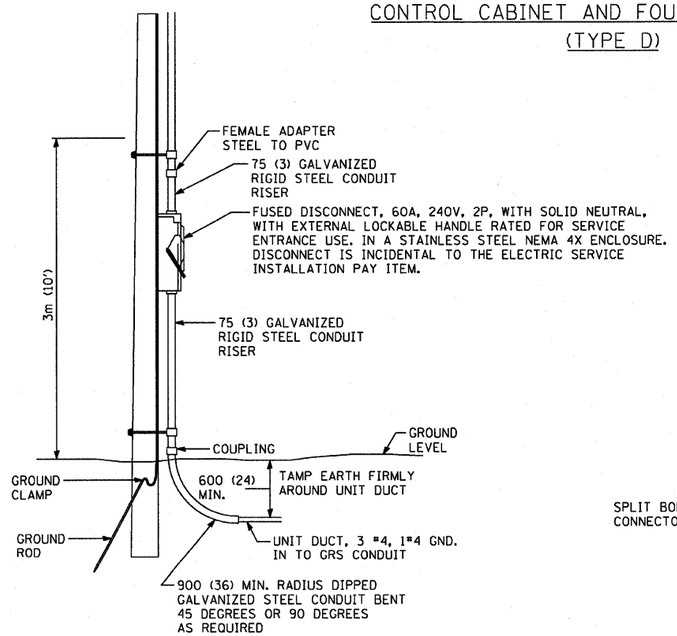

NOTE: ALL DIMENSIONS ON THIS DRAWING ARE IN MILLIMETERS (INCHES) UNLESS OTHERWISE INDICATED.

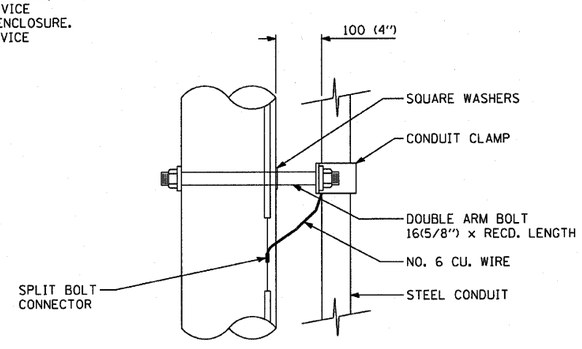

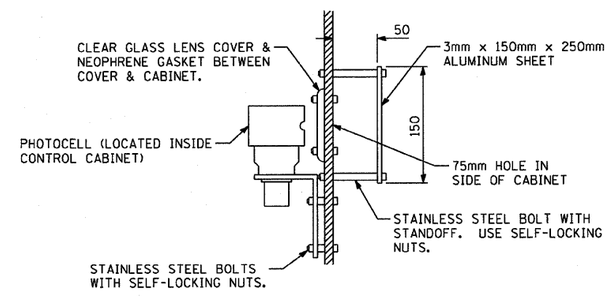

PHOTOCELL DETAIL

NOTES:

1. INSTALL CONDUIT FROM FUSED DISCONNECT TO APPROXIMATELY 3m (10') UP THE POLE AS SHOWN. ILLINOIS POWER COMPANY TO INSTALL ALL GROUNDING EQUIPMENT ON RISER POLE.
2. CONSULT WITH LOCAL ILLINOIS POWER OFFICE BEFORE CONSTRUCTION.
3. PHOTOCELLS MAY ALSO BE MOUNTED EXTERNAL ON RIGID PIPE RISERS OR ON THE CUSTOMER SERVICE POLE AS APPROVED BY THE ENGINEER TO PREVENT VANDALISM

UTILITY RISER DETAIL

REVISIONS	
NAME	DATE

ILLINOIS DEPARTMENT OF TRANSPORTATION

ELECTRICAL DETAILS
IL 170 BRIDGE REPLACEMENT AT SENECA

SCALE: 1" = 50' DRAWN BY CJO
DATE: OCTOBER, 2007 CHECKED BY JCL

PLOT DATE = 10/4/2007
FILE NAME = $FIGLEG
PLOT SCALE = $SCALE$
USER NAME = project

CONTRACT NO. 66607

EarthTech
A Tyco International Ltd. Company

F.A.P. RTE.	SECTION	COUNTY	TOTAL SHEETS	SHEET NO.
786	(109) BR	LASALLE	351	186
STA.		TO STA.		
FED. ROAD DIST. NO.	ILLINOIS	FED. AID PROJECT		

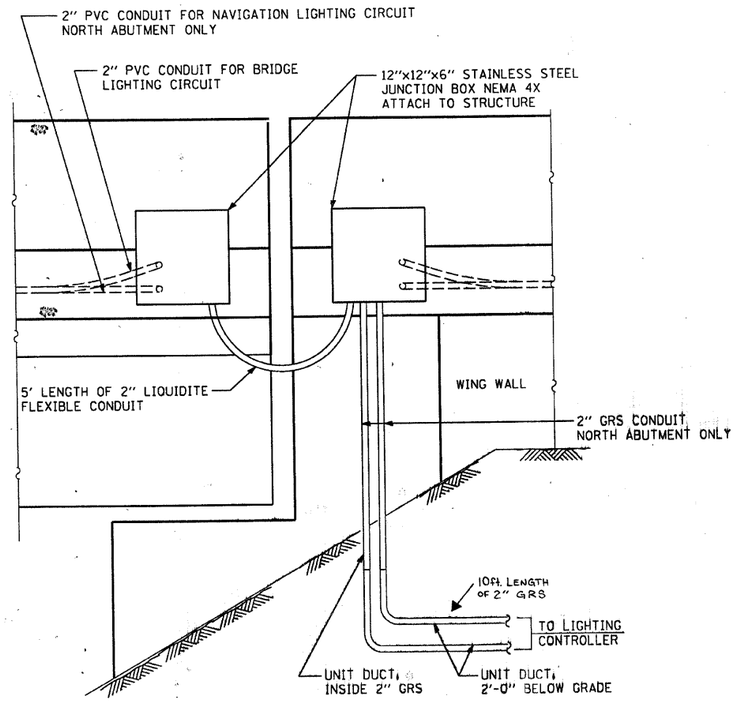

ABUTMENT DETAIL

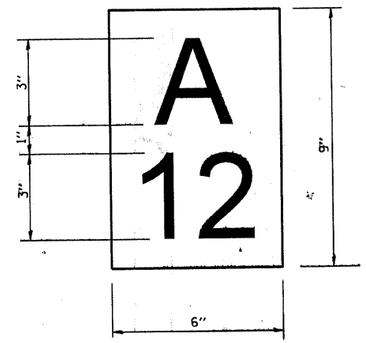

NOTES:

1. CONTRACTOR SHALL FURNISH AND INSTALL LIGHT POLE IDENTIFICATION ON EACH LIGHT POLE AS SHOWN ABOVE. IDENTIFICATION IS INCIDENTAL TO THE LIGHT POLE'S PAY ITEM. POLES SHALL BE IDENTIFIED AS LABELED ON ELECTRICAL PLAN SHEETS, AND AS APPROVED BY THE ENGINEER.
2. NUMERALS SHALL BE SERIES "D", BLACK, SCREENED ON SILVER-WHITE TYPE B PRESSURE SENSITIVE REFLECTIVE SHEETING.
3. IDENTIFICATION SHALL BE APPLIED APPROXIMATELY 6'-7" ABOVE THE ADJACENT PAVEMENT, AND AS NOTED IN THE STANDARD SPECIFICATIONS.

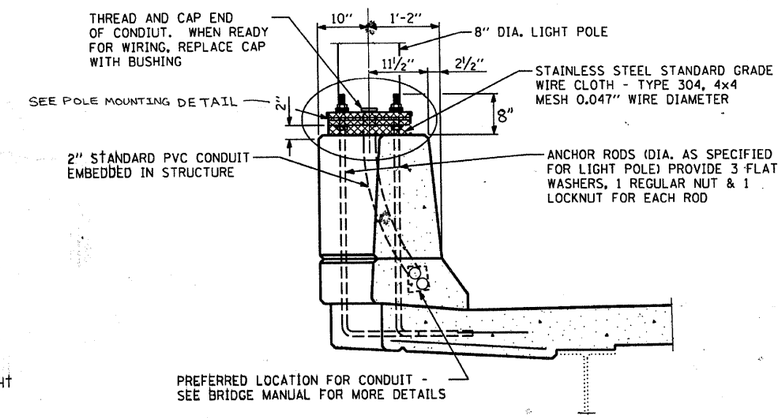

SECTION A-A

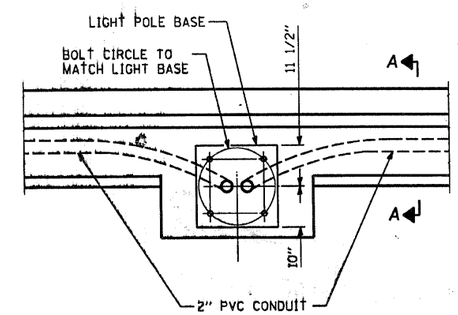

DETAILS OF
LIGHT POLE MOUNTED
ON CONCRETE PARAPET

N.T.S.

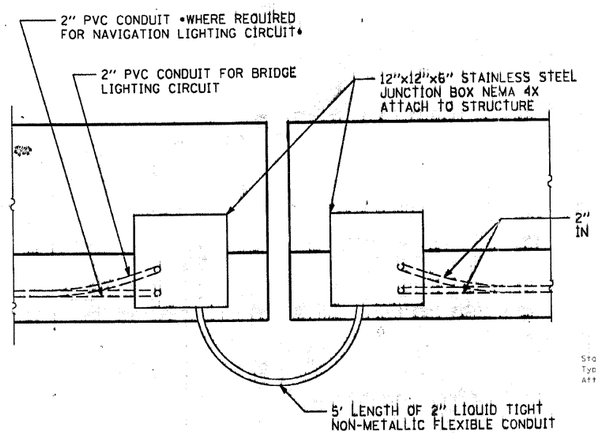

BRIDGE EXPANSION JOINT DETAIL

Pole Mounted on Bridge Parapet Detail

8/31/2006

Notes:

1) Locate poles over bridge piers where possible.
2) Thickness of isolation pad and washers shall be according to isolation pad manufactures's reccommendations based upon pole height and loading.

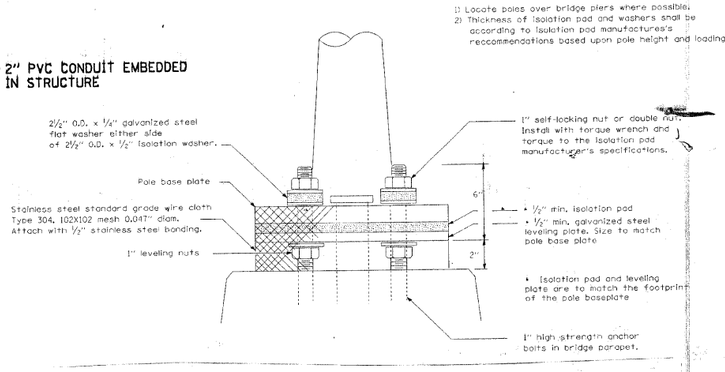

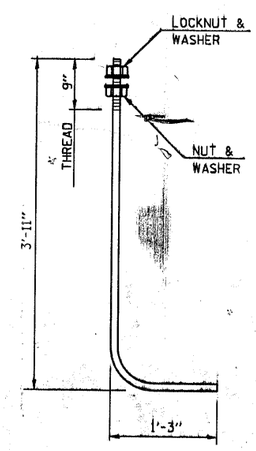

LIGHT POLE
ANCHOR BOLT DETAIL

REVISIONS	
NAME	DATE

ILLINOIS DEPARTMENT OF TRANSPORTATION

ELECTRICAL DETAILS
IL 170 BRIDGE REPLACEMENT AT SENECA

SCALE:
DATE: OCTOBER, 2007
DRAWN BY CJO
CHECKED BY JCL

PLOT DATE = 10/4/2007
FILE NAME = $FILE$
PLOT SCALE = $SCALE$
USER NAME = project

CONTRACT NO. 66607

F.A.P. RTE.	SECTION	COUNTY	TOTAL SHEETS	SHEET NO.
786	(109) BR	LASALLE	351	187
STA.		TO STA.		
FED. ROAD DIST. NO.	ILLINOIS	FED. AID PROJECT		

EarthTech
A Tyco International Ltd. Company

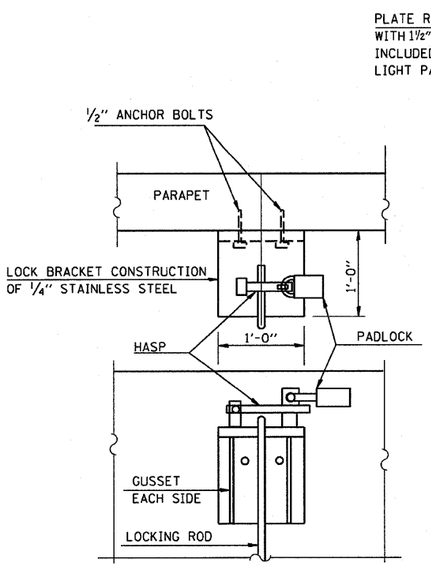

LOCK BRACKET DETAIL

(LOCK BRACKET AND LOCK ARE INCLUDED IN NAVIGATION LIGHT PAY ITEM)

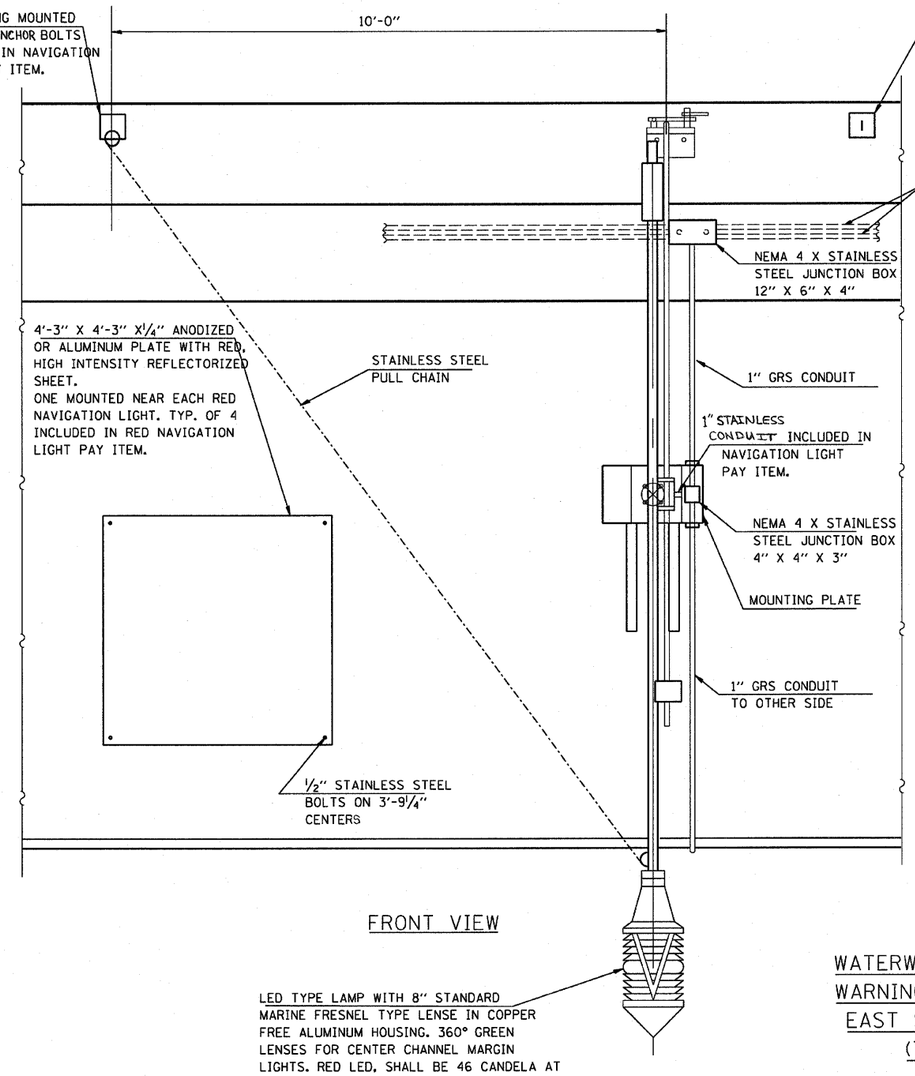

FRONT VIEW

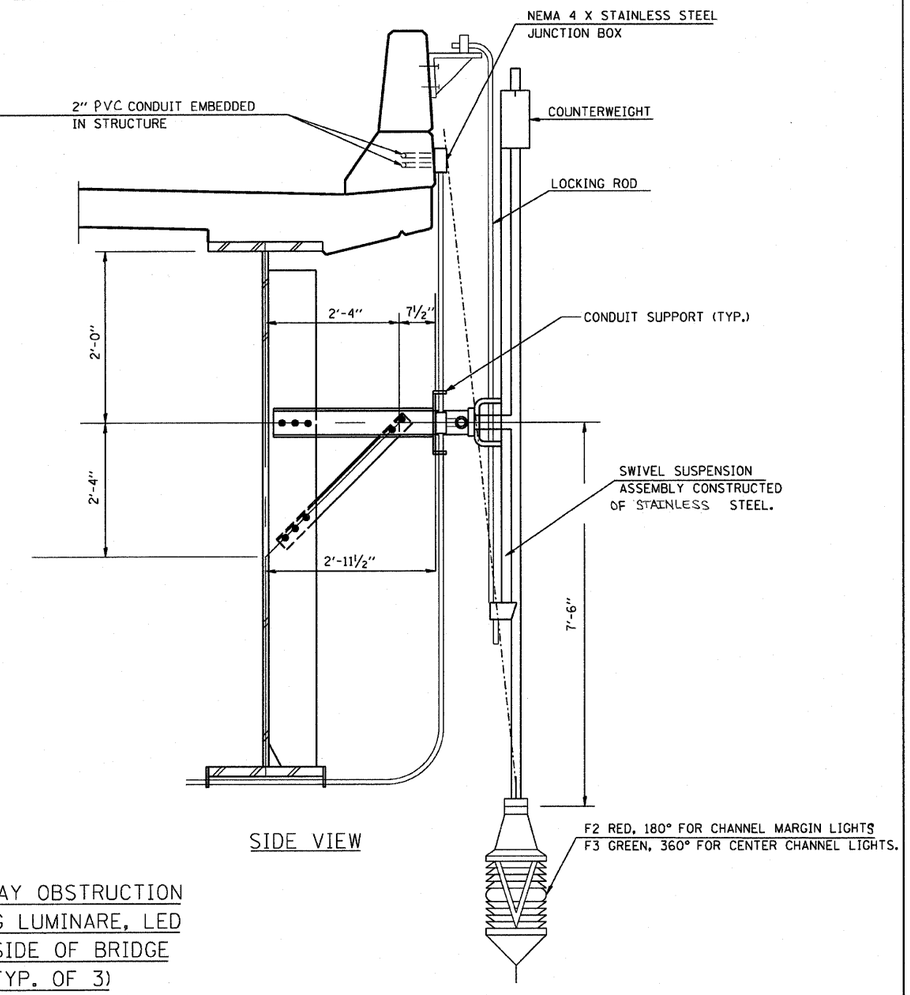

SIDE VIEW

ANCHOR BOLTS

(FOR NAVIGATION LIGHT HARDWARE MOUNTED ON THE CONCRETE PARAPET)

1. THE CONTRACTOR SHALL USE THE CAPSULE OR THE ADHESIVE CARTRIDGE TYPE ANCHOR RODS THAT HAVE BEEN PREVIOUSLY TESTED AND GIVEN A PRIOR APPROVAL BY THE DEPARTMENT. THE CONTRACTOR SHALL INSTALL THESE ANCHOR RODS IN PRE-DRILLED HOLES IN ACCORDANCE WITH MANUFACTURES RECOMMENDATIONS AND PROCEDURES.
2. THE CAPSULEOR THE ADHESIVE CARTRIDGE TYPE ANCHOR RODS SHALL BE A TWO PART SYSTEM COMPOSED OF:
   A. A THREADED ROD STUD WITH A NUT AND WASHER OF THE TYPE SPECIFIED.
   B. A SEALED GLASS CAPSULE OR A SEALED GLASS ADHESIVE CARTRIDGE CONTAINING PREMEASURED AMOUNTS OF THE ADHESIVE CHEMICAL.

WATERWAY OBSTRUCTION WARNING LUMINARE, LED EAST SIDE OF BRIDGE (TYP. OF 3)

N.T.S.

REVISIONS	
NAME	DATE

ILLINOIS DEPARTMENT OF TRANSPORTATION

ELECTRICAL DETAILS
IL 170 BRIDGE REPLACEMENT AT SENECA

SCALE: 1" = 50'
DATE: OCTOBER, 2007
DRAWN BY CJO
CHECKED BY JCL

PLOT DATE = 10/4/2007
FILE NAME = $FILEL$
PLOT SCALE = $SCALE$
USER NAME = project

CONTRACT NO. 66607

EarthTech
A Tyco International Ltd. Company

F.A.P. RTE.	SECTION	COUNTY	TOTAL SHEETS	SHEET NO.
786	(109) BR	LASALLE	351	188
STA.		TO STA.		
FED. ROAD DIST. NO.	ILLINOIS	FED. AID PROJECT		

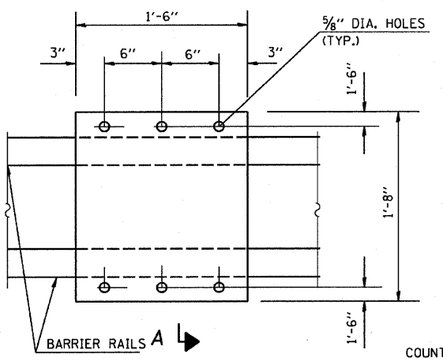

CONNECTION PLATE DETAILS

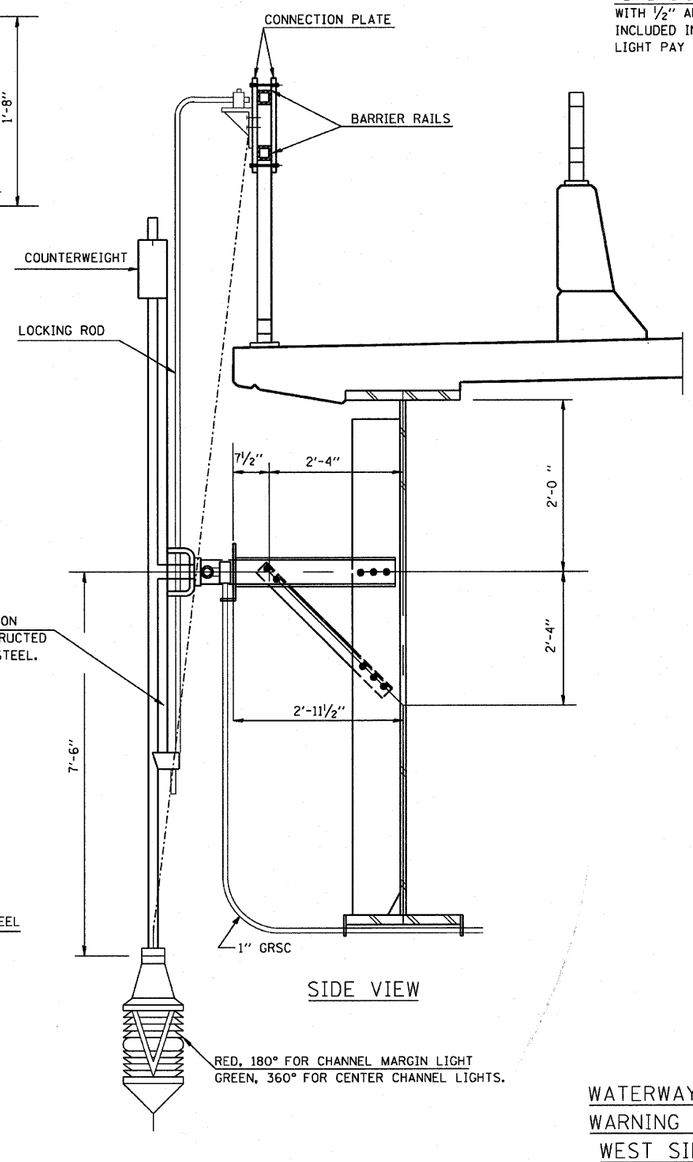

SIDE VIEW

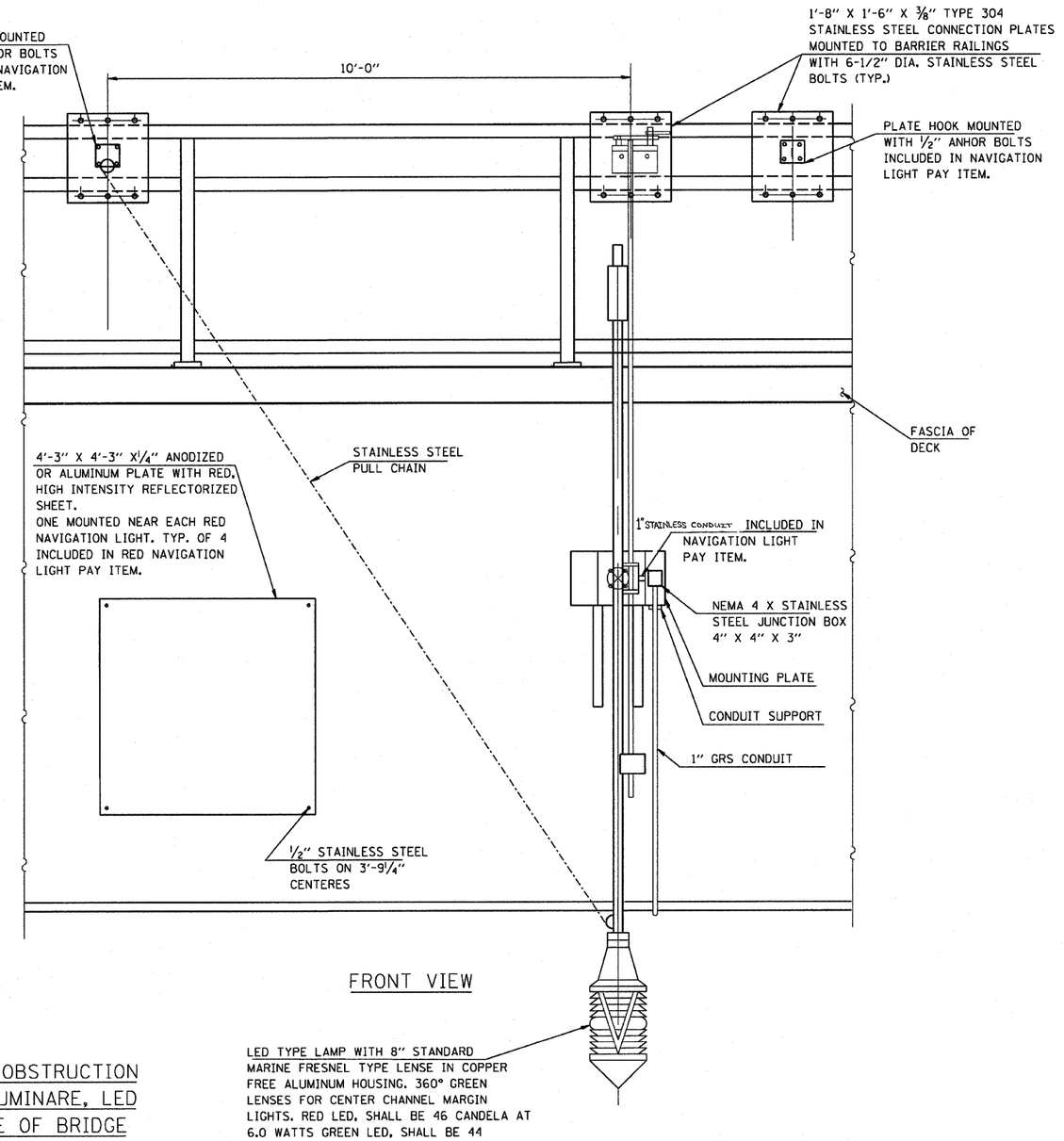

FRONT VIEW

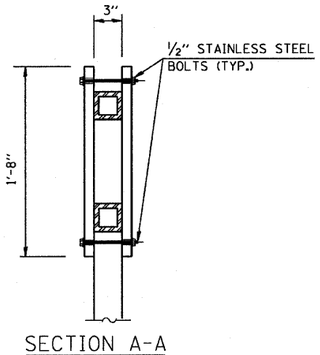

SECTION A-A

LED TYPE LAMP WITH 8" STANDARD MARINE FRESNEL TYPE LENSE IN COPPER FREE ALUMINUM HOUSING. 360° GREEN LENSES FOR CENTER CHANNEL MARGIN LIGHTS. RED LED, SHALL BE 46 CANDELA AT 6.0 WATTS GREEN LED, SHALL BE 44 CANDELA AT 8.4 WATTS.

WATERWAY OBSTRUCTION WARNING LUMINARE, LED WEST SIDE OF BRIDGE (TYP. OF 3)

NOTES:
FOR LOCK BRACKET DETAILS SEE SHEET 188

REVISIONS	
NAME	DATE

ILLINOIS DEPARTMENT OF TRANSPORTATION

ELECTRICAL DETAILS
IL 170 BRIDGE REPLACEMENT AT SENECA

SCALE: 1" = 50'
DATE: OCTOBER, 2007
DRAWN BY CJO
CHECKED BY JCL

PLOT DATE = 10/4/2007
FILE NAME = $$FILL$$
PLOT SCALE = $$SCALE$$
USER NAME = project

CONTRACT NO. 66607

EarthTech
A Tyco International Ltd. Company

F.A.P. RTE.	SECTION	COUNTY	TOTAL SHEETS	SHEET NO.
786	(109) BR	LASALLE	351	189
STA.		TO STA.		
FED. ROAD DIST. NO.	ILLINOIS	FED. AID PROJECT		

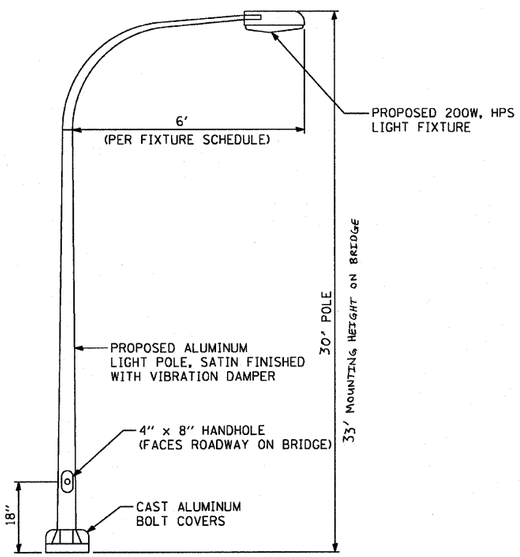

LIGHT POLE DETAIL

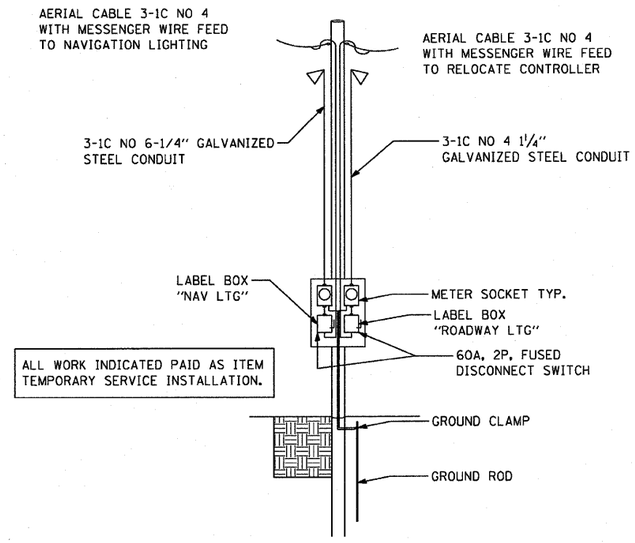

ALL WORK INDICATED PAID AS ITEM TEMPORARY SERVICE INSTALLATION.

TEMPORARY SERVICE DETAIL

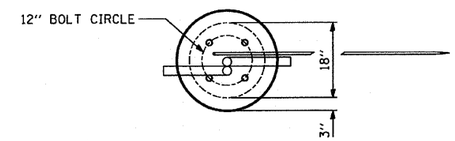

TOP VIEW

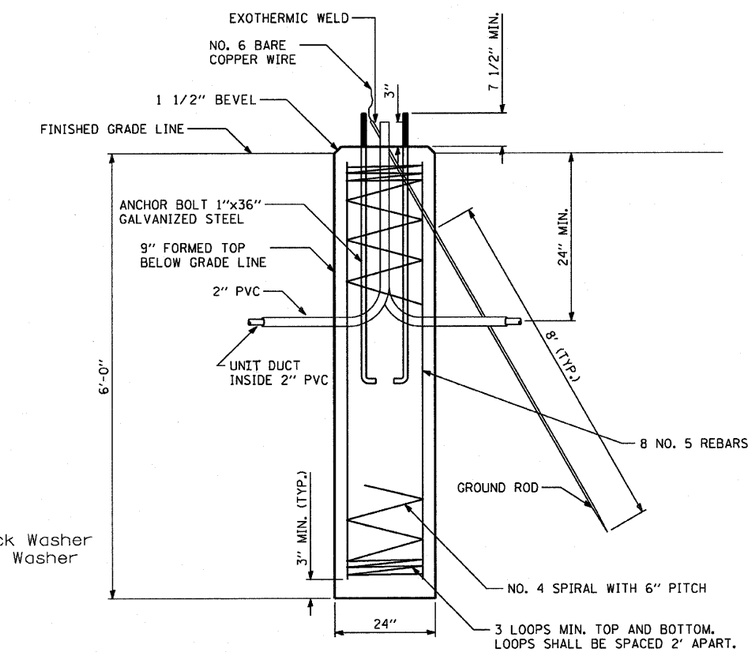

ROADWAY POLE FOUNDATION

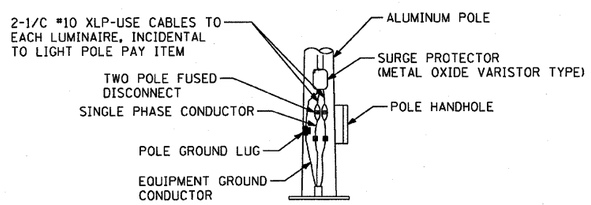

POLE BASE WIRING

NOTES:

ACCESSORIES AND POLE WIRING ARE TO BE INCIDENTAL TO COST OF THE LUMINAIRE PAY ITEM.

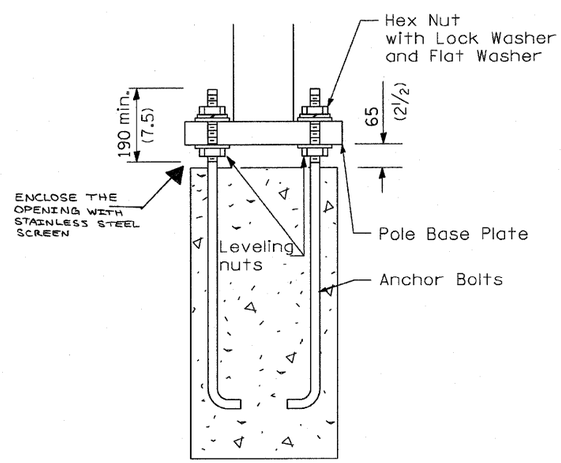

POLE MOUNTING DETAIL

LIGHT FIXTURE SCHEDULE						
ID	TYPE	BULB	VOLTS	DESCRIPTION	DAVIT ARM	MTG. HT.
A1 - 6 B1 - 6	F1	250W HPS S66VA-200	240	IES TYPE III-S-C, FLAT GLASS LENS	6'	30'
C3,4	F3	44 Cd - GREEN	120	CHANNEL MARKER, 360 DEGREE SINGLE LENS, LED TYPE	NA	NA
C1,2,5,6	F2	46 Cd - RED	120	CHANNEL MARKER, 180 DEGREE SINGLE LENS, LED TYPE	NA	NA
D1,2	F4	250W HPS S66VA-200	240	IES TYPE III-S-C, FLAT GLASS LENS	6'	30'

REVISIONS	
NAME	DATE

ILLINOIS DEPARTMENT OF TRANSPORTATION

ELECTRICAL DETAILS
IL 170 BRIDGE REPLACEMENT AT SENECA

SCALE: 1" = 50'
DATE: OCTOBER, 2007
DRAWN BY CJO
CHECKED BY JCL

PLOT DATE = 10/4/2007
FILE NAME = $FILE$
PLOT SCALE = $SCALE$
USER NAME = $USER$

CONTRACT NO. 66607

EarthTech
A Tyco International Ltd. Company

F.A.P. RTE.	SECTION	COUNTY	TOTAL SHEETS	SHEET NO.
786	(109) BR	LASALLE	351	190
STA.		TO STA.		
FED. ROAD DIST. NO.	ILLINOIS	FED. AID PROJECT		

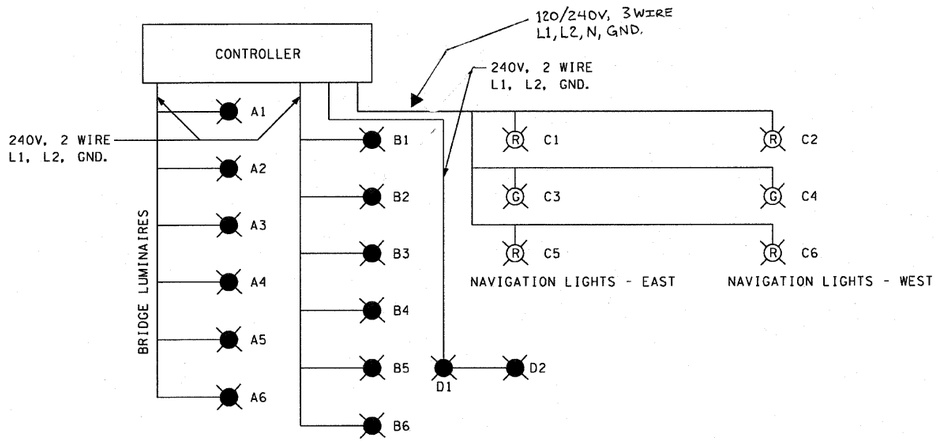

POWER REQUIREMENTS

CONTROLLER #1:

SERVICE - 120/240 V, 1 PHASE, 3W, 60A

CIRCUIT A	6x250W	= 1500W
CIRCUIT B	6x250W	= 1500W
CIRCUIT C	6x15W	= 90W
CIRCUIT D	2x250w	= 500W
TOTAL LOAD		3590 WATTS

ILLINOIS DEPARTMENT OF TRANSPORTATION
LUMINAIRE PERFORMANCE TABLE

GIVEN CONDITIONS

ROADWAY DATA:	Pavement Width	12	FT
	Number Of Lanes	2	
	Median Width	n/a	FT
	IES Surface Classification		R3
	Q-Zero Value		.07
LIGHT POLE DATA:	Mounting Height	33	FT
	Mast Arm Length	6	FT
	Pole Set-Back From Edge Of Pavement	5	FT
LUMINAIRE DATA:	Lamp Type	HPS	
	Lamp Lumens	28000	
	IES Vertical Distribution	M	
	IES Control Of Distribution	C	
	IES Lateral Distribution	3	
	Total Light Loss Factor	0.684	
LAYOUT DATA:	Spacing	140	FT
	Configuration	1 side	
	Luminaire Overhang Over Edge Of Pavement Lane	1	FT

NOTE: Variations from the above specified IES distribution pattern may be requested and acceptance of variations will be subject to review by the Engineer based on how well the performance requirements are met.

PERFORMANCE REQUIREMENTS

NOTE: These performance requirements shall be the minimum acceptable standards of photometric performance for the luminaire, based on the given conditions listed above.

ILLUMINATION:	Average Horizontal Illumination, (E_{Ave})	0.9	Lux
	Uniformity Ratio, (E_{Ave}/E_{Min})	3.0	
LUMINANCE:	Average Luminance: (L_{Ave})	0.6	Cd/m²
	Uniformity Ratios: (L_{Ave}/L_{Min})	3.5	
	(L_{Max}/L_{Min})	6.0	
	Maximum Veiling Luminance Ratio: (L_v/L_{Ave})	0.3	

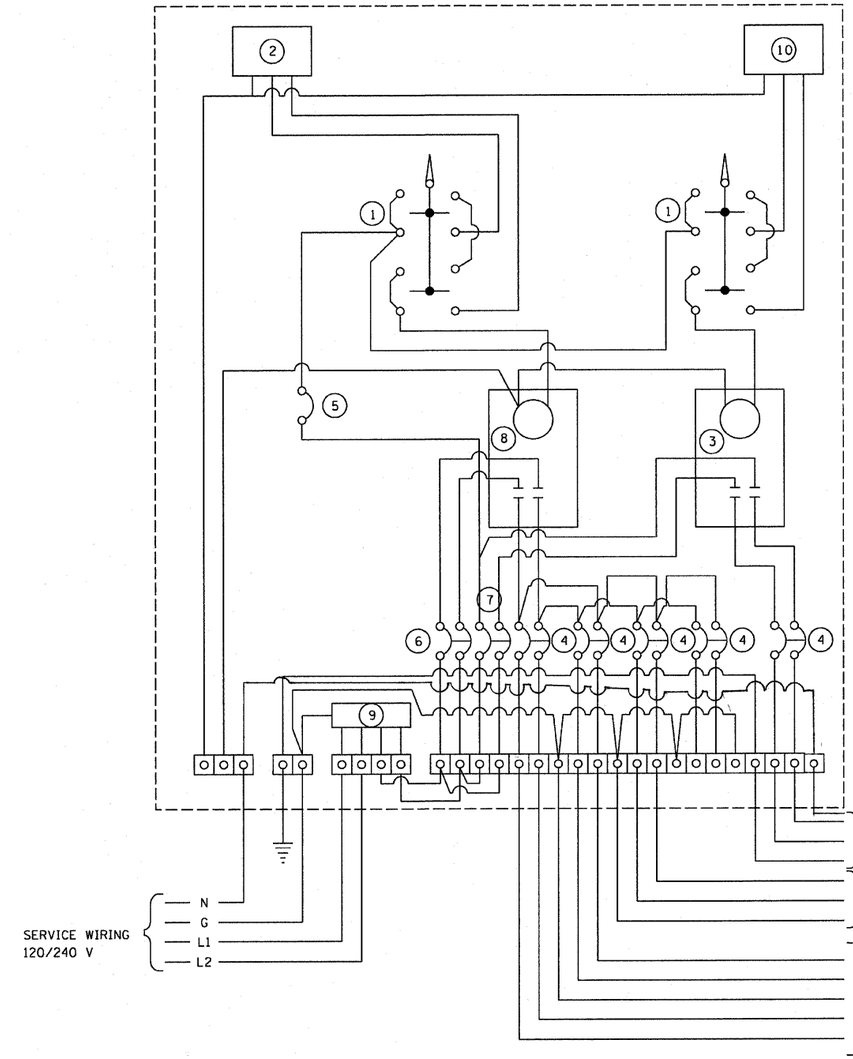

WIRING DIAGRAM

GENERAL NOTES:

WIRING SHALL BE PANEL BOARD FASHION. ALL BENDS SHALL BE RIGHT ANGLES. ALL RUNS SHALL BE VERTICAL OR PARALLEL TO PANEL BOARD. WIRES SHALL BE GROUPED OR LACED.

ALL CONTROL INSTALLATION COMPONENTS SHALL BE U.L. LISTED.

LABEL EQUIPMENT GROUND AND NEUTRAL.

LOCATE SERVICE POLE AND CONTROL INSTALLATION ADJACENT TO R.O.W. LINE WITH A MINIMUM DISTANCE OF 30' FROM THE EDGE OF PAVEMENT. EXACT LOCATION SHALL BE ESTABLISHED BY THE ENGINEER.

THE UNDERGROUND SERVICE ENTRANCE WIRING SHALL NO EXCEED 150'. TOTAL AERIAL AND UNDERGROUND SERVICE BETWEEN THE CONTROL INSTALLATION AND PRIMARY TRANSFORMER SHALL NOT EXCEED 250'.

RACEWAYS SHALL TERMINIATE 3" ABOVE TOP OF CONCRETE FOUNDATION.

NOTES:

1. H-O-A SWITCH WITH ENGRAVED NAMEPLATE AS DETAILED.
2. PHOTOCELL WITH INTEGRAL SURGE SUPPRESSOR.
3. CONTACTOR, 30A, 2P, 120V COIL, ELECTRICALLY HELD.
4. CIRCUIT BREAKER 20A, 2P, 240V, INCLUDE 2 SPARE.
5. CIRCUIT BREAKER 20A, 1P, 120 V.
6. MAIN CIRCUIT BREAKER, 60A, 2P, 240V.
7. MAIN CIRCUIT BREAKER, 30A, 2P, 240V.
8. CONTACTOR, 100 A, 2P, 120V COIL, ELECTRICALLY HELD.
9. SURGE ARRESTER.
10. NAVIGATION PHOTOCELL WITH U.S. COAST GUARD APPROVED SETTINGS.

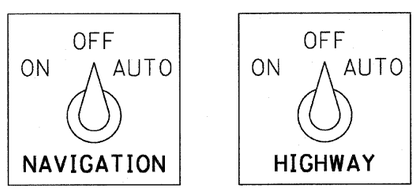

SWITCH NAMEPLATES

REVISIONS NAME	DATE

ILLINOIS DEPARTMENT OF TRANSPORTATION

ELECTRICAL SCHEMATICS
IL 170 BRIDGE REPLACEMENT AT SENECA

SCALE: 1" = 50'
DATE: OCTOBER, 2007
DRAWN BY CJO
CHECKED BY JCL

PLOT DATE = 10/4/2007
FILE NAME = $FILE$
PLOT SCALE = $SCALE$
USER NAME = project

CONTRACT NO. 66607

EarthTech
A Tyco International Ltd. Company

F.A.P. RTE.	SECTION	COUNTY	TOTAL SHEETS	SHEET NO.
786	(109) BR	LASALLE	351	191
STA.		TO STA.		
FED. ROAD DIST. NO.	ILLINOIS	FED. AID PROJECT		

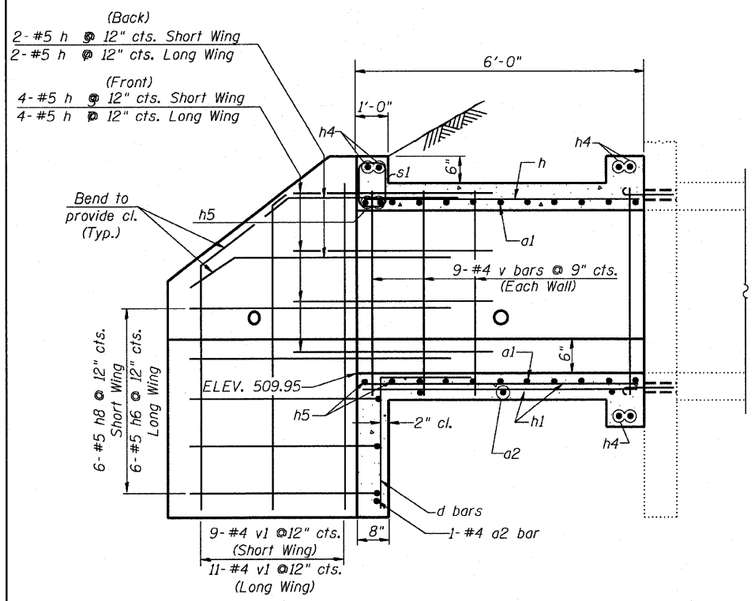

HALF LONG SECTION
N.T.S.

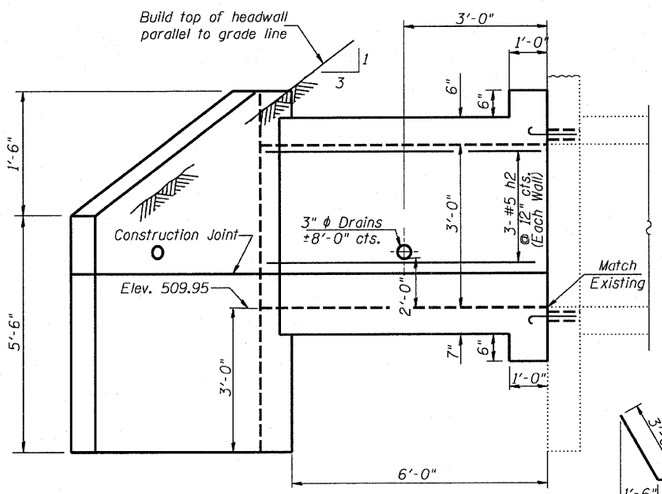

SHOWING OUTLINES
N.T.S.

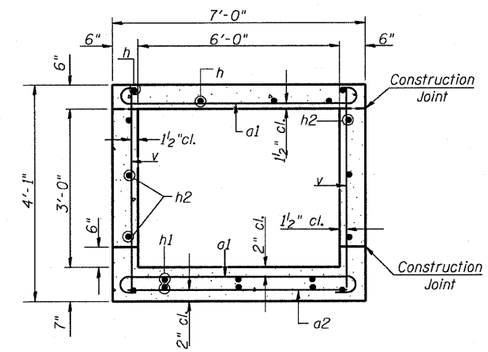

SECTION THRU BARREL
N.T.S.

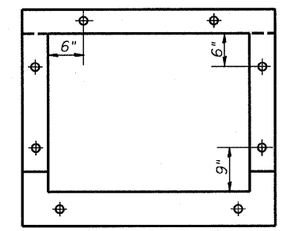

Sidewalls . . . . . 2 @ 21 " Cts.
Top & Bottom . . 5 @ 15 " Cts.

EXPANSION BOLT LOCATION
N.T.S.

Note: Expansion bolts shall consist of self drilling expansion shield and ¾" diameter hooked bolts. Hooked bolts shall extend a minimum of 9" into new concrete.
Minimum Certified Proof Load = 4,080 lbs

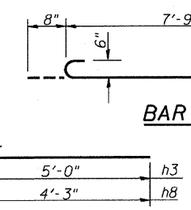

BAR a1

BARS h3 & h8

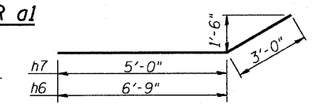

BARS h6 & h7

BILL OF MATERIAL

Bar	No.	Size	Length	Shape
a1	28	#6	9'-1"	
a2	6	#4	7'-9"	
d	7	#5	4'-6"	
h	9	#5	6'-8"	
h1	14	#4	6'-8"	
h2	6	#5	6'-8"	
h3	6	#5	8'-0"	
h4	6	#6	7'-9"	
h5	4	#6	7'-9"	
h6	6	#5	9'-9"	
h7	6	#5	8'-0"	
h8	6	#5	7'-3"	
v	20	#4	3'-9"	
v1	20	#4	6'-8"	
s1	8	#4	3'-9"	
Conc. Box Culv.			Cu. Yds.	5.0
Reinforcement Bars			Lbs	1,100
Expansion Bolts ¾" x 18"			Each	14

HALF ELEVATION

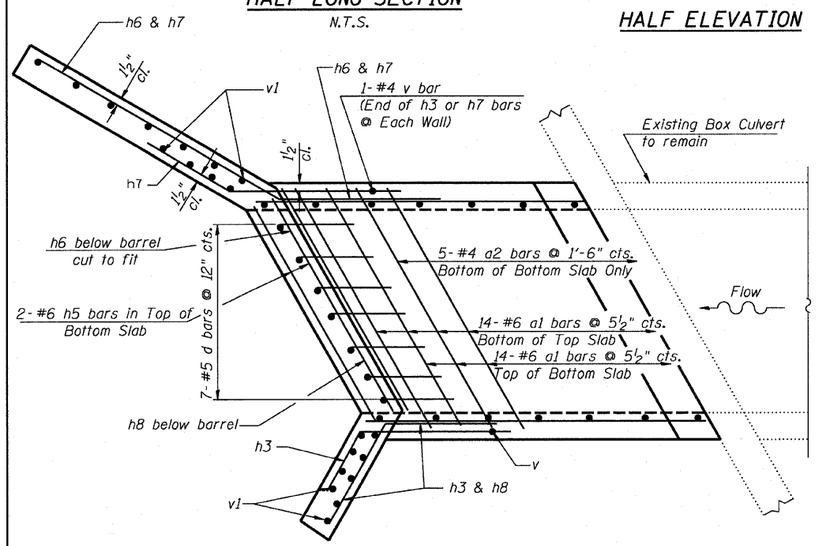

SHOWING REINFORCEMENT
N.T.S.

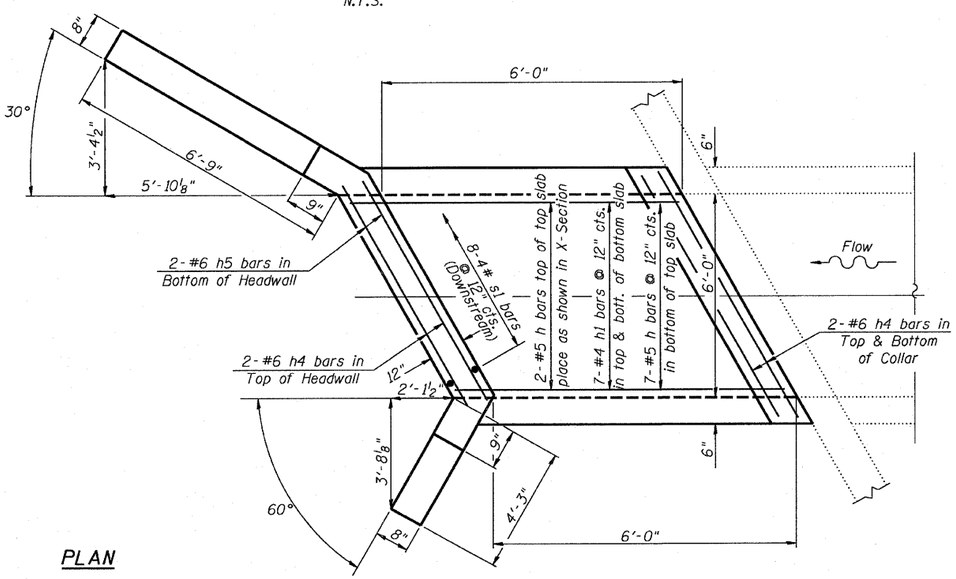

PLAN

SHOWING OUTLINES
N.T.S.

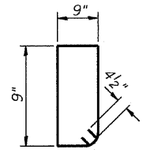

BAR s1
(Downstream)

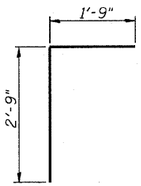

BAR d

GENERAL NOTES

Class SI Concrete shall be used throughout.
At least six feet of Barrel shall be poured monolithically with wingwalls.
Exposed edges shall be beveled ¾".
For backfilling and embankments see Standard Specifications.
Tilt hook of a1 bars, if necessary, to obtain 1½" minimum clearance at top of hook.

Reinforcement Bars shall conform to the requirements of AASHTO M-31, M-42 or M-53, Grade 60.

DESIGN STRESSES

fy= 60,000 p.s.i.
f'c= 3,500 p.s.i.

LOADING HS 20-44 & ALT.

REVISIONS	
NAME	DATE

ILLINOIS DEPARTMENT OF TRANSPORTATION

BOX CULVERT EXTENSION
STATION 96+45.63

SCALE:
DATE: JUNE 29, 2007
DRAWN BY JHR
CHECKED BY CLS

PLOT DATE = 10/4/2007
FILE NAME = $FILEL$
PLOT SCALE = $SCALE$
USER NAME = $USER$

Bench Mark: Chiseled square on N-E side of manhole rim at the intersection of IL 170 and South Street. Elevation 508.497.

Existing Structure: None.

STATE OF ILLINOIS
DEPARTMENT OF TRANSPORTATION

F.A.P. ROUTE NO.	SECTION	COUNTY	TOTAL SHEETS	SHEET NO.
786	109 BR	La Salle	351	192
FED. ROAD DIST. NO. 7		ILLINOIS	FED. AID PROJECT-	

SHEET NO. 1
6 SHEETS

Contract #66607

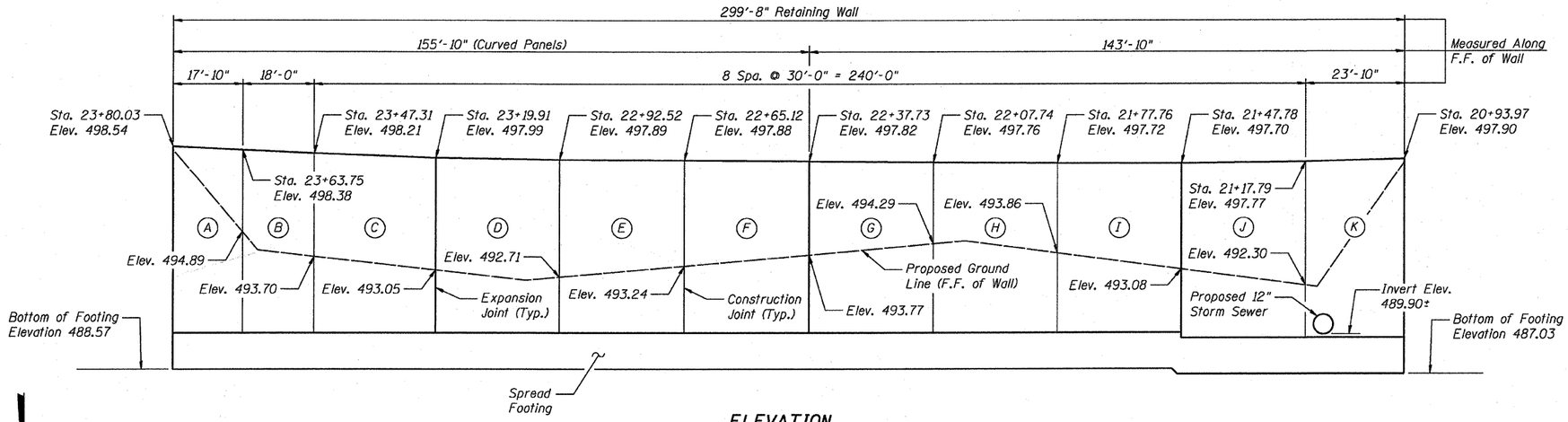

ELEVATION
(Looking South @ F.F. of wall)

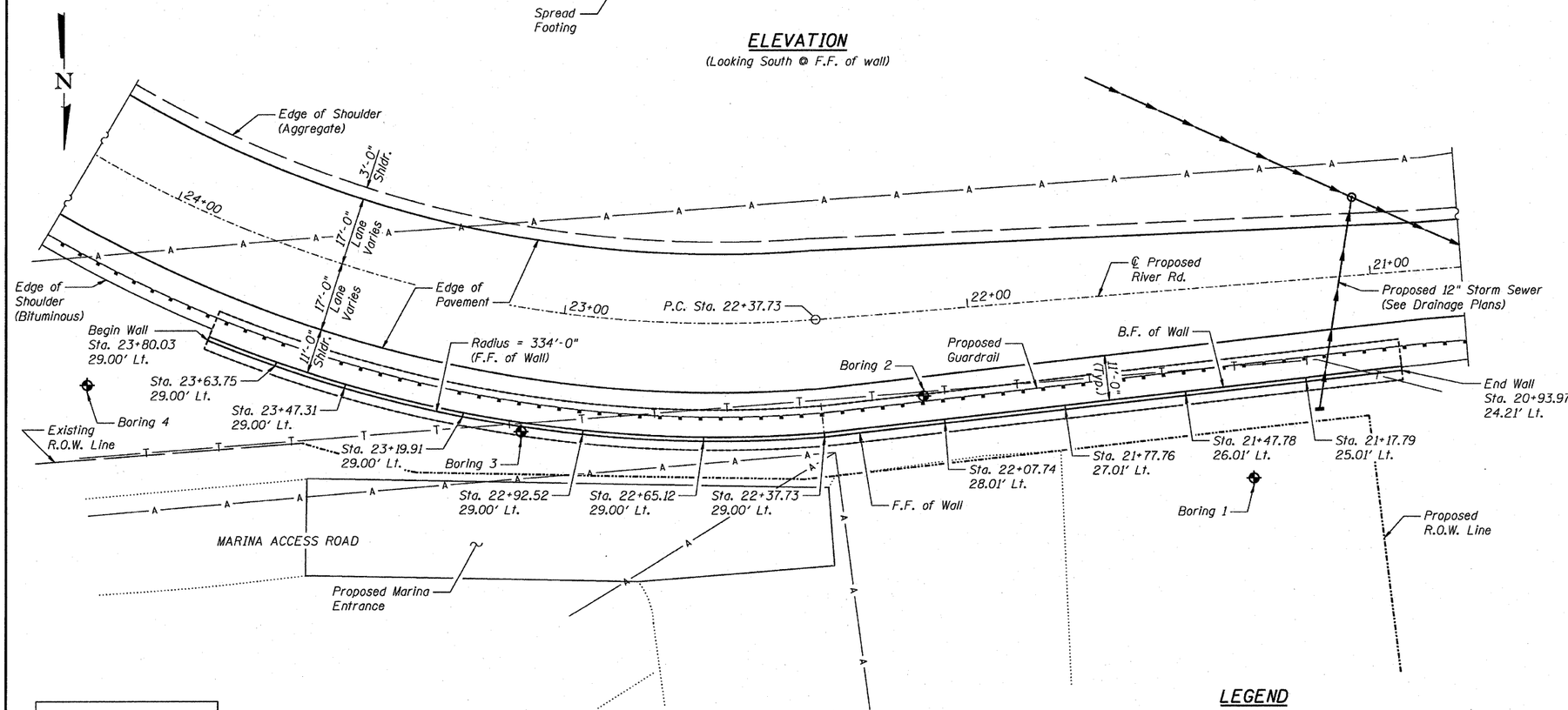

PLAN

Note:
Offsets are measured from the ℄ of proposed River Rd. to the front face of wall.

LEGEND

- T — Telephone
- A — Aerial Elec.
- Storm Sewer
- Soil Borings
- F.F. - Front Face
- B.F. - Back Face
- E.F. - Each Face

DESIGNED	JVR
CHECKED	DLS
DRAWN	JVR
CHECKED	DLS

LIN ENGINEERING, LTD.
Consulting Engineers
Chatham, Illinois

INDEX OF SHEETS

1. General Plan
2. General Data
3. Panels A, B & C
4. Panels D, E & F
5. Panels G, H & I
6. Panels J & K

DESIGN SPECIFICATIONS
2002 AASHTO

DESIGN STRESSES
FIELD UNITS

f'c = 3,500 psi
fy = 60,000 psi (Reinforcement)

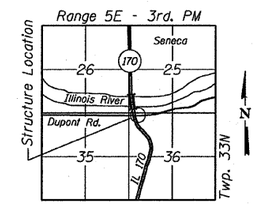

LOCATION SKETCH

LICENSED STRUCTURAL ENGINEER
MICHAEL T. HALEY
81-5991
CHATHAM
STATE OF ILLINOIS

Michael T. Haley 10-5-07
Michael T. Haley — Date
Licensed Structural Engineer
State of Illinois No. 81-5991
Expires 11/30/2008

GENERAL PLAN
RETAINING WALL
RIVER ROAD
SECTION 109 BR
LA SALLE COUNTY

STATE OF ILLINOIS
DEPARTMENT OF TRANSPORTATION

F.A.P. ROUTE NO.	SECTION	COUNTY	TOTAL SHEETS	SHEET NO.
786	109 BR	La Salle	351	193
FED. ROAD DIST. NO. 7		ILLINOIS	FED. AID PROJECT-	

SHEET NO. 2
6 SHEETS

Contract #66607

GENERAL NOTES

Reinforcement bars shall conform to the requirements of ASTM A 706 Gr 60 (IL Modified). See Special Provisions.

Reinforcement bars designated (E) shall be epoxy coated.

All exposed concrete edges shall have a $\frac{3}{4}$" chamfer, except where shown otherwise. Chamfer on vertical edges shall be continued a minimum of one foot below finished ground level.

TOTAL BILL OF MATERIAL

ITEM	UNIT	TOTAL
Structure Excavation	Cu. Yd.	704
Porous Granular Embankment	Cu. Yd.	78
Porous Granular Embankment (Special)	Cu. Yd.	162
Concrete Structures	Cu. Yd.	280.4
Reinforcement Bars, Epoxy Coated	Pound	16860
Geocomposite Wall Drain	Sq. Yd.	122

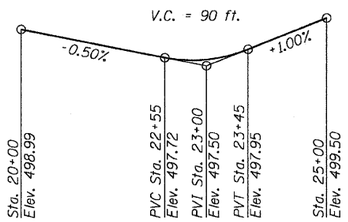

PROFILE GRADE

(along ℄ Proposed River Rd.)

CURVE DATA

Δ = 57° 51' 18" (RT)
D = 18° 47' 08"
T = 168.56'
L = 307.98'
E = 43.48'
R = 305.00'
S.E. = See S.E. Transition Diagram
P.C. = Sta. 22+37.73
P.T. = Sta. 25+45.70
P.I. = Sta. 24+06.29

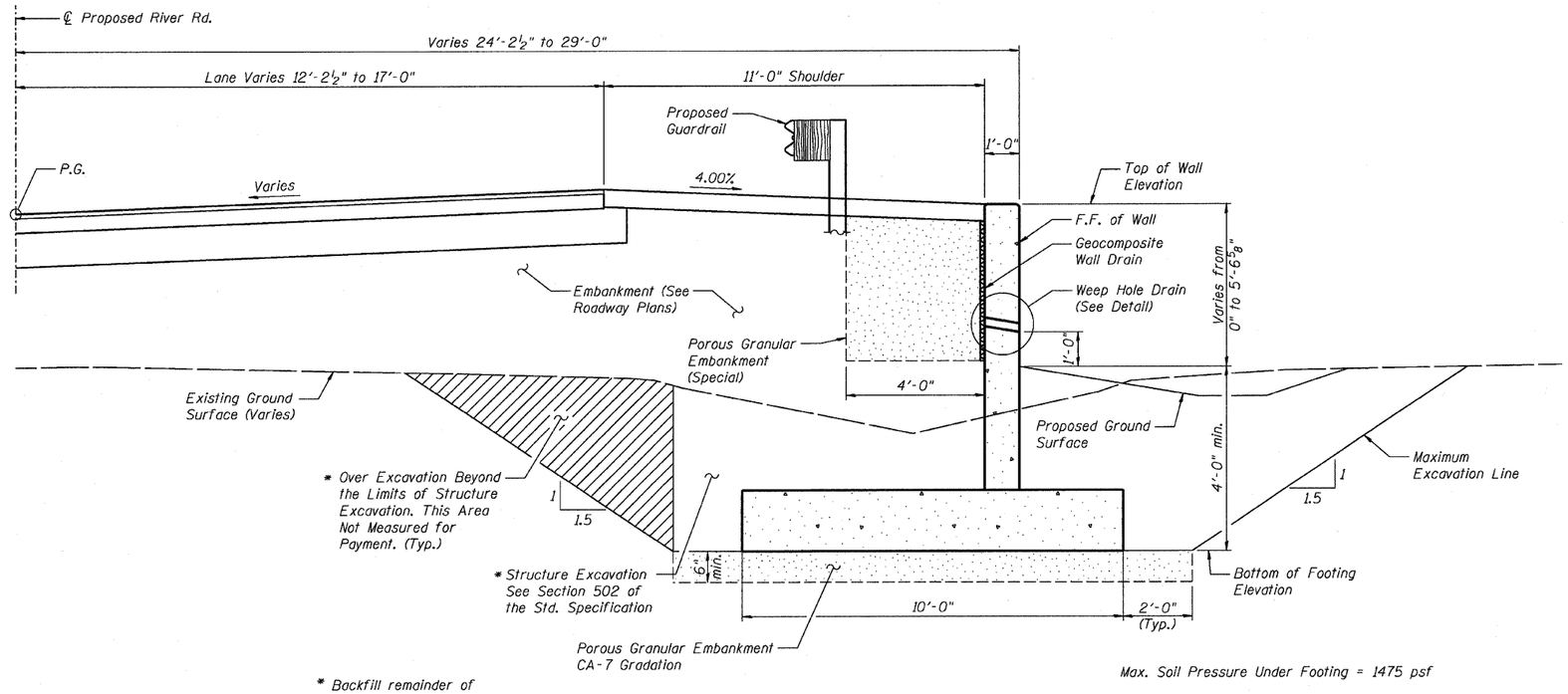

* Backfill remainder of structure excavation and over excavation with same material specified for roadway embankment.

Max. Soil Pressure Under Footing = 1475 psf

TYPICAL WALL SECTION

(Looking West)

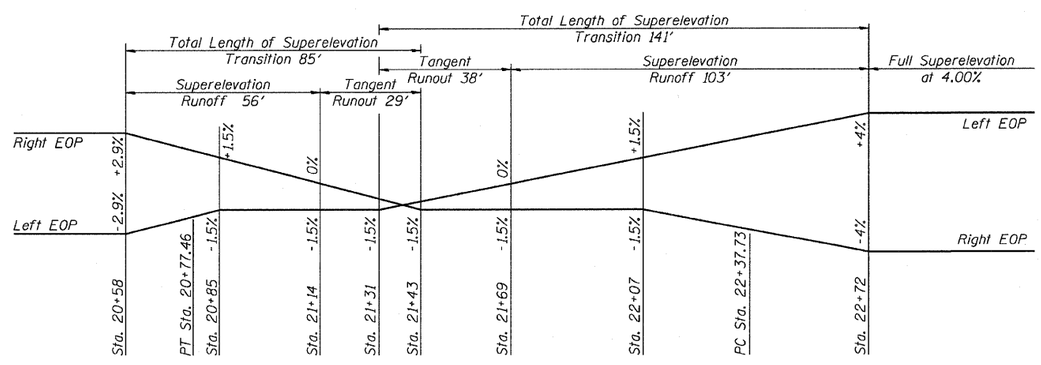

SUPERELEVATION TRANSITION DIAGRAM

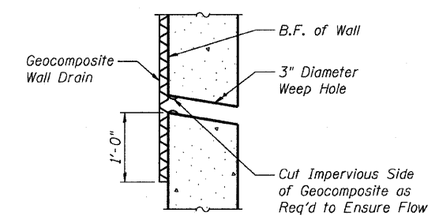

WEEP HOLE DRAIN DETAIL

DESIGNED	JVR
CHECKED	DLS
DRAWN	JVR
CHECKED	DLS

LIN ENGINEERING, LTD.
Consulting Engineers
Chatham, Illinois

GENERAL DATA
RETAINING WALL
RIVER ROAD
SECTION 109 BR
LA SALLE COUNTY

STATE OF ILLINOIS
DEPARTMENT OF TRANSPORTATION

F.A.P. ROUTE NO.	SECTION	COUNTY	TOTAL SHEETS	SHEET NO.
786	109 BR	La Salle	351	194
FED. ROAD DIST. NO. 7		ILLINOIS	FED. AID PROJECT-	

SHEET NO. 3
6 SHEETS

Contract #66607

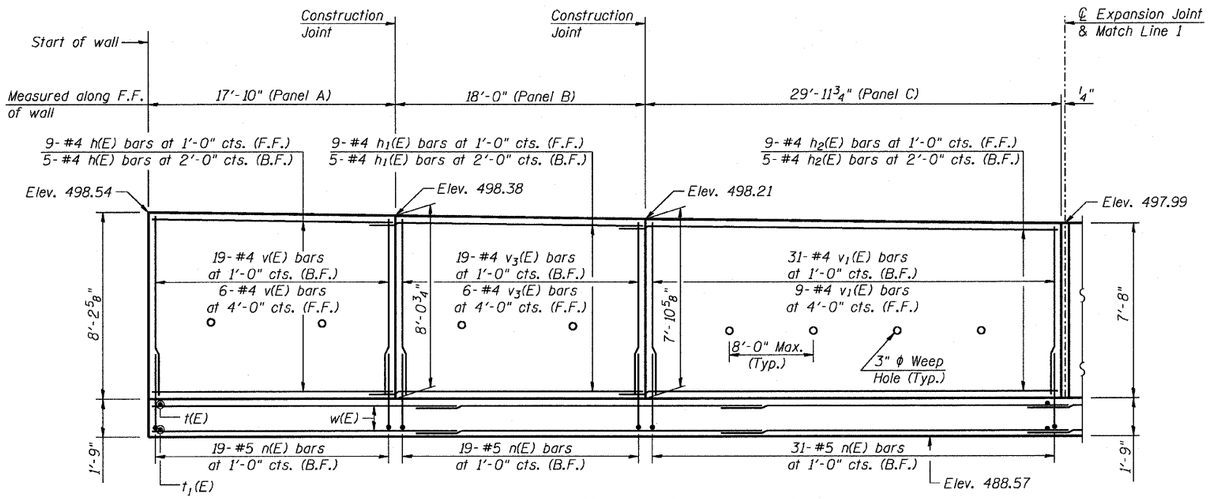

ELEVATION OF PANELS A TO C
(Front Face of Wall)

MIN BAR LAP
#4 Bars= 1'-8"
#5 Bars= 2'-2"

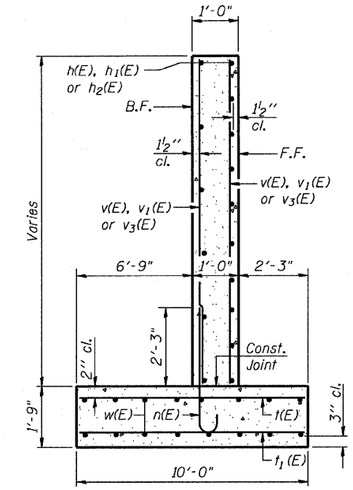

SECTION THRU WALL

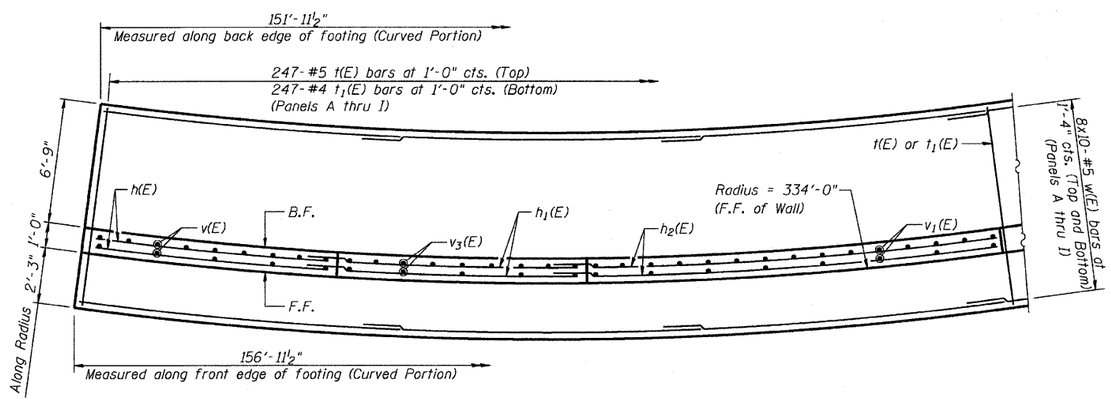

FOOTING PLAN OF PANELS A TO C

N

Notes:
Bend w(E), h(E), h_1(E) and h_2(E) bars to match curve.
Bars indicated thus 8x10-#5, etc., indicates 8 lines of bars with 10 lengths of #5 bars per line.
See Sheet 6 of 6 for Joint Details, Bar Bends and Bar List.

DESIGNED	JVR
CHECKED	DLS
DRAWN	JVR
CHECKED	DLS

LIN ENGINEERING, LTD.
Consulting Engineers
Chatham, Illinois

PANELS A, B & C
RETAINING WALL
RIVER ROAD
SECTION 109 BR
LA SALLE COUNTY

STATE OF ILLINOIS
DEPARTMENT OF TRANSPORTATION

F.A.P. ROUTE NO.	SECTION	COUNTY	TOTAL SHEETS	SHEET NO.
786	109 BR	La Salle	351	195
FED. ROAD DIST. NO. 7		ILLINOIS	FED. AID PROJECT-	

SHEET NO. 4
6 SHEETS

Contract #66607

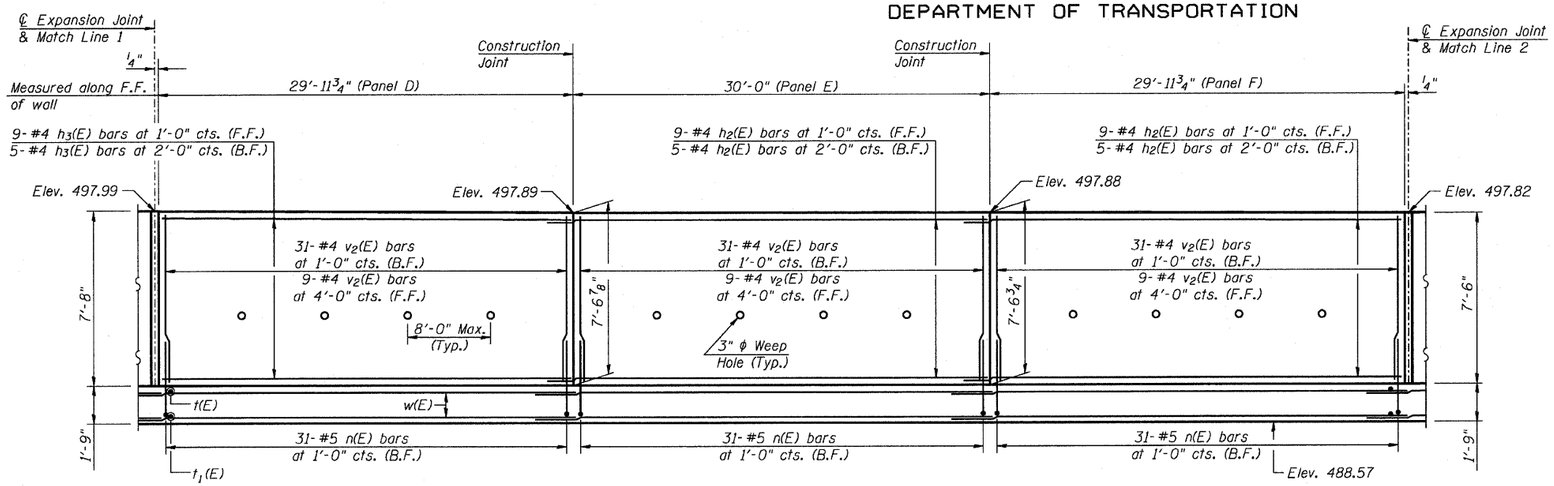

ELEVATION OF PANELS D TO F

(Front Face of Wall)

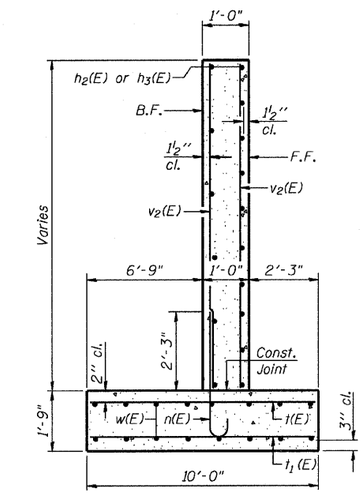

SECTION THRU WALL

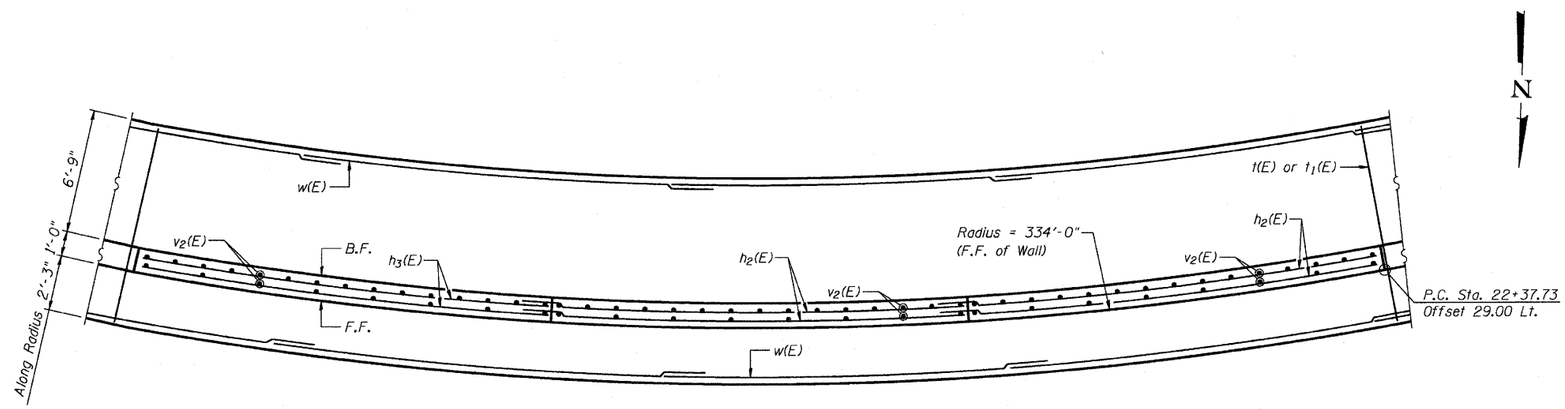

FOOTING PLAN OF PANELS D TO F

MIN BAR LAP

#4 Bars= 1'-8"
#5 Bars= 2'-2"

Notes:
Bend w(E), h_2(E) and h_3(E) bars to match curve.
See Sheet 6 of 6 for Joint Details, Bar Bends and Bar List.

DESIGNED	JVR
CHECKED	DLS
DRAWN	JVR
CHECKED	DLS

LIN ENGINEERING, LTD.
Consulting Engineers
Chatham, Illinois

PANELS D, E & F
RETAINING WALL
RIVER ROAD
SECTION 109 BR
LA SALLE COUNTY

STATE OF ILLINOIS
DEPARTMENT OF TRANSPORTATION

F.A.P. ROUTE NO.	SECTION	COUNTY	TOTAL SHEETS	SHEET NO.	
786	109 BR	La Salle	351	196	SHEET NO. 5 / 6 SHEETS
FED. ROAD DIST. NO. 7		ILLINOIS	FED. AID PROJECT-		

Contract #66607

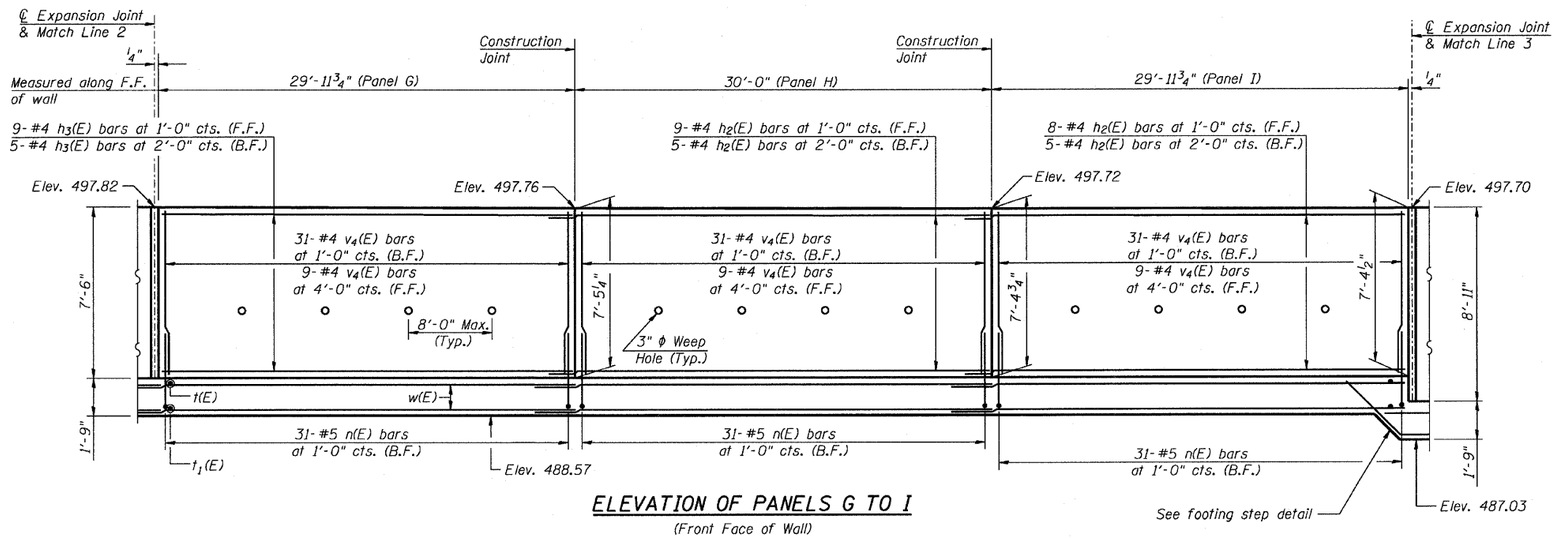

ELEVATION OF PANELS G TO I

(Front Face of Wall)

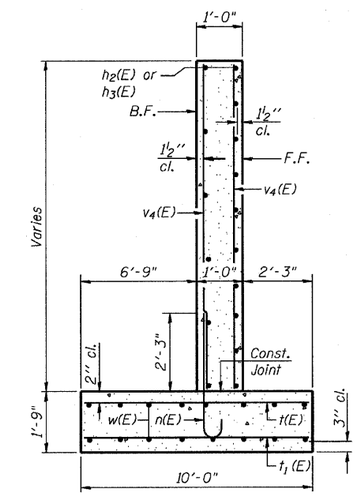

SECTION THRU WALL

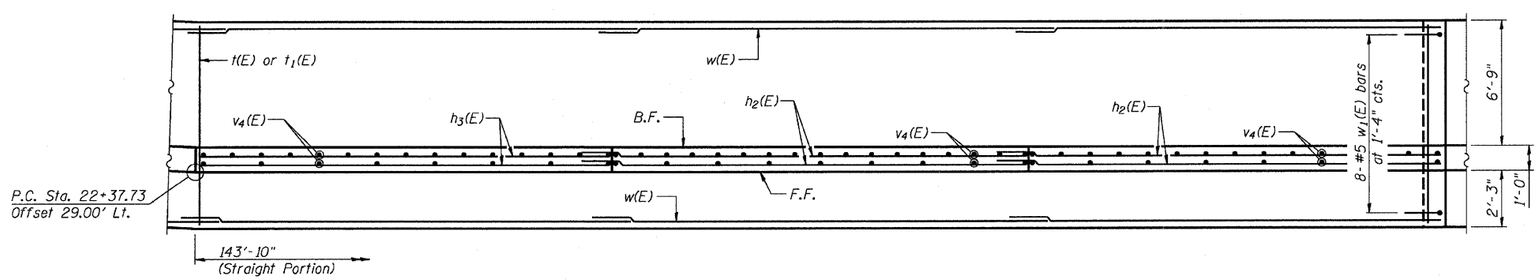

FOOTING PLAN OF PANELS G TO I

N

MIN BAR LAP

#4 Bars= 1'-8"
#5 Bars= 2'-2"

Note:
See Sheet 6 of 6 for Joint Details, Bar Bends and Bar List.

DESIGNED	JVR
CHECKED	DLS
DRAWN	JVR
CHECKED	DLS

LIN ENGINEERING, LTD.
Consulting Engineers
Chatham, Illinois

PANELS G, H & I
RETAINING WALL
RIVER ROAD
SECTION 109 BR
LA SALLE COUNTY

STATE OF ILLINOIS
DEPARTMENT OF TRANSPORTATION

F.A.P. ROUTE NO.	SECTION	COUNTY	TOTAL SHEETS	SHEET NO.
786	109 BR	La Salle	351	197
FED. ROAD DIST. NO. 7		ILLINOIS	FED. AID PROJECT-	

SHEET NO. 6
6 SHEETS

Contract #66607

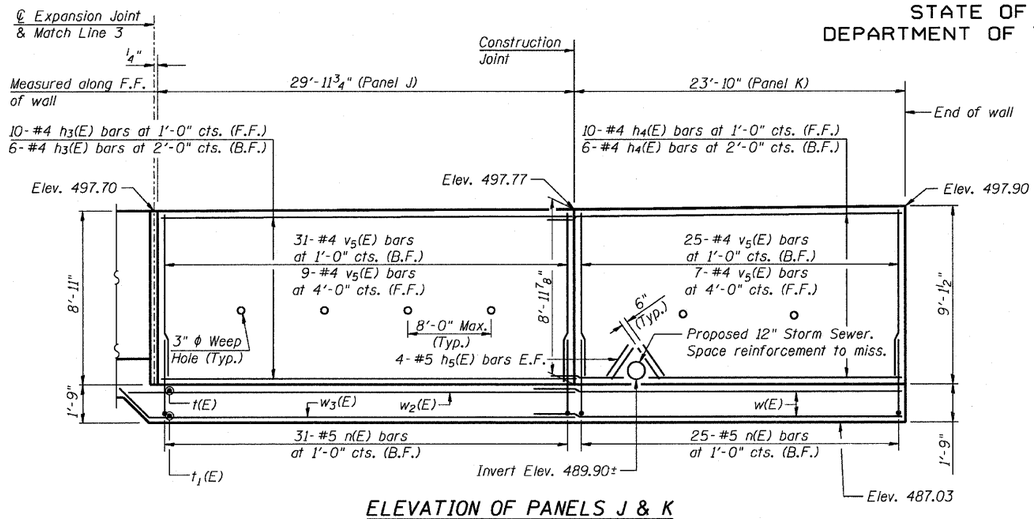

ELEVATION OF PANELS J & K
(Front Face of Wall)

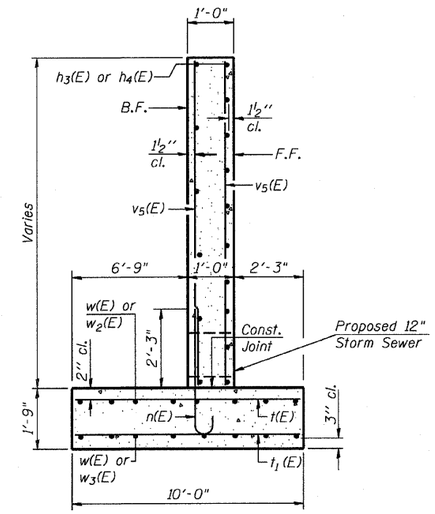

SECTION THRU WALL

BAR LIST

Bar	No.	Size	Length	Shape
h(E)	14	#4	17'-7"	
h1(E)	14	#4	19'-8"	
h2(E)	69	#4	31'-8"	
h3(E)	44	#4	29'-8"	
h4(E)	16	#4	25'-6"	
h5(E)	8	#5	3'-0"	
n(E)	311	#5	4'-3"	
t(E)	302	#5	9'-8"	
t1(E)	302	#4	9'-8"	
v(E)	25	#4	7'-9"	
v1(E)	40	#4	7'-5"	
v2(E)	120	#4	7'-3"	
v3(E)	25	#4	7'-7"	
v4(E)	120	#4	7'-1"	
v5(E)	72	#4	8'-8"	
w(E)	176	#5	26'-8"	
w1(E)	8	#5	5'-0"	
w2(E)	8	#5	31'-6"	
w3(E)	8	#5	33'-9"	

N

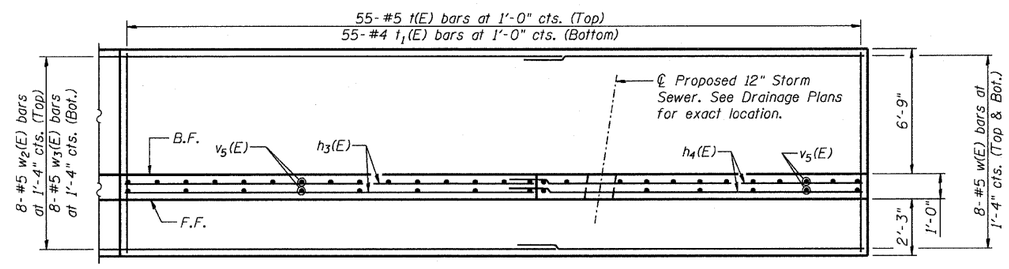

FOOTING PLAN OF PANELS J & K

MIN BAR LAP
#4 Bars= 1'-8"
#5 Bars= 2'-2"

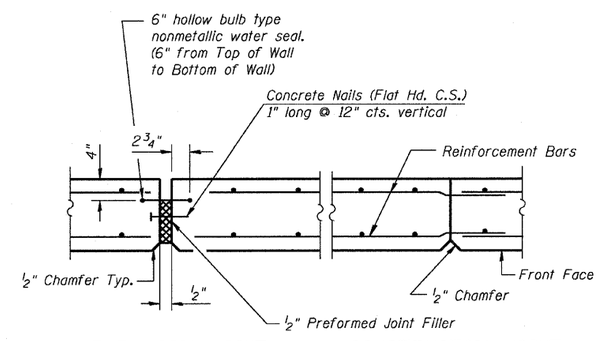

EXPANSION JOINT CONSTRUCTION JOINT

WALL JOINT DETAIL

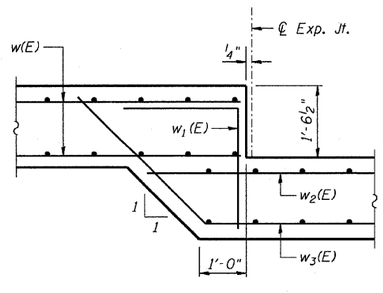

FOOTING STEP DETAIL

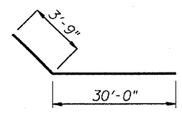

BAR w3(E)

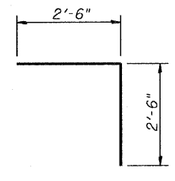

BAR w1(E)

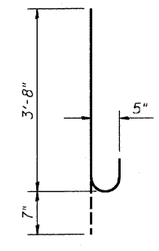

BAR n(E)

DESIGNED	JVR
CHECKED	DLS
DRAWN	JVR
CHECKED	DLS

LIN ENGINEERING, LTD.
Consulting Engineers
Chatham, Illinois

PANELS J & K
RETAINING WALL
RIVER ROAD
SECTION 109 BR
LA SALLE COUNTY

STATE OF ILLINOIS
DEPARTMENT OF TRANSPORTATION

EarthTech
A tyco International Ltd. Company

F.A.P. ROUTE NO.	SECTION	COUNTY	TOTAL SHEETS	SHEET NO.
786	109 BR	La Salle	351	198
FED. ROAD DIST. NO. 7	ILLINOIS	FED. AID PROJECT-		

SHEET NO.
SHEETS

Contract # 66607

Illinois Department of Transportation
Division of Highways
District #3, Ottawa

SOIL BORING LOG

Page 1 of 1

Date 3/15/05

ROUTE DuPont Road DESCRIPTION West End of Retaining Wall LOGGED BY DM/LM

SECTION Seneca River Bridge Retaining wall LOCATION SW 1/4, SEC. 25, TWP. 33N, RNG. 5E, 3rd PM

COUNTY LaSalle DRILLING METHOD Hollow Stem Auger HAMMER TYPE Automatic

STRUCT. NO.
Station

BORING NO. 1
Station 21+33
Offset 52.00ft Lt
Ground Surface Elev. 494.77 ft

Surface Water Elev. ft
Stream Bed Elev. ft

Groundwater Elev.:
First Encounter ft
Upon Completion ft
After Hrs. ft

Description	Elev.	DEPTH (ft)	BLOWS (/6")	UCS Qu (tsf)	MOIST (%)
Augered Brown Sandy Clay Loam Fill					
	492.27				
Very Stiff Dark Brown Sandy Clay Loam/ Silty Clay Loam Fill			3		
			4	3.3	13.0
			3	P	
		-5			
			3		
			4	3.8	19.5
			6	B	
	487.27				
Loose Brown Medium Sand/ Medium Gravel			3		
			4		12.1
Sand Cave in at 8' After Auger Removal			3		
	484.77	-10			
Loose Brown Medium/Coarse Sand with minor Fine/ Medium Gravel			3		
			4		20.1
			5		
			2		
			4		17.5
			5		
		-15			
	479.27		11		
Medium Brown Fine Sand					
Washed out at 17.5'			15		21.6
			15		
			2		
			4		22.4
			9		
	475.27	-20			

Description	Elev.	DEPTH (ft)	BLOWS (/6")	UCS Qu (tsf)	MOIST (%)
Dense Brown Fine Sand			12		
			23		17.6
washed out at 20' *(continued)*			27		
	473.27				
End of Boring					
		-25			
		-30			
		-35			
		-40			
		-45			

The Unconfined Compressive Strength (UCS) Failure Mode is indicated by (B-Bulge, S-Shear, P-Penetrometer)
The SPT (N value) is the sum of the last two blow values in each sampling zone (AASHTO T206)

BBS, from 137 (Rev. 8-99)

Illinois Department of Transportation
Division of Highways
District #3, Ottawa

SOIL BORING LOG

Page 1 of 1

Date 3/16/05

ROUTE DuPont Road DESCRIPTION LOGGED BY DM/LM

SECTION Seneca River Bridge Retaining wall LOCATION SW 1/4, SEC. 25, TWP. 33N, RNG. 5E, 3rd PM

COUNTY LaSalle DRILLING METHOD Hollow Stem Auger HAMMER TYPE Automatic

STRUCT. NO.
Station

BORING NO. 2
Station 22+13
Offset 25.00ft Lt
Ground Surface Elev. 491.42 ft

Surface Water Elev. ft
Stream Bed Elev. ft

Groundwater Elev.:
First Encounter ft
Upon Completion ft
After Hrs. ft

Description	Elev.	DEPTH (ft)	BLOWS (/6")	UCS Qu (tsf)	MOIST (%)
Augered Brown Sandy Clay Loam Fill					
	489.92				
Stiff Brown Sandy Clay Loam/ Sandy Loam Fill			2		
			3	2.0	15.4
	488.42		3	P	
Very Loose Brown Medium to Coarse Sand Fairly well Graded					
			1		
Sand Cave in at 5' after augers removed		-5	1		20.3
			2		
	485.42				
Very Loose Brown Medium to Coarse Sand with minor Fine to Medium Gravel			2		
			2		20.7
Sample washed from 9' to12'			2		
			1		
		-10	1		22.0
			1		
	479.42		2		
Medium Brown Medium/ Coarse Sand with minor Fine/ Medium Gravel with layers of Fine/ Medium Sand At 14'-16'			4		19.6
			6		
Sample washed at 12'- 18.5'			4		
		-15	9		22.4
			14		
			5		
			11		20.0
			19		
	472.92				
			6		
		-20	9		18.1

Description	Elev.	DEPTH (ft)	BLOWS (/6")	UCS Qu (tsf)	MOIST (%)
Dense Brown Fine to Coarse Sand with minor Fine to Medium Gravel	470.92		25		
Sample Washed from 18.5' to 20.5' *(continued)*					
End of Boring					
		-25			
		-30			
		-35			
		-40			

The Unconfined Compressive Strength (UCS) Failure Mode is indicated by (B-Bulge, S-Shear, P-Penetrometer)
The SPT (N value) is the sum of the last two blow values in each sampling zone (AASHTO T206)

BBS, from 137 (Rev. 8-99)

DESIGNED -	
CHECKED -	
DRAWN - JHR	
CHECKED -	

200

EXAMINED
ENGINEER OF BRIDGE DESIGN

PASSED
ENGINEER OF BRIDGES AND STRUCTURES

SOIL BORING LOG # 1 & 2
FOR RETAINING WALL
LA SALLE COUNTY,
SECTION 109 BR

STATE OF ILLINOIS
DEPARTMENT OF TRANSPORTATION

EarthTech
A tyco International Ltd. Company

F.A.P. ROUTE NO.	SECTION	COUNTY	TOTAL SHEETS	SHEET NO.
786	109 BR	La Salle	351	199
FED. ROAD DIST. NO. 7		ILLINOIS	FED. AID PROJECT-	

SHEET NO.
SHEETS

Contract # 66607

Illinois Department of Transportation — SOIL BORING LOG

Division of Highways
District #3, Ottawa

Page 1 of 1

Date 3/16/05

ROUTE DuPont Road DESCRIPTION LOGGED BY DM/LM

SECTION Seneca River Bridge Retaining wall LOCATION SW 1/4, SEC. 25, TWP. 33N, RNG. 5E, 3rd PM

COUNTY LaSalle DRILLING METHOD Hollow Stem Auger HAMMER TYPE Automatic

STRUCT. NO.
Station

BORING NO. 3
Station 23+13
Offset 26.00ft Lt
Ground Surface Elev. 491.96 ft

Surface Water Elev. ft
Stream Bed Elev. ft

Groundwater Elev.:
First Encounter ft
Upon Completion ft
After Hrs. ft

Description	Elev.	DEPTH (ft)	BLOWS (/6")	UCS Qu (tsf)	MOIST (%)
Augered Brown Sandy Clay Loam Fill	489.96				
Stiff Brown Sacndy Clay Loam/ Sandy Loam Fill	488.46		2		
			2	1.5	9.9
			2	P	
Very Loose Brown Fine to Coarse sand with minor pieces of Brown Micaceous Sand Stone		-5	1		
Sand Cave in at 5.5' after augers removed			2		11.6
			2		
			1		
			1		26.5
			1		
Medium Brown Fine to Coarse Sand with minor pieces of Brown Micaceous Sand Stone	482.96	-10	4		
			5		20.7
Sample washed from 12'-19'			5		
			4		
			7		19.9
			13		
		-15	4		
			9		23.2
			15		
			3		
			8		18.7
			15		
	472.96	-20	7		

Description	Elev.	DEPTH (ft)	BLOWS (/6")	UCS Qu (tsf)	MOIST (%)
Very Dense Brown Fine To Coarse Sand.	470.96		21		18.8
			35		
Sampled washed from 19' to 21 *(continued)*					
End of Boring					
		-25			
		-30			
		-35			
		-40			

The Unconfined Compressive Strength (UCS) Failure Mode is indicated by (B-Bulge, S-Shear, P-Penetrometer)
The SPT (N value) is the sum of the last two blow values in each sampling zone (AASHTO T206)

BBS, from 137 (Rev. 8-99)

Illinois Department of Transportation — SOIL BORING LOG

Division of Highways
District #3, Ottawa

Page 1 of 1

Date 3/17/05

ROUTE DuPont Road DESCRIPTION East End of Retaining Wall LOGGED BY DM/LM

SECTION Seneca River Bridge Retaining wall LOCATION SW 1/4, SEC. 25, TWP. 33N, RNG. 5E, 3rd PM

COUNTY LaSalle DRILLING METHOD Hollow Stem Auger HAMMER TYPE Automatic

STRUCT. NO.
Station

BORING NO. 4
Station 24+19
Offset 6.00ft Lt
Ground Surface Elev. 495.53 ft

Surface Water Elev. ft
Stream Bed Elev. ft

Groundwater Elev.:
First Encounter ft
Upon Completion ft
After Hrs. ft

Description	Elev.	DEPTH (ft)	BLOWS (/6")	UCS Qu (tsf)	MOIST (%)
Augered Brown Fine/ Coarse Sand with Large Gravel pieces (Fill)	493.03				
Medium Brown Fine/ Coarse Sand with up to Large Gravel (minor) (Fill)			5		
			8		4.7
			9		
Very Loose Brown Fine To Coarse Sand with Minor Fine Coarse Gravel (Fill?)	491.03	-5			
			1		
			1		6.7
Sand Cave in at 8.5' after auger removal			2		
			1		
			1		7.5
			2		
Loose Brown Fine to Coarse Sand with Minor Fine Medium Gravel with free water at 10'	486.03	-10			
			1		
			3		23.0
			3		
Medium Brown Fine/ Coarse sand with minor Fine/ Medium Gravel	483.53				
			5		
Samples washed from 12.5' to 21.5'			6		20.9
			7		
		-15			
			7		
			8		16.9
			8		
			3		
			6		19.8
			13		
		-20			

Description	Elev.	DEPTH (ft)	BLOWS (/6")	UCS Qu (tsf)	MOIST (%)
			7		
			9		21.6
			15		
	474.03				
End of Boring					
		-25			
		-30			
		-35			
		-40			

The Unconfined Compressive Strength (UCS) Failure Mode is indicated by (B-Bulge, S-Shear, P-Penetrometer)
The SPT (N value) is the sum of the last two blow values in each sampling zone (AASHTO T206)

BBS, from 137 (Rev. 8-99)

DESIGNED -	
CHECKED -	
DRAWN - JHR	
CHECKED -	

200

EXAMINED
ENGINEER OF BRIDGE DESIGN

PASSED
ENGINEER OF BRIDGES AND STRUCTURES

SOIL BORING LOG # 3 & 4
FOR RETAINING WALL
ILLINOIS RIVER AT SENECA
LA SALLE COUNTY,
SECTION 109 BR

CONTRACT NO. 66607

EarthTech
A Tyco International Ltd. Company

F.A.P. RTE.	SECTION	COUNTY	TOTAL SHEETS	SHEET NO.
786	(109) BR	LASALLE	351	200
STA.		TO STA.		
FED. ROAD DIST. NO.	ILLINOIS	FED. AID PROJECT		

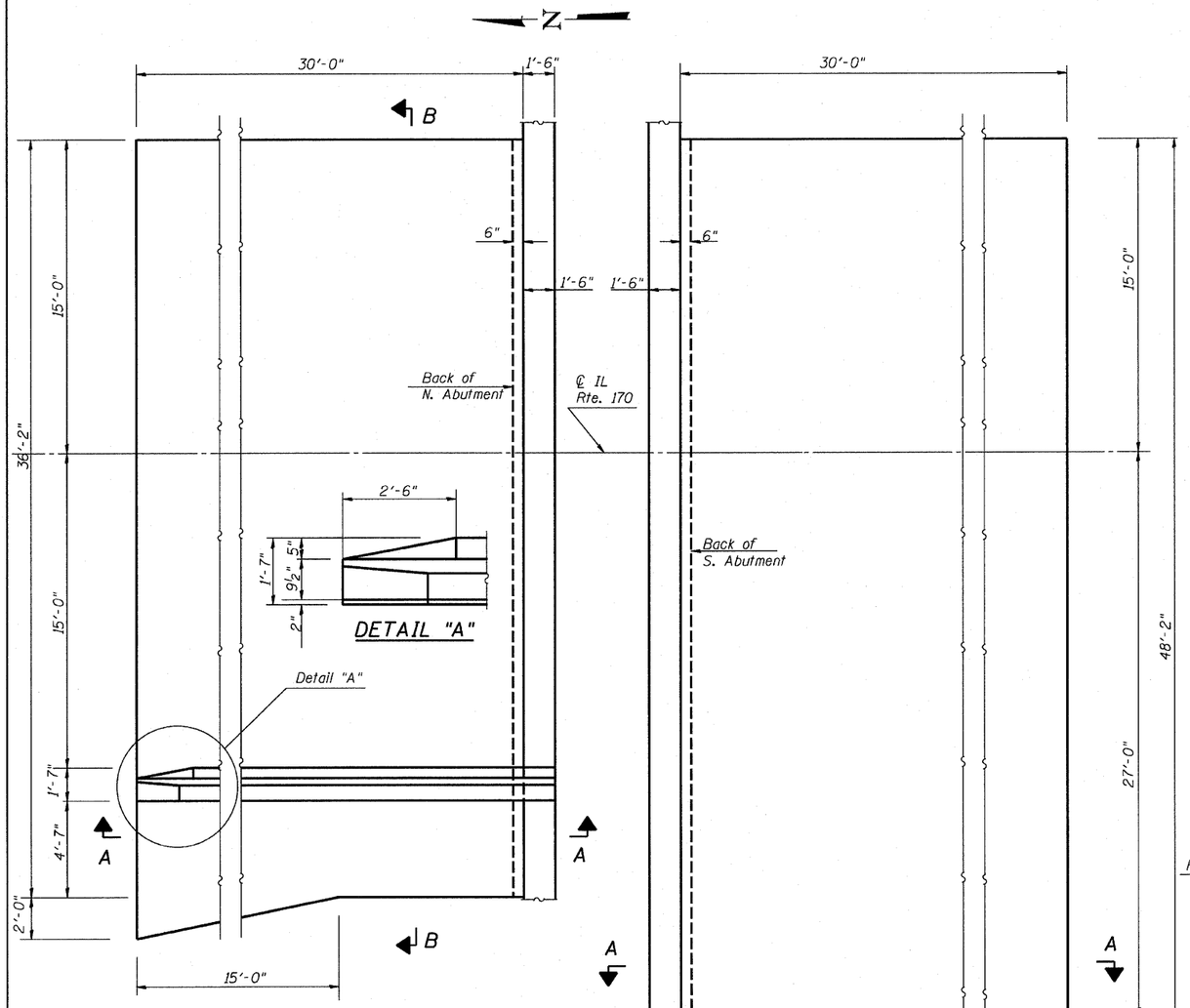

NORTH APPROACH PLAN

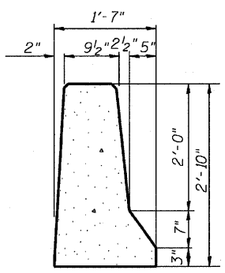

PARAPET SECTION AT APPROACH

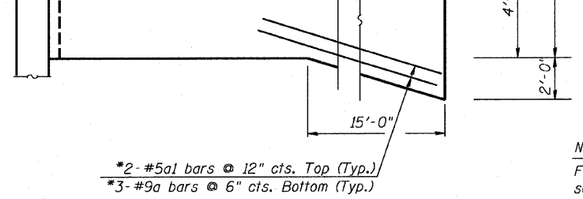

*2-#5a1 bars @ 12" cts. Top (Typ.)
*3-#9a bars @ 6" cts. Bottom (Typ.)

SOUTH APPROACH PLAN

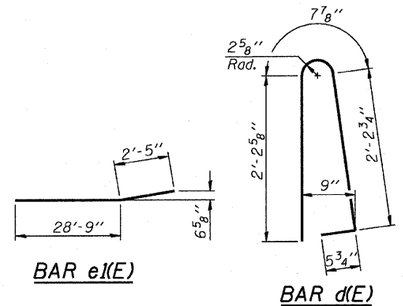

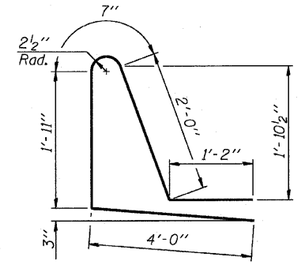

BILL OF MATERIAL

For Approach Parapets only

Bar	No.	Size	Length	Shape
d(E)	70	#5	5'-7"	
d_1(E)	70	#5	9'-8"	
e(E)	16	#4	3'-0"	
e1(E)	2	#8	2'-5"	
Reinforcement Bars, Epoxy Coated			Pound	1615
Concrete			Cu. Yds.	7

Reinforcement bars designated (E) shall be epoxy coated.

Bars indicated thus 1 x -#5 etc. indicates 1 line of bars with lengths per line.

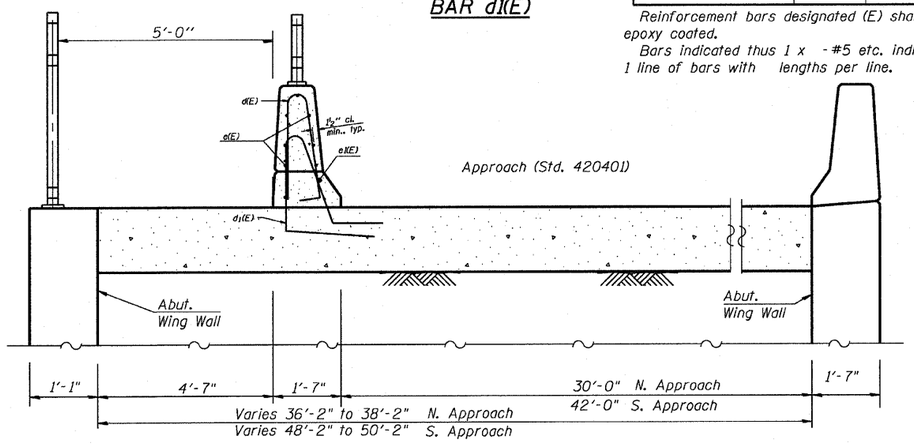

SECTION B-B

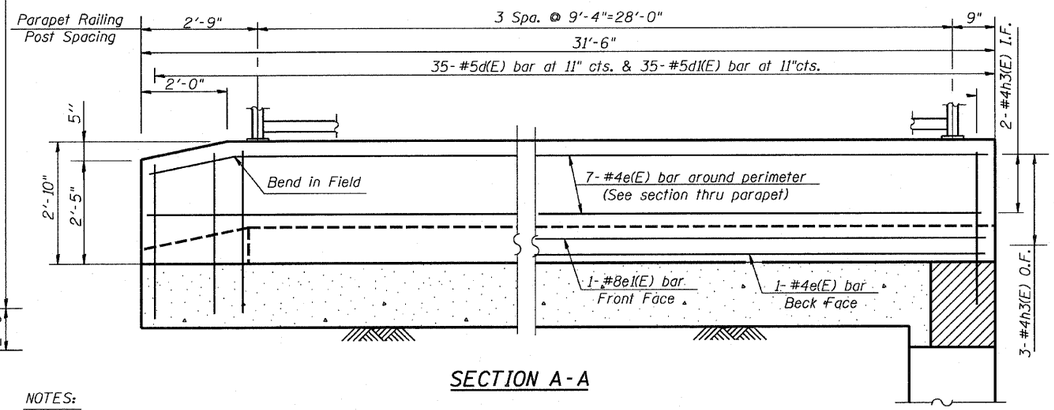

SECTION A-A

NOTES:

For Bridge Approach Details see Standard 420401-03

O.F. = Outside Face

I.F. = Inside Face

For Bicycle Railing and Parapet Railing Details See Sheet 37

*Cost of additional bars to be included in the cost Bridge Approach Pavement Special

REVISIONS	
NAME	DATE

ILLINOIS DEPARTMENT OF TRANSPORTATION

BRIDGE APPROACH PAVEMENT SPECIAL

SCALE:

DATE: JUNE 29, 2007

DRAWN BY JHR

CHECKED BY RJC

PLOT DATE = 10/4/2007
FILE NAME = $$FILE$$
PLOT SCALE = $$SCALE$$
USER NAME = $$USER$$

STATE OF ILLINOIS
DEPARTMENT OF TRANSPORTATION

ROUTE NO.	SECTION	COUNTY	TOTAL SHEETS	SHEET NO.
FAP 786 (IL 170)		LASALLE	351	200A
FED. ROAD DIST. NO. 7		ILLINOIS	FED. AID PROJECT-	

SHEET NO. 1
1 SHEETS

Contract Number: 66607

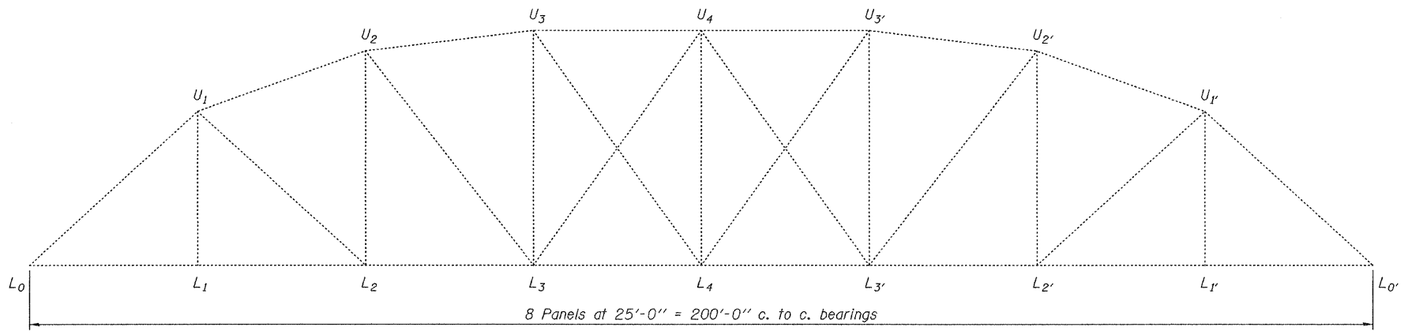

ELEVATION, SPAN 6

(Looking East)

GENERAL NOTES

Fasteners shall be high strength bolts. Bolts $^{7}/_{8}$"ϕ, open holes $^{15}/_{16}$"ϕ, unless otherwise noted.

Plan dimensions and details relative to existing plans are subject to routine variations. The Contractor shall field verify existing dimensions and details affecting new construction and make necessary approved adjustments prior to construction or ordering of materials. Such variations shall not be cause for additional compensation for a change in scope of the work, however, the Contractor will be paid for the quantity actually furnished based upon the unit price bid for the work.

The existing structural steel coating contains lead. The Contractor shall take appropriate precautions to deal with the presence of lead on this project.

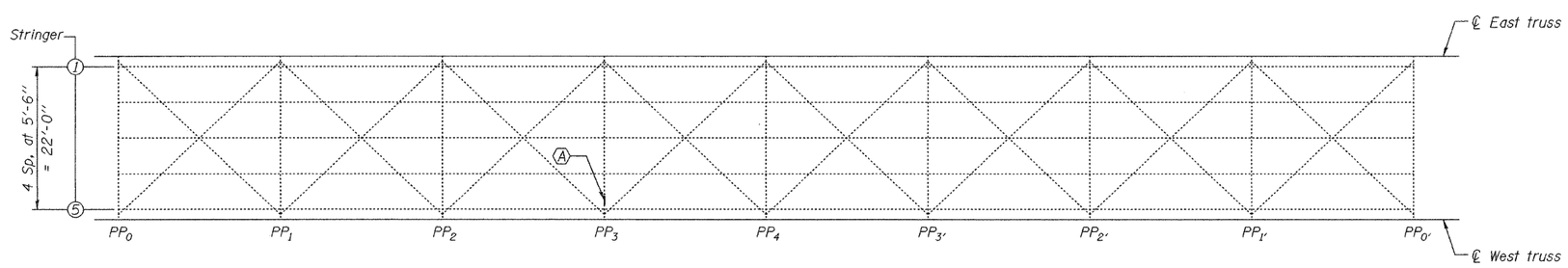

FRAMING PLAN, SPAN 6

(A) - Repair cracked weld at floorbeam cover plate

Note A:
The Contractor shall grind cracked weld (±15") parallel to the direction of the existing weld and not perpendicular to the weld. Ground surfaces shall be inspected for cracks using dye penetrant or magnetic particle testing prior to initiating bolting. Area should be thoroughly cleaned to remove any existing pack rust. Apply sealant compatible with structural steel before bolting cover plate to bottom flange. All labor, materials and traffic control required to complete the work as indicated on this sheet will be paid for at the contract unit price L. Sum for Structural Steel Repair.

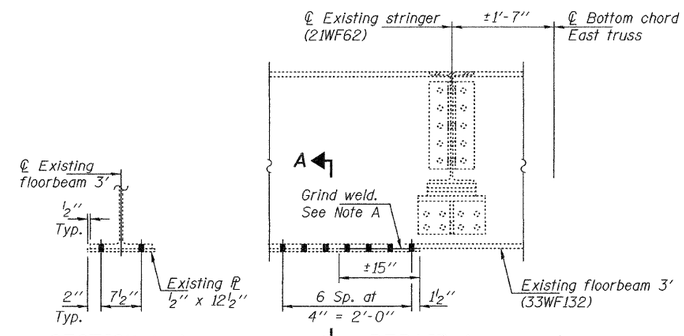

SECTION A-A

REPAIR A

(1 Required)

TOTAL BILL OF MATERIAL

ITEM	UNIT	QUANTITY
Structural Steel Repair	L. Sum	1

DESIGNED	Victor H. Velez
CHECKED	Prem Baliva
DRAWN	baliva
CHECKED	VHV DAB

NOVEMBER 6, 2007

EXAMINED — ENGINEER OF STRUCTURAL SERVICES

PASSED — ENGINEER OF BRIDGES AND STRUCTURES

STATE OF ILLINOIS
RALPH E. ANDERSON
081-004625
SPRINGFIELD
LICENSED STRUCTURAL ENGINEER

EXPIRES 11-30-2008

BRIDGE REPAIRS
FAP 786 (IL. 170)
LASALLE COUNTY
SN 050-0070

...\projects\ds60036\0500070.dgn 11/6/2007 2:46:19 PM