CONTRACT NO. 72659

F.A.I. RTE.	SECTION	COUNTY	TOTAL SHEETS	SHEET NO.
*	**	SANGAMON	248	18
STA.		TO STA.		
FED. ROAD DIST. NO.	ILLINOIS	FED. AID PROJECT		

* FAI55(I-55), FAI72(I-72), FAP666(I-55 BUS)
** D6 INTERSTATE RS,BR,M CAB 2008

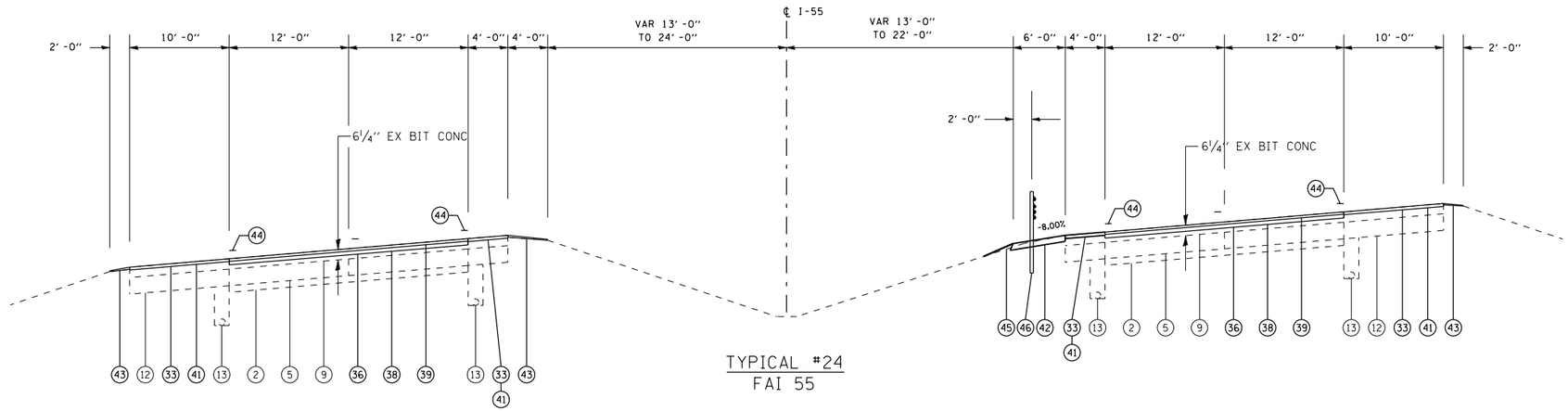

TYPICAL #24
FAI 55

STA 148+44.42 TO 160+69.89

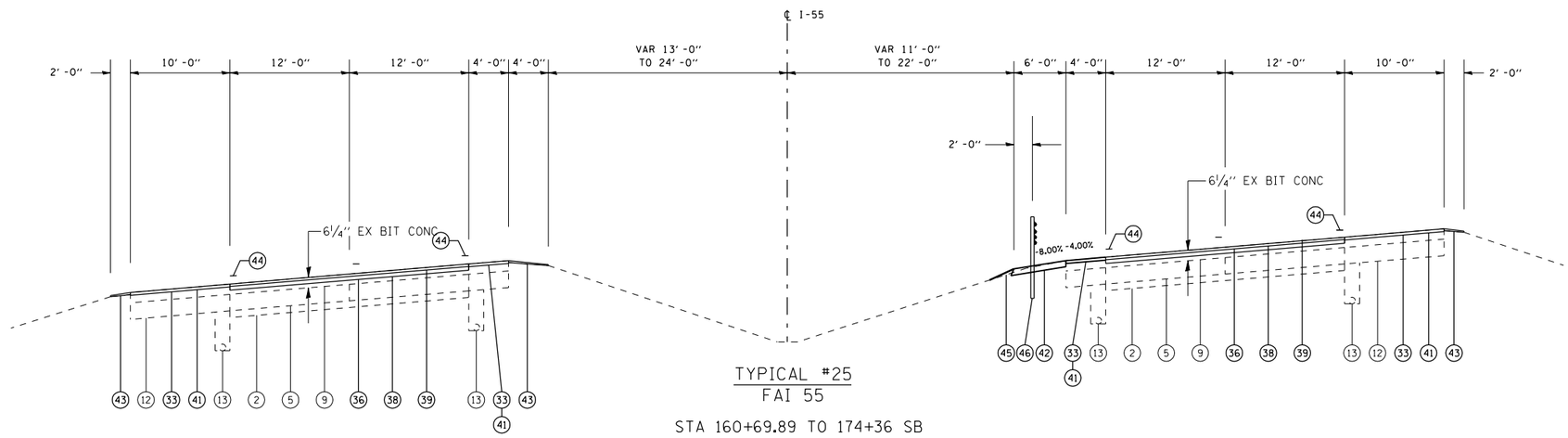

TYPICAL #25
FAI 55

STA 160+69.89 TO 174+36 SB
STA 160+69.89 TO 173+71 NB

LEGEND

1. EX STABILIZED SUB-BASE 4"
2. EX AGGREGATE SUB-BASE 4"
3. EX OPEN GRADED DRAINAGE LAYER 4"
4. EX SUB-BASE GRANULAR MATERIAL 12"
5. EX PCC PAVEMENT 10"
6. EX PCC BASE COURSE 10"
7. EX CRPCC PAVEMENT 11 3/4"
8. EX CRPCC PAVEMENT (7" WBL, 8" EBL)
9. EX BIT SURFACE COURSE (THICK VARIES)
10. EX AGGREGATE SHOULDERS
11. EX PCC SHOULDERS 11 3/4"
12. EX BITUMINOUS SHOULDERS (THICK VARIES)
13. EX PIPE UNDERDRAINS 4"
14. EX PIPE UNDERDRAINS 6"
15. EX TEMPORARY CONCRETE BARRIER WALL
16. EX BITUMINOUS CONCRETE PAVEMENT 18"
17. EX PCC BASE COURSE 9"
18. EX PCC PAVEMENT 8" STD REINFORCEMENT
19. EX PCC PAVEMENT 10" STD REINFORCEMENT
20. EX PCC PAVEMENT 9-7-9
31. PR HOT-MIX ASPHALT SURFACE REMOVAL, 3/4"
32. PR HOT-MIX ASPHALT SURFACE REMOVAL, 1 1/2"
33. PR HOT-MIX ASPHALT SURFACE REMOVAL, 2"
34. PR HOT-MIX ASPHALT SURFACE REMOVAL, 2 1/2"
35. PR HOT-MIX ASPHALT SURFACE REMOVAL, 3 1/4"
36. PR HOT-MIX ASPHALT SURFACE REMOVAL, 3 3/4"
37. PR HOT-MIX ASPHALT SURFACE REMOVAL, 5"
38. PR POLYMERIZED HOT-MIX ASPHALT BINDER COURSE, IL-19.0, N105 2 1/4"
39. PR POLYMERIZED HOT-MIX ASPHALT SURFACE COURSE, MIX "E", N105 1 1/2"
40. PR POLYMERIZED HOT-MIX ASPHALT SURFACE COURSE, MIX "E", N105 2"
41. PR HOT-MIX ASPHALT SURFACE COURSE, MIX "C", N30 2"
42. PR HOT-MIX ASPHALT SHOULDERS, 4"
43. PR AGGREGATE SHOULDERS, TYPE B
44. PR PAVEMENT MARKING
45. PR FURNISHED EXCAVATION
46. PR HIGH TENSION CABLE MEDIAN BARRIER

PAVED SHOULDER SLOPE

4.0% CROSS SLOPE IS DESIRABLE ON NORMAL CROWN SECTIONS

ON THE HIGH SIDE OF SUPERELEVATED CURVES, SLOPE THE SHOULDER SO THAT THE ALGEBRETIC DIFFERENCE BETWEEN THE PAVEMENT AND SHOULDERS ARE NOT GREATER THAN 8%

ON THE LOW SIDE OF SUPERELEVATED CURVES, SLOPE THE SHOULDER 4% UNLESS THE SUPER ELEVATED SECTION IS GREATER THAN 4% THEN MATCH SUPERELEVATED SLOPE

PAVEMENT SLOPE

1.5% CROSS SLOPE IS DESIRABLE ON CROWN SECTIONS

MATCH EXISTING SLOPE ON SUPERELEVATED SECTIONS UNLESS OTHERWISE NOTED

REVISIONS	
NAME	DATE

ILLINOIS DEPARTMENT OF TRANSPORTATION

TYPICAL SECTIONS

FAI55(I-55), FAI72(I-72), FAP666(I-55 BUS)
SECTION D6 INTERSTATE RS,BR,M CAB 2008
SANGAMON COUNTY

SCALE: DRAWN BY
DATE CHECKED BY

PLOT DATE = Oct-22-2007 08:19:04AM
FILE NAME = c:\Projects\d652882\typicals.dgn
PLOT SCALE = 100.0000 ' / IN.
USER NAME = Langfitt