1. SET POSTS AND EXCAVATE OR SLIT-TRENCH A 6-INCH DEEP TRENCH UPSLOPE ALONG THE LINE OF POSTS

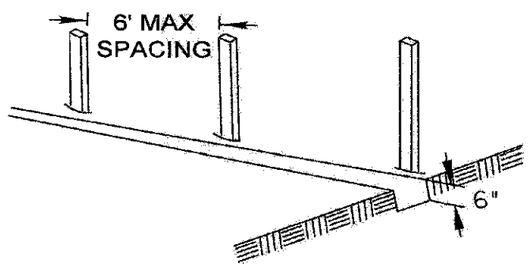

2. ATTACH GEOTEXTILE FILTER FABRIC TO EACH POST WITH A MINIMUM OF 3 (THREE) FASTENERS PER POST AND EXTEND FABRIC TO THE BOTTOM OF THE TRENCH

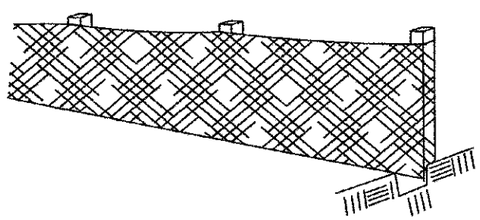

3. BACKFILL AND COMPACT THE EXCAVATED MATERIALS

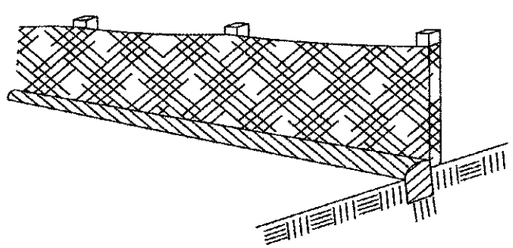

Requirements	Test Methods	Wire Backed Supported Silt Fence [a]	Unsupported Silt Fence	
			Geotextile Elongation >=50% [b]	Geotextile Elongation <50% [b]
Maximum Post Spacing		4 feet	4 feet	6 feet
Grab Strength	ASTM D 4632			
Machine direction		90 lbs	124 lbs	124 lbs
X-Machine direction		90 lbs	100 lbs	100lbs
Permittivity [c]	ASTM D 4491	0.05 sec^{-1}	0.05 sec^{-1}	0.05 sec^{-1}
Apparent Opening Size	ASTM D 4751	0.024in maximum average roll value		
Ultraviolet stability (retained strength)	ASTM D 4355	70% after 500 hours of exposure		

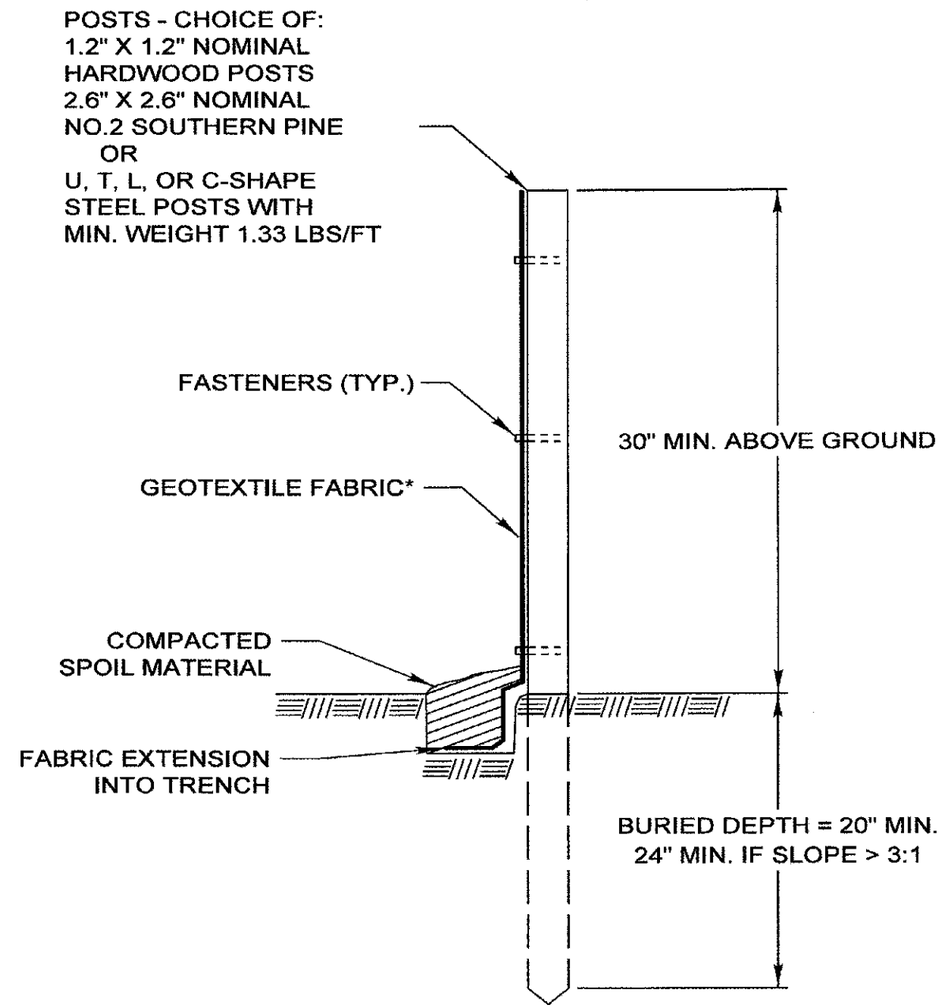

* NOTE: OPTIONAL WIRE SUPPORT
- MIN. 30" HEIGHT
- MIN. 14 GAUGE WIRE
- MIN. 6 HORIZ. WIRES
- MIN. 6" VERTICAL SPACING

SCALE 1" = 1'

REVISIONS	DATE
ORIG. by LCSMC	4/21/08
Update Text	7/15/11

LakeCounty
Division of Transportation

APPROVED BY: M. G. ZEMAITIS
DATE: JUNE 20, 2008

PERIMETER EROSION BARRIER INSTALLATION

LC2051

FILE NAME = L:\LAKECO\112240\Draw\CADD_Sheets\LCDOT_STANDARD_04.dgn

CMT ©Copyright CMT, Inc.
CRAWFORD, MURPHY & TILLY, INC.
CONSULTING ENGINEERS
License No. 184-000613

USER NAME = Jeff Sedig	DESIGNED - MNB	REVISED -
	DRAWN - MNB	REVISED -
PLOT SCALE = 40.0000 ' / in.	CHECKED - CMC	REVISED -
PLOT DATE = 11/12/2012	DATE - 10/22/2012	REVISED -

STATE OF ILLINOIS
DEPARTMENT OF TRANSPORTATION

LCDOT STANDARD DRAWINGS

SCALE: N.T.S. | SHEET NO. 5 OF 5 SHEETS | STA. N/A TO STA. N/A

F.A.U. RTE.	SECTION	COUNTY	TOTAL SHEETS	SHEET NO.
0192	06-00153-07-CH	LAKE	120	65
		CONTRACT NO. 63682		

FED. ROAD DIST. NO. | ILLINOIS | FED. AID PROJECT