NOTES:

1. THE GENERAL CONTRACTOR IS REQUIRED TO HIRE AN ENVIRONMENTAL FIRM WITH AT LEAST (5) FIVE DOCUMENTED LEAKING UNDERGROUND STORAGE TANK CLEANUPS OR THAT IS PRE-QUALIFIED IN HAZARDOUS WASTE BY THE DEPARTMENT TO REMEDIATE THE SOIL CONTAMINATION AND MONITOR FOR WORKER PROTECTION.

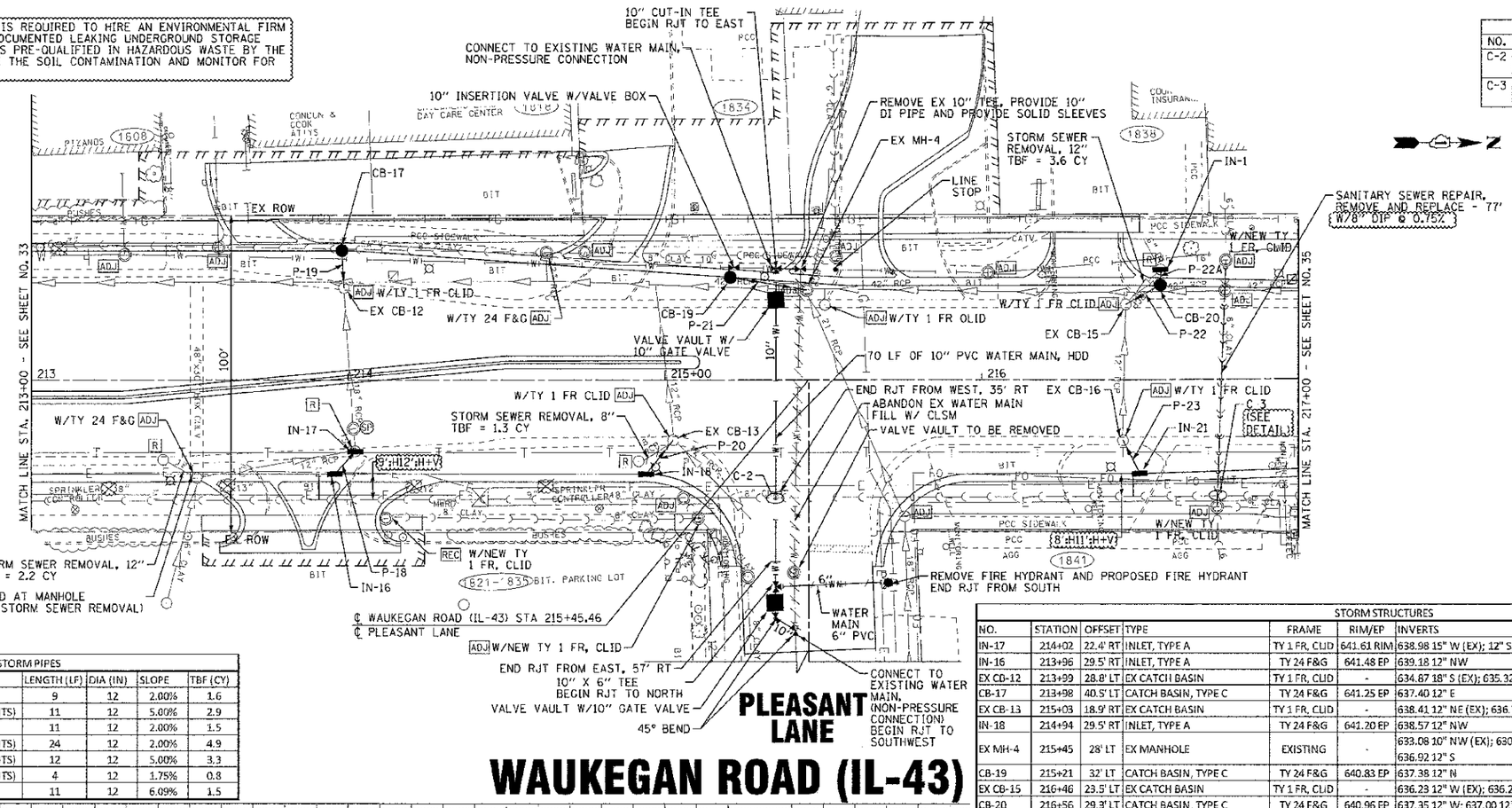

MWRD SEWER CROSSINGS			
NO.	STA/OFFSET	UTILITIES	INV ELV
C-2	215+35, 37' RT	EX 18" SAN	629.87
		PR 10" WM	634.70
C-3	216+75, 37' RT	EX 18" SAN	630.15
		PR 8" SAN	635.25

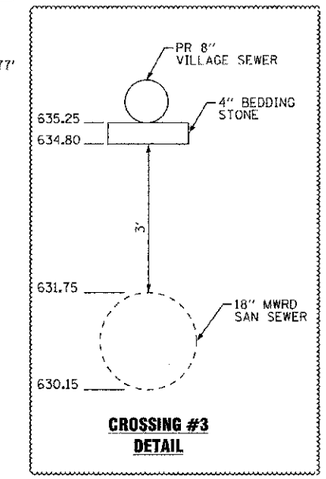

STORM PIPES					
NO.	TYPE	LENGTH (LF)	DIA (IN)	SLOPE	TBF (CY)
P-18	SS, CLA, TYPE 1	9	12	2.00%	1.6
P-19	SS (WATER MAIN REQUIREMENTS)	11	12	5.00%	2.9
P-20	SS, CLA, TYPE 1	11	12	2.00%	1.5
P-21	SS (WATER MAIN REQUIREMENTS)	24	12	2.00%	4.9
P-22	SS (WATER MAIN REQUIREMENTS)	12	12	5.00%	3.3
P-22A	SS (WATER MAIN REQUIREMENTS)	4	12	1.75%	0.8
P-23	SS, CLA, TYPE 1	11	12	6.09%	1.5

STORM STRUCTURES						
NO.	STATION	OFFSET	TYPE	FRAME	RIM/EP	INVERTS
IN-17	214+02	22.4' RT	INLET, TYPE A	TY 1 FR, CLID	641.61 RIM	638.98 15" W (EX); 12" S (EX-FIELD VERIFY); 639.00 12" SE
IN-16	213+96	29.5' RT	INLET, TYPE A	TY 24 F&G	641.48 EP	639.18 12" NW
EX CD-12	213+99	28.8' LT	EX CATCH BASIN	TY 1 FR, CLID	-	634.87 18" S (EX); 635.32 18" E (EX); 636.85 12" W
CB-17	213+98	40.5' LT	CATCH BASIN, TYPE C	TY 24 F&G	641.25 EP	637.40 12" E
EX CB-13	215+03	18.9' RT	EX CATCH BASIN	TY 1 FR, CLID	-	638.41 12" NE (EX); 636.76 12" W (EX); 638.35 12" SE
IN-18	214+94	29.5' RT	INLET, TYPE A	TY 24 F&G	641.20 EP	638.57 12" NW
EX MH-4	215+45	28' LT	EX MANHOLE	EXISTING	-	633.08 10" NW (EX); 630.18 21" NE (EX); 631.98 42" N (EX); 629.38 42" S (EX); 636.92 12" S
CB-19	215+21	32' LT	CATCH BASIN, TYPE C	TY 24 F&G	640.83 EP	637.38 12" N
EX CB-15	216+46	23.5' LT	EX CATCH BASIN	TY 1 FR, CLID	-	636.23 12" W (EX); 636.27 12" E (EX); 636.39 12" NW
CB-20	216+56	29.3' LT	CATCH BASIN, TYPE C	TY 24 F&G	640.96 EP	637.35 12" W; 637.00 12" SE
IN-1	216+57	35' LT	INLET, TYPE A	TY 8 GRATE	640.70 RIM	637.77 6" W (EX); 637.42 12" E
EX CB-16	216+45	19' RT	EX CATCH BASIN	TY 1 FR, CLID	-	636.88 12" W (EX); 638.33 12" NE
IN-21	216+50	29.4' RT	INLET, TYPE A	TY 24 F&G	640.96 EP	639.00 12" SW

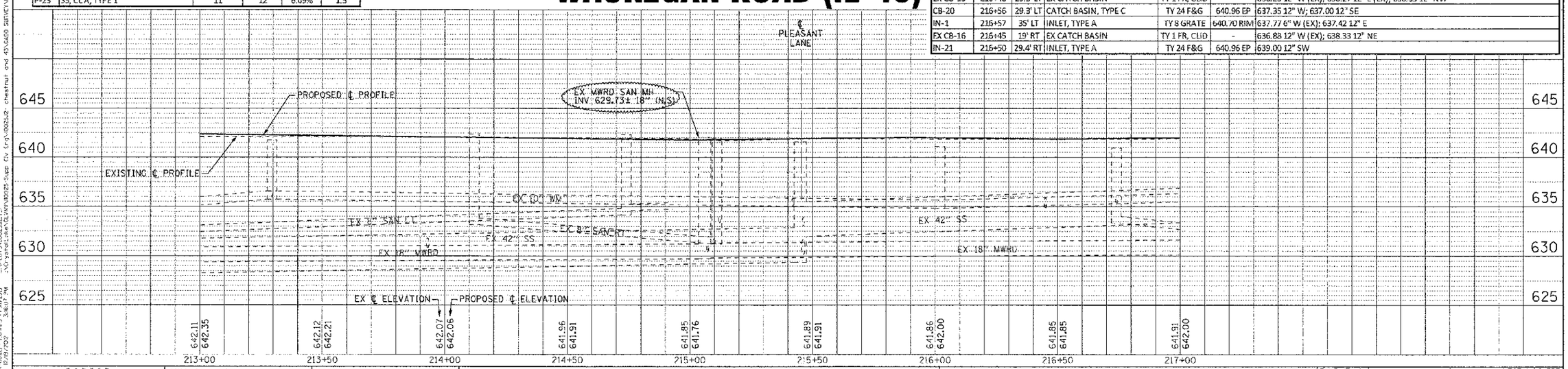

BAXTER & WOODMAN Consulting Engineers

DESIGNED - DSH	REVISED - 10-12-12 PER VILLAGE		
DRAWN - MAC	REVISED - 12-19-12 ADDENDUM 1		
CHECKED - TLH	REVISED		
DATE - 8/23/12	FILE - 110025-12-DU3.dgn		

STATE OF ILLINOIS
DEPARTMENT OF TRANSPORTATION

DRAINAGE AND UTILITY
WAUKEGAN ROAD (IL-43)

SCALE: H: 1"=20' V: 1"=5' STA. 213+00 TO STA. 217+00

F.A.P./F.A.U. RTE.	SECTION	COUNTY	TOTAL SHEETS	SHEET NO.
0348/1352	05-00160-00-CH	COOK	109	34
	C-91-070-06	CONTRACT NO. 63756		
FED. ROAD DIST. NO. 1 ILLINOIS		FED. AID PROJECT F 0346(35)		

COPYRIGHT © 2012 BY BAXTER & WOODMAN INC. STATE OF ILLINOIS - PROFESSIONAL DESIGN FIRM LICENSE NO. - 184-001272 DATE PRINTED 8/23/2012 TIME PRINTED 3:48:07 PM