BR. PLAN REG. NO.	STATE	FED. AID PROJ. NO.	SHEET NO.	TOTAL SHEETS
5	IOWA	BRO6(313)C	21	41

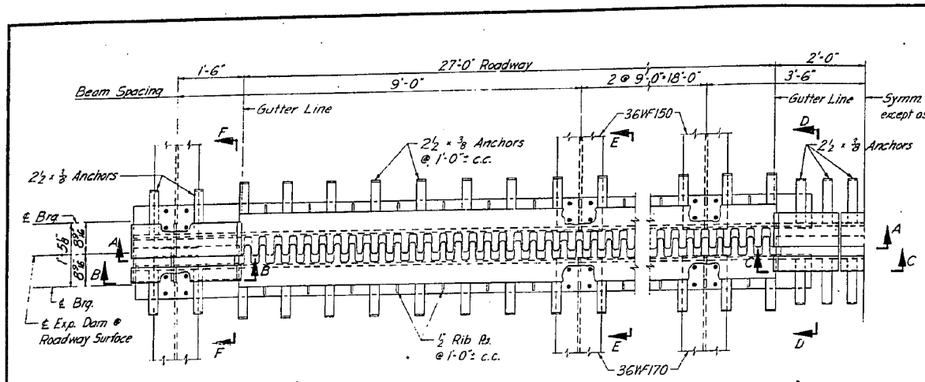

PLAN

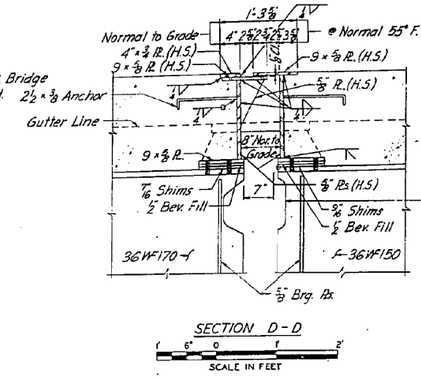

SECTION D-D

SCALE IN FEET

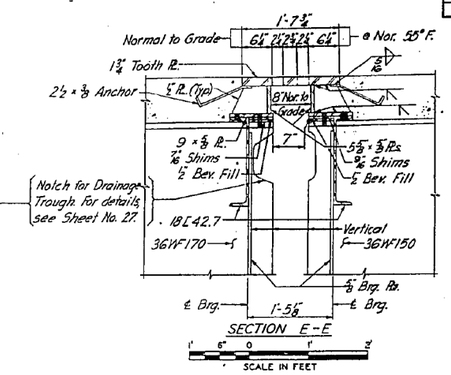

SECTION E-E

SCALE IN FEET

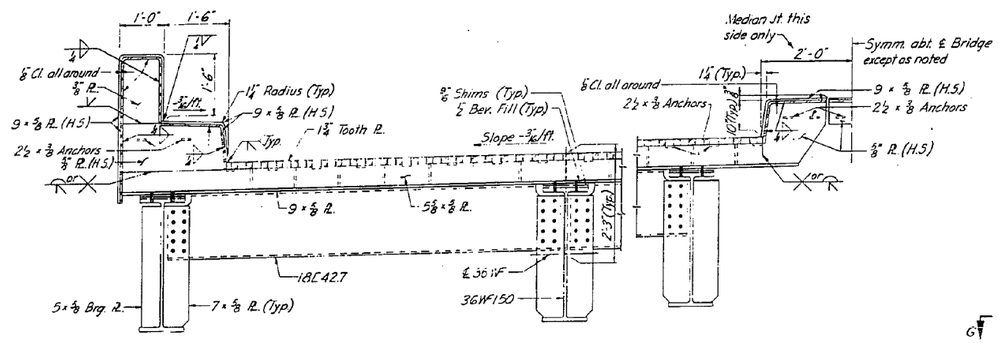

SECTION A-A

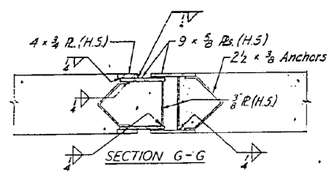

SECTION G-G

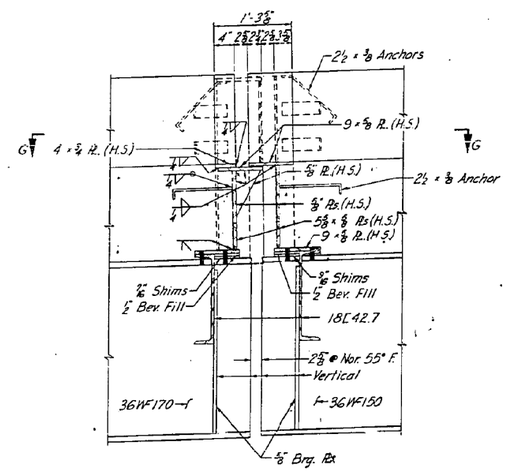

SECTION F-F

SCALE IN FEET

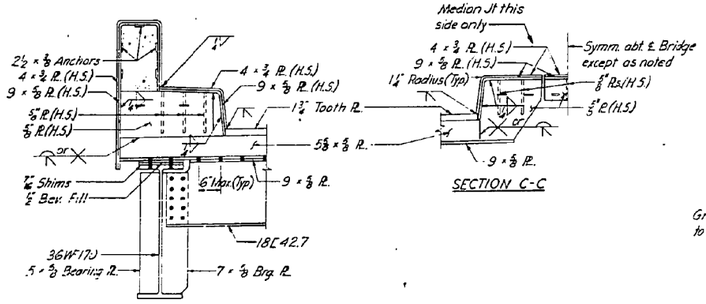

SECTION B-B

SECTION C-C

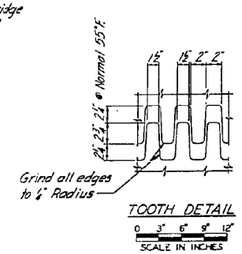

TOOTH DETAIL

SCALE IN INCHES

NOTES:

For General Notes and Design Criteria, see Sheet No. 3.

Expansion Dam shall be shop assembled to correct grade and slope and match marked.

Material noted as "H.S." shall be Low Alloy High Strength Steel, A.S.T.M. A441-63T. Material not otherwise noted shall conform to A.S.T.M. A36-62T.

IOWA STATE HIGHWAY COMMISSION
AND ILLINOIS DIVISION OF HIGHWAYS
INTERSTATE BRIDGE
OVER MISSISSIPPI RIVER AT LE CLAIRE, IOWA
CONTRACT NO. 2 SUPERSTRUCTURE
PIER 4 EXPANSION DAM

SCALE IN FEET UNLESS NOTED

MODJESKI & MASTERS, ENGINEERS

MAY 1964 SHEET NO. 21 OF 41

Project No. I-80-8(31)310 Design No. 163A Scott County File No. 21704 DR. BABCK BPS

0221 | 60 | 3384 | 6897 | 7445

DESIGNED VHV	EXAMINED Timothy A. Bradt	DATE -	OCTOBER 12, 2012
CHECKED DAB	ACTING ENGINEER OF STRUCTURAL SERVICES		
DRAWN baliva	PASSED A. Carl Kropp		
CHECKED VHV DAB	ACTING ENGINEER OF BRIDGES AND STRUCTURES		

STATE OF ILLINOIS
DEPARTMENT OF TRANSPORTATION

FOR INFORMATION ONLY
SN 081-0011
SHEET 18 OF 42 SHEETS

F.A. RTE.	SECTION	COUNTY	TOTAL SHEETS	SHEET NO.
80	D2 BRIDGE PAINTING 2012-2	ROCK ISLAND	46	22
		CONTRACT NO. 64H81		
		ILLINOIS FED. AID PROJECT		