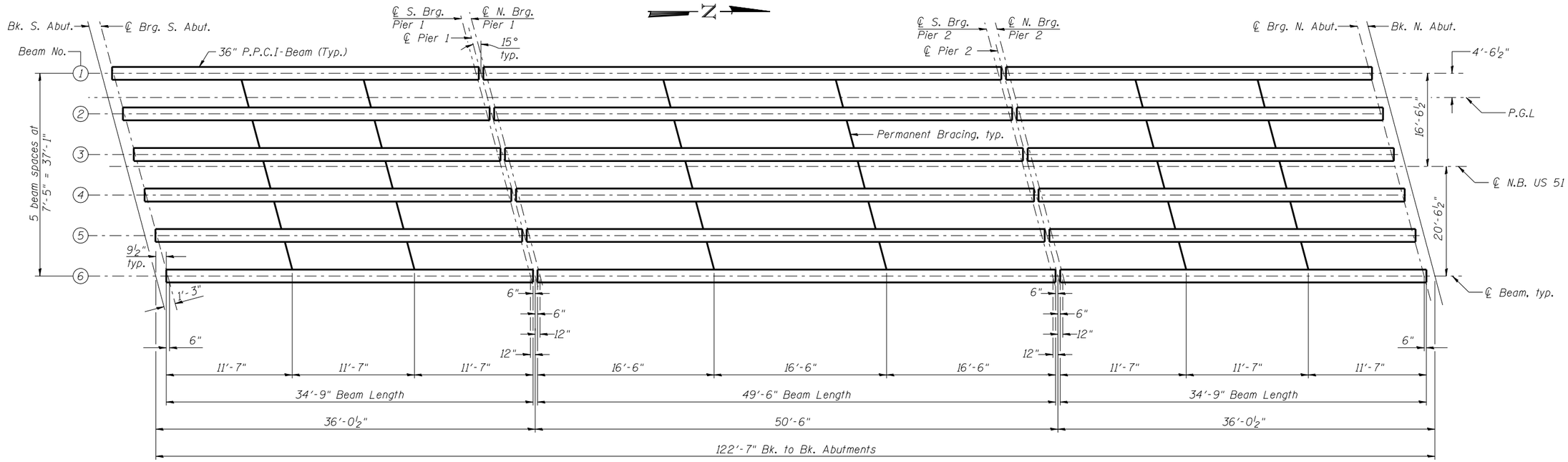

FRAMING PLAN

INTERIOR BEAM MOMENT TABLE				
		0.4 Sp. 1 0.6 Sp. 3	Pier 1 or 2	0.5 Sp. 2
I	(in^4)	48648	-	48648
I'	(in^4)	182288	-	182288
S_b	(in^3)	3165	-	3165
S_b'	(in^3)	6028	-	6028
S_t	(in^3)	2358	-	2358
S_t'	(in^3)	31640	-	31640
D	(k/')	1.13	-	1.13
M_D	('k)	170.1	-	359.2
s_D	(k/')	0.52	0.52	0.52
M_{sD}	('k)	35.9	100.6	65.4
M_L	('k)	198.8	187.8	251.6
M_I	('k)	59.6	56.0	70.4

INTERIOR BEAM REACTION TABLE					
			Abut.	Pier 1 Span 1 Pier 2 Span 3	Pier 1 Span 2 Pier 2 Span 2
	R_D	(k)	19.6	19.6	28.5
*	R_{sD}	(k)	6.2	12.5	12.5
*	R_L	(k)	38.4	25.0	25.0
*	R_I	(k)	11.5	6.0	6.0
	R_{Total}	(k)	75.7	63.1	72.0

* The total R_{sD}, R_L, and impact reactions are assumed to be distributed evenly to each bearing line at a pier regardless of the span ratios.

I: Non-composite moment of inertia of beam section ($in.^4$).
I': Composite moment of inertia of beam section ($in.^4$).
S_b: Non-composite section modulus for the bottom fiber of the prestressed beam ($in.^3$).
S_b': Composite section modulus for the bottom fiber of the prestressed beam ($in.^3$).
S_t: Non-composite section modulus for the top fiber of the prestressed beam ($in.^3$).
S_t': Composite section modulus for the top fiber of the prestressed beam ($in.^3$).
D: Un-factored non-composite dead load (kips/ft.).
M_D: Un-factored moment due to non-composite dead load conservatively taken at 0.5 of the span (kip-ft.).
s_D: Un-factored long-term composite (superimposed) dead load (kips/ft.).
M_{sD}: Un-factored moment due to long-term composite (superimposed) dead load (kip-ft.).
M_L: Un-factored live load moment on the composite section (kip-ft.).
M_I: Un-factored moment due to impact on the composite section (kip-ft.).

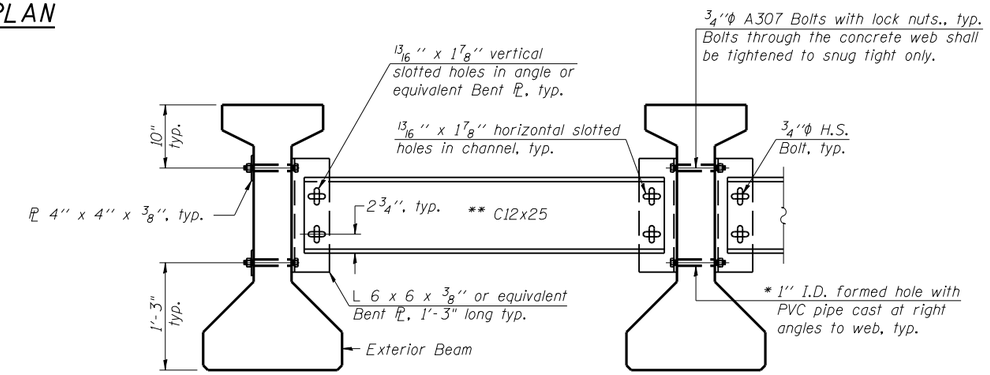

Notes:
All material for bracing shall be hot dip galvanized according to AASHTO M111 unless otherwise noted.
Two hardened washers are required for each set of oversized holes.
All holes shall be 15/16"Φ unless otherwise noted.
5/16" x 3" x 3" plate washers are required over all slotted holes.
All bolts shall be galvanized according to AASHTO M232.
Bracing shall be installed as beams are erected and tightened as soon as possible during erection.
Permanent bracing shall not be paid for separately, but shall be included in the cost of Furnishing and Erecting Precast Prestressed Concrete I-Beams.

* Fabricator shall locate to miss strands within permissible tolerances.

** Alternate C12x30 channels are permitted to facilitate material acquisition.

PERMANENT BRACING DETAILS