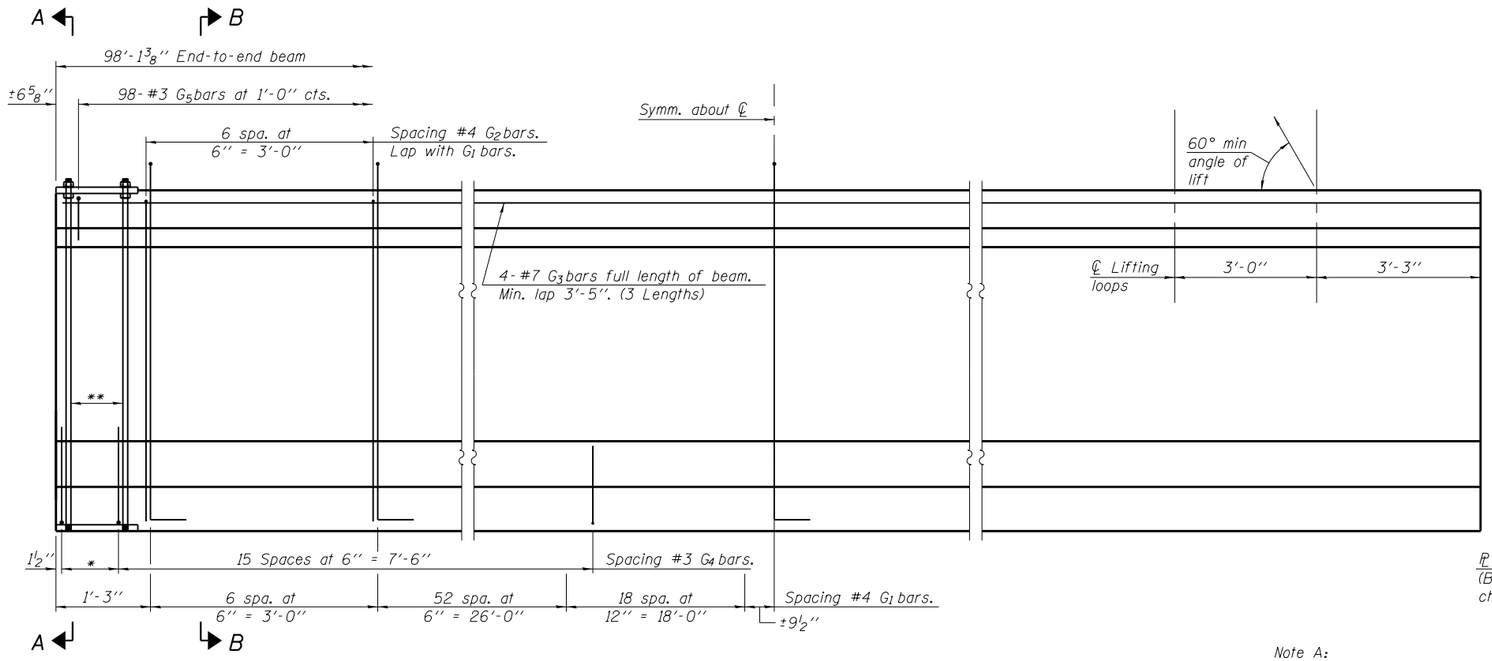


## ELEVATION OF BEAM
(Showing reinforcement & dimensions)

* 3 spaces at 3" = 9".
** 4-3/4" ϕ threaded dowel rods at 3" cts., Each Face.

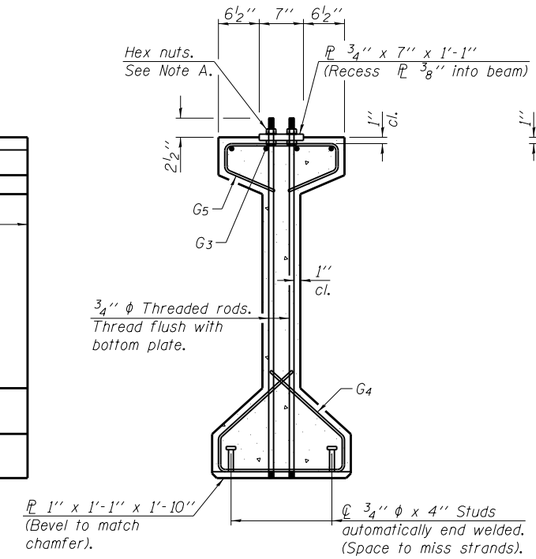


## SECTION A-A

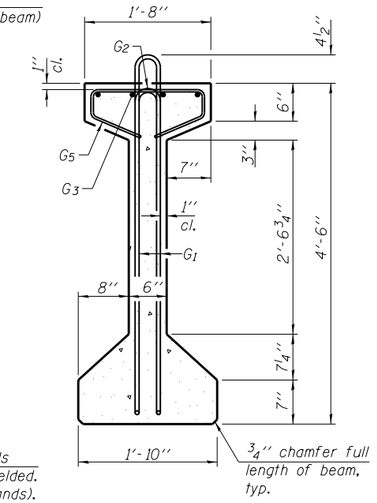


## SECTION B-B

Note A:
Hex nuts (top and bottom) with lock washers (top). Only tighten sufficiently to compress lock washers.

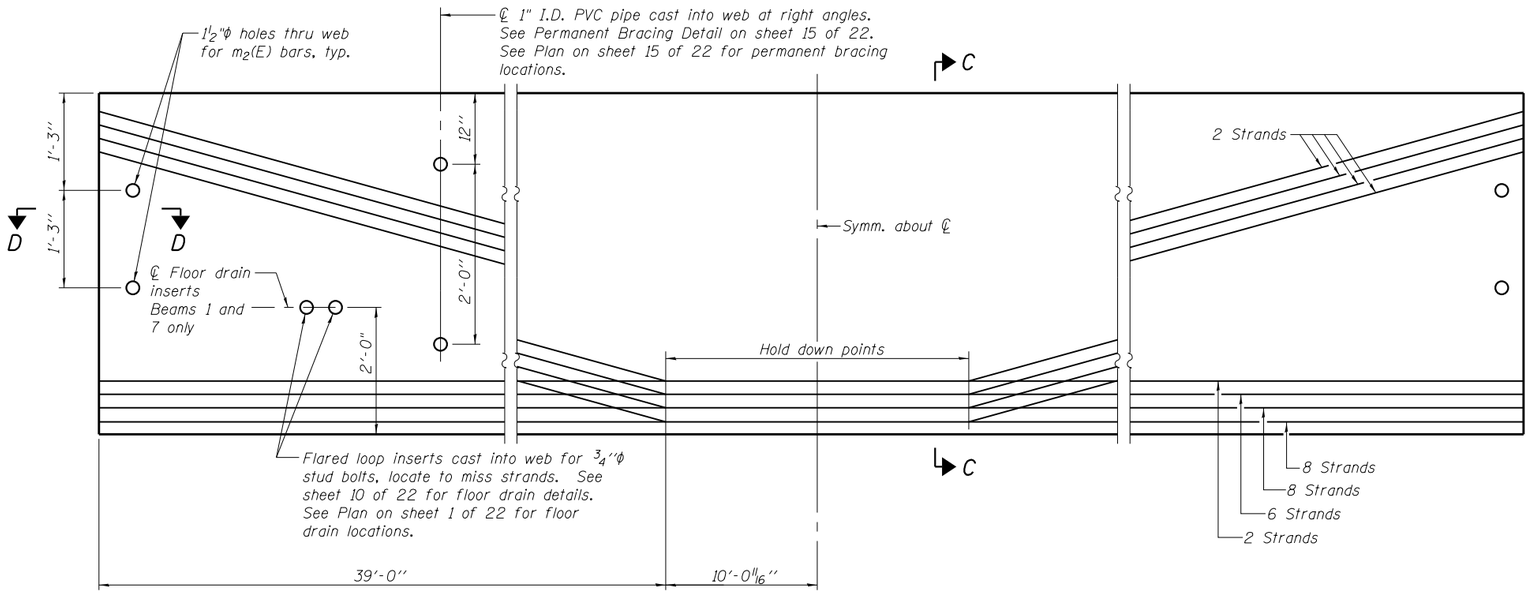


## ELEVATION OF BEAM
(Showing prestressing steel)

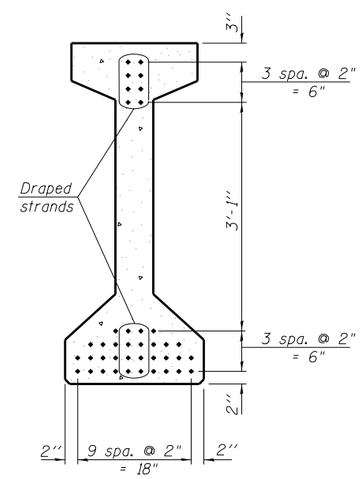


## SECTION C-C

## ***BAR LIST
## ONE BEAM ONLY

| Bar | No. | Size | Length | Shape |
|---|---|---|---|---|
| $G_1$ | 155 | #4 | 10'-5" | |
| $G_2$ | 14 | #4 | 8'-8" | |
| $G_3$ | 12 | #7 | 35'-0" | |
| $G_4$ | 38 | #3 | 4'-11" | |
| $G_5$ | 98 | #3 | 3'-5" | |

***For information only

Notes:
See sheet 17 of 22 for additional details and Bill of Material.
Required release strength, f'ci, shall be 6000 psi.

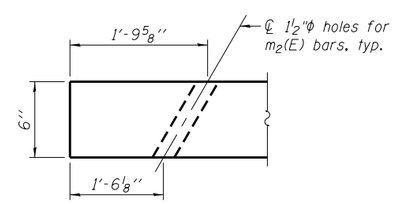


## SECTION D-D

PI-4-54 7-1-10

FILE NAME = c:\pw_work\pwidot\sparksgw\d0325252\D590515-72A19-016-beam.dgn
CB PROJECT NO 100895-1

| | | | | | |
|---|---|---|---|---|---|
| Coombe-Bloxdorf P.C. -CIVIL ENGINEERS- -STRUCTURAL ENGINEERS- -LAND SURVEYORS- Design Firm License No. 184-002703 | USER NAME = sparksgw | DESIGNED - CME | REVISED - | STATE OF ILLINOIS DEPARTMENT OF TRANSPORTATION | 54" PPC I-BEAM STRUCTURE NO. 059-0515 |
| | | CHECKED - MCB/RKM | REVISED - | | |
| | PLOT SCALE = 0:2.0000 ':' / in. | DRAWN - MML | REVISED - | | |
| | PLOT DATE = Oct-19-2012 02:14:55PM | CHECKED - MCB | REVISED - | | SHEET NO. 16 OF 22 SHEETS |

| F.A.P. RTE. | SECTION | COUNTY | TOTAL SHEETS | SHEET NO. |
|---|---|---|---|---|
| 325 | 116BR-1 | MACOUPIN | 67 | 52 |
| | | CONTRACT NO. 72A19 | | |
| | | ILLINOIS FED. AID PROJECT | | |