Notes:
Pour steps monolithically with cap.

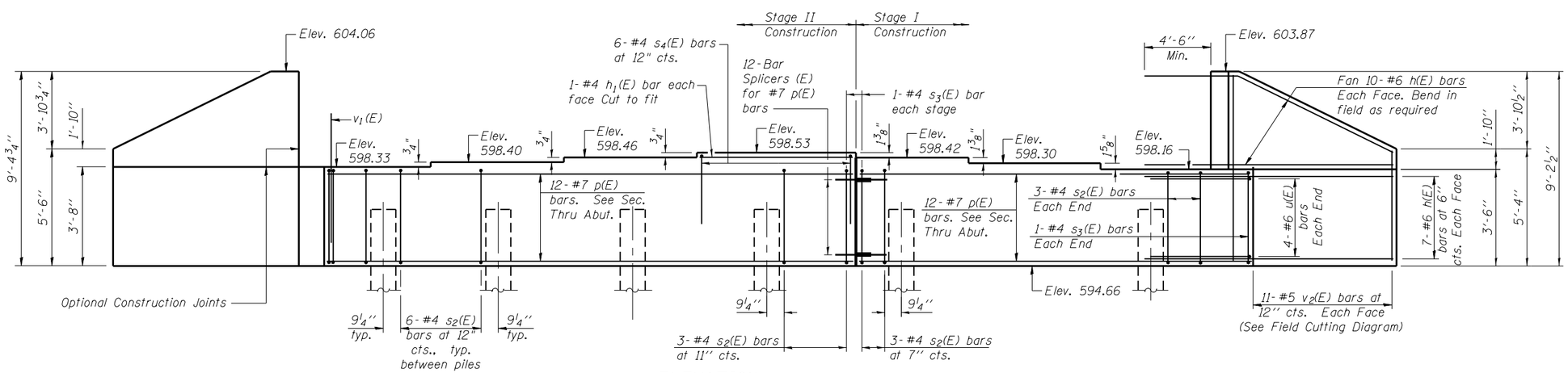

ELEVATION

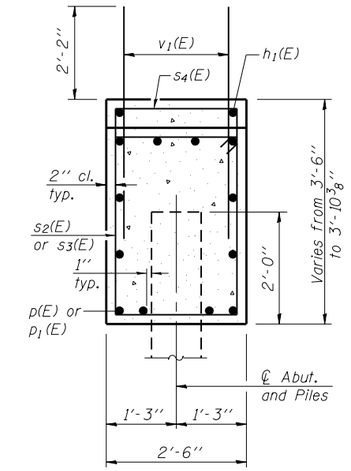

SEC. THRU ABUT.

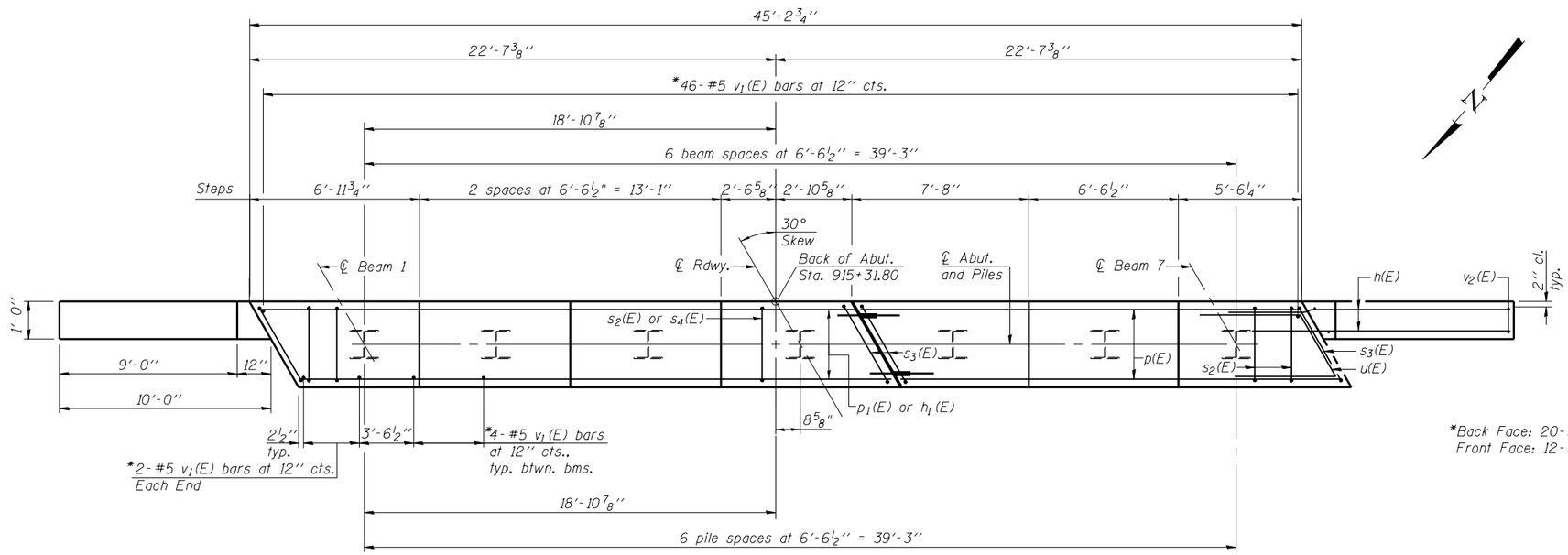

PLAN

*Back Face: 20-Stage I, 26-Stage II;
Front Face: 12-Stage I, 16-Stage II

BILL OF MATERIAL

	Bar	No.	Size	Length	Shape
	h(E)	68	#6	14'-4"	
	h_1(E)	2	#4	6'-6"	
	p(E)	12	#7	19'-4"	
	p_1(E)	12	#7	25'-2"	
	s_2(E)	42	#4	11'-5"	
	s_3(E)	4	#4	12'-1"	
	s_4(E)	6	#4	6'-2"	
	u(E)	8	#6	11'-3"	
*	v_1(E)	74	#5	4'-4"	
	v_2(E)	22	#5	13'-10"	
	Structure Excavation			Cu. Yd.	193
	Concrete Structures			Cu. Yd.	21.1
	Reinforcement Bars, Epoxy Coated			Pound	3400
	Furnishing Steel Piles HP 12x53			Foot	180
	Driving Piles			Foot	180
	Test Pile Steel HP 12x53			Each	1

For details of Bar Splicers, see sheet 21 of 22.
For details of piles, see sheet 20 of 22.

PILE DATA

Type: HP 12x53
Nominal Required Bearing: 419 k
Factored Resistance Available: 230 k
Est. Length: 30'
No. Production Piles: 6
No. Test Piles: 1

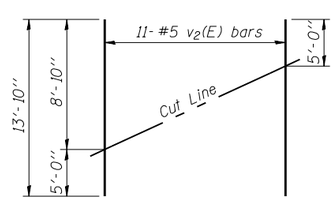

FIELD CUTTING DIAGRAM

Order v_2(E) full length. Cut as shown and use remainder of bars in opposite face.

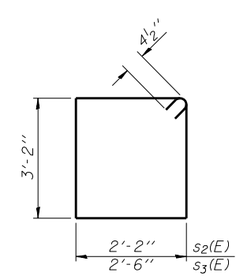

BARS s_2(E) & s_3(E)

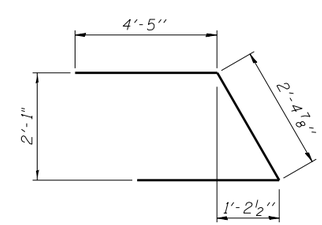

BAR u(E)

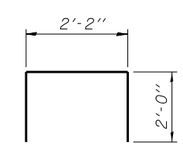

BAR s_4(E)

AI-L 7-1-10

FILE NAME = c:\pw_work\pwidot\sparksgw\d0325252\D590515-72A19-019-e-abut.dgn
CB PROJECT NO 10005-1

Coombe-Bloxdorf P.C.
-CIVIL ENGINEERS-
-STRUCTURAL ENGINEERS-
-LAND SURVEYORS-
Design Firm License No. 184-002703

USER NAME = sparksgw	DESIGNED - CME	REVISED -	
	CHECKED - MCB	REVISED -	
PLOT SCALE = 0:2.0000 ':' / in.	DRAWN - MML	REVISED -	
PLOT DATE = Oct-19-2012 02:14:59PM	CHECKED - MCB	REVISED -	

STATE OF ILLINOIS
DEPARTMENT OF TRANSPORTATION

EAST ABUTMENT
STRUCTURE NO. 059-0515
SHEET NO. 19 OF 22 SHEETS

F.A.P. RTE.	SECTION	COUNTY	TOTAL SHEETS	SHEET NO.
325	116BR-1	MACOUPIN	67	55

CONTRACT NO. 72A19
ILLINOIS FED. AID PROJECT