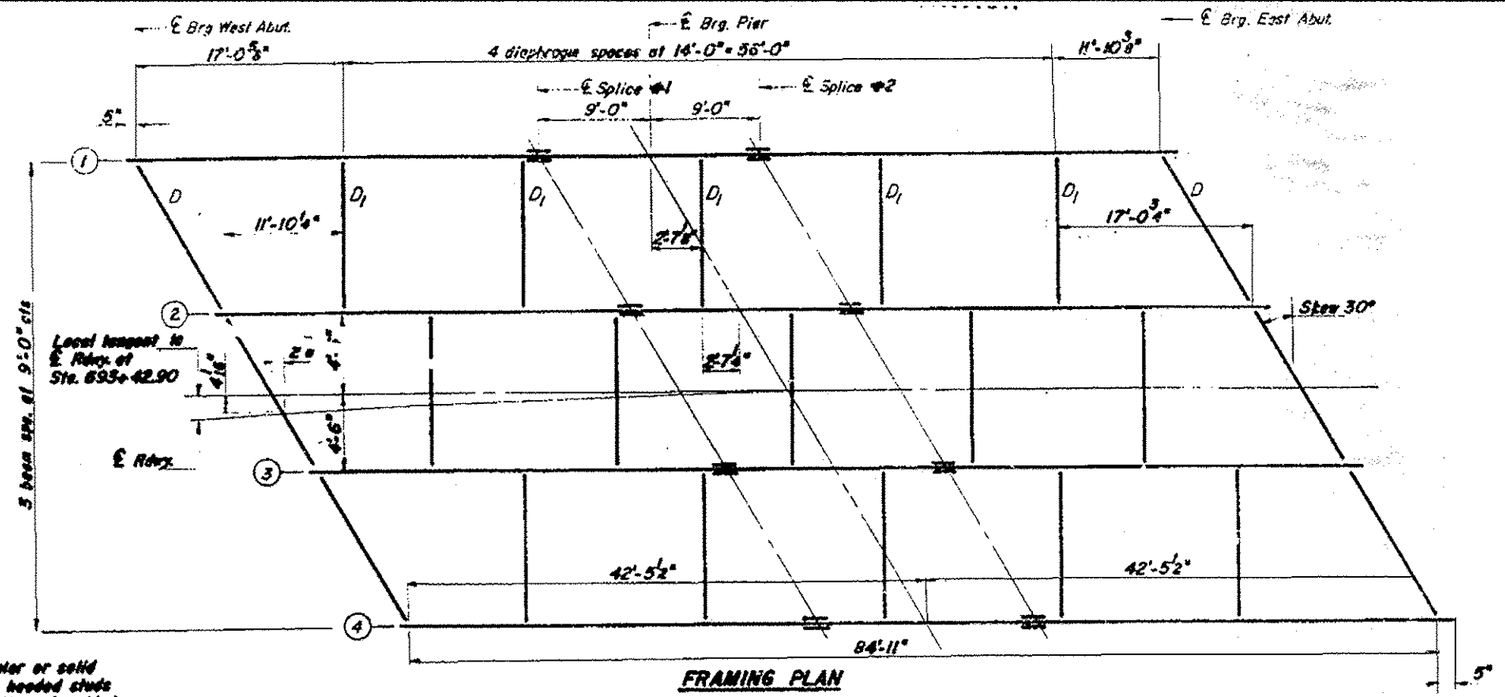

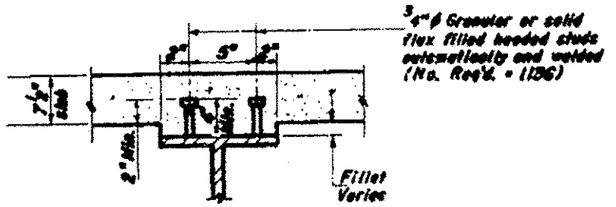

SECTION A-A

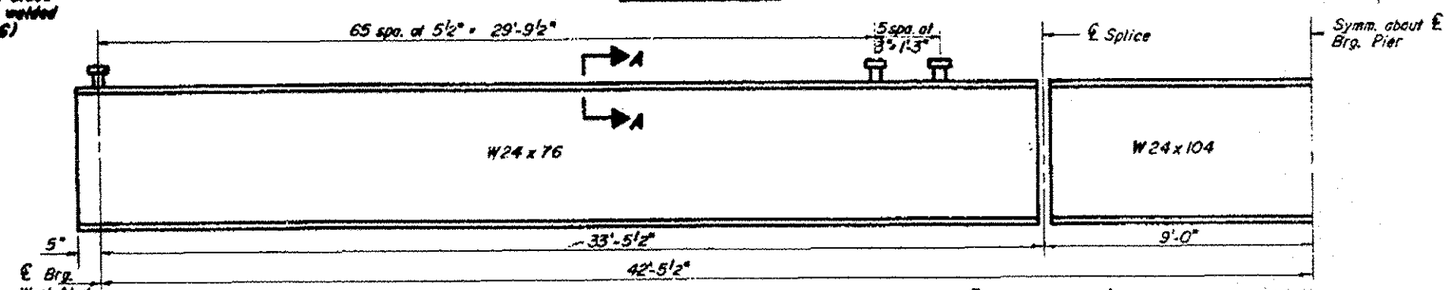

GIRDER ELEVATION

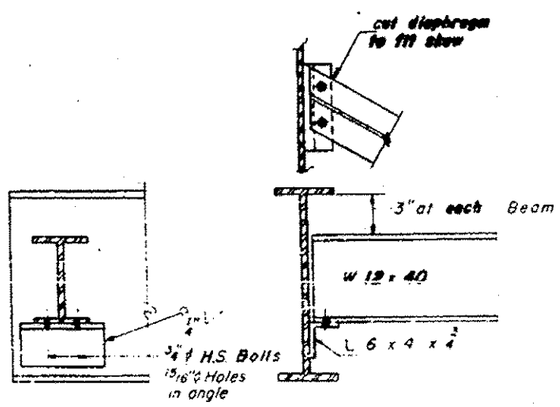

DIAPHRAGM D

6 Required

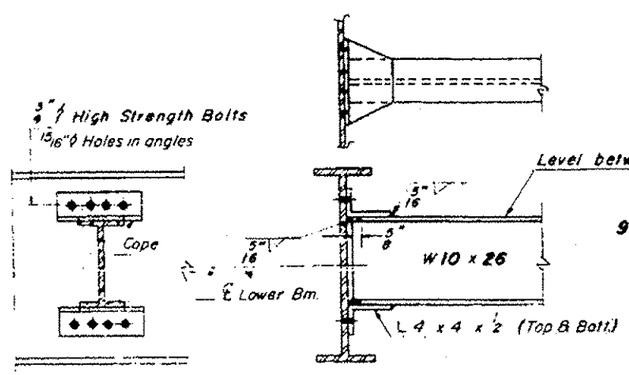

DIAPHRAGM D_1

15 Required

Note: Two hardened washers shall be required over each 15/16" ϕ holes in angles.

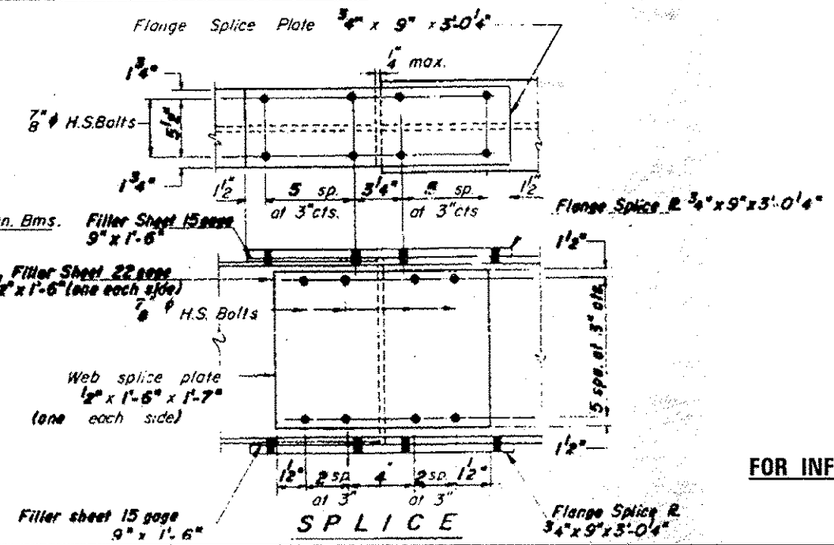

SPLICE

FOR INFORMATION ONLY

FILE NAME = c:\pw_work\pwidot\goutneyrk\d0319666\78341-sht-plan.dgn	USER NAME = goutneyrk	DESIGNED - ___	REVISED - ___
		DRAWN - ___	REVISED - ___
	PLOT SCALE = 40.0000 ' / in.	CHECKED - ___	REVISED - ___
$MODELNAME$	PLOT DATE = 10/11/2012	DATE - ___	REVISED - ___

STATE OF ILLINOIS
DEPARTMENT OF TRANSPORTATION

SN 076-0001
IL 34 OVER GIBBONS CREEK

SCALE: ___ SHEET ___ OF ___ SHEETS STA. ___ TO STA. ___

RTE.	SECTION	COUNTY	TOTAL SHEETS	SHEET NO.
VAR.	D9 BRIDGE PAINTING 2013-1	VARIOUS	33	29
		CONTRACT NO. 78341		
		ILLINOIS FED. AID PROJECT		