ILLINOIS PROJECT NO. VYS-4177
STATE BLOCK GRANT NO. 3-17-0060-B21
CONTRACT No. = IL 029

NOTE:
ALL REQUIRED TOPSOIL, SEEDING, AND MULCH METHOD SHALL BE INCIDENTAL TO PROPOSED BUILDING.

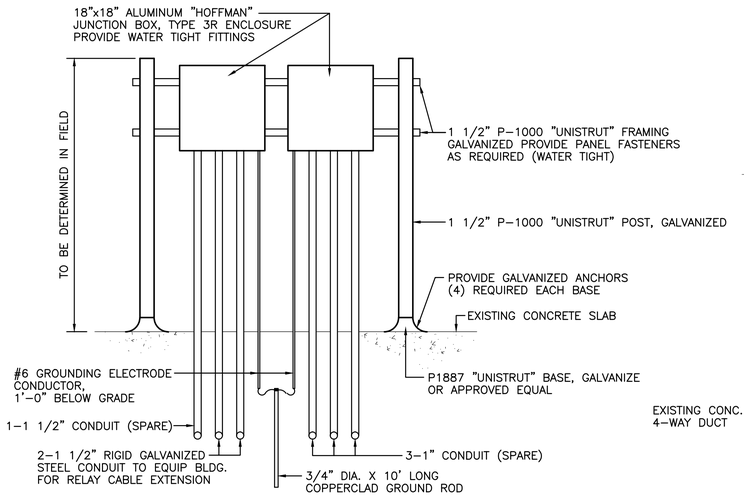

EQUIPMENT CABLE JUNCTION BOX
NOT TO SCALE

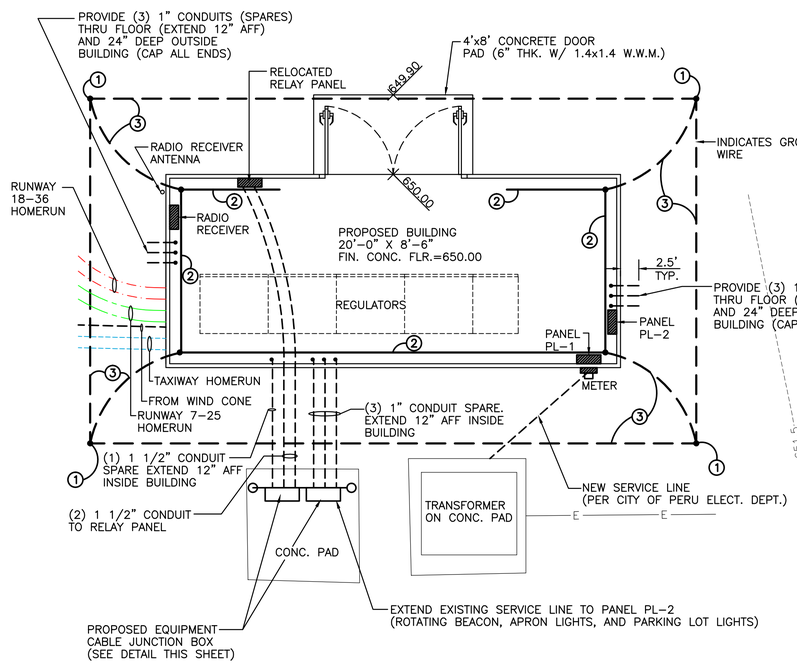

KEYED NOTES

1. 3/4" DIAMETER x 10' LONG COPPERCLAD GROUND ROD, MINIMUM BURY: 30". BOND GROUND WIRES TO GROUND RODS USING EXOTHERMIC WELD, CADWELD, OR EQUIVALENT. CLAMPED CONNECTIONS SHALL NOT BE ACCEPTABLE.
2. VAULT GROUND BUS, 1/4" x 3/4" COPPER BUS BAR, STAND-OFF MOUNTED 6" MINIMUM ABOVE FLOOR.
3. #2/0 BARE COPPER GROUND WIRE, MINIMUM BURY: 30"

N

PROPOSED SITE AND GROUNDING RING LAYOUT
NOT TO SCALE

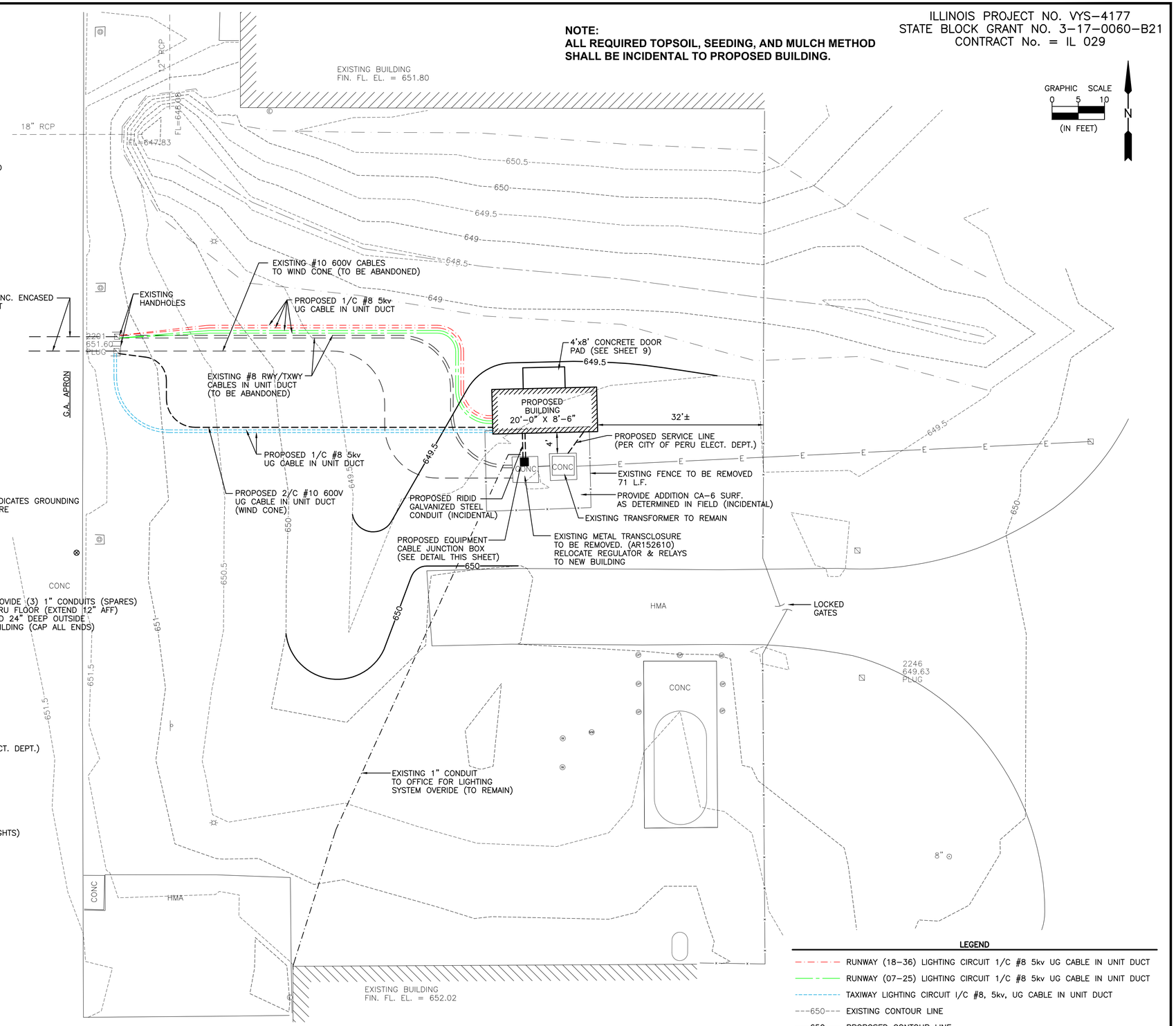

LEGEND

- RUNWAY (18-36) LIGHTING CIRCUIT 1/C #8 5kv UG CABLE IN UNIT DUCT
- RUNWAY (07-25) LIGHTING CIRCUIT 1/C #8 5kv UG CABLE IN UNIT DUCT
- TAXIWAY LIGHTING CIRCUIT 1/C #8, 5kv, UG CABLE IN UNIT DUCT
- 650 EXISTING CONTOUR LINE
- 650 PROPOSED CONTOUR LINE

DRAWN BY: ARR	REVISIONS			
CHECKED BY: RJC	LEVEL	BY	DATE	DESCRIPTION
DATE: NOVEMBER 2012				

CHAMLIN & ASSOCIATES

PERU MORRIS ILLINOIS

ILLINOIS VALLEY REGIONAL AIRPORT (VYS)
SEPARATE RUNWAY CIRCUITS AND CONSTRUCT VAULT
PERU, ILLINOIS

PROPOSED EQUIPMENT BUILDING SITE PLAN

CONSTRUCTION PLANS

CURRENT AS OF: 11/16/12		
SCALE: As Noted	SHEET 3	
FILE NO.: 1000.96 Y-	OF 10	

CHAMLIN & ASSOCIATES, INC. ©2012
Drawing Name: Q:\Users\VS\0002-36-VIRA-Electrical-Lighting-Equipment\CAD\FINAL PLANS\Final Plans (Revised)\003-SITE PLAN.dwg Last Modified: Nov 14, 2012 - 4:39pm Plotted on: Nov 16, 2012 - 8:00am by tjmh