ROUTE NO.	SECTION	COUNTY	TOTAL SHEETS	SHEET NO.
758	3BR-1	MOULTRIE	24	11
FED. ROAD DIST. NO.	ILLINOIS	FED. AID PROJECT-		

SHEET NO. 4
6 SHEETS

Contract #74147

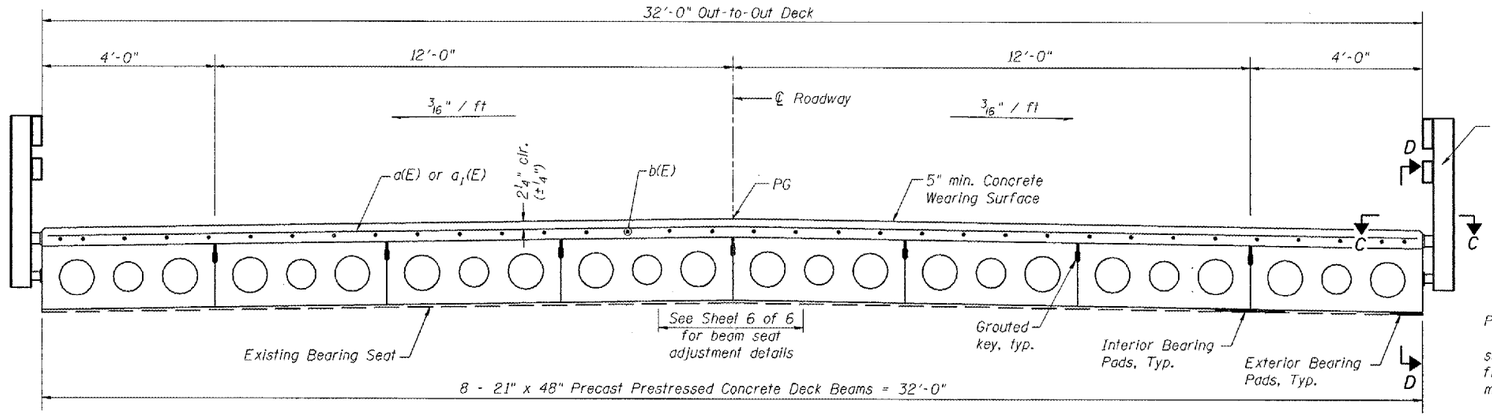

CROSS SECTION

NOTES

See Sheet 5 of 6 for details of Rail Anchorage into Precast Beams and Section D-D.

After beams have been erected, holes shall be drilled into substructure and dowel rods placed. Dowel holes shall be filled with non-shrink grout to top of beam and allowed to cure min. 24 hrs. prior to grouting the shear keys.

See sheet 5 of 6 for fabric bearing pad details.

Concrete wearing surface to be poured after grouting the shearkeys.

Dowel rods drilled in abutment and grout are included in the cost of Precast Prestressed Concrete Deck Beams (21" Depth).

Work this Sheet with Sheet 3 of 6.

Reinforcement bars designated (E) shall be epoxy coated.

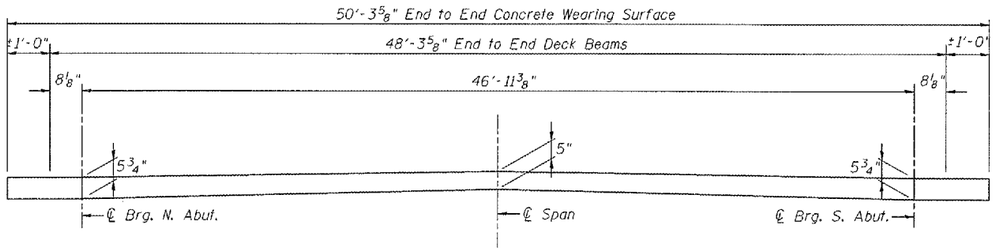

REINFORCED CONCRETE WEARING SURFACE PROFILE

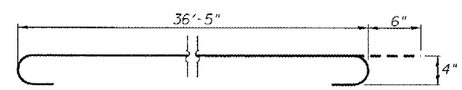

BAR a(E)

SUPERSTRUCTURE BILL OF MATERIAL

BAR	NO.	SIZE	LENGTH	SHAPE
a(E)	49	#4	37'-5"	
a1(E)	4	#4	36'-5"	
b(E)	66	#4	25'-10"	
Reinforcement Bars, Epoxy Coated			Pound	2460
Concrete Wearing Surface			Sq. Yd.	179
Bridge Deck Grooving			Sq. Yd.	167

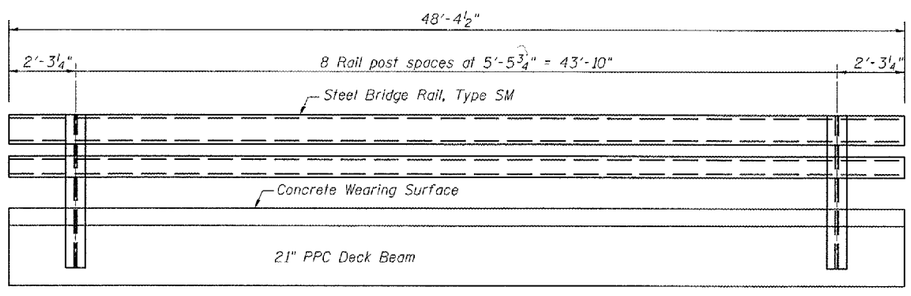

RAIL POST SPACING

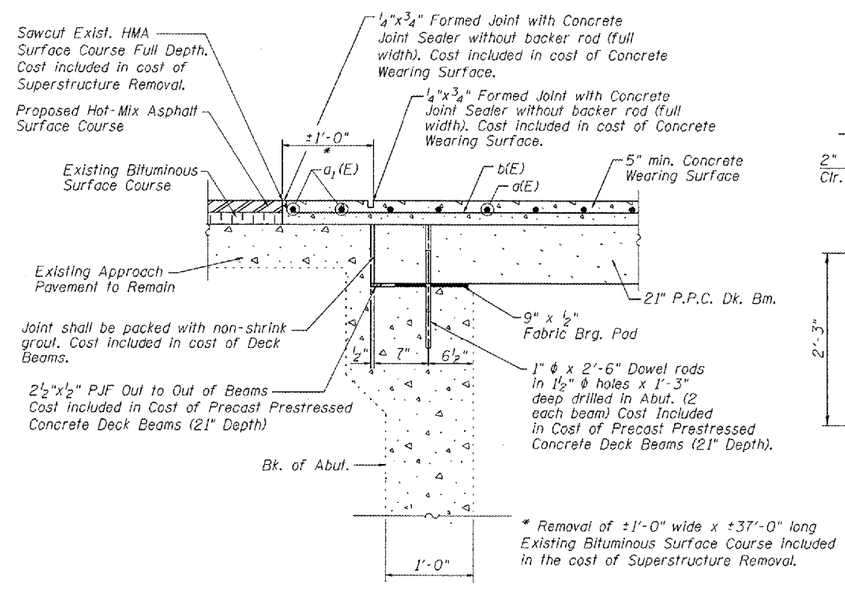

SECTION A-A
TYP. SECTION THRU ABUTMENT
(at Rt. Ls)

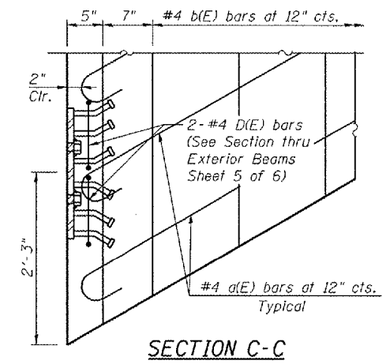

SECTION C-C

ILLINOIS DEPARTMENT OF TRANSPORTATION

SUPERSTRUCTURE DETAILS

IL ROUTE 32 OVER
JONATHAN BRANCH
F.A.P. ROUTE 758 SECTION 3BR-1
MOULTRIE COUNTY
STATION 68+26.50
STRUCTURE NO. 070-0033

DATE: MARCH 2006

DRAWN BY: MLO
CHECKED BY: PBB

BLANK, WESSELINK, COOK & ASSOCIATES ENGINEERS - CONSULTANTS DECATUR, ILLINOIS

...\Bridge\Super-Structure.dgn 11/29/2006 10:04:13 AM moakley