CONTRACT NO. 76454

F.A.P. RTE.	SECTION	COUNTY	TOTAL SHEETS	SHEET NO.
314	108BR-I	MADISON	123	10
STA.		TO STA.		
FED. ROAD DIST. NO.	ILLINOIS	FED. AID PROJECT		

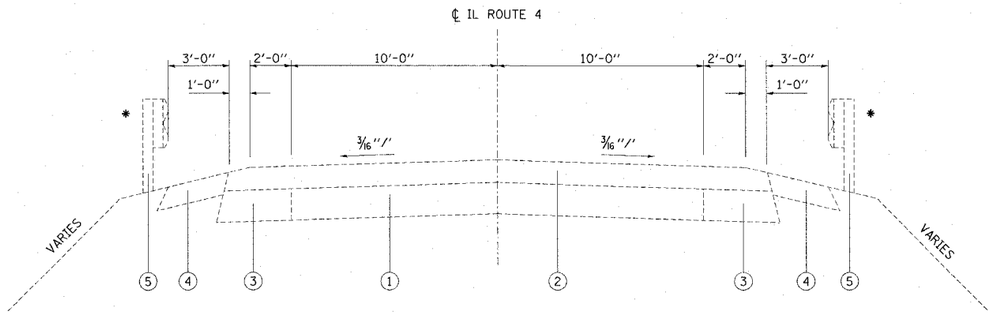

EXISTING TYPICAL SECTION

STA 258+80 TO STA 261+51
STA 265+51 TO STA 268+80

* STA 261+16 TO STA 261+51
STA 265+51 TO STA 265+98

LEGEND

1. EXISTING PCC PAVEMENT
2. EXISTING RESURFACING
3. EXISTING PCC BASE COURSE WIDENING - 9"
4. EXISTING AGGREGATE SHOULDER - 6"
5. EXISTING GUARDRAIL
6. PROPOSED BITUMINOUS BINDER COURSE - VARIES
7. PROPOSED BITUMINOUS SURFACE COURSE - 1 1/2 "
8. PROPOSED BITUMINOUS SHOULDER - 8"
9. PROPOSED AGGREGATE SHOULDER - 6"
10. PROPOSED GUARDRAIL
11. PROPOSED BITUMINOUS BASE COURSE WIDENING - 8"

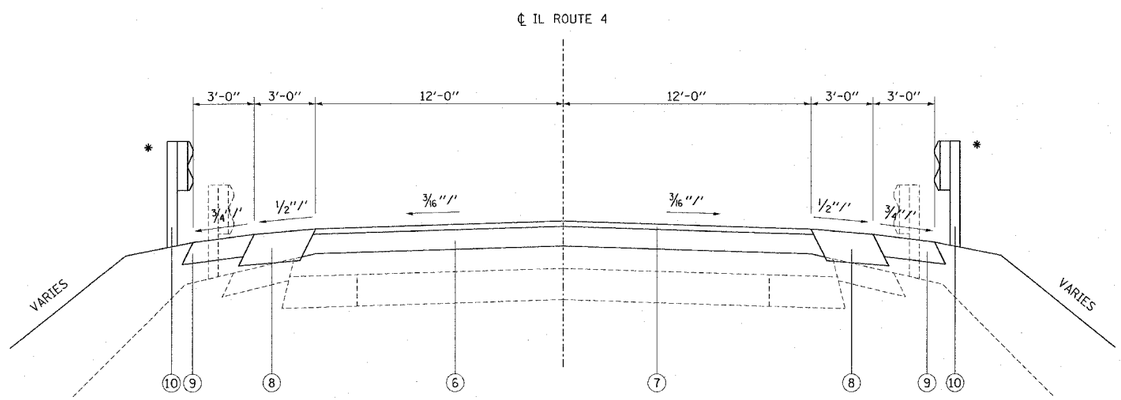

PROPOSED TYPICAL SECTION

STA 258+80 TO STA 261+51
STA 265+51 TO STA 268+80

* STA 259+50.0 TO STA 261+51.0 RT
STA 265+51.0 TO STA 266+71.3 RT
STA 260+30.8 TO STA 261+51.0 LT
STA 265+51.0 TO STA 267+58.8 LT

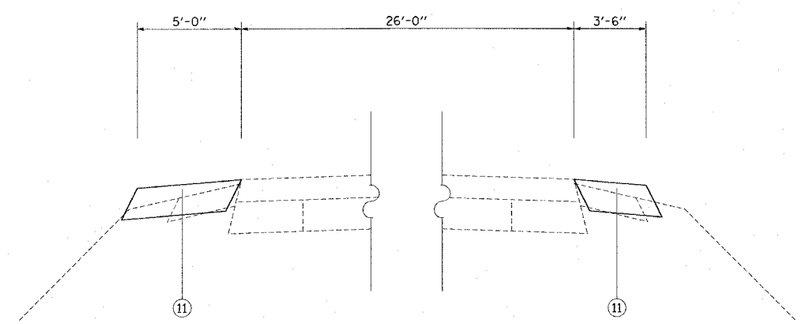

PROPOSED WIDENING FOR STAGE CONSTRUCTION

STA 260+00 TO STA 261+06
STA 265+96 TO STA 267+00

STA 259+50 TO STA 262+21
STA 264+92 TO STA 267+50

REVISIONS	
NAME	DATE

ILLINOIS DEPARTMENT OF TRANSPORTATION

TYPICAL SECTIONS

FAP ROUTE 314
SECTION 108BR-I
MADISON COUNTY
SN 060-0106(E) 0334(P)

DRAWN BY:

PLOT DATE: 10/26/2005

PLAN		BY	DATE
NOTE BOOK NO.	CORRECTED PLOTTED ALIGNMENT CHECKED PLAN AND PROFILE CHECKED CADD FILE NAME		

$$DATE$$
10/26/2005
c:\pwworking\dot\d02781\plan\sht102781e06.dgn
$$USER$$
$$REF$$
$$REF$$