F.A.P. RTE.	SECTION	COUNTY	TOTAL SHEETS	SHEET NO.
870	04-00051-00-SW	DuPAGE	46	31
STA.		TO STA.		
FED. ROAD DIST. NO.	ILLINOIS	FED. AID PROJECT		

CONTRACT NO. 83820

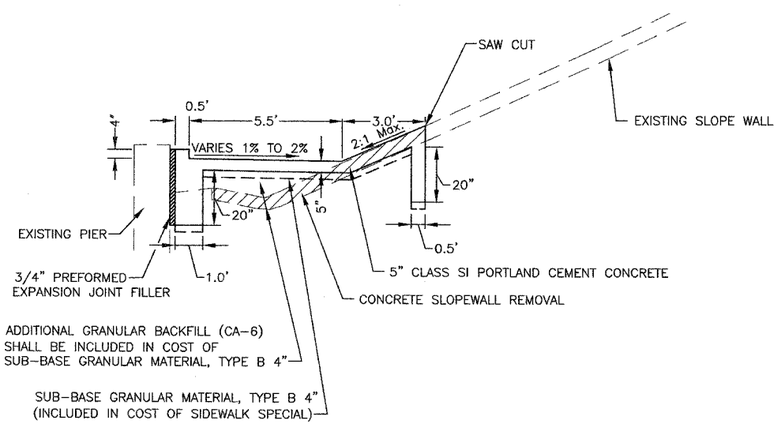

SIDEWALK SPECIAL DETAIL

STA. 49+98 TO STA. 50+74
(OGDEN AVENUE BRIDGE)

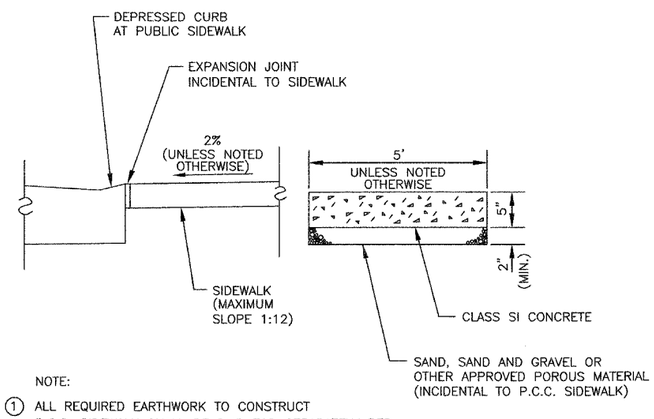

NOTE:

1. ALL REQUIRED EARTHWORK TO CONSTRUCT P.C.C. SIDEWALK SHALL BE PAID FOR SEPARATELY PER SECTIONS 202 & 204 OF THE STANDARD SPECIFICATIONS
2. AT ENTRANCES, THE SIDEWALK THICKNESS SHALL INCREASE TO 7", INCIDENTAL TO P.C.C. SIDEWALK 5"

P.C.C. SIDEWALK 5" DETAIL

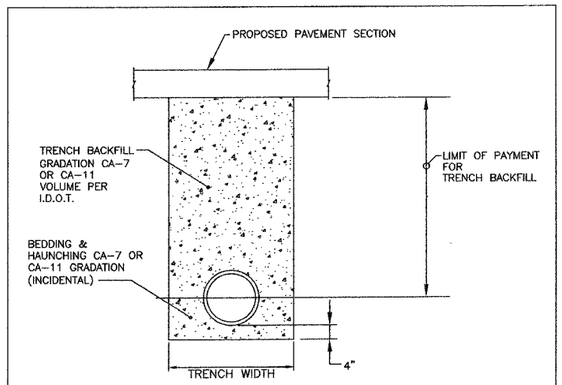

TRENCH WIDTH: MAX.=18"+O.D. WHEN TRENCH < 5'
MAX.=36"+O.D. WHEN TRENCH < 5'

STORM SEWER TRENCH DETAIL

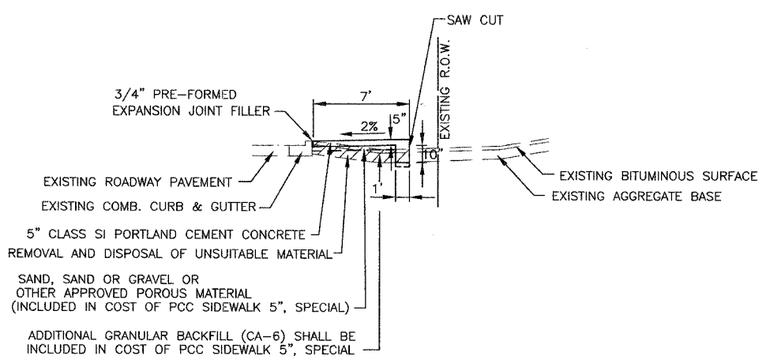

PCC SIDEWALK 5", SPECIAL DETAIL

STA. 37+08 TO STA. 37+39
AND STA. 37+60 TO STA. 38+33

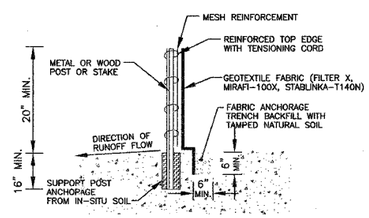

NOTES:

1. DEPENDING UPON CONFIGURATION, ATTACH FABRIC TO WIRE MESH WITH HOG RINGS, STEEL POSTS WITH TIE WIRES, WOOD POSTS WITH NAILS.
2. SILT FENCE SHALL BE REMOVED AS DIRECTED BY THE ENGINEER.
3. PREFABRICATED SILT FENCE MAY BE USED. UNITS BY GEOFAB OR ENVIROFENCE.
4. MAXIMUM POST/STAKE SEPARATION = 10' C-C.

PERIMETER EROSION BARRIER

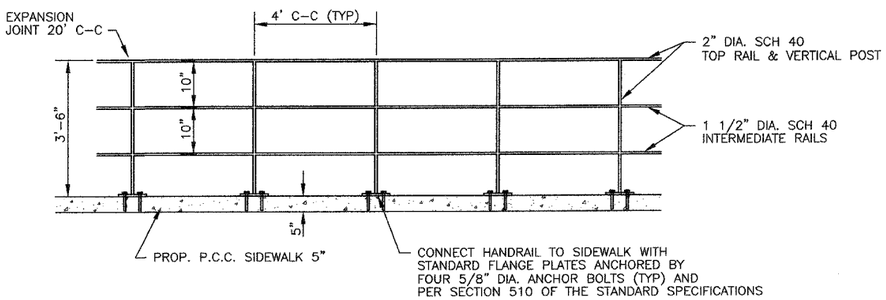

NOTE:
TOP AND INTERMEDIATE RAILS, VERTICAL POST, FLANGE PLATES AND ANCHOR BOLTS SHALL BE MADE OF GALVANIZED STEEL

PIPE HANDRAIL DETAIL

DRAWN SMP	DATE 9/21/05	JAMES J. BENES & ASSOCIATES, INC. 950 Warrenville Road, Suite 101, Lisle, Illinois 60532 Tel. (630) 719-7570 • Fax (630) 719-7589	VILLAGE OF LISLE IL ROUTE 53 SIDEWALK IMPROVEMENTS	REVISIONS NO. / DATE / DESCRIPTION	CONSTRUCTION DETAILS
CHECKED BDH	SCALE NTS		The Arboretum Village		DRAWING NO. 31 OF 46