FAU RTE	SECTION	COUNTY	TOTAL SHEETS	SHEET NO.
7000	02-00212-00-BR	VERMILION	59	37
FROM STA. 96+00.00		TO STA. 103+10.10		
FED. ROAD DIST. NO.	ILLINOIS	FED. AID PROJECT		

CONTRACT NO. 91285

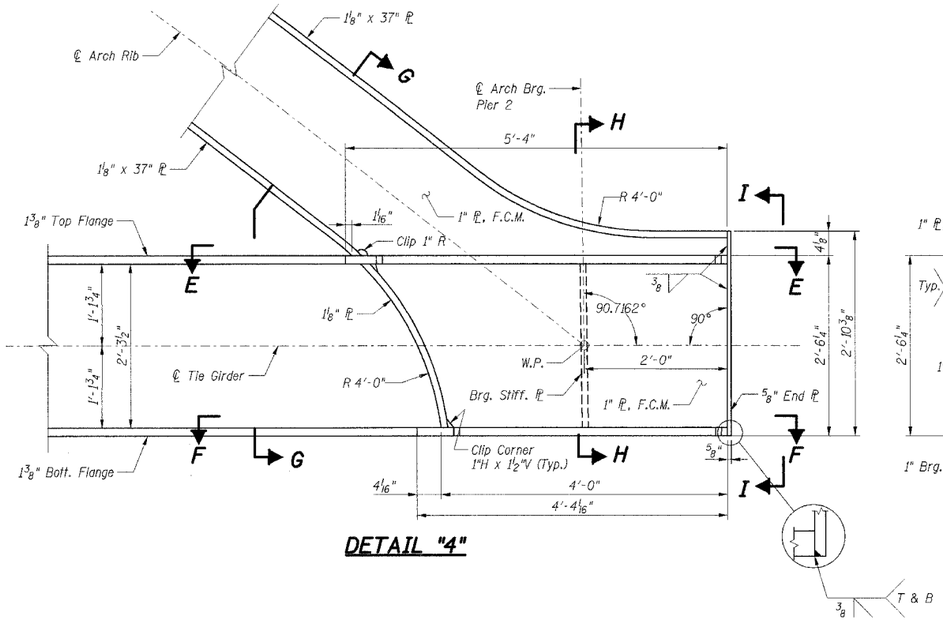

DETAIL "4"

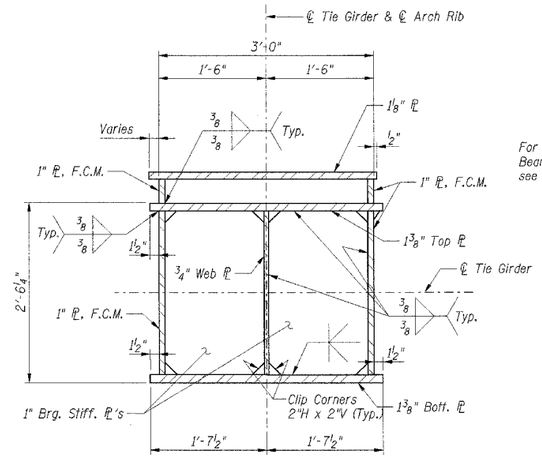

SECTION H-H

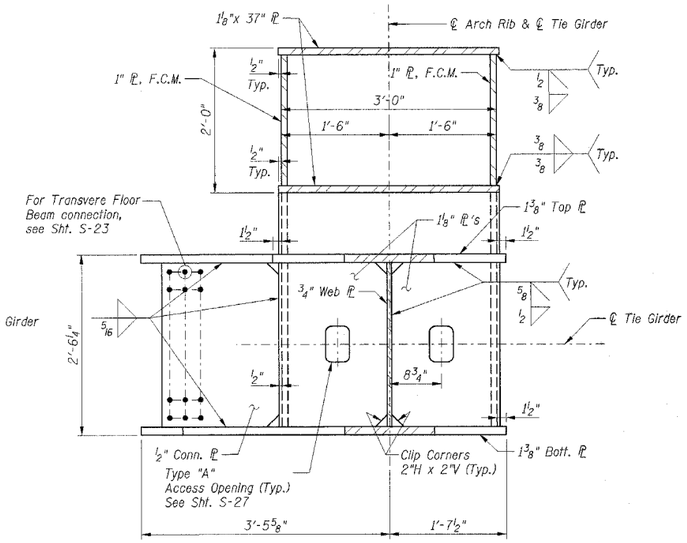

SECTION G-G

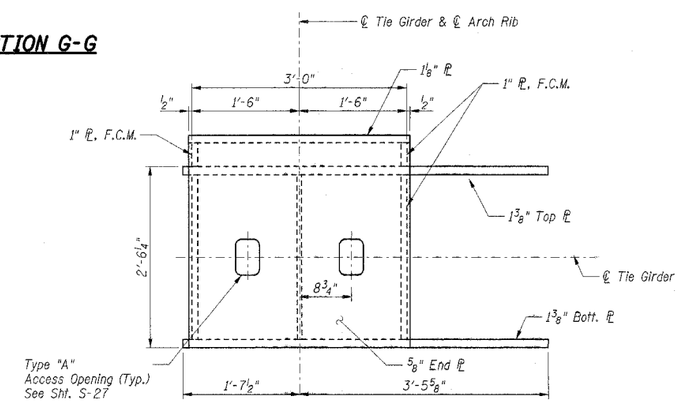

SECTION I-I

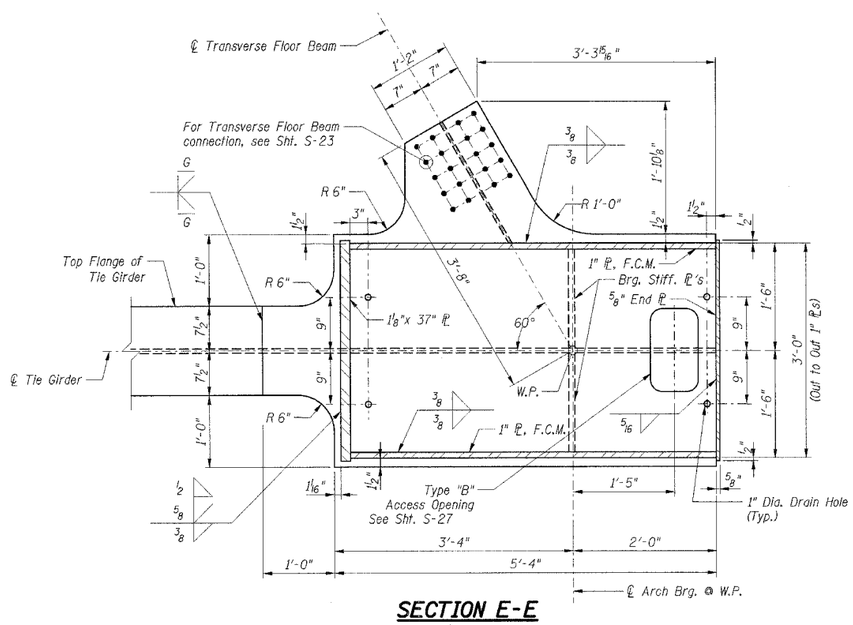

SECTION E-E

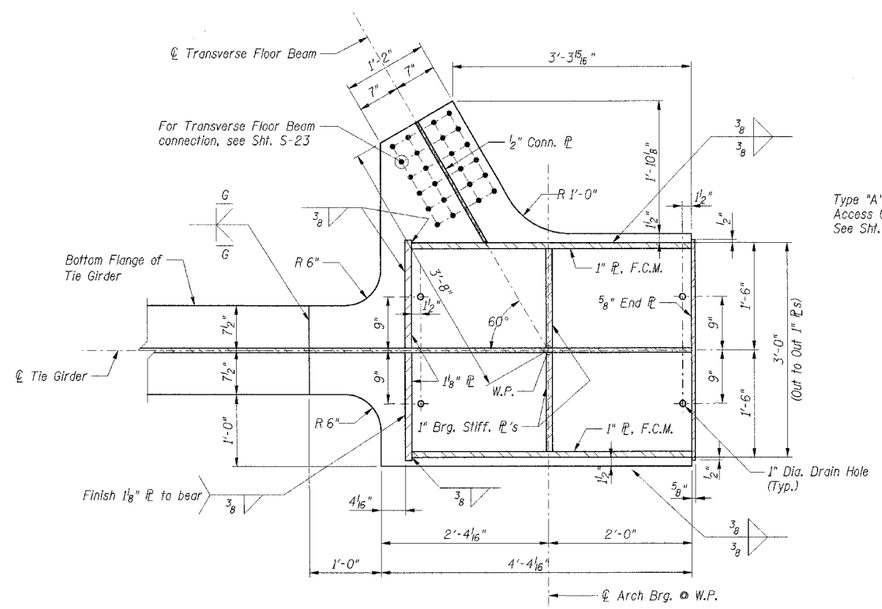

SECTION F-F

Notes:

1. Work this Sheet with Sht. S-19.
2. Members and Member Components designated F.C.M. shall be subject to The Provisions for Fracture Critical Members.
3. All welds to the Girder shall be considered Fracture Critical.

SHT. S-22 OF 40

REVISIONS	
NAME	DATE

CITY OF DANVILLE, ILLINOIS
HUNGRY HOLLOW ROAD BRIDGE

TIE GIRDER DETAILS - II

SCALE:
DATE 12/06/05
DRAWN BY LAR/HBJ
CHECKED BY JRH

TENG

TENG & ASSOCIATES, INC.
ENGINEERS/ARCHITECTS/PLANNERS
303 N. MICHIGAN AVE. CHICAGO, IL 60601
TELEPHONE 312/616-0500

..\TP00023.DGN,..\FRP00P5V.DGN,..\SUD00PV3.DGN
12-07-2005, 3:32:43
S:\DOCUMENT\02336902\STRUCT\DGN\SUD00P#Z.DGN
ROSSPF