CONTRACT # 91353

ROUTE NO.	SECTION	COUNTY	TOTAL SHEETS	SHEET NO.
FAI 57	*	COLES	229	135
FED. ROAD DIST. NO. 7		ILLINOIS	FED. AID PROJECT-	

SHEET NO. 01
02 SHEETS

*99-00124-02-PV

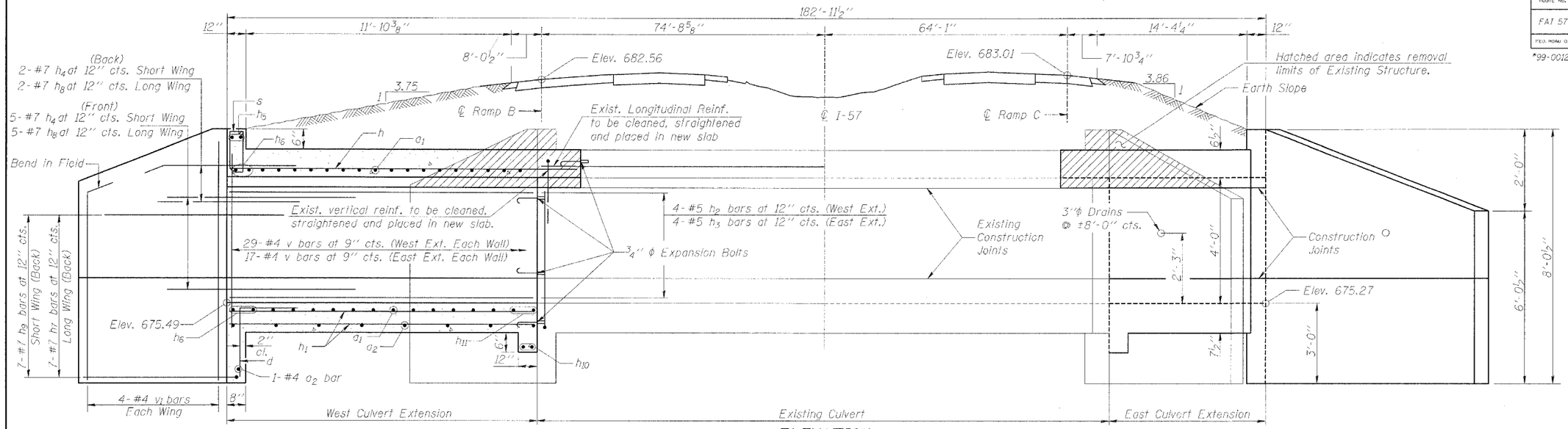

HALF LONG. SECTION

ELEVATION
Dimensions @ Rt. ∠'s to ℄ I-57
Elevations along ℄ Culvert

HALF ELEVATION

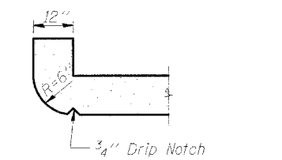

SECTION THRU HEADWALL
(Up Stream End Only)

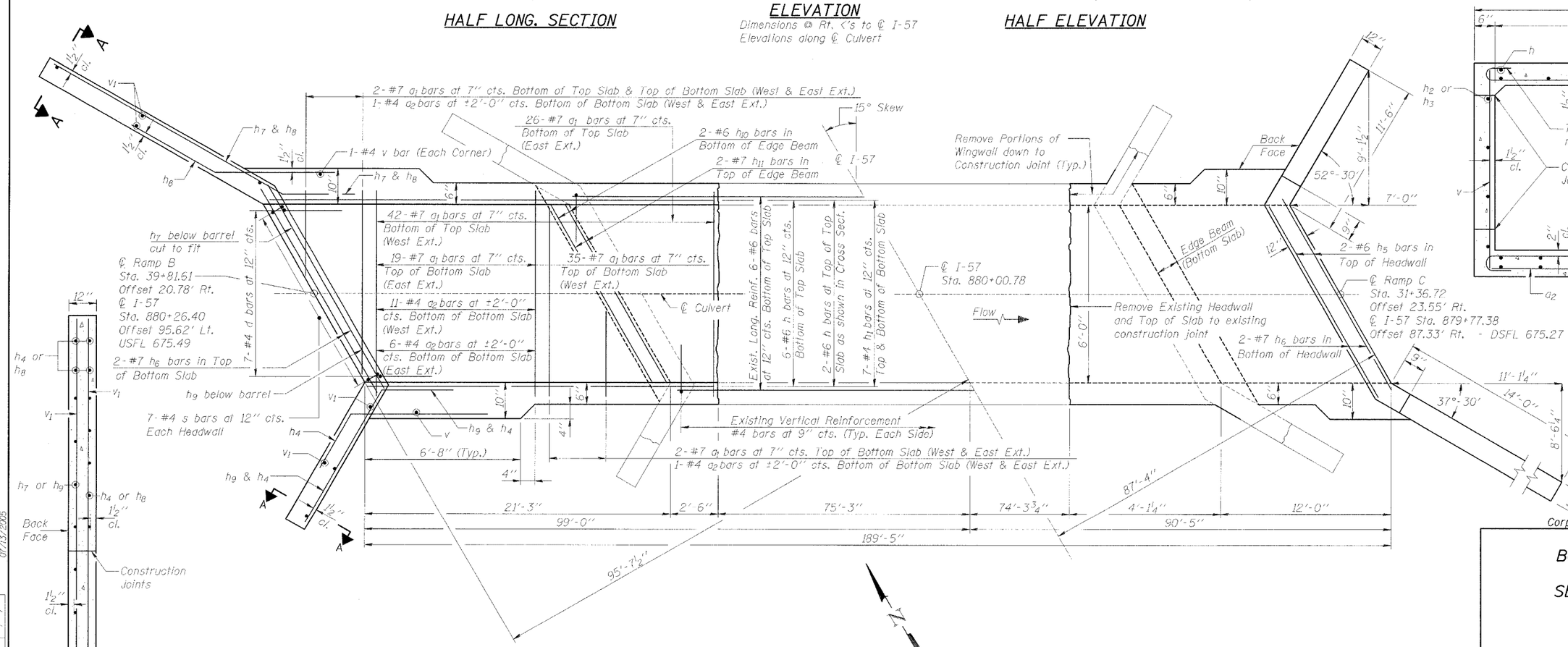

SHOWING REINFORCEMENT

SHOWING OUTLINES

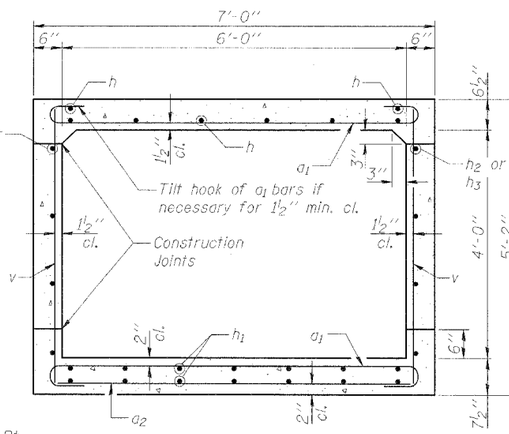

SECTION THRU BARREL

SECTION A-A

PLAN

DESIGN STRESSES
FIELD UNITS
f'c = 3,500 psi
fy = 60,000 psi (reinf.)

LOADING HS20-44

Corporate License Number 184-001-084

BOX CULVERT EXTENSION
F.A.I. RTE. 57
SECTION 99-00124-02-PV
COLES COUNTY
STATION 880+00.78

© Copyright Hanson Professional Services Inc. 2005

HANSON

JOB# 97S2028E
DATE: 09/19/03

LAYOUT	WMM	09/09/03
DRAWN	DAP	09/19/03
REVIEWED	JKM	/ /

I:\97JOBS\97s2028b\Struct\Sht4 Culvert Ext\Culv_Ext.dgn
07/13/2005