CONCRETE COLLAR FOR PRECAST BOX CULVERTS STA. 752+51 LT SIDE

VARIOUS ROUTES
D-9 CONT. MAINT. FY 06-3
VARIOUS CO.
CONTRACT #98924
SHEET 31 OF 42

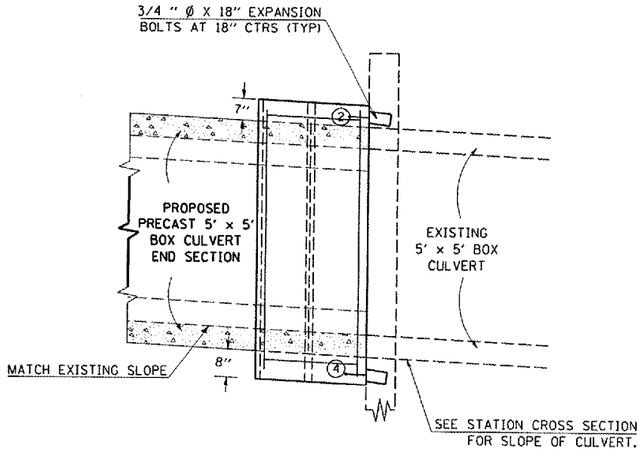

SIDE VIEW
DIMENSIONS SHOWN

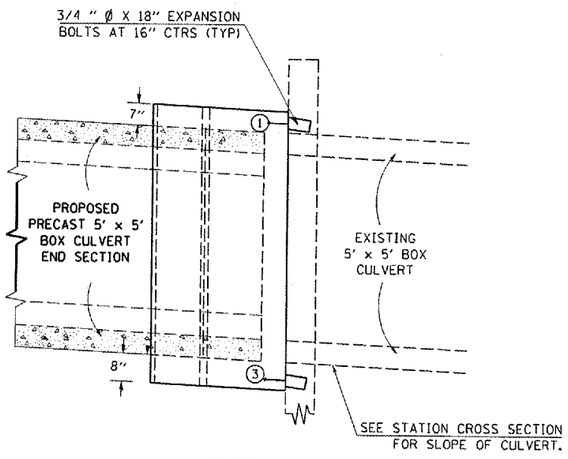

SIDE VIEW
DIMENSIONS SHOWN

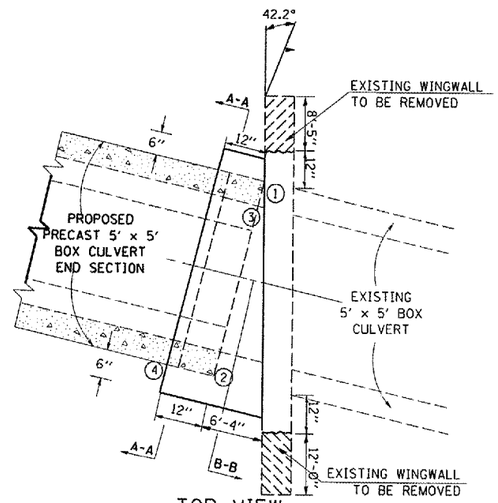

TOP VIEW
DIMENSIONS SHOWN

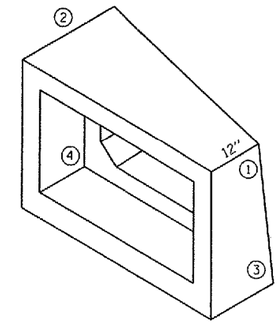

ISOMETRIC VIEW

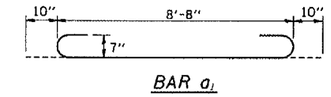

BAR a_1

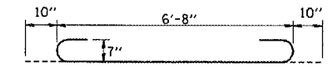

BAR a

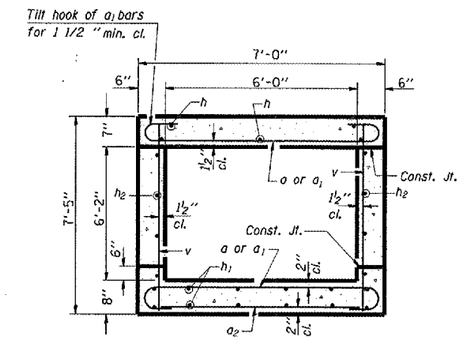

SECTION THRU BARREL

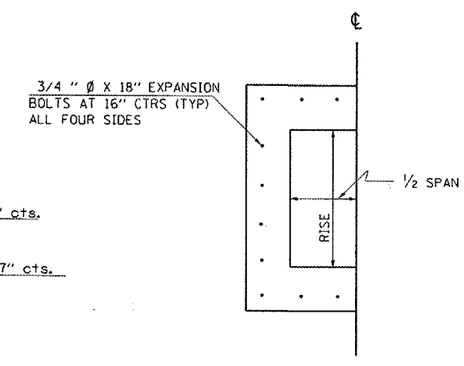

SECTION B-B

BILL OF MATERIAL

Bar	No.	Size	Length	Shape
a	12	#7	8'-4"	
a_1	12	#7	10'-4"	
a_2	5	#4	9'-0"	
h	9	#7	7'-0"	
h_1	8	#4	7'-8"	
h_2	8	#5	7'-8"	
v	13	#4	7'-1"	
Expansion Bolts ¾"			Each	18
Concrete Box Culverts			Cu. Yd.	4.82
Reinforcement Bars			Pound	697

Cut a_2, h, h_1, and h_2 bars in the field to fit.

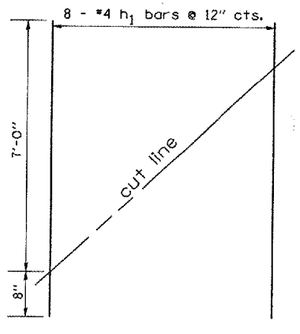

FIELD CUTTING DIAGRAM

Order h_1 bars full length. Cut as shown and use remainder of bars in opposite face.

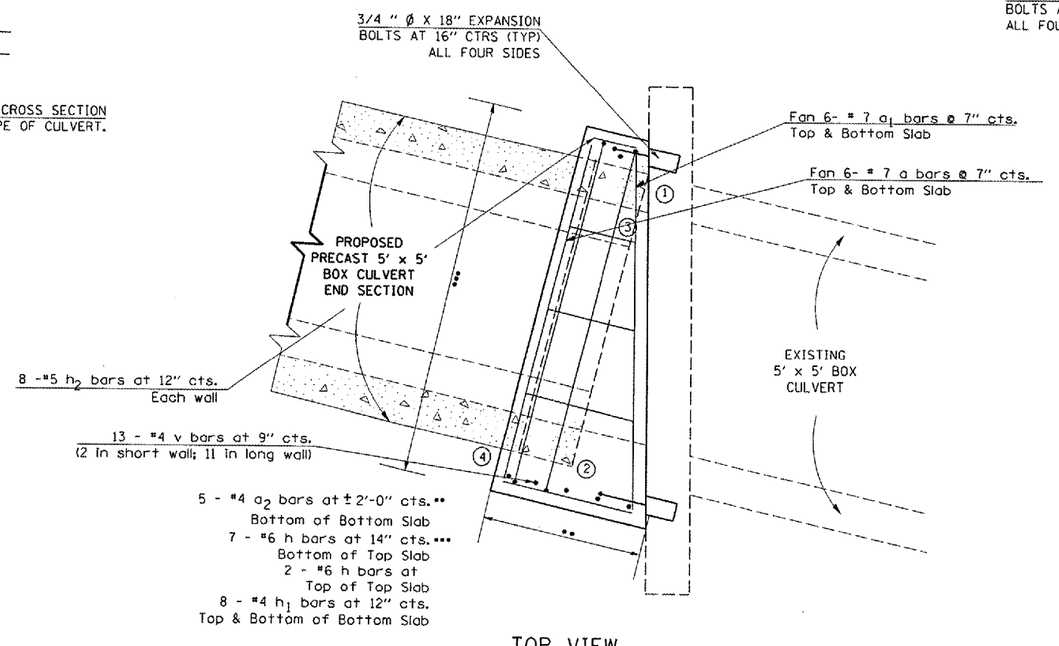

TOP VIEW
REINFORCEMENT SHOWN

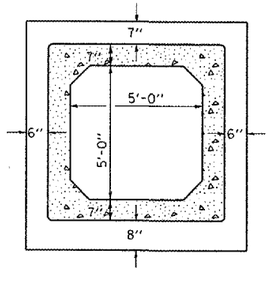

SECTION A-A

NOTES:

ANCHOR BOLTS, MEETING THE REQUIREMENTS OF ARTICLE 1006.09 OF THE STANDARD SPECIFICATIONS, SHALL EXTEND A MINIMUM OF 9 INCHES INTO THE NEW CONCRETE. EXPANSION SHIELDS SHALL PROVIDE A MINIMUM CERTIFIED PROOF LOAD OF 4080 POUNDS.

THE REMOVAL OF SUCH PORTIONS OF THE EXISTING HEADWALLS AND WINGWALLS AS MAY BE REQUIRED SHALL BE INCLUDED IN THE CONTRACT UNIT PRICE FOR PRECAST CONCRETE BOX CULVERTS. CLASS SI CONCRETE SHALL BE USED THROUGHOUT.

PROPOSED PRECAST BOX CULVERT END SECTION SHALL BE INSTALLED PRIOR TO CONSTRUCTION OF THE CAST-IN-PLACE CONCRETE COLLAR.

OLD US 51 - LOCATION #1