J:\2009\246 IDOT PTB 153 Item 21\Cadd\Design\016-1101\W.O. 15 Oriole Steel Plans\016-1101.dgn 12:38:44 PM 12/7/2011

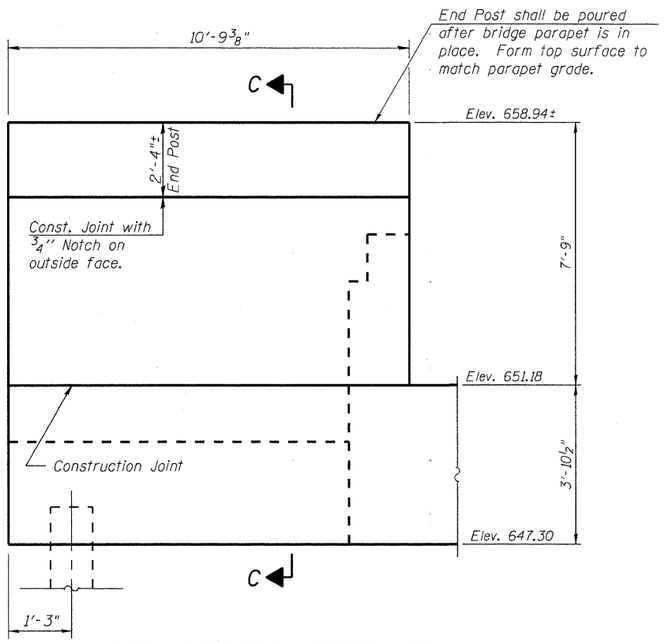

EAST WING WALL ELEVATION
Showing Dimensions

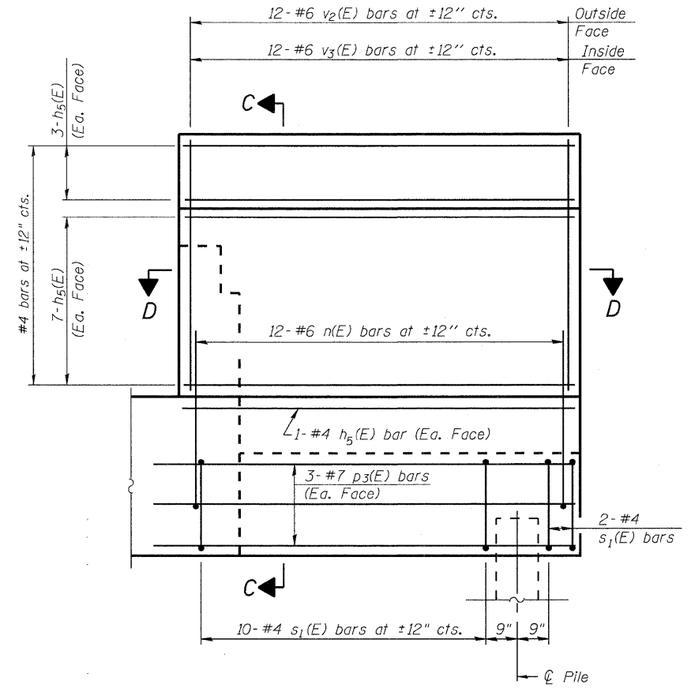

EAST WING WALL ELEVATION
Showing Reinforcement

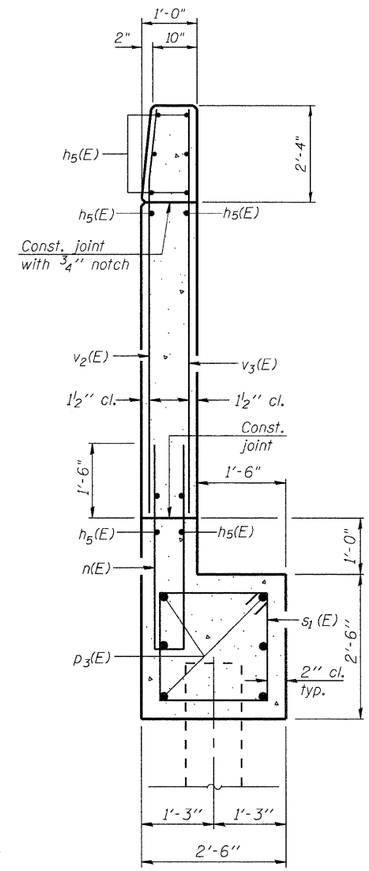

SECTION C-C

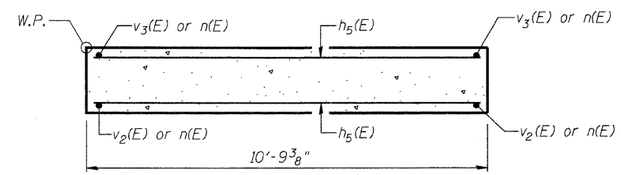

SECTION D-D

ABNA DESIGN FIRM REG. 184.002117	9901 S. Western Ave. Chicago, IL 60643 Ph. 773-881-4788 F: 773.239.3728	DESIGNED - SEA	REVISED -	STATE OF ILLINOIS DEPARTMENT OF TRANSPORTATION	SOUTH ABUTMENT DETAILS STRUCTURE NO. 016-1101	F.A.U. RTE. 90	SECTION 1515.1-B
		CHECKED - RJL	REVISED -			COUNTY COOK	TOTAL SHEETS 101 / SHEET NO. 68
		DRAWN - SCS	REVISED -			STA. TO STA.	CONTRACT NO. 60M79
		CHECKED - SEA	REVISED -		SHEET NO. 25 OF 36 SHEETS	FED. ROAD DIST. NO.	ILLINOIS FED. AID PROJECT