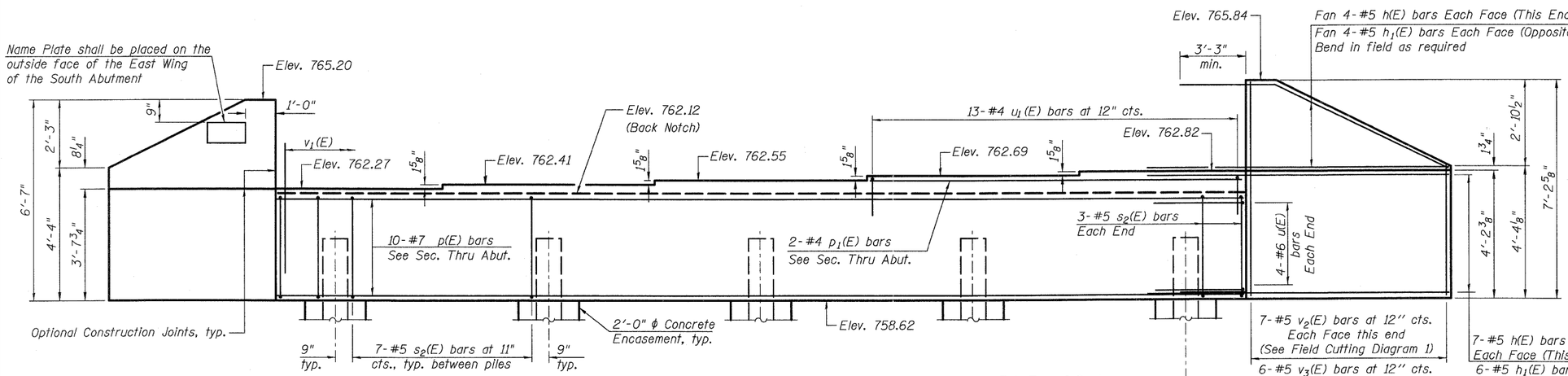

ELEVATION

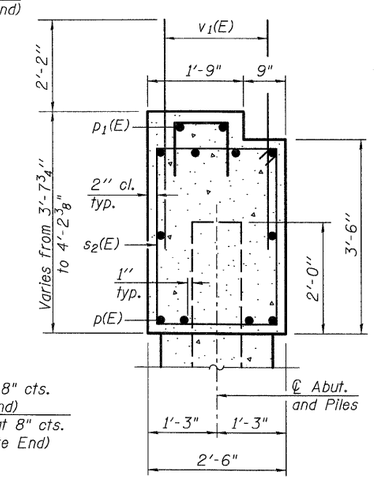

SEC. THRU ABUT.

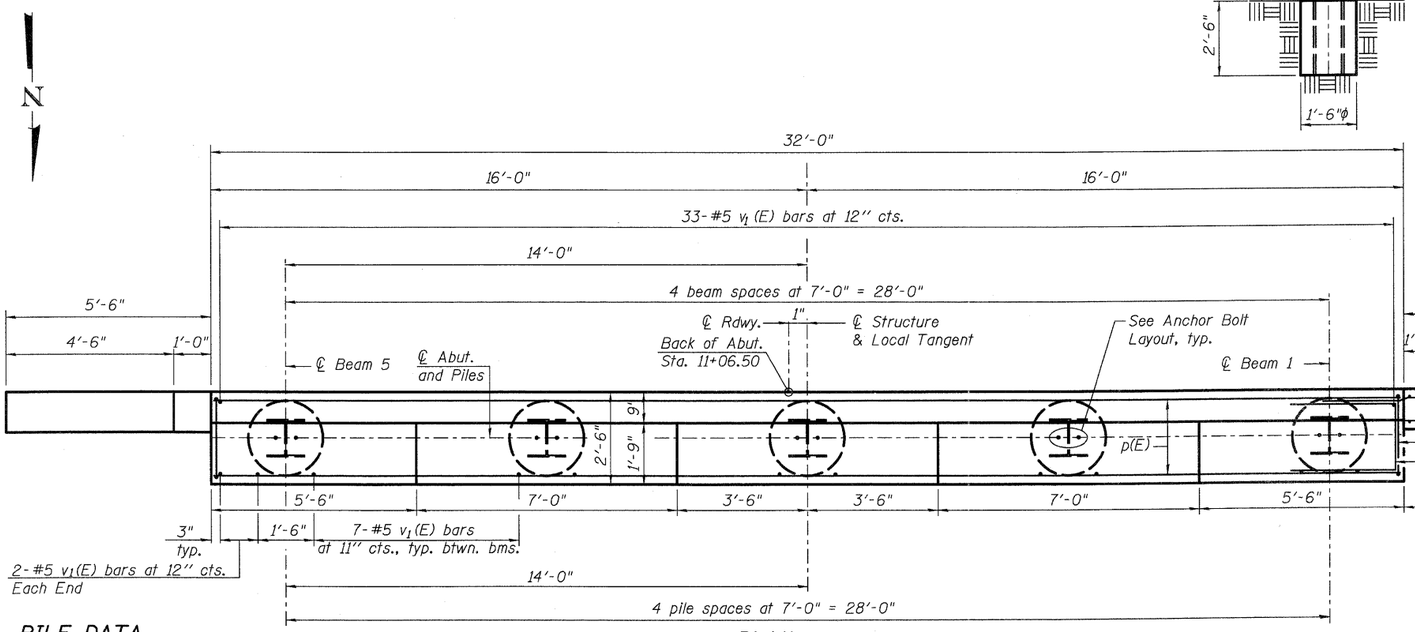

PLAN

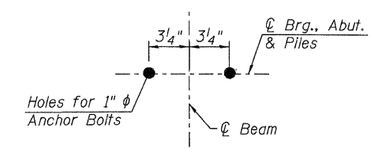

ANCHOR BOLT LAYOUT

BILL OF MATERIAL

Bar	No.	Size	Length	Shape
h(E)	22	#5	10'-0"	
h1(E)	20	#5	8'-9"	
p(E)	10	#7	31'-8"	
p1(E)	2	#4	12'-2"	
s2(E)	34	#5	11'-7"	
u(E)	8	#6	10'-1"	
u1(E)	13	#4	3'-6"	
v1(E)	65	#5	4'-4"	
v2(E)	7	#5	10'-10"	
v3(E)	6	#5	10'-3"	
Structure Excavation		Cu. Yd.	98	
Concrete Structures		Cu. Yd.	13.9	
Concrete Encasement		Cu. Yd.	1.8	
Reinforcement Bars, Epoxy Coated		Pound	2,070	
Furnishing Steel Piles, HP 12x53		Foot	102.5	
Setting Piles In Rock		Each	5	

PILE DATA

Type: Steel HP 12x53
Nominal Required Bearing: Set in Rock
Factored Resistance Available: 209.5 kips
Est. Length: 20.50'
No. Production Piles: 5
No. Test Piles: 0
Estimated Top of Rock: 742.80
Rock Socket Depth: 2.5'
Rock Socket Diameter: 1'-6"

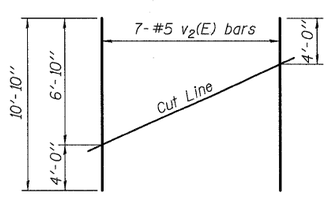

FIELD CUTTING DIAGRAM 1

Order v2(E) full length. Cut as shown and use remainder of bars in opposite face.

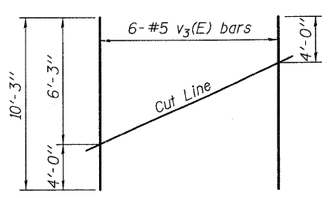

FIELD CUTTING DIAGRAM 2

Order v3(E) full length. Cut as shown and use remainder of bars in opposite face.

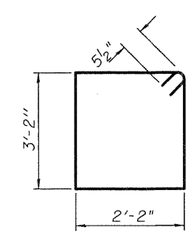

BAR s2(E)

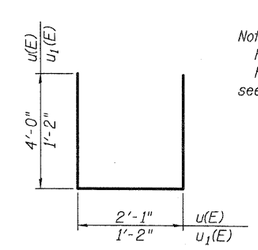

BAR u(E) & u1(E)

Notes:
Pour steps monolithically with cap.
For details of piles and Concrete Encasement, see sheet 17 of 20.