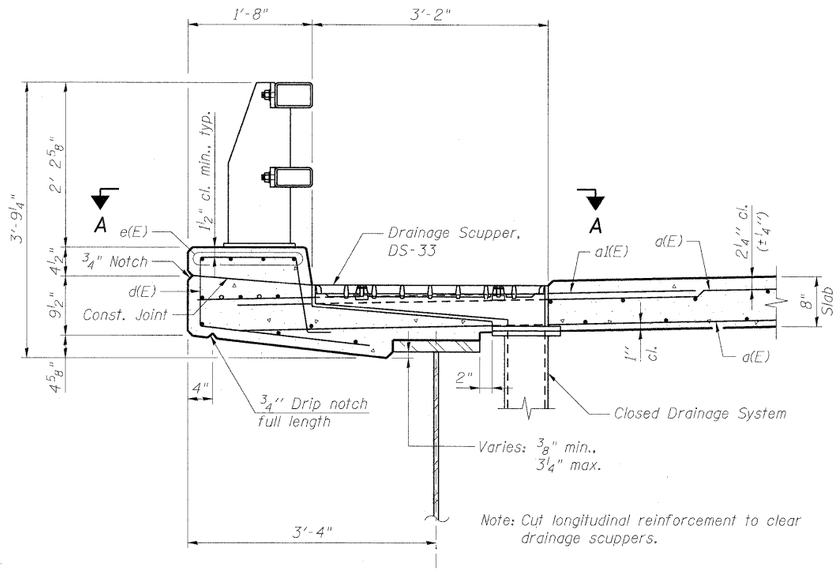

SECTION THRU CURB

(At Scupper)

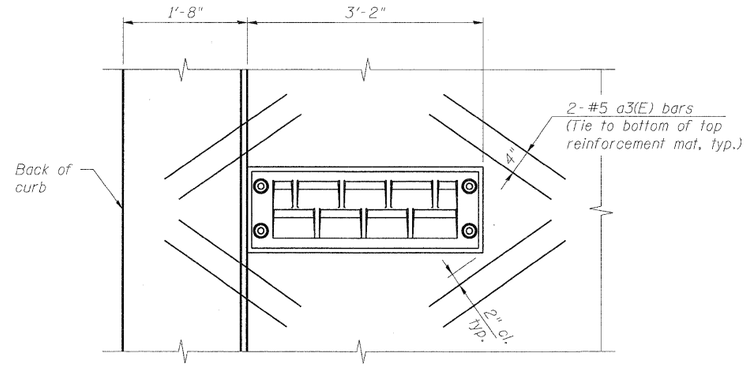

VIEW A-A

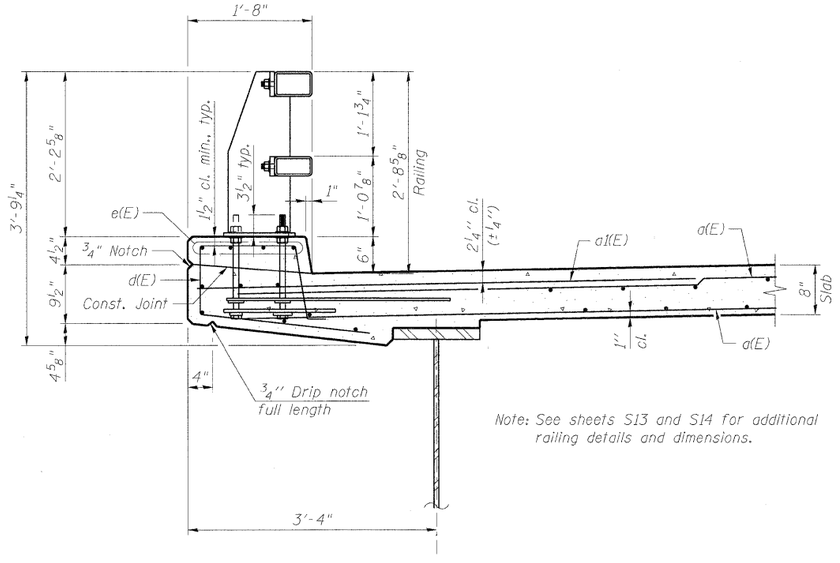

SECTION THRU CURB

(At Railing Anchorage)

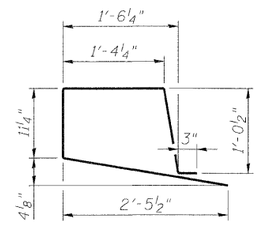

BAR d(E)

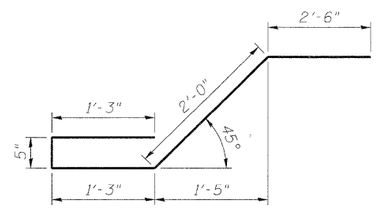

BAR x(E)

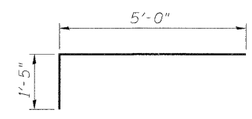

BAR x1(E)

SUPERSTRUCTURE BILL OF MATERIAL

Bar	No.	Size	Length	Shape
a(E)	4082	#5	35'-4"	
a1(E)	5051	#6	6'-6"	
a2(E)	56	#5	6'-11"	
a3(E)	104	#5	2'-0"	
b(E)	1170	#5	41'-7"	
b1(E)	756	#6	30'-11"	
b2(E)	1152	#5	35'-2"	
d(E)	2510	#5	6'-1"	
e(E)	240	#5	41' 7"	
x(E)	48	#5	7'-5"	
x1(E)	96	#5	6'-5"	
Reinforcement Bars, Epoxy Coated			Pound	355,900
Concrete Superstructure			Cu. Yd.	1,148.9
Bridge Deck Grooving			Sq. Yd.	3,849
Protective Coat			Sq. Yd.	4,653

benesch engineers · scientists · planners
Alfred Benesch & Company
205 North Michigan Avenue, Suite 2400
Chicago, Illinois 60601
312-565-0450 Job No. 10092

FILE NAME = 0456024_012_DeckDtls.dgn	USER NAME = akeaschall	DESIGNED - JLS	REVISED -
		CHECKED - AJK	REVISED -
	PLOT SCALE =	DRAWN - RMG	REVISED -
	PLOT DATE = 11/9/2011	CHECKED - HMA	REVISED -

CITY OF ST. CHARLES

DECK DETAILS AND BILL OF MATERIAL
STRUCTURE NO. 045-6024 RED GATE ROAD OVER THE FOX RIVER
SHEET NO. S12 OF S56 SHEETS

F.A.I. RTE.	SECTION	COUNTY	TOTAL SHEETS	SHEET NO.
	04-00092-00-BR	KANE	440	234
		CONTRACT NO. 63650		
	ILLINOIS	FED. AID PROJECT		

x:\10000s\10092\engineering_documents_redgatephase11\groverfoxriver\final\plans\0456024_012_DeckDtls.dgn 11/9/2011 5:02:28 PM