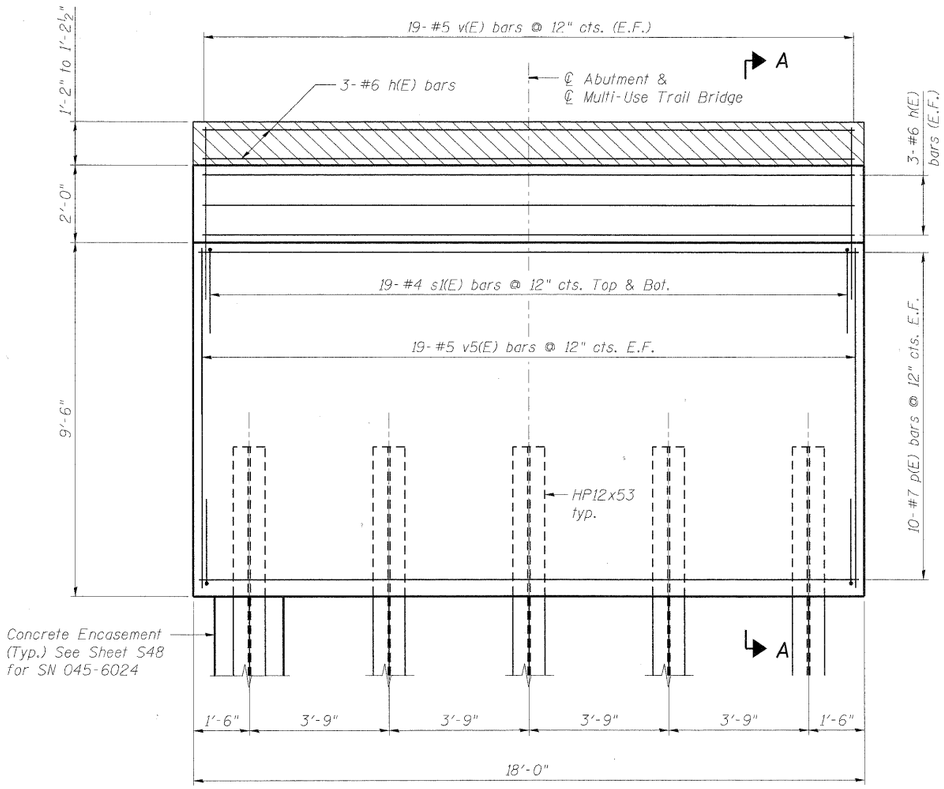

ELEVATION

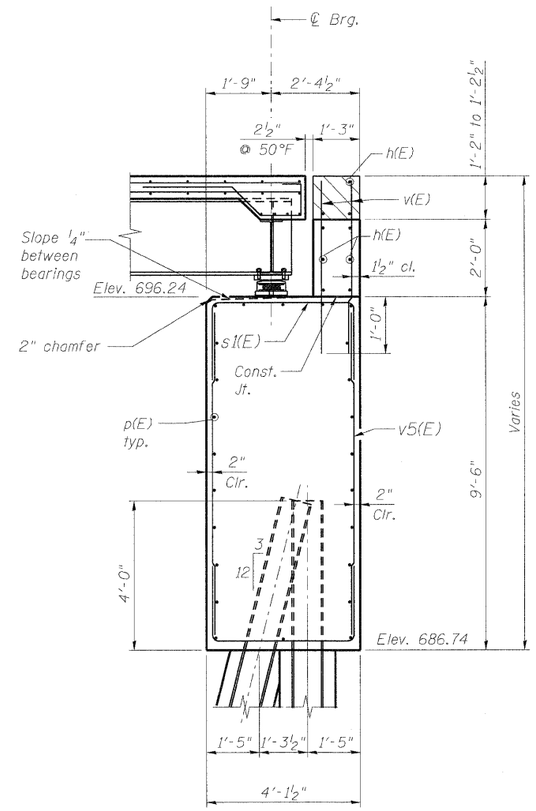

SECTION A-A

BILL OF MATERIAL

Bar	No.	Size	Length	Shape
h(E)	9	#6	17'-8"	
p(E)	24	#7	17'-8"	
s1(E)	38	#4	9'-11"	
v(E)	38	#5	4'-9"	
v5(E)	38	#5	9'-2"	

Structure Excavation	Cu. Yd.	15.0
Concrete Superstructure	Cu. Yd.	1.0
Concrete Structures	Cu. Yd.	27.8
Reinforcement Bars, Epoxy Coated	Pound	1,910
Furnishing Steel Piles, HP12x53	Foot	100
Driving Piles	Foot	100
Test Pile Steel, HP12x53	Each	1
Pile Shoes	Each	5
Anti-Graffiti Coating	Sq. Ft.	462
Concrete Sealer	Sq. Ft.	430
Concrete Encasement	Cu. Yd.	1.8

LEGEND

Vertical Pile

Battered Pile

PILE DATA

Type: HP12x53 with pile shoes
Nominal Required Bearing: 100 kips
Factored Resistance Available: 55 kips
Est. Length: 25 feet
No. Production Piles: 4
No. Test Piles: 1

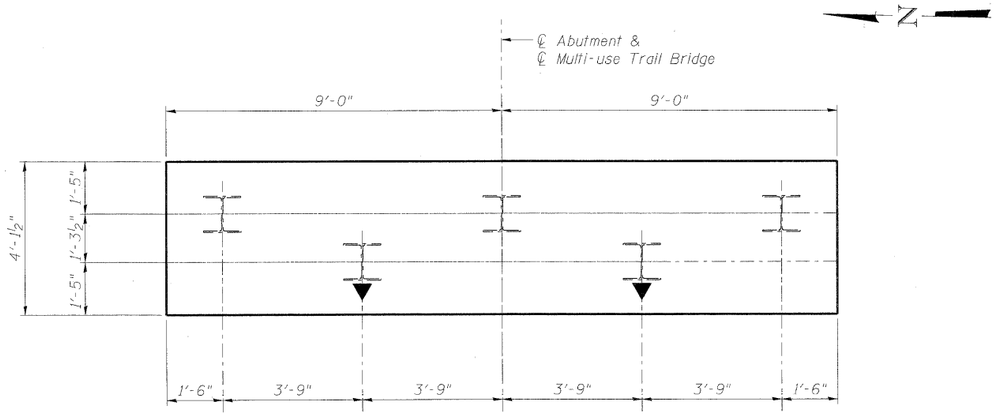

PILE LAYOUT

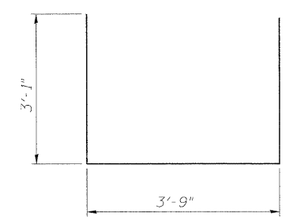

BAR s1(E)

NOTES:

1. E.F. denotes Each Face.
2. For pile details, see sheet S48 of Structure No. 045-6024.
3. Contractor is responsible to coordinate boardwalk termination details with the abutment backwall.

benesch
engineers · scientists · planners
Alfred Benesch & Company
205 North Michigan Avenue, Suite 2400
Chicago, Illinois 60601
312-565-0450
Job No. 10092

FILE NAME = 045602_18_EAbutDtls.dgn	USER NAME = akeaschall	DESIGNED - MJF	REVISED -
		CHECKED - AJK	REVISED -
	PLOT SCALE =	DRAWN - RMG	REVISED -
	PLOT DATE = 11/10/2011	CHECKED - AJK	REVISED -

CITY OF ST. CHARLES

EAST ABUTMENT DETAILS
STRUCTURE NO. 045-6020 MULTI-USE TRAIL BRIDGE OVER FOX RIVER
SHEET NO. SM18 OF SM19 SHEETS

F.A.I. RTE.	SECTION	COUNTY	TOTAL SHEETS	SHEET NO.
	04-00092-00-BR	KANE	440	296
		CONTRACT NO. 63650		
		ILLINOIS FED. AID PROJECT		

x:\10000s\10092\engineering_documents_redgatephaseii\pedbridgeoverfoxriver\final\plans\045602_18_EAbutDtls.dgn
4:13:23 PM
11/10/2011