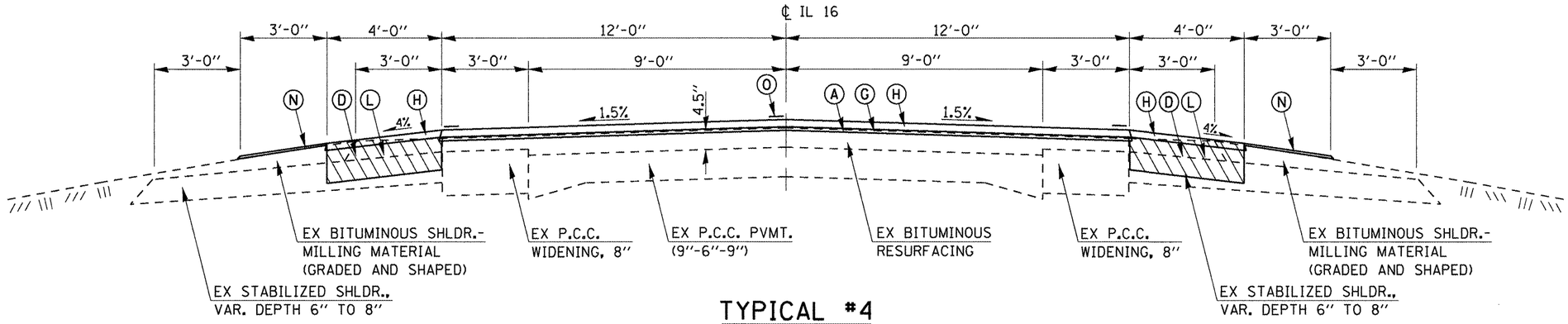

TYPICAL #4

STA. 131+19.80 TO STA. 156+47.26

PROPOSED LEGEND

- (A) HMA SURFACE REMOVAL, VARIABLE DEPTH (1/2" @ ℄)
- (D) PAVED SHOULDER REMOVAL SPECIAL, 6"
- (E) HMA SURFACE REMOVAL, VARIABLE DEPTH
- (G) LEVELING BINDER (MACHINE METHOD), N70, 3/4"
- (H) HMA SURFACE COURSE, MIX "D", N70, 1 1/2"
- (J) HMA SURFACE COURSE, MIX "D", N70, 2 1/4" (AVG. DEPTH)
- (L) HMA SHOULDERS, 6 1/4"
- (N) AGGREGATE WEDGE SHOULDER, TYPE B
- (O) PAVEMENT MARKING LINE

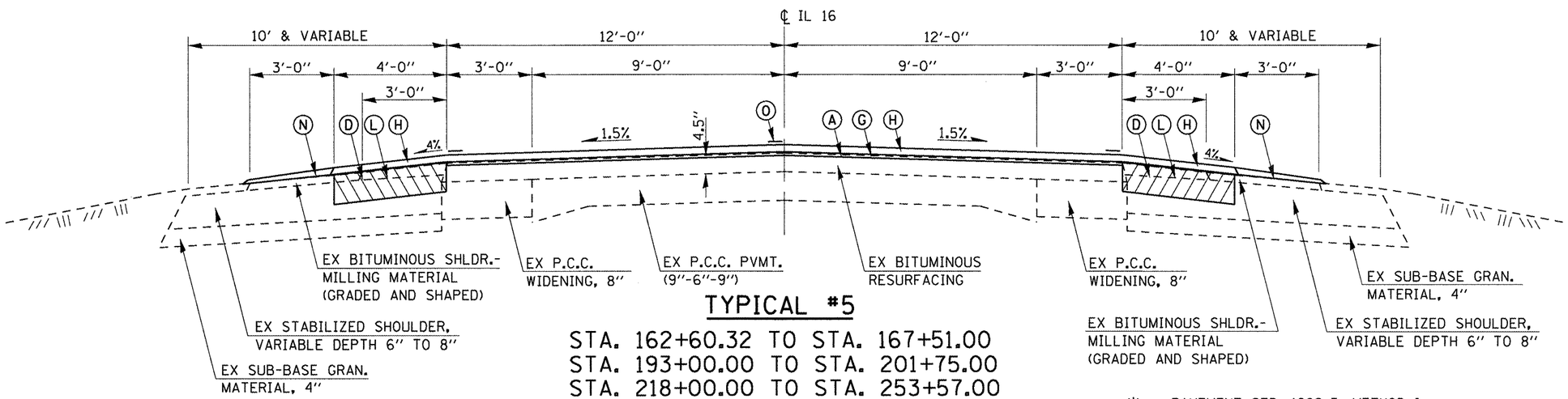

TYPICAL #5

STA. 162+60.32 TO STA. 167+51.00
STA. 193+00.00 TO STA. 201+75.00
STA. 218+00.00 TO STA. 253+57.00
STA. 260+17.00 TO STA. 267+00.00
STA. 298+00.00 TO STA. 338+00.08 *

* — PAVEMENT STD. 1909-5, METHOD I,
OVER EXISTING CULVERT
STA. 324+47.69 TO STA. 325+05.31

*- (15, 21)RS-7, 22RS-4, 24RS-8
**- 42, 325

FILE NAME = c:\pw_work\pwidot\sparksgw\d0222005\D672D67-sht-typical.dgn	USER NAME = sparksgw	DESIGNED - RTS	REVISED -
		DRAWN - RTS	REVISED -
	PLOT SCALE = 40.0000 ' / in.	CHECKED -	REVISED -
	PLOT DATE = Aug-25-2011 10:14:22AM	DATE - 4-26-11	REVISED -

STATE OF ILLINOIS
DEPARTMENT OF TRANSPORTATION

TYPICAL CROSS SECTIONS

SCALE: | SHEET NO. 6 OF 11 SHEETS | STA. | TO STA.

F.A.P. RTE.	SECTION	COUNTY	TOTAL SHEETS	SHEET NO.
**	*	MONTGOMERY	80	12
		CONTRACT NO. 72D67		

FED. ROAD DIST. NO. | ILLINOIS | FED. AID PROJECT