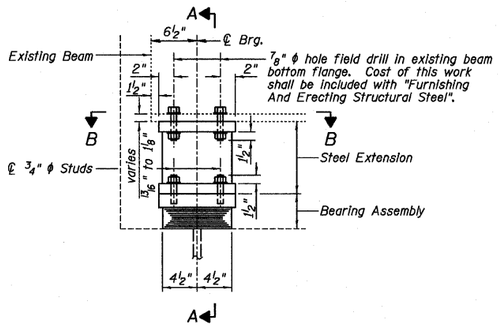

ELEVATION AT WEST ABUT.

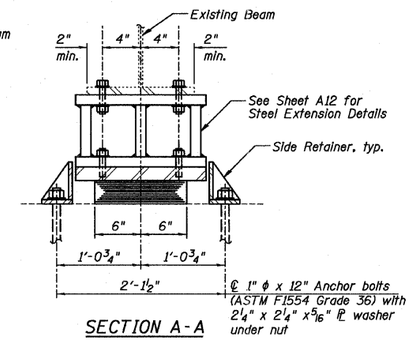

SECTION A-A

TYPE I ELASTOMERIC EXP. BRG.

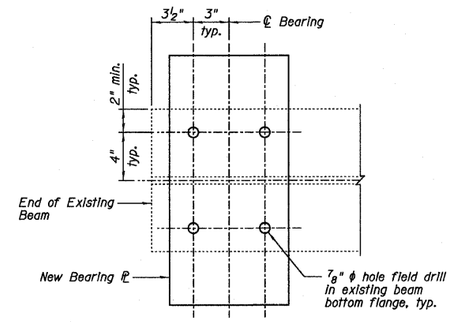

PLAN VIEW B-B

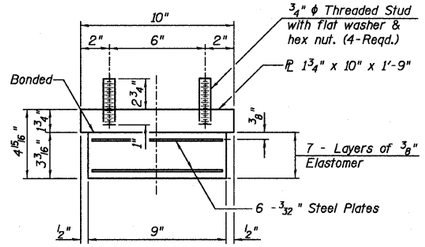

BEARING ASSEMBLY

Note:
Shim plates shall not be placed under Bearing Assembly.

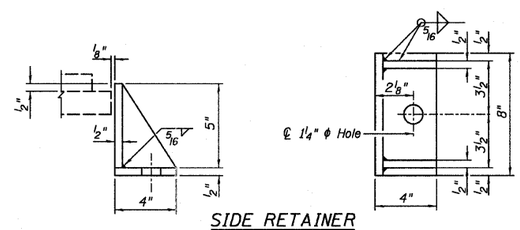

SIDE RETAINER

Equivalent rolled angle with stiffeners will be allowed in lieu of welded plates.

Notes:
Anchor bolts shall be ASTM F1554 all-thread (or an Engineer-approved alternate material) of the grade(s) and diameter(s) specified. ASTM A307 Grade C anchor bolts may be used in lieu of ASTM F1554 Grade 36 (Fy=36ksi). The corresponding specified grade of AASHTO M314 anchor bolts may be used in lieu of ASTM F1554.

Drilled and set anchor bolts shall be installed according to Article 521.06 of the Standard Specifications.

Side retainers and other steel members required for the elastomeric bearing assembly shall be included in the cost of Elastomeric Bearing Assembly, Type I.

BILL OF MATERIAL

ITEM	UNIT	082-0167	082-0168	TOTAL
Furnishing and Erecting Structural Steel	Pound	210	210	420
Anchor Bolts, 1"	Each	24	24	48
Elastomeric Bearing Assembly, Type I	Each	12	12	24

NOTES:

1.) Two ⅛ in. adjusting shims shall be provided for each bearing in addition to all other plates or shims and placed as shown on bearing details.
2.) See Special Provisions for Jacking and Removing procedures for existing bearings.
3.) Prior to ordering any material, the Contractor shall verify in the field all bearing height and shim thickness dimensions.
4.) Steel extensions, shim ⅊ and connection bolts shall be paid for as "Furnishing and Erecting Structural Steel". For steel extensions, see Bill of Material on Sheet A12.
5.) Minimum jack capacity = 70 tons.

Farnsworth GROUP, INC.
2709 McGraw Drive
Bloomington, Illinois 61704
309/663-8435, 309/663-1571 fax

	DESIGNED - JCZ	REVISED
	CHECKED - JML	REVISED
	DRAWN - DJM/JWK	REVISED
DATE - 12/05/11	CHECKED - MSW	REVISED

STATE OF ILLINOIS
DEPARTMENT OF TRANSPORTATION

TYPE I BEARING DETAILS, WEST ABUTMENT
STRUCTURE NO. 082-0167 (E.B.)
STRUCTURE NO. 082-0168 (W.B.)

SHEET NO. A13 OF 21 SHEETS

F.A.I. RTE.	SECTION	COUNTY	TOTAL SHEETS	SHEET NO.
64	82-(3,4)RS	ST. CLAIR	167	113
		CONTRACT NO. 76415		
	ILLINOIS	FED. AID PROJECT		

24-8570