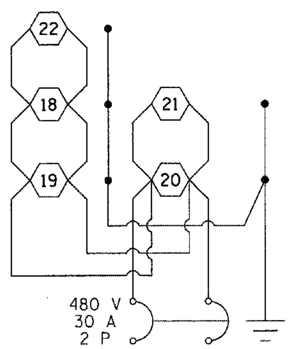


CIRCUIT 1

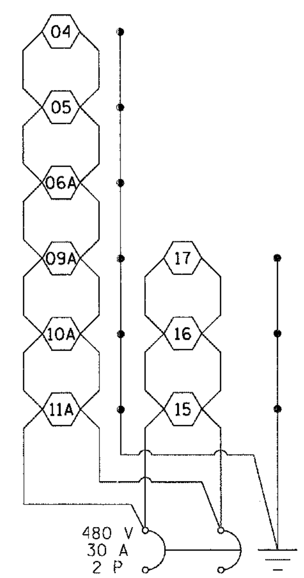


CIRCUIT 2

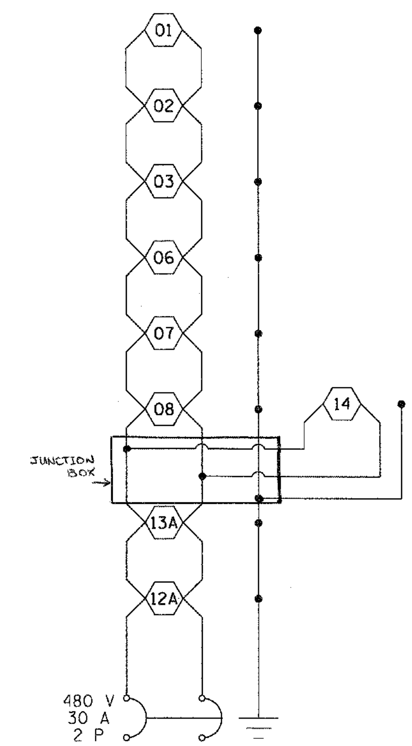


CIRCUIT 3

NEW CONTROLLER #1 WIRING DIAGRAM

$$$$ref_list_name$$$$ $$$$date_time$$$$ $$user$$ $$$$$$$$$$$$$$$$$$dgn_name$$$$$$$$$$$$$$$$$$$$$$$$

| | | | | |
|---|---|---|---|---|
| FILE NAME = | USER NAME = $USER$ | DESIGNED - AAB | REVISED - | |
| $FILEL$ | | DRAWN - MNR | REVISED - | |
| ABNA ENGINEERING INC. PROFESSIONAL ENGINEERS EAST ST. LOUIS, ILLINOIS | PLOT SCALE = $SCALE$ | CHECKED - JL | REVISED - | |
| ABNA engineering | PLOT DATE = $DATE$ | DATE - 10/21/11 | REVISED - | |

**STATE OF ILLINOIS**
**DEPARTMENT OF TRANSPORTATION**
I-70 CONNECTION

**CONTROLLER WIRING DIAGRAMS**

SCALE: | SHEET NO. 1 OF 1 SHEETS | STA. TO STA.

| F.A.P. RTE. | SECTION | COUNTY | TOTAL SHEETS | SHEET NO. |
|---|---|---|---|---|
| 998 | 82-2-1K | ST. CLAIR | 353 | 268 |
| | | CONTRACT NO. 76E06 | | |
| FED. ROAD DIST. NO. | ILLINOIS | FED. AID PROJECT | | |