1-20-2012 LETTING ITEM 095

F.A.P. RTE.	SECTION	COUNTY	TOTAL SHEETS	SHEET NO.
686	114B-1	JACKSON	114	1
		ILLINOIS	CONTRACT NO. 78049	

INDEX OF SHEETS

1	COVER SHEET, INDEX OF SHEETS
2	SIGNATURES, STANDARDS, GENERAL NOTES, MIXTURE REQUIREMENTS
3-4	SUMMARY OF QUANTITIES
5-7	TYPICAL SECTIONS OF IL RTE 4
8-9	TYPICAL SECTIONS OF DETOUR RD
10-12	SCHEDULES OF QUANTITIES
13-15	PLAN - PROFILE
16-17	INTERSECTION DETAILS ON DETOUR RD
18	DETOUR SIGNING SHEET
19	GUARDRAIL AND SHOULDER LAYOUT SHEET
20	EROSION CONTROL SHEET
21-22	ROW SHEETS
23-24	DISTRICT STANDARDS
25-51	CROSS SECTIONS ON IL RTE 4
52-79	CROSS SECTIONS AT INTERSECTION IMPROVEMENTS ON DETOUR RD
80-114	STRUCTURE PLANS

STATE OF ILLINOIS
DEPARTMENT OF TRANSPORTATION
DIVISION OF HIGHWAYS

PROPOSED HIGHWAY PLANS

FAP ROUTE 686 (IL 4)
SECTION 114B-1
JACKSON COUNTY
STRUCTURE REPLACEMENT
IL 4 OVER BEAUCOUP CREEK
SN 039-0042 (E)
SN 039-0074 (P)

C-99-033-08

PROJECT ACF-0686(012)

D-99-022-08

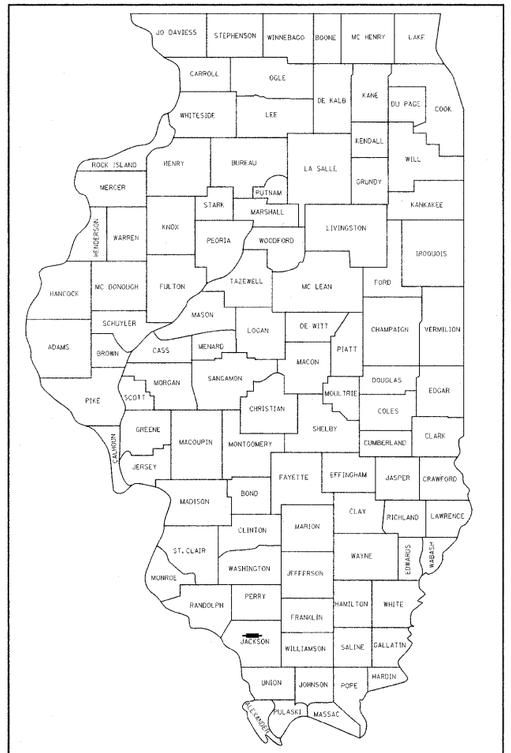

LOCATION OF SECTION INDICATED THUS:-

TRAFFIC DATA

2009 ADT = 1600

7.8% TRUCKS

POSTED SPEED = 55 MPH

PROPOSED PROJECT BEGINS
STA 1108+00

PROPOSED PROJECT ENDS
STA 1127+00

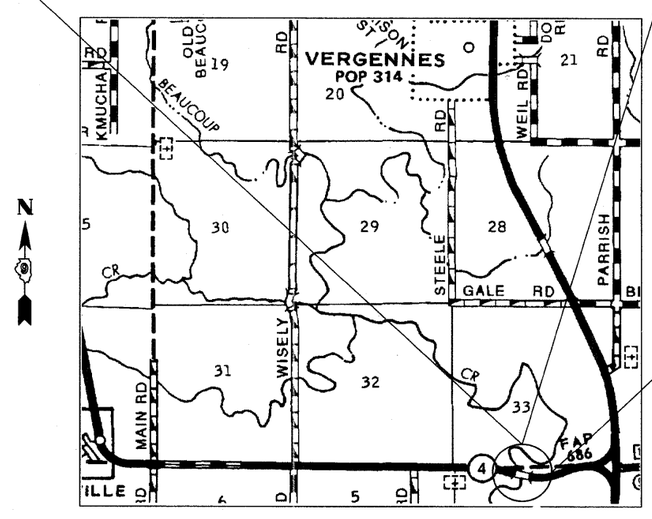

N

PROPOSED PROJECT LOCATION
STA 1120+00
SN 039-0042 (EXISTING)
SN 039-0074 (PROPOSED)
IL 4 OVER BEAUCOUP CREEK

VERGENNES TOWNSHIP

100' 200' 300' — 1" = 100'
0 10' 20' 30' — 1" = 10'
0 50' 100' — 1" = 50'
0 50' 100' — 1" = 40'
0 50' 100' — 1" = 30'
0 50' 100' — 1" = 20'

FULL SIZE PLANS HAVE BEEN PREPARED USING STANDARD ENGINEERING SCALES. REDUCED SIZED PLANS WILL NOT CONFORM TO STANDARD SCALES. IN MAKING MEASUREMENTS ON REDUCED PLANS, THE ABOVE SCALES MAY BE USED.

J.U.L.I.E.
JOINT UTILITY LOCATION INFORMATION FOR EXCAVATION
1-800-892-0123
OR 811

PROJECT ENGINEER: T. WAYNE HALSTEAD (618) 351-5228
PROJECT MANAGER: DAVID PICHE (618) 351-5227

GROSS LENGTH = 1900 FT.
NET LENGTH = 1900 FT.

STATE OF ILLINOIS
DEPARTMENT OF TRANSPORTATION
DIVISION OF HIGHWAYS

SUBMITTED Oct 13th 20 11
Thomas Jenn
DEPUTY DIRECTOR OF HIGHWAYS, REGION ENGINEER

December 9 20 11
Scott E. Stitt, P.E. /a
acting ENGINEER OF DESIGN AND ENVIRONMENT

December 9 20 11
William R. Frey /a
Interim DIRECTOR OF HIGHWAYS, CHIEF ENGINEER

PRINTED BY THE AUTHORITY OF THE STATE OF ILLINOIS

CONTRACT NO. 78049

FILE NAME = c:\pw_work\pwidot\portervc\dms49708\78049-sht-pln.dgn

GENERAL NOTES

1) THE THICKNESS OF HOT-MIX ASPHALT MIXTURE SHOWN ON THE PLANS IS THE NOMINAL THICKNESS. DEVIATIONS FROM THE NOMINAL THICKNESS WILL BE PERMITTED WHEN SUCH DEVIATIONS OCCUR DUE TO IRREGULARITIES IN THE EXISTING SURFACE OR BASE ON WHICH THE HOT-MIX ASPHALT MIXTURE IS PLACED.

2) FACTORS USED FOR ESTIMATING PLAN QUANTITIES ARE AS FOLLOWS AND SHALL NOT BE USED FOR THE BASIS OF FINAL QUANTITIES:

ALL HOT-MIX ASPHALT:	2.016 TONS / CU YD
HOT-MIX ASPHALT MATERIALS ON PAVEMENT:	0.09 GAL / SQ YD
AGGREGATE (PRIME COAT):	0.0015 TONS / SQ YD
ALL AGGREGATE:	2.05 TONS / CU YD
RIP RAP:	1.50 TONS / CU YD

3) IN ADDITION TO THE REQUIREMENTS OF ARTICLE 107.16 THE CONTRACTOR SHALL PROTECT THE SURFACE OF ALL BRIDGE DECK AND BRIDGE APPROACH PAVEMENTS IN A MANNER SATISFACTORY TO THE ENGINEER BEFORE ANY EQUIPMENT IS ALLOWED TO CROSS THE STRUCTURES. PROTECTION SHALL BE PROVIDED FOR ALL EQUIPMENT AS DEFINED IN ARTICLE 107.17 REGARDLESS IF TRACK MOUNTED OR WHEELED.

4) ALL OBSTRUCTIONS WHICH ARE WITHIN THE CLEAR ZONE SHOWN ON THE TYPICAL SECTION, AND ARE NOT SHIELDED BY THE PROPOSED GUARDRAIL, SHALL BE REMOVED WITHIN PROJECT LIMITS. TYPICAL OBSTRUCTIONS ARE HEADWALLS, FOUNDATIONS, ETC. WHICH PROJECT 4 INCHES OR MORE ABOVE THE GROUND LINE; AND TREES WHICH WILL MATURE TO A DIAMETER OF 100 mm (4 IN) OR GREATER.

5) TREES SHALL BE PRESERVED THROUGHOUT THIS SECTION AS SHOWN ON THE PLANS AND AS DIRECTED BY THE ENGINEER. GENERALLY, TREES OUTSIDE THE CLEAR ZONE, AND WHICH DO NOT INTERFERE WITH CONSTRUCTION, SHALL NOT BE DISTURBED.

6) PRIOR TO THE PLACEMENT OF THE FINAL PAVEMENT MARKINGS, THE RESIDENT ENGINEER SHOULD CONTACT THE BUREAU OF OPERATIONS AND ARRANGE FOR INSPECTION AND APPROVAL OF THE PAVEMENT MARKING LAYOUT.

7) ATTAINMENT OF PROPER CROWN SHALL BE FULLY ACCOMPLISHED WITH THE HOT-MIX ASPHALT BINDER COURSE.

8) IF SO DIRECTED BY THE ENGINEER, DITCHES ADJACENT TO EMBANKMENTS SHALL BE CONSTRUCTED PRIOR TO STARTING THE CONSTRUCTION OF THE EMBANKMENT FILL.

9) THE ALGEBRAIC DIFFERNECE BETWEEN THE PAVEMENT AND SHOULDER SLOPES SHALL NOT EXCEED 8%. THE SHOULDER ON THE OUTSIDE OF SUPERELEVATED CURVES SHALL BE FLATTENED ACCORDINGLY.

10) THE ONLY TEMPORARY EASEMENT THAT MAY BE USED BY THE CONTRACTOR IS THE TEMPORARY EASEMENT SHOWN ON THE PLAN/PROFILE SHEETS (SHEETS 13-15) AND THE ROW SHEETS (SHEETS 21, 22).

11) THE REMOVAL OF EXISTING ENTRANCE PIPE CULVERTS ENCASED IN CONCRETE WILL BE CONSIDERED INCLUDED IN THE OTHER ITEMS OF CONSTRUCTION IF ONLY THE ENDS OF THE CULVERT (2 FT OR LESS) ARE ENCASED. IF MORE THAN 2FT AT THE ENDS OF THE CULVERT ARE ENCASED IN CONCRETE, THE REMOVAL WILL BE PAID FOR ACCORDING TO ARTICLE 109.04.

12) THE ENGINEER SHALL BE THE SOLE JUDGE AS TO THE FINAL PLACEMENT OF ALL PROPOSED TREE PLANTINGS.

13) TO MINIMIZE THE TIME THAT THE EMBANKMENT IS EXPOSED, THE REMOVAL AND DISPOSAL OF UNSUITABLE MATERIAL FROM STA 1116+00 TO STA 1117+75 SHALL BE COMPLETED IN ONE CONTINUOUS OPERATIONS WITH NO LENGTHY PERIODS OF SHUTDOWN ALLOWED.

14) COMMITMENTS: AS AGREED TO WITH THE PROPERTY OWNER AND AS DETAILED IN THE PLANS, "A NEW ENTRANCE AND CULVERT WILL BE CONSTRUCTED AT ± STA. 1127+50 RT. AND A NEW CULVERT WILL BE CONSTRUCTED UNDER THE EXISTING ENTRANCE AT ± STA. 1130+00 RT. THE SIDE DITCH WOULD ALSO BE GRADED/SHAPED FROM STA. 1127+00 RT. TO STA. 1131+00 RT.

MIXTURE REQUIREMENTS

LOCATION(S):	HOT-MIX ASPHALT SURFACE COURSE, IL 4
MIXTURE USES(S):	POLYMERIZED HOT-MIX ASPHALT SURFACE COURSE, MIX C, N90
AC/PG:	SBS PG76-22
RAP% (MAX):	0
DESIGN AIR VOIDS:	4.0%, 90 GYRATION DESIGN
MIXTURE COMPOSITION: (GRADATION MIXTURE)	IL-9.5 MM OR 12.5 MM
FRICTION AGGREGATE:	C SURFACE

LOCATION(S):	HOT-MIX ASPHALT SHOULDERS, IL 4 & DETOUR
MIXTURE USES(S):	HOT-MIX ASPHALT SHOULDER, N30
AC/PG:	PG58-22
RAP% (MAX):	50
DESIGN AIR VOIDS:	2.0%, 30 GYRATION DESIGN
MIXTURE COMPOSITION: (GRADATION MIXTURE)	HMA SHOULDERS
FRICTION AGGREGATE:	NONE

LOCATION(S):	HOT-MIX ASPHALT BINDER COURSE (TOP LIFT), IL 4
MIXTURE USES(S):	POLYMERIZED HOT-MIX ASPHALT BINDER COURSE, N90, IL-19.0
AC/PG:	SBS PG76-22
RAP% (MAX):	0
DESIGN AIR VOIDS:	4.0%, 90 GYRATION DESIGN
MIXTURE COMPOSITION: (GRADATION MIXTURE)	IL-19.0
FRICTION AGGREGATE:	NONE

LOCATION(S):	HOT-MIX ASPHALT BINDER COURSE (LOWER LIFTS), IL 4
MIXTURE USES(S):	HOT-MIX ASPHALT BINDER COURSE, N90, IL-19.0
AC/PG:	PG64-22
RAP% (MAX):	10
DESIGN AIR VOIDS:	4.0%, 90 GYRATION DESIGN
MIXTURE COMPOSITION: (GRADATION MIXTURE)	IL-19.0
FRICTION AGGREGATE:	NONE

LOCATION(S):	LEVELING BINDER, HMA SURFACE, DETOUR
MIXTURE USES(S):	LEVELING BINDER (MACHINE METHOD), N90
AC/PG:	PG64-22
RAP% (MAX):	10%
DESIGN AIR VOIDS:	4.0%, 90 GYRATION DESIGN
MIXTURE COMPOSITION: (GRADATION MIXTURE)	IL-9.5 MM OR 12.5 MM
FRICTION AGGREGATE:	C SURFACE

STANDARDS

000001-06	STANDARD SYMBOLS, ABBREVIATIONS, AND PATTERNS
280001-06	TEMPORARY EROSION CONTROL SYSTEMS
420001-07	PAVEMENT JOINTS
420401-08	BRIDGE APPROACH PAVEMENT CONNECTOR
482001-02	HMA SHOULDER ADJACENT TO FLEXIBLE PAVEMENT
482006-03	HMA SHOULDER ADJACENT TO RIGID PAVEMENT
515001-03	NAME PLATES FOR BRIDGES
542401-01	METAL END SECTIONS FOR CULVERTS
601101-01	CONCRETE HEADWALL FOR PIPE DRAIN
630001-10	STEEL PLATE BEAM GUARDRAIL
630201-06	PCC/HMA STABILIZATION AT STEEL PLATE BEAM GUARDRAIL
630301-05	SHOULDER WIDENING FOR TYPE 1 (SPECIAL) GUARDRAIL TERMINALS
631031-10	TRAFFIC BARRIER TERMINAL, TYPE 6
635006-03	REFLECTOR AND TERMINAL MARKER REPLACEMENT
635011-02	REFLECTOR MARKER AND MOUNTING DETAILS
666001-01	RIGHT OF WAY MARKERS
701001-02	OFF-RD OPERATIONS, 2L, 2W, MORE THAN 4.5m (15') AWAY
701006-03	OFF-RD OPERATIONS, 2L, 2W, 4.5m (15') TO 600mm (24") FROM PVT. EDGE
701011-02	OFF RD MOVING OPERATIONS, 2L, 2W, DAY ONLY
701201-04	LANE CLOSURE, 2L, 2W, DAY ONLY FOR SPEEDS > 45 MPH
701311-03	LANE CLOSURE 2L, 2W MOVING OPERATIONS - DAY ONLY
701326-04	LANE CLOSURE, 2L, 2W, PAVEMENT WIDENING, FOR SPEEDS > 45 MPH
701901-02	TRAFFIC CONTROL DEVICES
780001-03	TYPICAL PAVEMENT MARKINGS
BLR 21-9	TYP. APP. OF TRAFFIC CONTROL DEVICES FOR CONSTR. ON RURAL LOCAL HIGHWAYS.

Prepared By: Joe Dan Rivers
DISTRICT STUDIES & PLANS ENGINEER

Examined By: James Travis Emery
DISTRICT LAND ACQUISITION ENGINEER

Examined By: Carrie Nelson
DISTRICT PROGRAM DEVELOPMENT ENGINEER

Examined By: Neil Nelly
DISTRICT OPERATIONS ENGINEER

Examined By: [illegible]
DISTRICT CONSTRUCTION ENGINEER

Examined By: Bruce W. Robbs
DISTRICT MATERIALS ENGINEER

Approved By: Gary Quisenberry
DEPUTY DIRECTOR OF HIGHWAYS, REGION 5 ENGINEER

Oct 18th 2011
DATE

FILE NAME = c:\pw_work\pwidot\halsteadtw\dms49726\78049-sht01.dgn

USER NAME = halsteadtw	DESIGNED -	REVISED -	
	DRAWN -	REVISED -	
PLOT SCALE = 50.0000 ' / in.	CHECKED -	REVISED -	
PLOT DATE = 10/14/2011	DATE -	REVISED -	

STATE OF ILLINOIS
DEPARTMENT OF TRANSPORTATION

MIX REQUIREMENTS, GENERAL NOTES, STANDARDS

SCALE: | SHEET NO. OF SHEETS | STA. TO STA.

F.A.P. RTE.	SECTION	COUNTY	TOTAL SHEETS	SHEET NO.
686	114B-1	JACKSON	114	2

CONTRACT NO. 78049

ILLINOIS FED. AID PROJECT

SUMMARY OF QUANTITIES

RURAL - JACKSON COUNTY
HBP FUNDING
80% FEDERAL; 20% STATE
CONSTRUCTION TYPE CODE 0011
SN 039-0074

	CODE NUMBER	ITEM DESCRIPTION	UNIT	QUANTITY
	20100110	TREE REMOVAL (6 TO 15 UNITS DIAMETER)	UNIT	544
	20100210	TREE REMOVAL (OVER 15 UNITS DIAMETER)	UNIT	221
	20200100	EARTH EXCAVATION	CU YD	651
	20201200	REMOVAL AND DISPOSAL OF UNSUITABLE MATERIAL	CU YD	1500
	20300100	CHANNEL EXCAVATION	CU YD	1950
	20400800	FURNISHED EXCAVATION	CU YD	6810
*	25000200	SEEDING, CLASS 2	ACRE	2.2
*	25000350	SEEDING, CLASS 7	ACRE	2.2
*	25000400	NITROGEN FERTILIZER NUTRIENT	POUND	282
*	25000500	PHOSPHORUS FERTILIZER NUTRIENT	POUND	198
*	25000600	POTASSIUM FERTILIZER NUTRIENT	POUND	198
*	25000700	AGRICULTURAL GROUND LIMESTONE	TON	4.4
	25100115	MULCH, METHOD 2	ACRE	4.4
	25100630	EROSION CONTROL BLANKET	SQ YD	3455
	28000250	TEMPORARY EROSION CONTROL SEEDING	POUND	420
	28000305	TEMPORARY DITCH CHECKS	FOOT	216
	28000400	PERIMETER EROSION BARRIER	FOOT	3625
	28000500	INLET AND PIPE PROTECTION	EACH	3
	28100107	STONE RIPRAP, CLASS A4	SQ YD	1584
	28200200	FILTER FABRIC	SQ YD	1584
	31100100	SUBBASE GRANULAR MATERIAL, TYPE A	TON	4213
	40200100	AGGREGATE SURFACE COURSE, TYPE A	TON	452
	40600100	BITUMINOUS MATERIALS (PRIME COAT)	GALLON	12063
	40600645	LEVELING BINDER (MACHINE METHOD), N90	TON	1731
	40600982	HOT-MIX ASPHALT SURFACE REMOVAL - BUTT JOINT	SQ YD	1023
	40603090	HOT - MIX ASPHALT BINDER COURSE, IL - 19.0, N90	TON	5211
	40603240	POLYMERIZED HOT - MIX ASPHALT BINDER COURSE, IL - 19.0, N90	TON	476
	40603320	HOT - MIX ASPHALT SURFACE COURSE, MIX "C", N90	TON	5018
	40603520	POLYMERIZED HOT - MIX ASPHALT SURFACE COURSE, MIX "C", N90	TON	396
	44000100	PAVEMENT REMOVAL	SQ YD	219
	44000400	GUTTER REMOVAL	FOOT	551
	44004250	PAVED SHOULDER REMOVAL	SQ YD	298
	48100100	AGGREGATE SHOULDERS, TYPE A	TON	391
	48203029	HOT - MIX ASPHALT SHOULDERS, 8"	SQ YD	1340
	48203100	HOT-MIX ASPHALT SHOULDERS	TON	1894
	50100100	REMOVAL OF EXISTING STRUCTURES	EACH	1
	50200100	STRUCTURE EXCAVATION	CU YD	372
	50200300	COFFERDAM EXCAVATION	CU YD	1386

RURAL - JACKSON COUNTY
HBP FUNDING
80% FEDERAL; 20% STATE
CONSTRUCTION TYPE CODE 0011
SN 039-0074

	CODE NUMBER	ITEM DESCRIPTION	UNIT	QUANTITY
	50201121	COFFERDAM (TYPE 2) (LOCATION-1)	EACH	1
	50201122	COFFERDAM (TYPE 2) (LOCATION-2)	EACH	1
	50300100	FLOOR DRAINS	EACH	52
	50300225	CONCRETE STRUCTURES	CU YD	634.1
	50300255	CONCRETE SUPERSTRUCTURE	CU YD	617.3
	50300260	BRIDGE DECK GROOVING	SQ YD	1688
	50300265	SEAL COAT CONCRETE	CU YD	462
	50300280	CONCRETE ENCASEMENT	CU YD	12
	50300300	PROTECTIVE COAT	SQ YD	2200
	50500305	ERECTING STRUCTURAL STEEL	L SUM	1
	50500505	STUD SHEAR CONNECTORS	EACH	4104
	50800205	REINFORCEMENT BARS, EPOXY COATED	POUND	291,770
	50800515	BAR SPLICERS	EACH	84
	51201800	FURNISHING STEEL PILES HP 14 x 73	FOOT	2590
	51202305	DRIVING PILES	FOOT	2590
	51203800	TEST PILE STEEL HP 14 x 73	EACH	4
	51204650	PILE SHOES	EACH	46
	51500100	NAME PLATES	EACH	1
	52000110	PREFORMED JOINT STRIP SEAL	FOOT	87.5
	52100220	ERECTING ELASTOMERIC BEARING ASSEMBLY, TYPE II	EACH	12
	52100510	ANCHOR BOLTS, 3/4"	EACH	24
	52100530	ANCHOR BOLTS, 1 1/4"	EACH	24
	54248510	CONCRETE COLLAR	CU YD	1
	54215559	METAL END SECTION 24"	EACH	6
	542D0229	PIPE CULVERTS, CLASS D, TYPE 1 24"	FOOT	200
	58700300	CONCRETE SEALER	SQ FT	1280
	59100100	GEOCOMPOSITE WALL DRAIN	SQ YD	78
*	63000001	STEEL PLATE BEAM GUARDRAIL, TYPE A, 6 FOOT POSTS	FOOT	512.5
*	63100085	TRAFFIC BARRIER TERMINAL, TYPE 6	EACH	4
*	63100167	TRAFFIC BARRIER TERMINAL, TYPE 1 (SPECIAL) TANGENT	EACH	2
*	63100169	TRAFFIC BARRIER TERMINAL, TYPE 1 (SPECIAL) FLARED	EACH	2
	63200310	GUARDRAIL REMOVAL	FOOT	530
	66600105	FURNISHING AND ERECTING RIGHT OF WAY MARKERS	EACH	16
	67000400	ENGINEER'S FIELD OFFICE, TYPE A	CAL MO	12
	67100100	MOBILIZATION	L SUM	1

*SPECIALTY ITEM

USER NAME = porterwc	DESIGNED -	REVISED -
	DRAWN -	REVISED -
PLOT SCALE = 50.0000 ' / in.	CHECKED -	REVISED -
PLOT DATE = 11/3/2011	DATE -	REVISED -

STATE OF ILLINOIS
DEPARTMENT OF TRANSPORTATION

SUMMARY OF QUANTITIES

SCALE: SHEET NO. OF SHEETS STA. TO STA.

F.A.P. RTE.	SECTION	COUNTY	TOTAL SHEETS	SHEET NO.
686	114B-1	JACKSON	114	3

CONTRACT NO. 78049
ILLINOIS FED. AID PROJECT

FILE NAME = c:\pw_work\pw01\porterwc\ds49708\78049-sht-sum.dgn

SUMMARY OF QUANTITIES

RURAL - JACKSON COUNTY
HBP FUNDING
80% FEDERAL; 20% STATE
CONSTRUCTION TYPE CODE 0011
SN 039-0074

	CODE NUMBER	ITEM DESCRIPTION	UNIT	QUANTITY
	70100450	TRAFFIC CONTROL AND PROTECTION, STANDARD 701201	L SUM	1
	70100500	TRAFFIC CONTROL AND PROTECTION, STANDARD 701326	L SUM	1
	70101830	TRAFFIC CONTROL AND PROTECTION, STANDARD BLR 21	L SUM	1
	70103815	TRAFFIC CONTROL SURVEILLENCE	CAL DA	3
	70106800	CHANGEABLE MESSAGE SIGN	CAL MO	1
	70300100	SHORT - TERM PAVEMENT MARKING	FOOT	4957
	70300220	TEMPORARY PAVEMENT MARKING - LINE 4"	FOOT	110986
	70301000	WORK ZONE PAVEMENT MARKING REMOVAL	SQ FT	2755
*	78001110	PAINT PAVEMENT MARKING - LINE 4"	FOOT	110986
*	78100100	RAISED REFLECTIVE PAVEMENT MARKER	EACH	25
*	78200410	GUARDRAIL MARKERS, TYPE A	EACH	14
*	78200520	BARRIER WALL MARKERS, TYPE B	EACH	12
*	78201000	TERMINAL MARKER - DIRECT APPLIED	EACH	4
*	A2002714	TREE, CARYA OVATA (SHAGBARK HICKORY), 1-3/4" CALIPER, BALLED AND BURLAPPED	EACH	18
*	A2006514	TREE, QUERCUS BICOLOR (SWAMP WHITE OAK), 1-3/4" CALIPER, BALLED AND BURLAPPED	EACH	15
*	A2006914	TREE, QUERCUS PALUSTRIS (PIN OAK), 1-3/4" CALIPER, BALLED AND BURLAPPED	EACH	12
*	A2016814	TREE, QUERCUS SHUMARDII (SHUMARD RED OAK), 1-3/4" CALIPER, BALLED AND BURLAPPED	EACH	15
	X2020110	GRADING AND SHAPING SHOULDERS	UNIT	510
	X2070304	POROUS GRANULAR EMBANKMENT, SPECIAL	CU YD	174
	X542A497	PIPE CULVERTS, CLASS A, TYPE 1 EQUIVALENT ROUND-SIZE 42" TEMPORARY	FOOT	11
	Z0001900	ASBESTOS BEARING PAD REMOVAL	EACH	132
	Z0018002	DRAINAGE SCUPPERS, DS-11	EACH	2
	Z0046304	PIPE UNDERDRAINS FOR STRUCTURES 4"	FOOT	107
	Z0055905	TEMPORARY CONSTRUCTION FENCE	FOOT	1100
+	Z0076600	TRAINEES	HOUR	1000

+ 0042
* SPECIALTY ITEM

USER NAME = porterwc	DESIGNED -	REVISED -	STATE OF ILLINOIS DEPARTMENT OF TRANSPORTATION
	DRAWN -	REVISED -	
PLOT SCALE = 50.0000 ' / in.	CHECKED -	REVISED -	
PLOT DATE = 11/3/2011	DATE -	REVISED -	

SUMMARY OF QUANTITIES

SCALE: SHEET NO. OF SHEETS STA. TO STA.

F.A.P. RTE.	SECTION	COUNTY	TOTAL SHEETS	SHEET NO.
686	114B-1	JACKSON	114	4

CONTRACT NO. 78049

ILLINOIS FED. AID PROJECT

FILE NAME = c:\pw_work\pwidot\porterwc\dms41786\78049-sht-pln.dgn

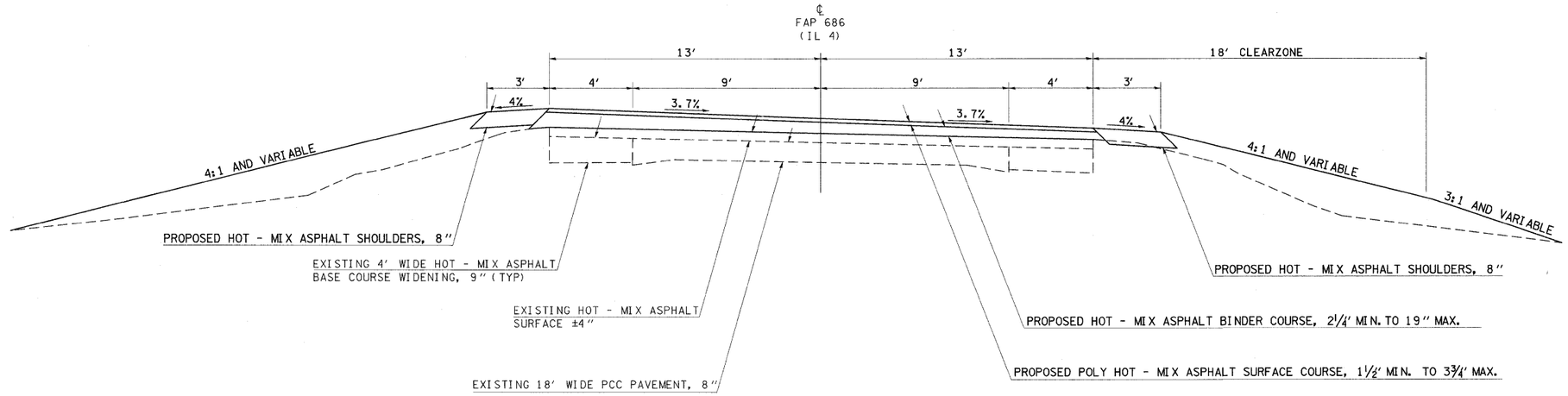

TYPICAL SECTION

TO BE USED:
STA. 1108+00 TO STA. 1111+50

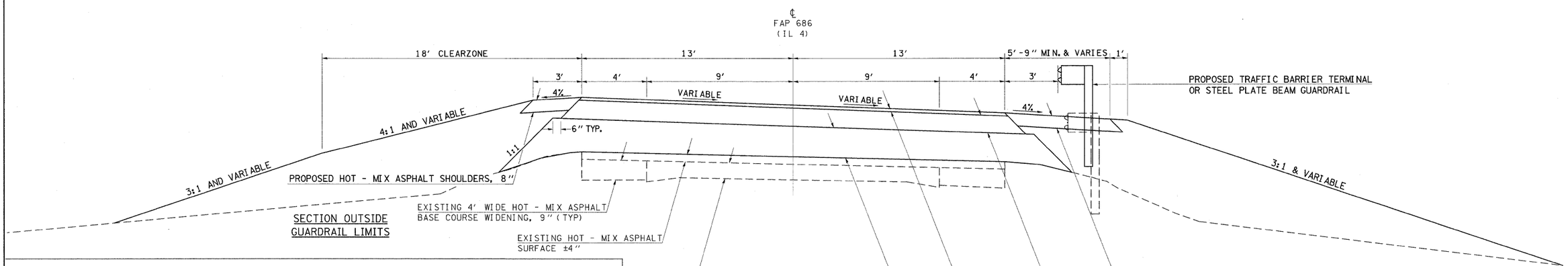

TYPICAL SECTION

TO BE USED:
STA. 1111+50 TO STA. 1116+00

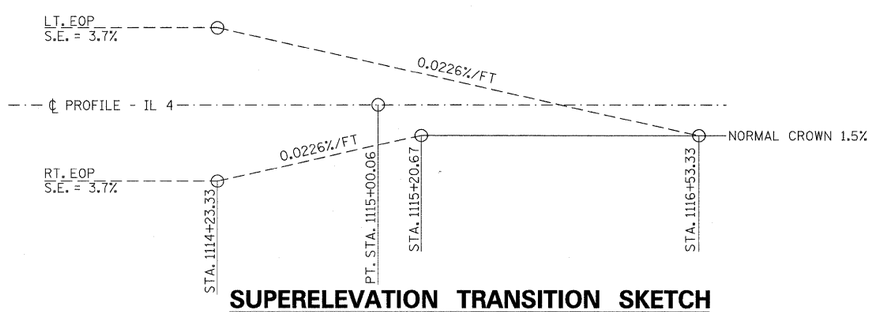

SUPERELEVATION TRANSITION SKETCH

USER NAME = halsteadtx	DESIGNED -	REVISED -
	DRAWN -	REVISED -
PLOT SCALE = 50.0000 ′ / in.	CHECKED -	REVISED -
PLOT DATE = 10/18/2011	DATE -	REVISED -

STATE OF ILLINOIS
DEPARTMENT OF TRANSPORTATION

TYPICAL SECTIONS IL RTE 4

SCALE: | SHEET NO. OF SHEETS | STA. TO STA.

F.A.P. RTE.	SECTION	COUNTY	TOTAL SHEETS	SHEET NO.
686	114B-1	JACKSON	114	5

CONTRACT NO. 78049

ILLINOIS | FED. AID PROJECT

FILE NAME = c:\pw_work\pwidot\halsteadtx\dms49788\78049-sht-plmdgn

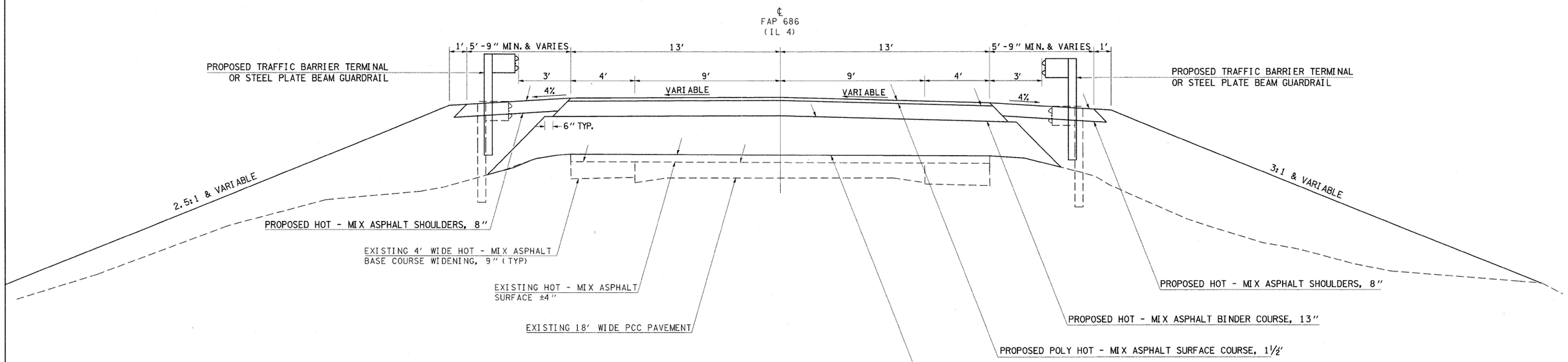

TYPICAL SECTION

TO BE USED:
STA. 1116+00 TO STA. 1117+42

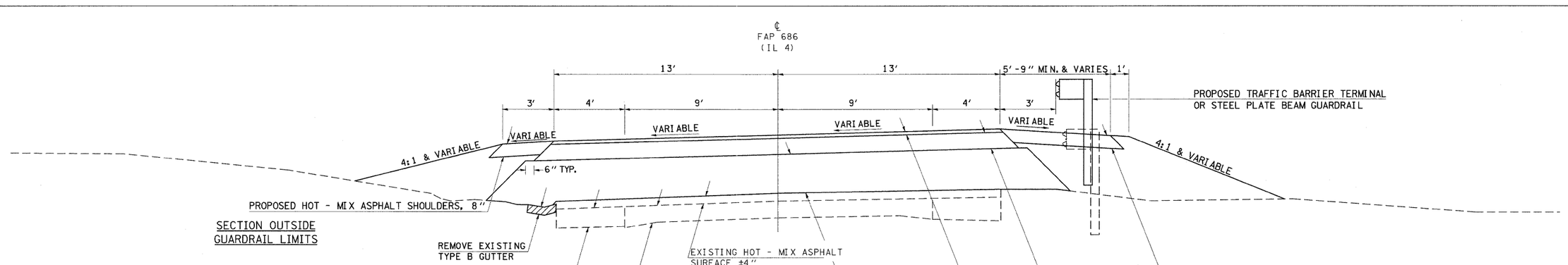

TYPICAL SECTION

TO BE USED:
STA. 1122+48 TO STA. 1124+38

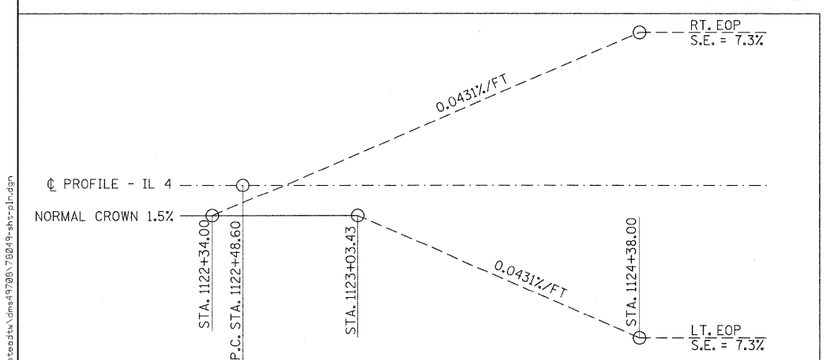

SUPERELEVATION TRANSITION SKETCH

USER NAME = holsteadtw	DESIGNED -	REVISED -	STATE OF ILLINOIS DEPARTMENT OF TRANSPORTATION	TYPICAL SECTIONS IL RTE 4	F.A.P. RTE.	SECTION	COUNTY	TOTAL SHEETS / SHEET NO.
	DRAWN -	REVISED -			686	114B-1	JACKSON	114 / 6
PLOT SCALE = 50.0000 ' / in.	CHECKED -	REVISED -					CONTRACT NO. 78049	
PLOT DATE = 10/18/2011	DATE -	REVISED -		SCALE: / SHEET NO. OF SHEETS / STA. TO STA.			ILLINOIS FED. AID PROJECT	

FILE NAME = c:\pw_work\pwidot\holsteadtw\dms49708\78049-sht-pln.dgn

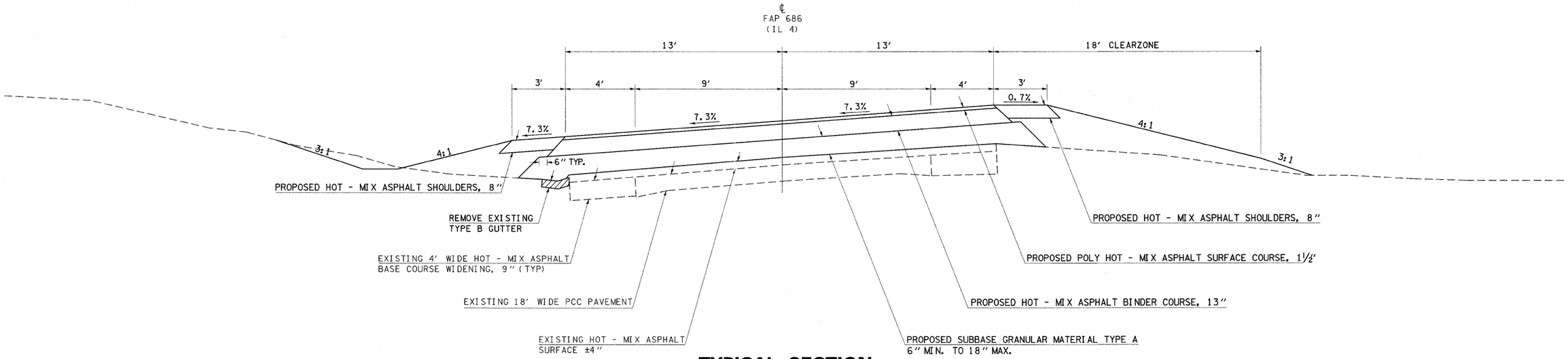

TYPICAL SECTION

TO BE USED:
STA. 1124+38 TO STA. 1125+50

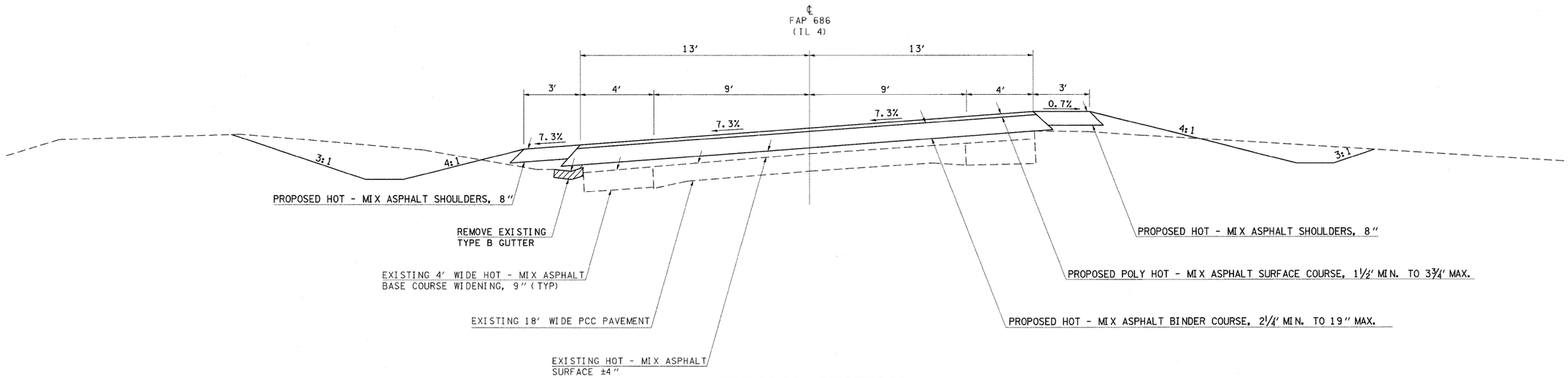

TYPICAL SECTION

TO BE USED:
STA. 1125+50 TO STA. 1127+45

FILE NAME = c:\pw_work\pwidot\halsteadtw\dms49708\78049-sht-pln.dgn

USER NAME = halsteadtw	DESIGNED -	REVISED -	STATE OF ILLINOIS DEPARTMENT OF TRANSPORTATION	TYPICAL SECTIONS IL RTE 4	F.A.P. RTE.	SECTION	COUNTY	TOTAL SHEETS	SHEET NO.
	DRAWN -	REVISED -			686	114B-1	JACKSON	114	7
PLOT SCALE = 50.0000 ' / in.	CHECKED -	REVISED -					CONTRACT NO. 78049		
PLOT DATE = 10/18/2011	DATE -	REVISED -		SCALE: SHEET NO. OF SHEETS STA. TO STA.		ILLINOIS FED. AID PROJECT			

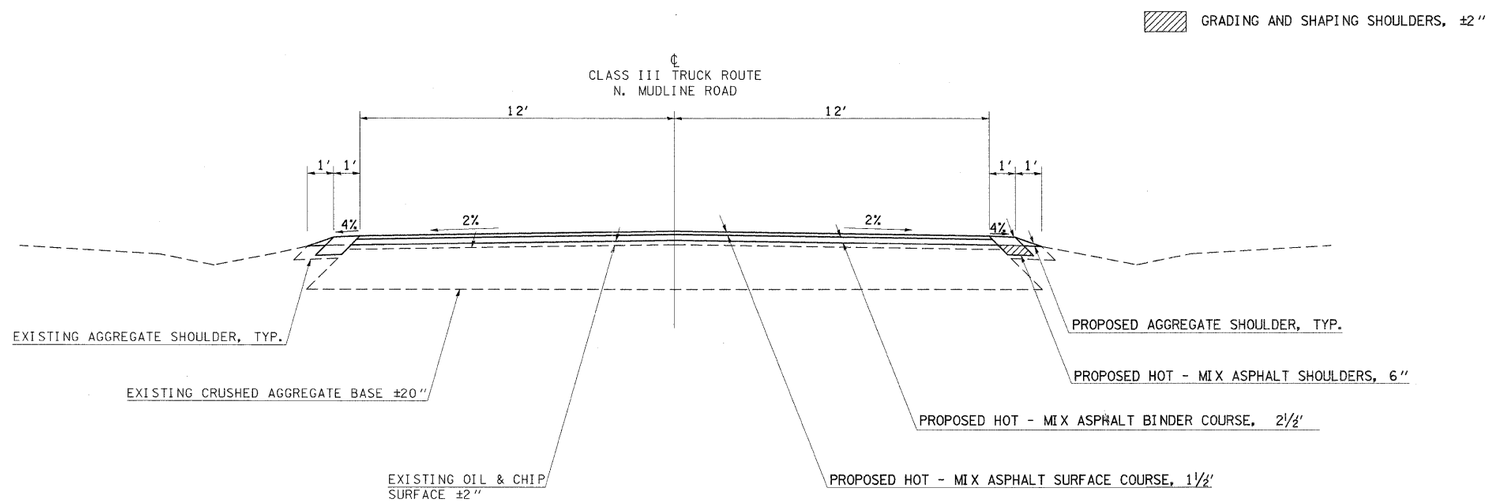

TYPICAL SECTION

TO BE USED:
MUDLINE RD. TRUCK ROUTE PORTION
APPROXIMATE LENGTH = 1.3 MILES

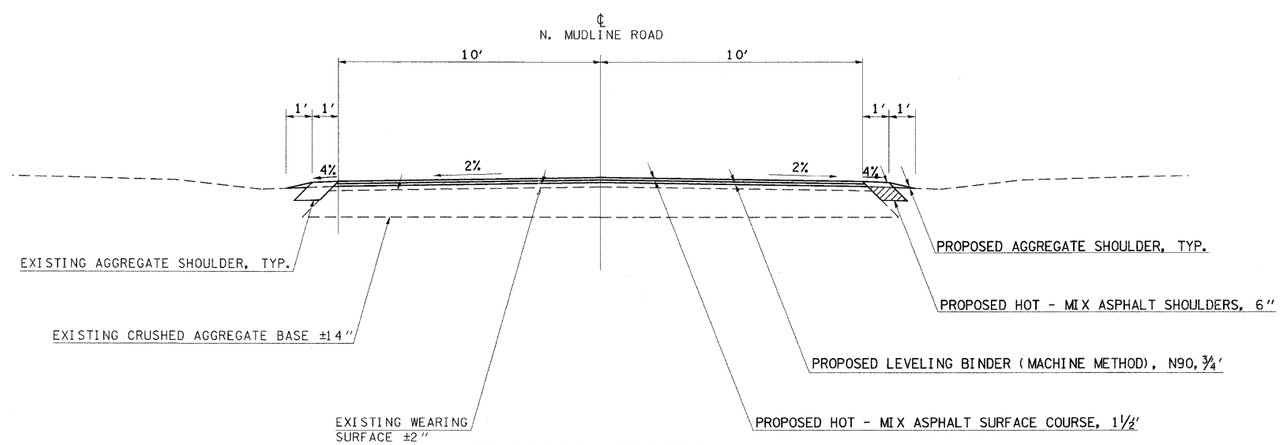

TYPICAL SECTION

TO BE USED:
MUDLINE RD. NON-TRUCK ROUTE PORTION
APPROXIMATE LENGTH = 0.3 MILES

FILE NAME = c:\pw_work\pwidot\porterwc\dms49708\78049-sht-plnu.dgn

USER NAME = porterwc	DESIGNED -	REVISED -	
	DRAWN -	REVISED -	
PLOT SCALE = 50.0000 ′ / in.	CHECKED -	REVISED -	
PLOT DATE = 11/3/2011	DATE -	REVISED -	

STATE OF ILLINOIS
DEPARTMENT OF TRANSPORTATION

TYPICAL SECTIONS DETOUR RD

SCALE: | SHEET NO. OF SHEETS | STA. TO STA.

F.A.P. RTE.	SECTION	COUNTY	TOTAL SHEETS	SHEET NO.
686	114B-1	JACKSON	114	8
		CONTRACT NO. 78049		
	ILLINOIS	FED. AID PROJECT		

GRADING AND SHAPING SHOULDERS, ±3¾′

* MATCH EXISTING SLOPES FOR TRANSITIONS AND S.E.
℄ STRUCTURE 039-3182 @ STA 14+50.04

TRANSITION 1
STA 7+43.08 TO STA 8+68.08
S.E. = .023′/′
STA 11+55.32 TO STA 12+80.32

TRANSITION 2
STA 29+69.50 TO STA 30+94.50
S.E. = .045′/′
STA 32+18.12 TO STA 33+43.12

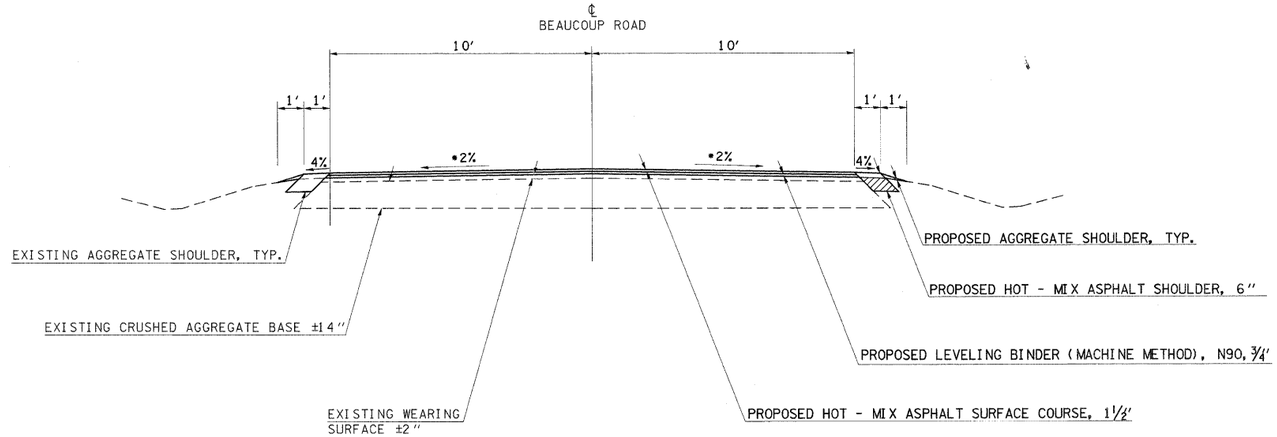

TYPICAL SECTION

TO BE USED:
BEAUCOUP RD.
APPROXIMATE LENGTH = 3.2 MILES
* EXCEPT WHERE NOTED

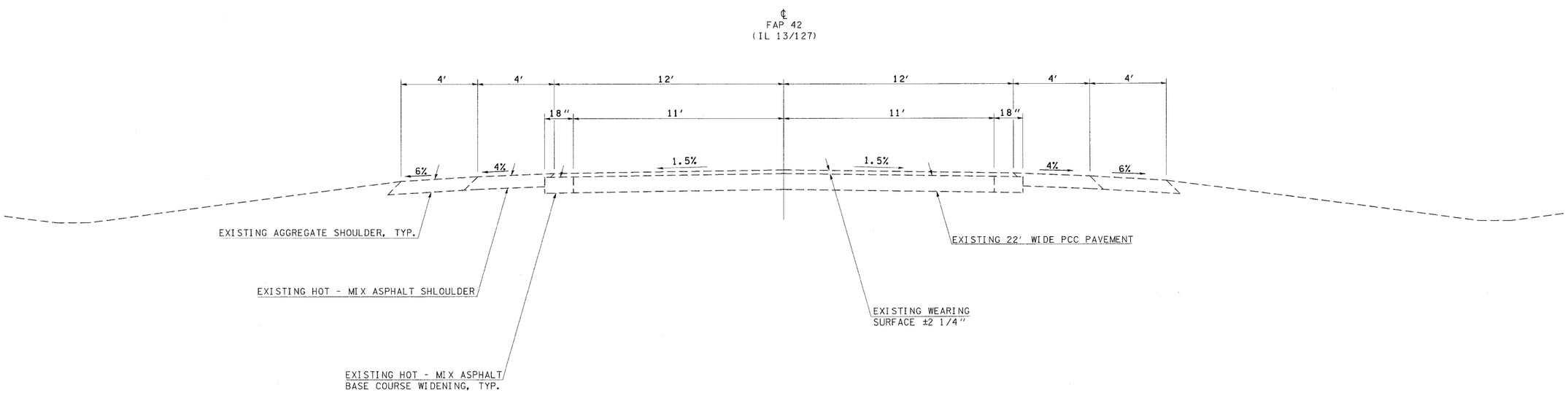

TYPICAL SECTION

TO BE USED:
IL 13/127

USER NAME = porterwc	DESIGNED -	REVISED -	
	DRAWN -	REVISED -	
PLOT SCALE = 50.0000 ′/ in.	CHECKED -	REVISED -	
PLOT DATE = 11/3/2011	DATE -	REVISED -	

STATE OF ILLINOIS
DEPARTMENT OF TRANSPORTATION

TYPICAL SECTIONS DETOUR RD

SCALE: | SHEET NO. OF SHEETS | STA. TO STA.

F.A.P. RTE.	SECTION	COUNTY	TOTAL SHEETS	SHEET NO.
686	114B-1	JACKSON	114	9
		CONTRACT NO. 78049		
	ILLINOIS	FED. AID PROJECT		

FILE NAME = c:\pw_work\pwidot\porterwc\dms41788\78049-sht-pln.dgn

TREE REMOVAL SCHEDULE

LOCATION IL 4	TREE REMOVAL 6 TO 15 UNITS DIAMETER	TREE REMOVAL OVER 15 UNITS DIAMETER
	UNIT	UNIT
NORTHWEST QUADRANT		
STA. 1113+53 ,50' LT		25.5
STA. 1113+61 ,48' LT	15	
STA. 1113+66 ,51' LT	7	
STA. 1113+70 ,51' LT	12.5	
STA. 1113+89 ,51' LT	7.5	
STA. 1113+96 ,40' LT	9	
STA. 1114+07 ,40' LT		17
STA. 1114+11 ,47' LT	5.25	
STA. 1114+17 ,51' LT	10.75	
STA. 1114+25 ,45' LT	7.25	
STA. 1114+29 ,46' LT	7.75	
STA. 1114+29 ,36' LT	9.5	
STA. 1114+34 ,45' LT	6	
STA. 1114+41 ,43' LT	10	
STA. 1114+42 ,43' LT	11.5	
STA. 1114+42 ,43' LT		15.5
STA. 1114+50 ,47' LT	8.5	
STA. 1114+50 ,50' LT	9.75	
STA. 1114+59 ,53' LT	11.75	
STA. 1114+63 ,47' LT	6.25	
STA. 1114+66 ,48' LT	9	
STA. 1114+71 ,48' LT	6	
STA. 1114+71 ,48' LT	7.5	
STA. 1114+79 ,41' LT	8.25	
STA. 1114+80 ,53' LT	13.5	
STA. 1114+82 ,53' LT		34.75
STA. 1114+85 ,50' LT	9.5	
STA. 1114+93 ,51' LT	6.5	
STA. 1115+10 ,43' LT	13.5	
STA. 1115+10 ,43' LT	13	
STA. 1115+10 ,43' LT	8.5	
STA. 1115+10 ,50' LT	8.5	
STA. 1115+13 ,52' LT	7.25	
STA. 1115+17 ,52' LT	9.5	
STA. 1115+21 ,41' LT	6	
STA. 1115+30 ,41' LT	8.5	
STA. 1115+36 ,47' LT	8.5	
STA. 1115+37 ,43' LT	9.5	
STA. 1115+45 ,45' LT	11.25	
STA. 1115+47 ,46' LT	11	
STA. 1115+50 ,45' LT	6	
STA. 1115+66 ,47' LT	6.5	
STA. 1115+67 ,50' LT	9.5	
STA. 1115+73 ,32' LT	8.75	
STA. 1115+82 ,36' LT	8	
STA. 1115+84 ,67' LT		37.75
STA. 1115+91 ,67' LT	6	
STA. 1115+94 ,64' LT	7.5	
STA. 1116+00 ,57' LT	9.75	
STA. 1116+07 ,57' LT	8.75	
STA. 1116+07 ,57' LT	7.5	
STA. 1117+43 ,51' LT	8.5	
STA. 1117+44 ,63' LT	8.25	
STA. 1117+43 ,67' LT	7.25	
STA. 1117+50 ,62' LT		16.5
STA. 1117+54 ,60' LT	9.5	
STA. 1117+66 ,63' LT	6.5	
STA. 1117+67 ,62' LT	7	
STA. 1117+68 ,62' LT	7	
STA. 1117+68 ,62' LT	7	
STA. 1117+35 ,70' LT	14	
NORTHEAST QUADRANT		
STA. 1126+41 ,35 ' LT		30
SOUTHWEST QUADRANT		
STA. 1113+50 ,57 ' RT	10	
STA. 1113+17 ,52 ' RT		18.5
STA. 1116+56 ,63 ' RT	14	
STA. 1116+58 ,67 ' RT	14	
STA. 1116+61 ,66 ' RT	7.25	
STA. 1116+63 ,66 ' RT	7.25	
SOUTHEAST QUADRANT		
STA. 1123+75 ,36' RT		25
STA. 1123+92 ,35' RT	7	
TOTALS	544	221

PROPOSED TREE SCHEDULE

LOCATION IL 4	A2002714 (SHAGBARK HICKORY)	A2006514 (SWAMP WHITE OAK)	A2006914 (PIN OAK)	A2016814 (SHUMARD RED OAK)
	EACH	EACH	EACH	EACH
NORTHWEST QUADRANT				
STA. 1112+00 ,52' LT		1		
STA. 1112+15 ,54' LT	1			
STA. 1112+30 ,46' LT				1
STA. 1112+45 ,60' LT			1	
STA. 1112+60 ,51' LT	1			
STA. 1112+75 ,46' LT			1	
STA. 1112+90 ,54' LT				1
STA. 1113+05 ,49' LT		1		
STA. 1113+20 ,51' LT	1			
STA. 1113+35 ,45' LT			1	
STA. 1113+50 ,48' LT				1
STA. 1113+65 ,44' LT	1			
STA. 1113+80 ,47' LT		1		
STA. 1113+95 ,44' LT	1			
STA. 1114+10 ,49' LT			1	
STA. 1114+25 ,43' LT	1			
STA. 1114+40 ,50' LT				1
STA. 1114+55 ,45' LT		1		
STA. 1114+70 ,49' LT	1			
STA. 1114+85 ,44' LT			1	
STA. 1115+00 ,55' LT	1			
STA. 1115+15 ,48' LT		1		
STA. 1115+30 ,54' LT				1
STA. 1115+45 ,44' LT			1	
STA. 1115+60 ,48' LT				1
STA. 1115+75 ,58' LT	1			
STA. 1115+90 ,52' LT		1		
STA. 1116+00 ,50' LT				1
SOUTHWEST QUADRANT				
STA. 1113+00 ,44' RT		1		
STA. 1113+15 ,48' RT			1	
STA. 1113+30 ,45' RT	1			
STA. 1113+45 ,52' RT				1
STA. 1113+60 ,44' RT		1		
STA. 1113+75 ,49' RT		1		
STA. 1113+90 ,44' RT	1			
STA. 1114+05 ,45' RT				1
STA. 1114+20 ,50' RT				1
STA. 1114+35 ,46' RT			1	
STA. 1114+50 ,45' RT		1		
STA. 1115+45 ,44' RT	1			
STA. 1115+60 ,46' RT	1			
STA. 1115+75 ,49' RT			1	
STA. 1115+90 ,45' RT				1
STA. 1116+05 ,48' RT		1		
STA. 1116+20 ,51' RT	1			
STA. 1116+35 ,44' RT		1		
STA. 1116+50 ,61' RT	1			
STA. 1116+65 ,54' RT		1		
STA. 1116+80 ,48' RT				1
STA. 1116+95 ,64' RT		1		
STA. 1117+10 ,56' RT				1
STA. 1117+25 ,62' RT	1			
STA. 1117+40 ,53' RT	1			
STA. 1117+55 ,65' RT			1	
STA. 1117+70 ,50' RT		1		
STA. 1117+70 ,70' RT				1
SOUTHEAST QUADRANT				
STA. 1123+95 ,45' RT			1	
STA. 1124+10 ,55' RT	1			
STA. 1124+25 ,45 RT				1
STA. 1124+50 ,43 RT			1	
TOTALS	18	15	12	15

USER NAME = halsteadtw	DESIGNED -	REVISED -	STATE OF ILLINOIS DEPARTMENT OF TRANSPORTATION
	DRAWN -	REVISED -	
PLOT SCALE = 50.0000 ' / in.	CHECKED -	REVISED -	
PLOT DATE = 10/18/2011	DATE -	REVISED -	

SCHEDULES OF QUANTITIES

SCALE: | SHEET NO. OF SHEETS | STA. TO STA.

F.A.P. RTE.	SECTION	COUNTY	TOTAL SHEETS	SHEET NO.
686	114B-1	JACKSON	114	10
		CONTRACT NO. 78049		
	ILLINOIS	FED. AID PROJECT		

FILE NAME = c:\pw_work\pwidot\halsteadtw\dms49708\78049-sht-pin.dgn

SHOULDER SCHEDULE

LOCATION IL 4	HOT MIX ASPHALT SHOULDERS, 8"
	SQ YD
NORTHWEST QUADRANT	
STA. 1108+00 LT TO STA. 1113+23 LT	175
STA. 1113+23 LT TO STA. 1117+43 LT	267
NORTHEAST QUADRANT	
STA. 1122+20 LT TO STA. 1122+63 LT	29
STA. 1122+63 LT TO STA. 1123+06 LT	34
STA. 1123+06 LT TO STA. 1123+12 LT	5
STA. 1123+12 LT TO STA. 1127+42 LT	152
SOUTHWEST QUADRANT	
STA. 1108+00 RT TO STA. 1115+02 RT	227
STA. 1115+02 RT TO STA. 1115+10 RT	5
STA. 1115+10 RT TO STA. 1115+66 RT	42
STA. 1115+66 RT TO STA. 1117+72 RT	115
SOUTHEAST QUADRANT	
STA. 1122+47 RT TO STA. 1123+28 RT	56
STA. 1123+28 RT TO STA. 1123+68 RT	36
STA. 1123+68 RT TO STA. 1124+50 RT	84
STA. 1124+50 RT TO STA. 1124+66 RT	11
STA. 1124+66 RT TO STA. 1127+74 RT	102
TOTALS	1340

TERMINALS AND GUARDRAIL

LOCATION STATION TO STATION	TRAFFIC BARRIER TERMINAL TYPE 1 SPECIAL TANGENT	TRAFFIC BARRIER TERMINAL TYPE 1 SPECIAL FLARED	TRAFFIC BARRIER TERMINAL TYPE 6	SPBGR TYPE A (6' POSTS)	GUARDRAIL REMOVAL	TERM. MARKER D. A.	GUARDRAIL MARKER TYPE A	BAR. WALL MARKER TYPE B
	EACH	EACH	EACH	FOOT	FOOT	EACH	EACH	EACH
LT STA 1122+63 TO 1123+06		1				1		
RT STA 1123+28 TO 1123+68		1				1		
LT STA 1113+31 TO 1113+87	1					1		
RT STA 1115+10 TO 1115+66	1					1		
LT STA 1113+87 TO 1116+99				312.5				
RT STA 1115+66 TO 1117+28				162.5				
RT STA 1122+90 TO 1123+28				37.5				
LT STA 1116+99 TO 1117+43			1					
RT STA 1117+28 TO 1117+72			1					
LT STA 1122+20 TO 1122+63			1					
RT STA 1122+47 TO 1122+90			1					
NW QUAD					113		6	
NE QUAD					201		2	
SW QUAD					90		4	
SE QUAD					126		2	
STA 1117+60 TO STA 1122+04								12
TOTALS	2	2	4	512.5	530	4	14	12

DETOUR SCHEDULE

LOCATION	EARTH EXCAVATION (CUTS)	*FURNISHED EXCAVATION (FILLS = 64)	SEEDING, CLASS 2	SEEDING, CLASS 7	NITROGEN FERTILIZER NUTRIENT	PHOSPHORUS FERITILIZER NUTRIENT	POTASSIUM FERITILIZER NUTRIENT	AGRI. GROUND LIMESTONE	EROSION CONTROL BLANKET	MULCH, METHOD 2	TEMP. DITCH CHECKS	BITUMINOUS MATERIALS (PRIMECOAT)	HMA SURFACE REMOVAL BUTT JOINT
	CU YD	CU YD	ACRE	ACRE	POUND	POUND	POUND	TON	SQ YD	ACRE	FOOT	GAL	SQ YD
END OF CONCRETE APRON AT MUDLINE - IL 4													80
MUDLINE RD (TRUCK ROUTE PORTION)												3295	
SN 039-3226													160
MUDLINE RD (NON-TRUCK ROUTE PORTION)												634	
SN 039-3182													134
BEAUCUOP RD												6759	
SN 039-3168													134
MUDLINE - BEAUCOUP RD INTERSECTION												129	67
IL 13/127 - BEAUCOUP RD INTERSECTION	68	13	0.1	0.1	9	9	9	0.2	210	0.2	48	70	274
REMOVAL @ IL 13/127 - BEAUCOUP RD	33												
TOTALS	101	13	0.1	0.1	9	9	9	0.2	210	0.2	48	10887	849

* CUTS - SHRINKAGE(25%) - FILLS = FURNISHED EXCAVATION
68 - 17 - 64 = -13

DETOUR SCHEDULE

LOCATION	HOT-MIX ASPHALT BINDER COURSE, IL-19.0, N90	HOT- MIX ASPHALT SURFACE	HOT- MIX ASPHALT LEVELING	PAVED SHOULDER REMOVAL	HOT- MIX ASPHALT SHOULDERS	AGGERATE SHOULDERS, TYPE A	PIPE CULVERTS, CLASS A, TYPE 1 EQUIVALENT ROUND SIZE 42" TEMPORARY	CONCRETE COLLAR	TC&P, STD. 701201	GRADING & SHAPING SHLDRS	PAINT PAVEMNENT MARKING LINE 4"	TEMPORARY PAVEMENT MARKING-LINE 4"	SHORT-TERM PAVEMENT MARKING
	TON	TON	TON	SQ YD	TON	TON	FOOT	CU YD	L SUM	UNITS	FOOT	FOOT	FOOT
MUDLINE RD (TRUCK ROUTE PORTION)	2785	1546			513	105				138	27456	27456	1283
MUDLINE RD (NON-TRUCK ROUTE PORTION)		298	149		119	25				32	6336	6336	295
BEAUCUOP RD		3174	1582		1262	257				340	67584	67584	3103
MUDLINE - BEAUCOUP RD INTERSECTION	19					1					888	888	41
IL 13/127 - BEAUCOUP RD INTERSECTION	181			46		3	11	1			654	654	30
REMOVAL @ IL 13/127 - BEAUCOUP RD				252									
TOTALS	2985	5018	1731	298	1894	391	11	1	1	510	102918	102918	4752

EARTHWORK SCHEDULE

LOCATION STATION TO STATION	REMOVAL AND DISPOSAL OF UNSUIT. MATERIAL	CHANNEL EXCAVATION (UNSUITABLE)	*EARTH EXCAVATION	SHRINKAGE FACTOR FOR EARTH EXCAVATION	EARTH EXCAVATION TO BE USED IN EMBANKMENT, ADJUSTED FOR SHRINKAGE	**EMBANKMENT	EARTHWORK BALANCE WASTE (+) OR SHORTAGE (-)	FURNISHED EXCAVATION
	CU YD	CU YD	CU YD	%	CU YD	CU YD	CU YD	CU YD
RT STA 1115+75 TO STA 1118+00	1500							
EAST ABUTMENT		450						
WEST ABUTMENT		1500						
STA 1107+50 TO STA 1118+00			70	25	53	6460	-6407	6407
STA 1122+20 TO STA 1132+00			480	25	360	750	-390	390
TOTALS	1500	1950	550	50	413	7210	-6797	6797

*CUTS FROM CROSS SECTIONS
**FILLS FROM CROSS SECTIONS

EROSION CONTROL SCHEDULE

LOCATION IL 4	PERIMETER EROSION BARRIER	EROSION CONTROL BLANKET	DITCH CHECKS	INLET & PIPE PROTECTION
	FOOT	SQ YD	FOOT	EACH
NORTHWEST QUADRANT				
LT STA. 1107+80 TO STA 1111+15	366			
LT STA. 1111+33 TO STA. 1112+88	159			
LT STA. 1113+01 TO STA. 1120+24	765			
LT STA. 11130+00 TO STA. 1117+43		1647		
SOUTHWEST QUADRANT				
RT STA. 1107+50 TO STA. 1111+11	344			
RT STA. 1111+24 TO STA. 1120+24	836			
RT. STA. 1160+00 TO STA. 1179+70		954		
NORTHEAST QUADRANT				
LT STA. 1120+64 TO STA. 1123+04	360			
LT STA. 1126+68 TO STA. 1128+19	153			
LT STA. 1122+77			12	
LT STA. 1122+59			12	
LT STA. 1122+37			12	
LT STA. 1123+87			12	
LT STA. 1124+32			12	
LT STA. 1125+19			12	
LT STA. 1125+79			12	
LT STA. 1126+17			12	
LT STA. 1126+50			12	
LT STA. 1126+77			12	
LT STA. 1127+25			12	
LT STA. 1127+73			12	
LT STA. 1127+91			12	
LT STA. 1121+42 TO STA. 1123+12		177		
LT STA. 1123+53 TO STA. 1127+58		181		
LT STA. 1123+58				1
SOUTHEAST QUADRANT				
RT STA. 1120+64 TO STA 1124+00	339			
RT STA. 1124+10 TO STA. 1127+24	301			
RT STA. 1128+80			12	
RT. STA. 1122+00 TO STA. 1123+00		146		
RT. STA. 1127+75 TO STA. 1129+69		140		
RT STA. 1127+77				1
RT STA. 1130+85				1
TOTALS	3625	3245	168	3

HOT-MIX ASPHALT SCHEDULE

LOCATION IL 4	POLYMERIZED HOT-MIX ASPHALT BINDER COURSE IL-19, N90	SUBBASE GRANULAR MATERIAL, TYPE A	HOT-MIX ASPHALT BINDER COURSE IL-19, N90	POLYMERIZED HOT-MIX ASPHALT SUFACE COURSE, MIX "C", N90	BITUMINOUS MATERIAL (PRIMECOAT)	AGGREGATE SURFACE COURSE, TYPE A
	TON	TON	TON	TON	GALLON	TON
STA 1111+50 TO STA 1117+63		2814				
STA 1122+27 TO STA 1125+50		1399				
STA 1108+78 TO STA 1117+45	316		1494	212		
STA 1122+48 TO STA 1126+87	160		732	107		
STA 1107+55 TO STA 1108+78				48		
STA 1126+87 TO STA 1127+72				29		
STA 1107+55 TO STA 1111+50					307	
STA 1111+50 TO STA 1117+45					465	
STA 1122+48 TO STA 1125+50					235	
STA 1125+50 TO STA 1127+75					169	
FE STA 1111+20						35
PE STA 1111+30						52
PE STA 1112+90						113
PE STA 1123+25						91
PE STA 1124+00						80
CE STA 1127+45						43
FE STA 1130+25						39
TOTALS	476	4213	2226	396	1176	452

PAVEMENT REMOVAL AND MISC. SCHEDULE

LOCATION IL 4	PAVEMENT REMOVAL	HMA SURFACE REMOVAL BUTT JOINT
	SQ YD	SQ YD
STA 1117+62 TO STA 1117+93	109	
STA 1122+07 TO STA 1122+38	110	
STA 1107+55 TO STA 1107+85		87
STA 1127+42 TO STA 1127+72		87
TOTALS	219	174

SEEDING SCHEDULE

LOCATION IL 4	SEEDING CLASS 2	SEEDING CLASS 7	NITROGEN (N)	PHOSPHORUS (P)	POTASSIUM (K)	MULCH METHOD 2	AGRICULTURAL GROUND LIMESTONE	TEMPORARY EROSION CONTROL SEEDING
	ACRE	ACRE	LBS	LBS	LBS	ACRE	TON	POUND
NW QUAD	0.8	0.8	104	72	72	1.6	1.6	160
SW QUAD	0.7	0.7	90	62	62	1.4	1.4	140
NE QUAD	0.2	0.2	27	19	19.0	0.4	0.4	40
SE QUAD	0.4	0.4	52	36	36.0	0.8	0.8	80
TOTALS	2.1	2.1	273	189	189	4.2	4.2	420

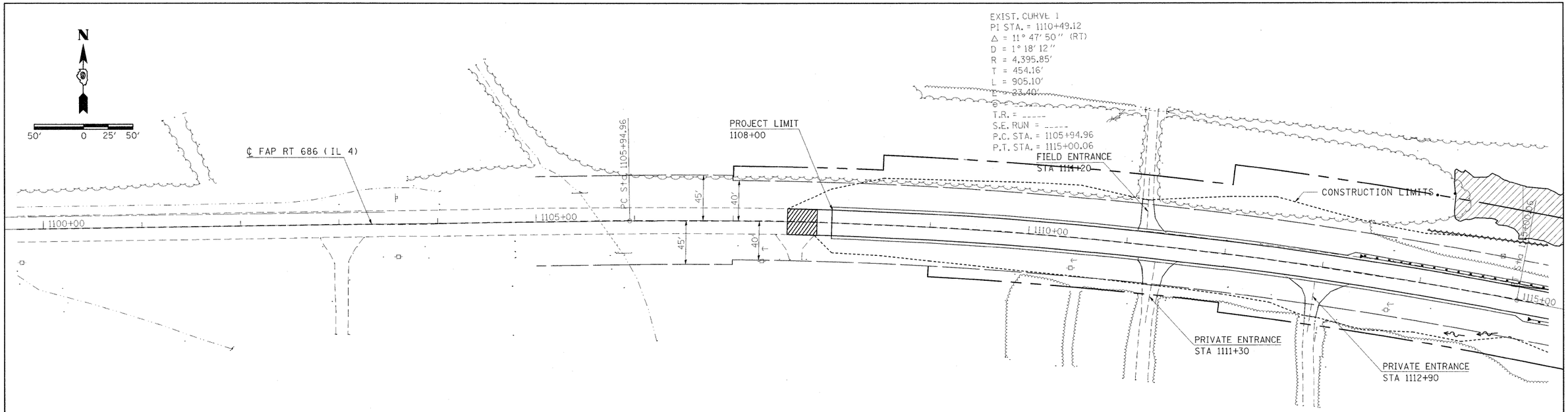

NOTES:

TEMP. ORANGE CONSTR. FENCING SHALL BE PLACED ADJACENT TO ALL WETLANDS.

WETLANDS

TEMP. ORANGE CONSTR. FENCING

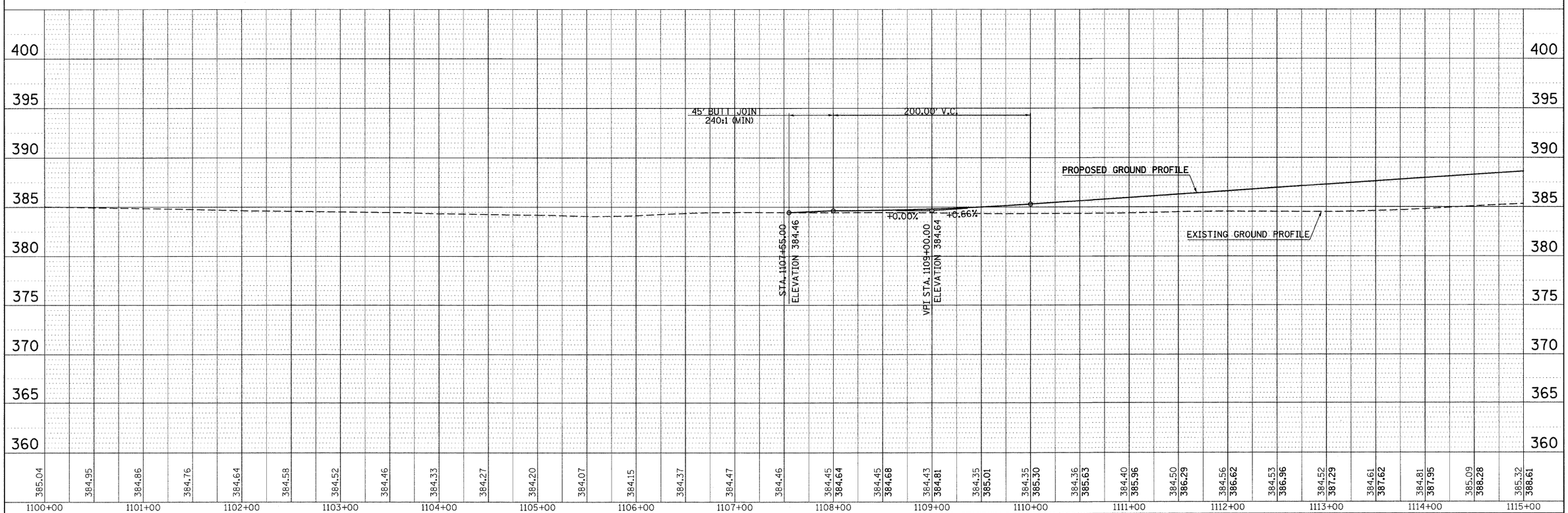

FILE NAME = c:\pw_work\pwidot\halsteadtw\dms49708\78049-sht-pln.dgn	USER NAME = halsteadtw	DESIGNED -	REVISED -
		DRAWN -	REVISED -
	PLOT SCALE = 50.0000 ' / in.	CHECKED -	REVISED -
	PLOT DATE = 10/18/2011	DATE -	REVISED -

STATE OF ILLINOIS
DEPARTMENT OF TRANSPORTATION

IL 4 OVER BEAUCOUP CREEK PLAN PROFILE

SCALE: 1"=50' | SHEET NO. OF SHEETS | STA. 1100+00.00 TO STA. 1115+00.00

F.A.P RTE.	SECTION	COUNTY	TOTAL SHEETS	SHEET NO.
686	114B-1	JACKSON	114	13

CONTRACT NO. 78049

FED. ROAD DIST. NO. | ILLINOIS | FED. AID PROJECT

PLAN — NOTE BOOK NO. — SURVEYED / PLOTTED / ALIGNMENT CHECKED / RT. OF WAY CHECKED / CADD FILE NAME — BY — DATE

PROFILE — NOTE BOOK NO. — SURVEYED / PLOTTED / GRADES CHECKED / B.M. NOTED / STRUCTURE NOTATIONS CHKD — BY — DATE

NOTES:

TEMP. ORANGE CONSTR. FENCING SHALL BE PLACED ADJACENT TO ALL WETLANDS.

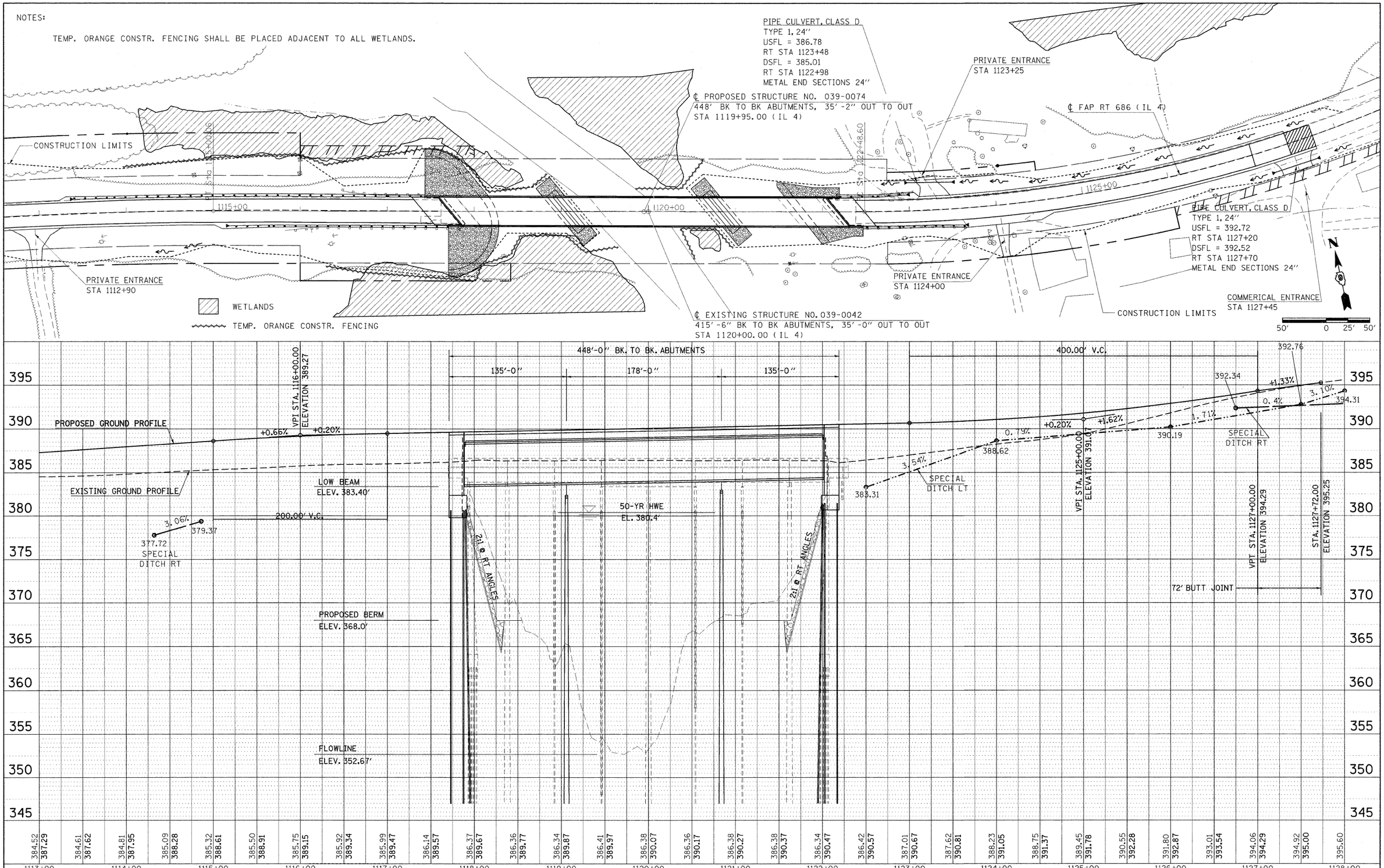

PLAN — NOTE BOOK NO. — SURVEYED — PLOTTED — ALIGNMENT CHECKED — RT. OF WAY CHECKED — CADD FILE NAME — BY — DATE

PROFILE — NOTE BOOK NO. — SURVEYED — PLOTTED — GRADES CHECKED — B.M. NOTED — STRUCTURE NOTATIONS CHKD — BY — DATE

FILE NAME = c:\projects/78049/78049-sht-pln.dgn	USER NAME = halsteadtw	DESIGNED -	REVISED -
c:\pw_work\pwidot\halsteadtw\dms49708\78049-sht-pln.dgn		DRAWN -	REVISED -
	PLOT SCALE = 50.0000 ' / in.	CHECKED -	REVISED -
	PLOT DATE = 10/18/2011	DATE -	REVISED -

STATE OF ILLINOIS
DEPARTMENT OF TRANSPORTATION

IL 4 OVER BEAUCOUP CREEK PLAN PROFILE

SCALE: 1"=50' | SHEET NO. OF SHEETS | STA. 1113+00.00 TO STA. 1128+00.00

F.A.P. RTE.	SECTION	COUNTY	TOTAL SHEETS	SHEET NO.
686	114B-1	JACKSON	114	14

CONTRACT NO. 78049

FED. ROAD DIST. NO. | ILLINOIS | FED. AID PROJECT

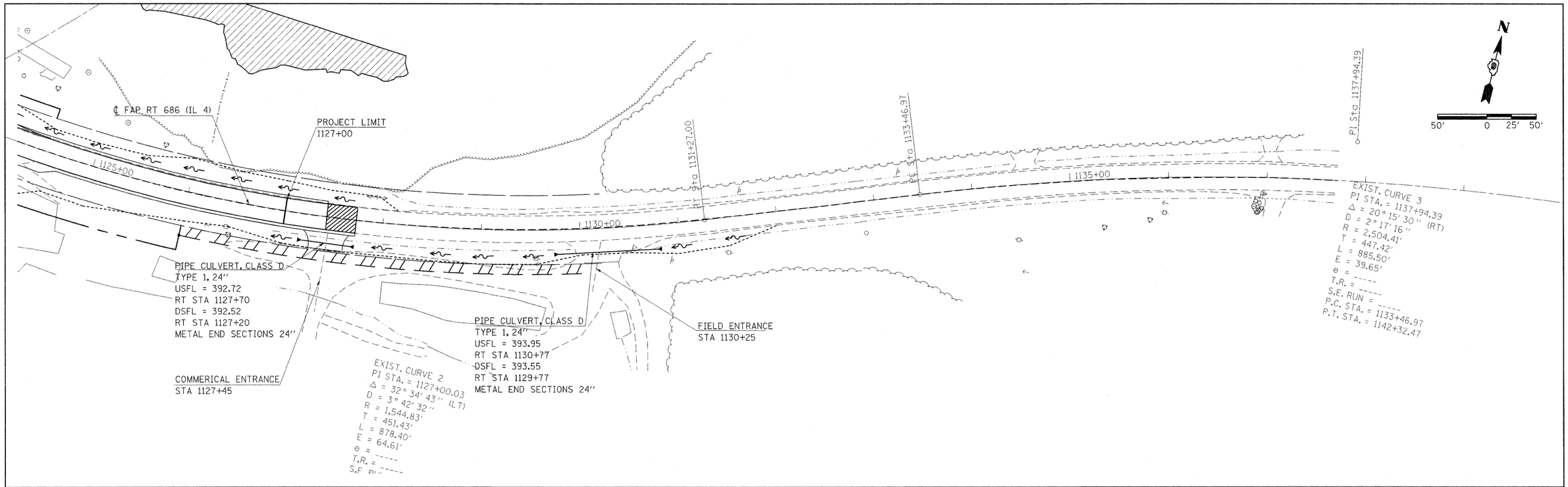

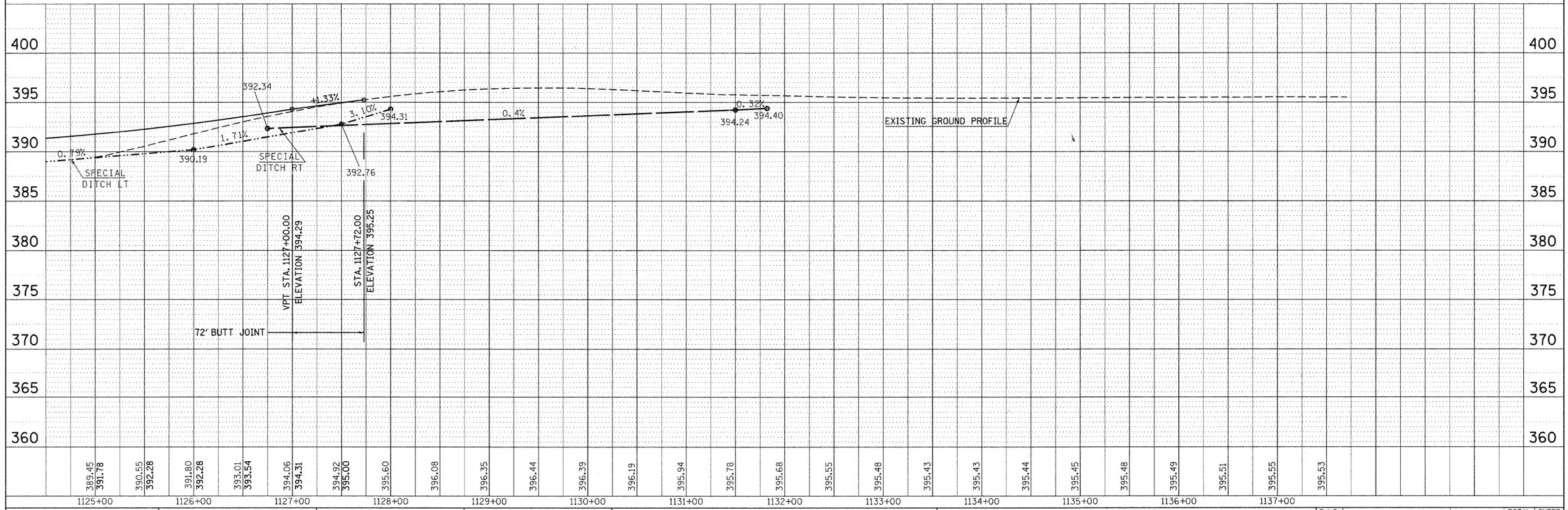

PLAN		BY	DATE
SURVEYED			
PLOTTED			
ALIGNMENT CHECKED			
RT. OF WAY CHECKED			
CADD FILE NAME			
NOTE BOOK			
NO.			

PROFILE		BY	DATE
SURVEYED			
PLOTTED			
GRADES CHECKED			
BRIDGE DESIGN			
NOTE BOOK	STRUCTURE NOTAT'NS CHK'D		
NO.			

FILE NAME = c:\pw_work\pwidot\halsteadtw\dms49786\78049-sht-pln.dgn	USER NAME = halsteadtw	DESIGNED -	REVISED -
		DRAWN -	REVISED -
	PLOT SCALE = 50.0000 ' / in.	CHECKED -	REVISED -
	PLOT DATE = 10/18/2011	DATE -	REVISED -

STATE OF ILLINOIS
DEPARTMENT OF TRANSPORTATION

IL 4 OVER BEACOUP CREEK PLAN PROFILE

SCALE: 1"=50' | SHEET NO. OF SHEETS | STA. 1125+00.00 TO STA. 1137+70.00

F.A.P RTE.	SECTION	COUNTY	TOTAL SHEETS	SHEET NO.
686	114B-1	JACKSON	114	15
		CONTRACT NO. 78049		
FED. ROAD DIST. NO.	ILLINOIS	FED. AID PROJECT		

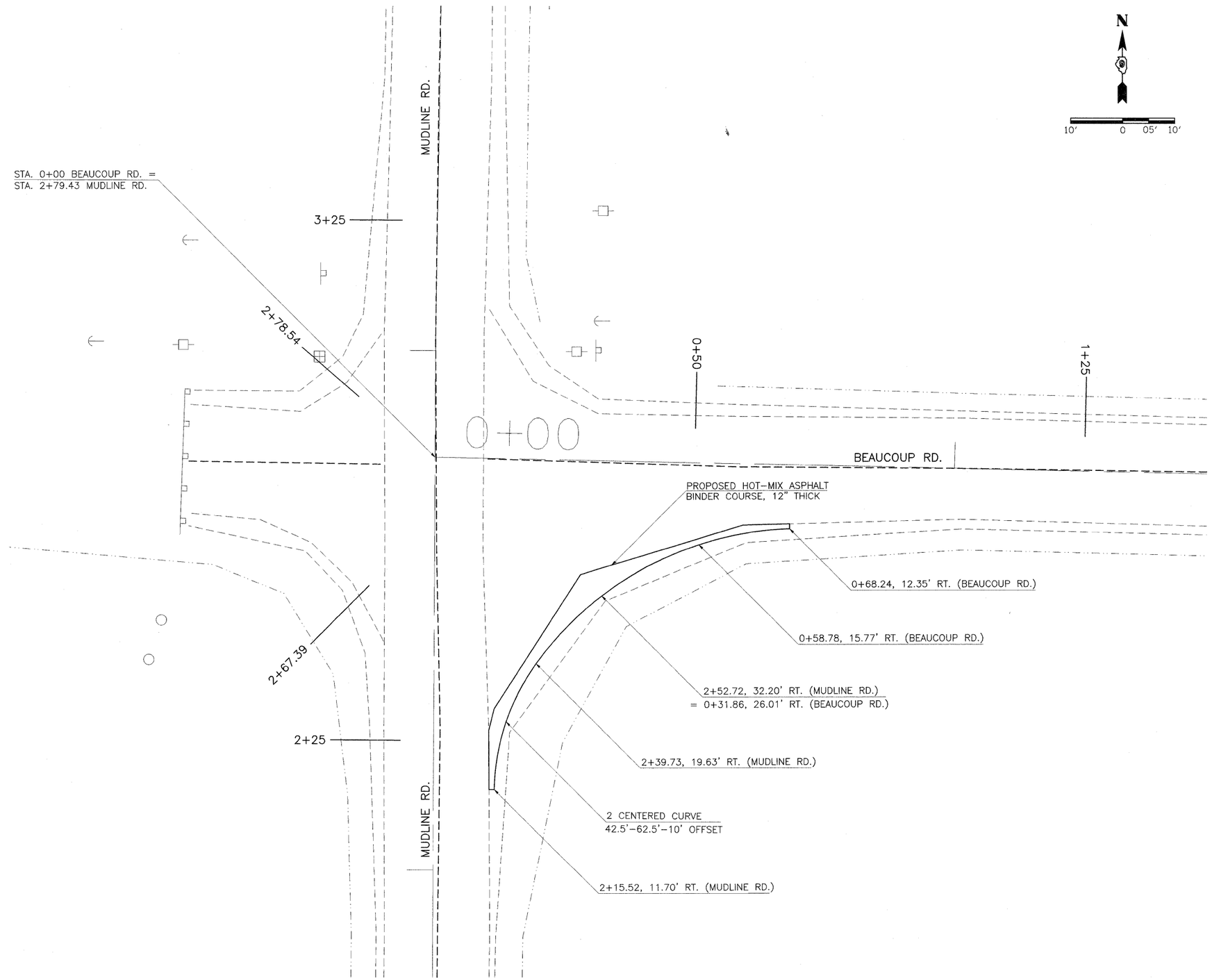

FILE NAME = c:\pw_work\pwidot\halsteadtw\dms49708\78049-sht-pln.dgn	USER NAME = halsteadtw	DESIGNED -	REVISED -	STATE OF ILLINOIS DEPARTMENT OF TRANSPORTATION	MUDLINE ROAD – BEAUCOUP ROAD INTERSECTION IMPROVEMENT	F.A.P. RTE.	SECTION	COUNTY	TOTAL SHEETS	SHEET NO.
		DRAWN -	REVISED -			686	114B-1	JACKSON	114	16
	PLOT SCALE = 10.0000 ' / in.	CHECKED -	REVISED -					CONTRACT NO. 78049		
	PLOT DATE = 10/18/2011	DATE -	REVISED -		SCALE: SHEET NO. OF SHEETS STA. TO STA.		ILLINOIS FED. AID PROJECT			

STATIONING ALONG NW RADIUS	NW RADIUS ELEV.	STATIONING ALONG IL 13/127	OFFSET TO IL 13/127 CENTER LINE	STATIONING ALONG BEAUCOUP RD	OFFSET TO BEAUCOUP RD CENTER LINE
0+00	403.02	520+11.31	12.05		
0+10	402.91	520+01.39	13.14		
0+20	402.76	519+91.83	16.00		
0+30	402.72	519+82.95	20.56		
0+40	402.21	519+75.04	26.62	169+83.49	38.51
0+50	401.67	519+68.06	34.02	169+66.06	31.82
0+60	401.51	519+63.14	42.53	169+57.55	26.59
0+70	401.34			169+48.24	22.94
0+80	401.29			169+38.67	20.03
0+90	400.97			169+29.01	17.44
1+00	400.66			169+19.27	15.18
1+10	400.35			169+09.45	13.24
1+20	400.06			168+99.58	11.63
1+30	399.74			168+89.66	10.35
1+40	399.51			168+79.71	9.40
1+50	399.30			168+69.94	8.79
1+60	399.07			168+59.73	8.50
1+66.84	398.88			168+52.89	8.50

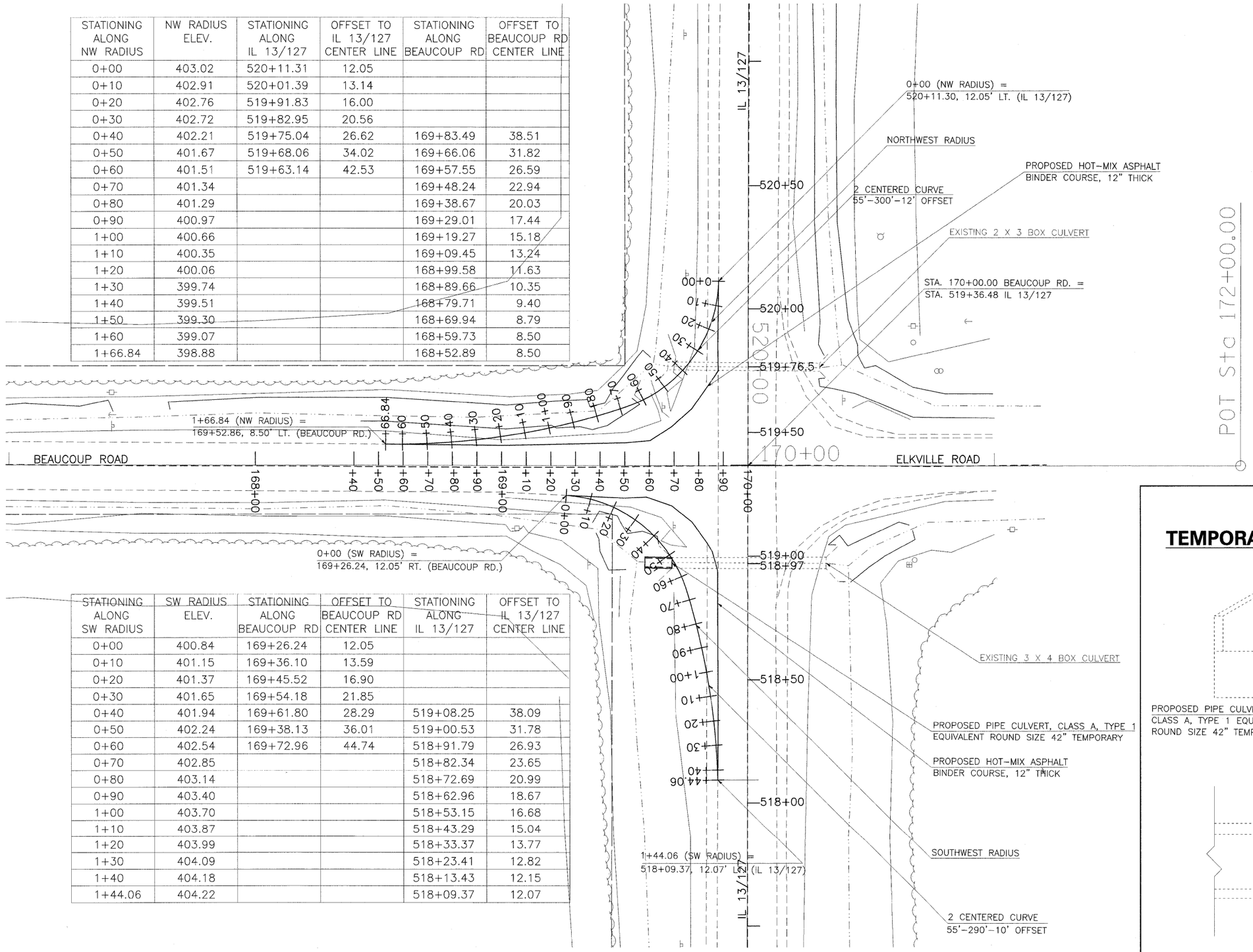

STATIONING ALONG SW RADIUS	SW RADIUS ELEV.	STATIONING ALONG BEAUCOUP RD	OFFSET TO BEAUCOUP RD CENTER LINE	STATIONING ALONG IL 13/127	OFFSET TO IL 13/127 CENTER LINE
0+00	400.84	169+26.24	12.05		
0+10	401.15	169+36.10	13.59		
0+20	401.37	169+45.52	16.90		
0+30	401.65	169+54.18	21.85		
0+40	401.94	169+61.80	28.29	519+08.25	38.09
0+50	402.24	169+38.13	36.01	519+00.53	31.78
0+60	402.54	169+72.96	44.74	518+91.79	26.93
0+70	402.85			518+82.34	23.65
0+80	403.14			518+72.69	20.99
0+90	403.40			518+62.96	18.67
1+00	403.70			518+53.15	16.68
1+10	403.87			518+43.29	15.04
1+20	403.99			518+33.37	13.77
1+30	404.09			518+23.41	12.82
1+40	404.18			518+13.43	12.15
1+44.06	404.22			518+09.37	12.07

DETAILS
TEMPORARY CULVERT EXTENSION

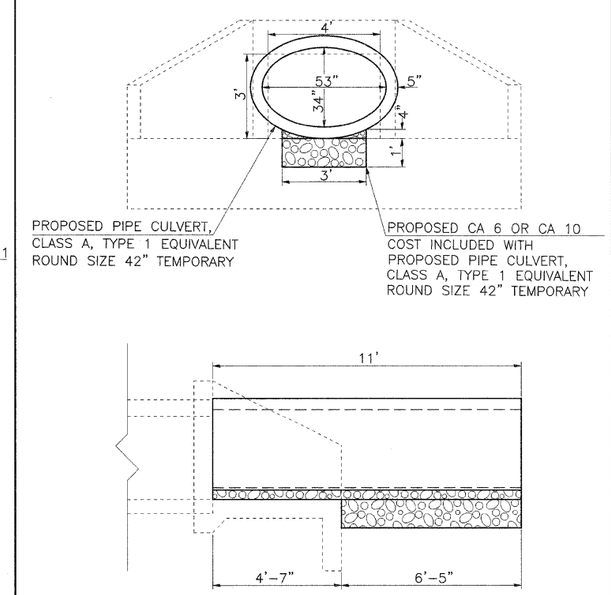

FILE NAME = c:\pw_work\pwidot\halsteadtw\dms49708\78049-sht-pln.dgn	USER NAME = halsteadtw	DESIGNED -	REVISED -
		DRAWN -	REVISED -
	PLOT SCALE = 20.0000 ' / in.	CHECKED -	REVISED -
	PLOT DATE = 10/18/2011	DATE -	REVISED -

STATE OF ILLINOIS
DEPARTMENT OF TRANSPORTATION

IL 13/127 – BEAUCOUP ROAD
INTERSECTION IMPROVEMENT

SCALE: | SHEET NO. OF SHEETS | STA. TO STA.

F.A.P. RTE.	SECTION	COUNTY	TOTAL SHEETS	SHEET NO.
686	114B-1	JACKSON	114	17
		CONTRACT NO. 78049		
		ILLINOIS FED. AID PROJECT		

DETOUR SIGNING PLAN

SIGN DETAIL

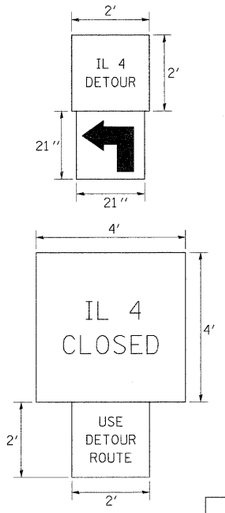

NOTES:

1. THE CONTRACTOR HAS THE OPTION OF USING METAL POSTS INSTEAD OF WOOD.
2. ALL SIGNS SHALL BE BLACK ON ORANGE. THE POSTS SHALL BE PLACED 12 FEET FROM THE EDGE OF PAVEMENT AS DIRECTED BY THE ENGINEER.
3. ALL SIGNS AND HARDWARE REQUIRED TO INSTALL THE DETOUR ROUTE SIGNING SHALL BE INCLUDED IN COST OF TRAFFIC CONTROL AND PROTECTION, BLR 21.
4. SIGNS SHALL BE REMOVED ON COMPLETION OF THE CONTRACT AT THE DIRECTION OF THE ENGINEER. THIS WORK SHALL BE COMPLETED ACCORDING TO SECTION 724 OF THE STANDARD SPECIFICATIONS. THIS WORK WILL NOT BE PAID FOR. THE SIGNS AND POSTS SHALL BECOME THE PROPERTY OF THE CONTRACTOR.
5. THE RELOCATING, MAINTENANCE OR REPLACEMENT OF SIGNS SHALL BE PAID FOR IN ACCORDANCE WITH ARTICLE 109.04.
6. EXACT SIGN PLACEMENT WILL BE DETERMINED BY THE ENGINEER.
7. THE DISTRICT 9 OPERATIONS ENGINEER SHALL BE CONTACTED 10 DAYS PRIOR TO THE ERECTION OF SIGNS.

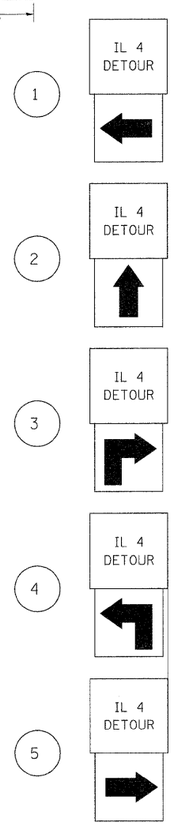

3 REQUIRED

7 REQUIRED

4 REQUIRED

3 REQUIRED

4 REQUIRED

6 IL 4 CLOSED USE DETOUR ROUTE — 5 REQUIRED

MB — 2 REQUIRED (2 WEEKS BEFORE CLOSURE)

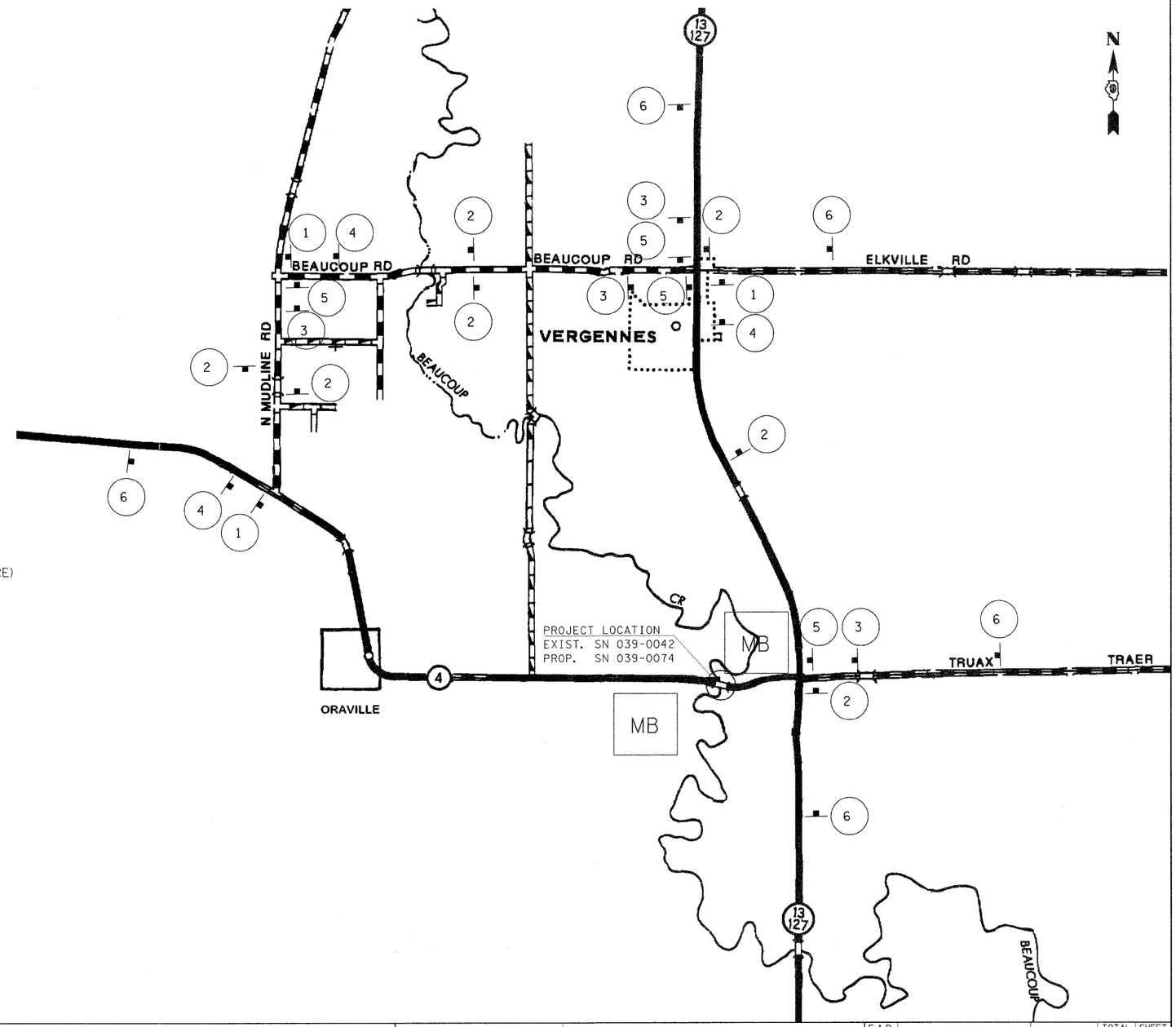

USER NAME = porterwc	DESIGNED -	REVISED -	STATE OF ILLINOIS DEPARTMENT OF TRANSPORTATION
	DRAWN -	REVISED -	
PLOT SCALE = 50.0000 ' / in.	CHECKED -	REVISED -	
PLOT DATE = 11/3/2011	DATE -	REVISED -	

DETOUR SIGNING SHEET

SCALE: | SHEET NO. OF SHEETS | STA. TO STA.

F.A.P. RTE.	SECTION	COUNTY	TOTAL SHEETS	SHEET NO.
686	114B-1	JACKSON	114	18
		CONTRACT NO. 78049		
	ILLINOIS	FED. AID PROJECT		

FILE NAME = c:\pw_work\pwidot\porterwc\dms49706\78049-sht-pln.dgn

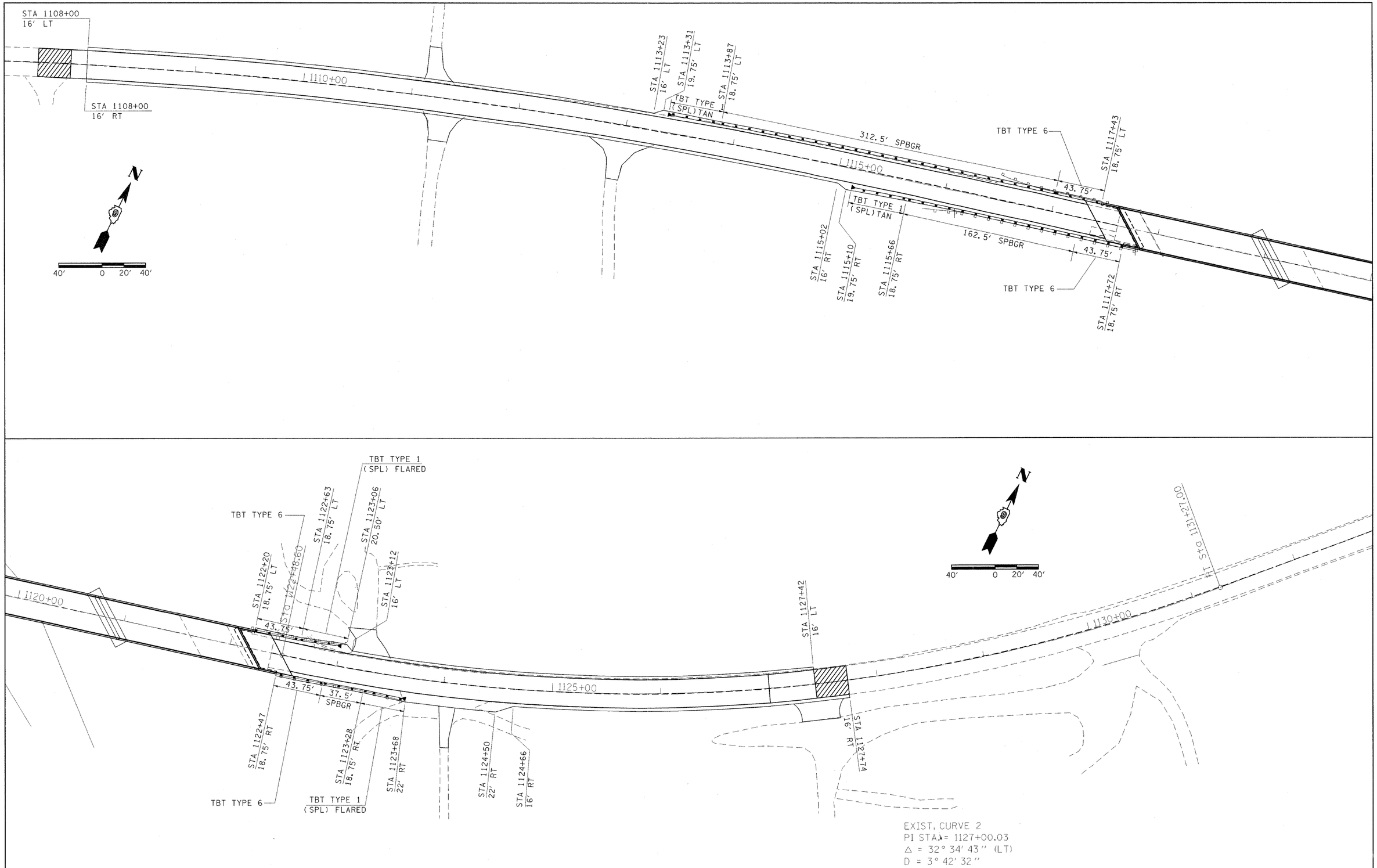

FILE NAME = c:\pw_work\pwidot\halsteadtw\dms49708\78049-sht-pln.dgn	USER NAME = halsteadtw	DESIGNED -	REVISED -	**STATE OF ILLINOIS DEPARTMENT OF TRANSPORTATION**	**PROPOSED HMA SHOULDER & GUARDRAIL LAYOUT**	F.A.P. RTE.	SECTION	COUNTY	TOTAL SHEETS / SHEET NO.
		DRAWN -	REVISED -			686	114B-1	JACKSON	114 / 19
	PLOT SCALE = 40.0000 ' / in.	CHECKED -	REVISED -					CONTRACT NO. 78049	
	PLOT DATE = 10/18/2011	DATE -	REVISED -		SCALE: SHEET NO. OF SHEETS STA. TO STA.		ILLINOIS	FED. AID PROJECT	

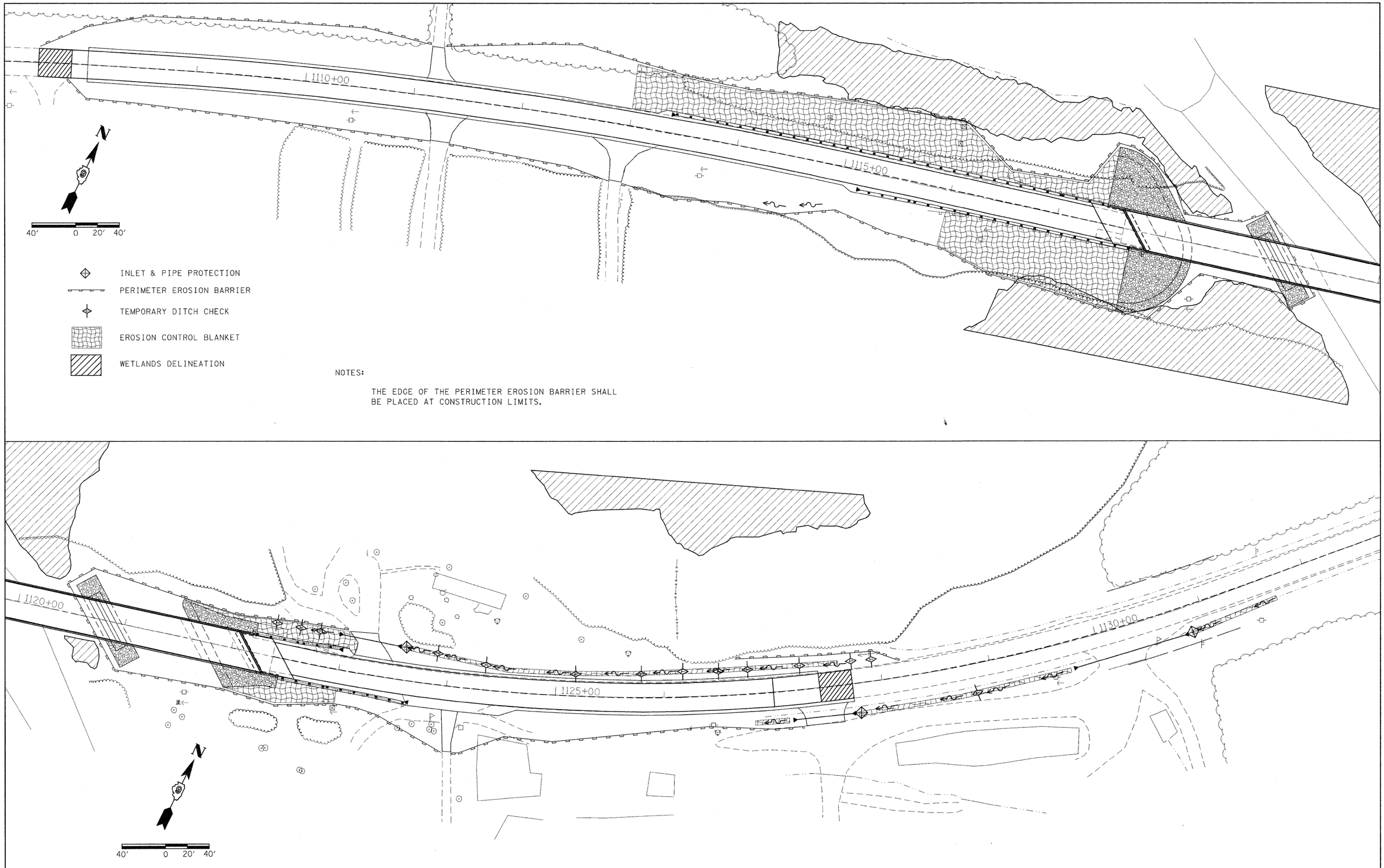

NOTES:

THE EDGE OF THE PERIMETER EROSION BARRIER SHALL BE PLACED AT CONSTRUCTION LIMITS.

FILE NAME = c:\pw_work\pwidot\halsteadtw\dms49708\78049-sht-pln.dgn	USER NAME = halsteadtw	DESIGNED -	REVISED -	STATE OF ILLINOIS DEPARTMENT OF TRANSPORTATION	EROSION CONTROL PLAN	F.A.P. RTE.	SECTION	COUNTY	TOTAL SHEETS	SHEET NO.
	PLOT SCALE = 40.0000 ' / in.	DRAWN -	REVISED -			686	114B-1	JACKSON	114	20
	PLOT DATE = 10/18/2011	CHECKED -	REVISED -			CONTRACT NO. 78049				
		DATE -	REVISED -		SCALE: SHEET NO. OF SHEETS STA. TO STA.	ILLINOIS FED. AID PROJECT				

PARCEL NO.	PROPERTY OWNER	PURPOSE	ACREAGE
121	PURLE ALSTAT	ROW / T.E.	1.020 / 0.839
124	STACEY R. AND TONI WRIGHT	ROW	0.040
125	SCOTT EVANS	ROW	0.184

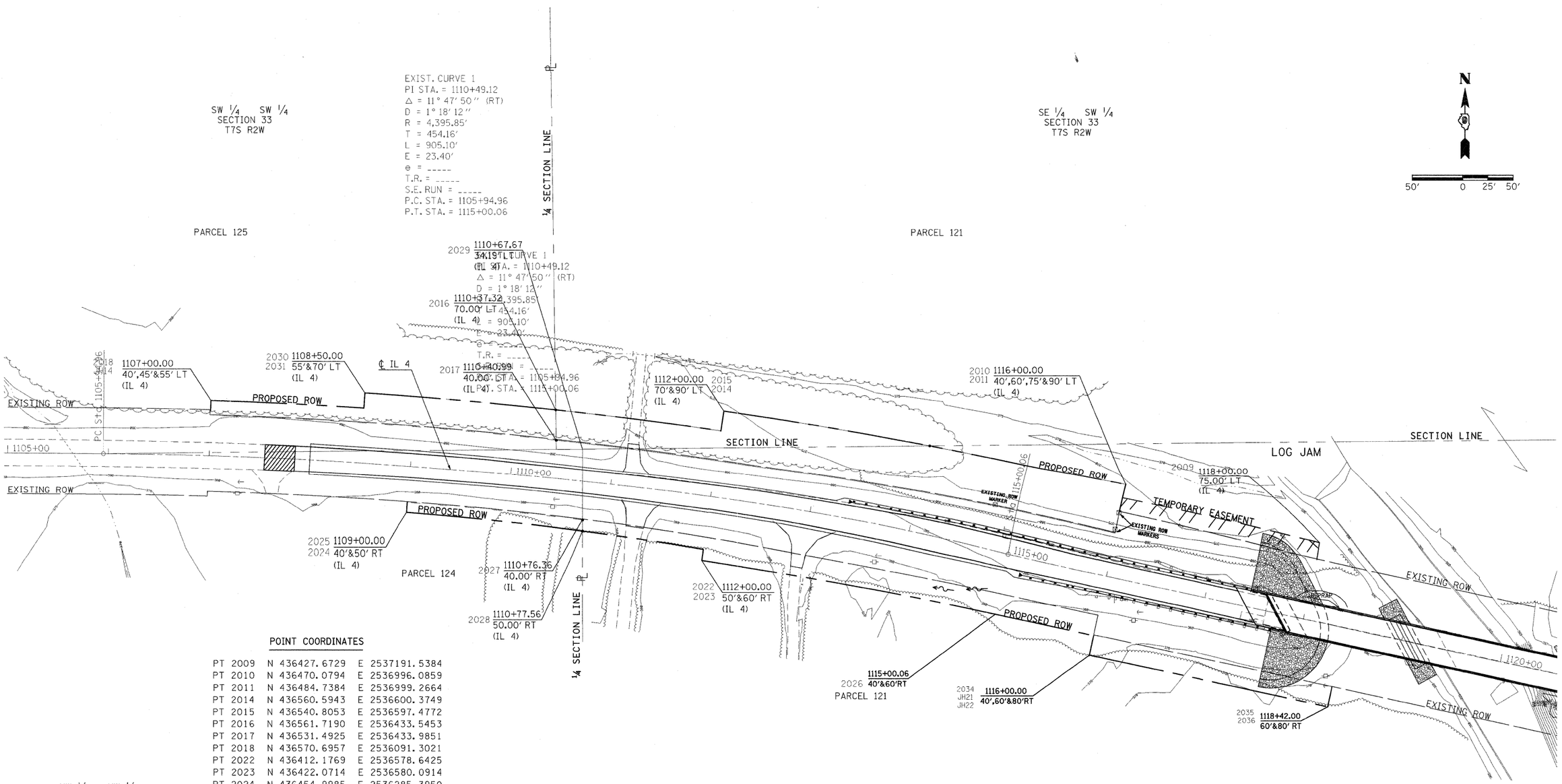

POINT COORDINATES

PT 2009	N 436427.6729	E 2537191.5384
PT 2010	N 436470.0794	E 2536996.0859
PT 2011	N 436484.7384	E 2536999.2664
PT 2014	N 436560.5943	E 2536600.3749
PT 2015	N 436540.8053	E 2536597.4772
PT 2016	N 436561.7190	E 2536433.5453
PT 2017	N 436531.4925	E 2536433.9851
PT 2018	N 436570.6957	E 2536091.3021
PT 2022	N 436412.1769	E 2536578.6425
PT 2023	N 436422.0714	E 2536580.0914
PT 2024	N 436454.9985	E 2536285.3950
PT 2025	N 436464.9688	E 2536286.1657
PT 2026	N 436359.3388	E 2536869.7971
PT 2027	N 436448.0086	E 2536460.0891
PT 2028	N 436437.9389	E 2536460.0918
PT 2029	N 436522.7091	E 2536460.0688
PT 2030	N 436563.3008	E 2536242.9914
PT 2031	N 436578.2684	E 2536243.9773
PT 2034	N 436318.6037	E 2536963.2209
PT 2035	N 436267.2918	E 2537199.7184
PT 2036	N 436286.8371	E 2537203.9590
PT JH14	N 436555.7032	E 2536090.8274
PT JH21	N 436338.1490	E 2536967.4615
PT JH22	N 436357.6942	E 2536971.7022

FILE NAME = c:\pw_work\pwidot\halsteadtw\dms49753\r901609_sht_row.dgn	USER NAME = halsteadtw	DESIGNED -	REVISED -
		DRAWN -	REVISED -
	PLOT SCALE = 50.0000 ' / in.	CHECKED -	REVISED -
	PLOT DATE = 10/18/2011	DATE -	REVISED -

STATE OF ILLINOIS
DEPARTMENT OF TRANSPORTATION

IL 4 OVER BEACOUP CREEK
RIGHT OF WAY PLAN

SCALE: 1"=50' | SHEET NO. OF SHEETS | STA. 1105+00.00 TO STA. 1120+00.00

F.A.P. RTE.	SECTION	COUNTY	TOTAL SHEETS	SHEET NO.
686	114B-1	JACKSON	114	21
	R-99-016-09	CONTRACT NO. 78049		
		ILLINOIS FED. AID PROJECT		

PARCEL NO.	PROPERTY OWNER	PURPOSE	ACREAGE
121	PURLE ALSTAT	ROW / T.E.	1.020 / 0.839
122	DANIEL ALSTAT	ROW / T.E.	0.111 / 0.094

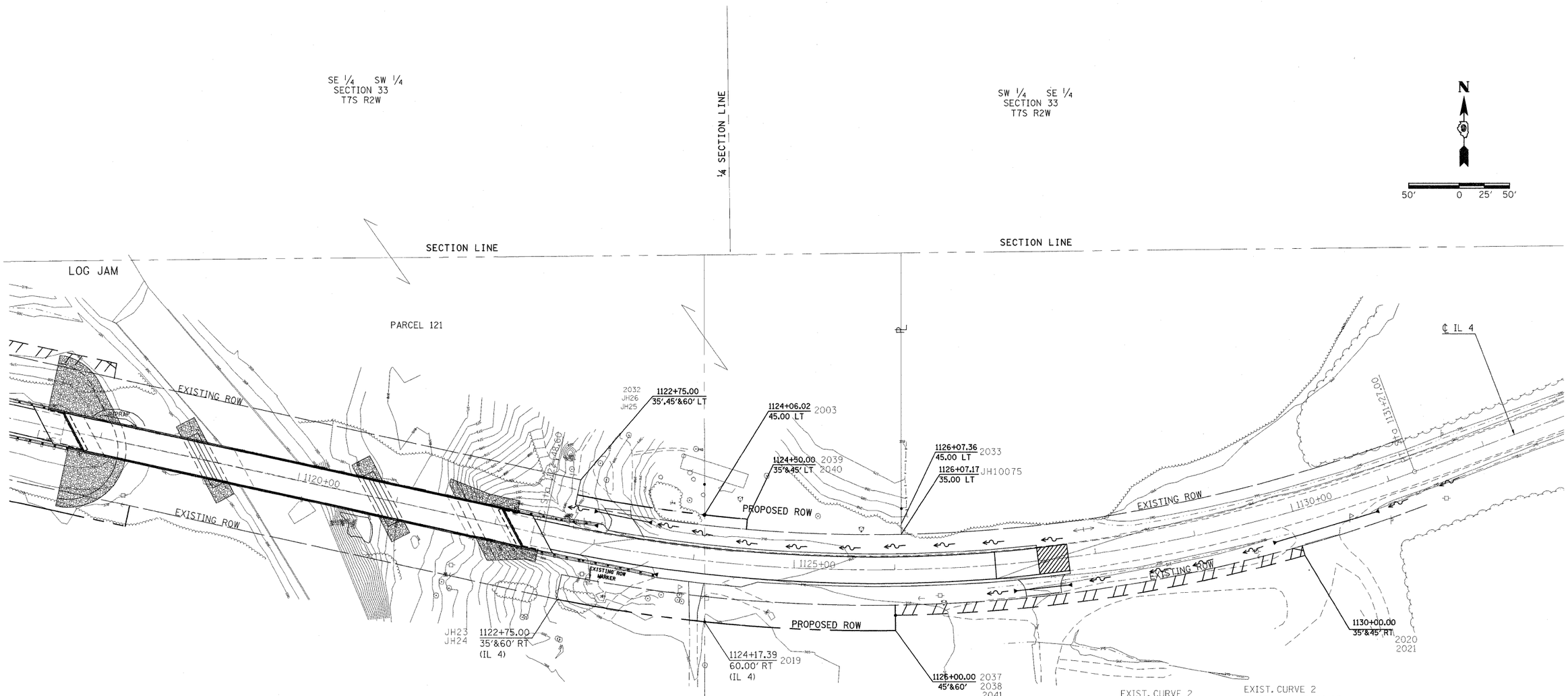

EXIST. CURVE 2
PI STA. = 1127+00.03
Δ = 32° 34′ 43″ (LT)
D = 3° 42′ 32″
R = 1,544.83′
T = 451.43′
L = 878.40′
E = 64.61′
e = _____
T.R. = _____
S.E. RUN = _____
P.C. STA. = 1122+48.60
P.T. STA. = 1131+27.00

EXIST. CURVE 2
PI STA. = 1127+00.03
Δ = 32° 34′ 43″ (LT)
D = 3° 42′ 32″
R = 1,544.83′
T = 451.43′
L = 878.40′
E = 64.61′
e = _____
T.R. = _____
S.E. RUN = _____
P.C. STA. = 1122+48.60
P.T. STA. = 1131+27.00

POINT COORDINATES

PT	2003	N 436278.4900	E 2537774.3228
PT	2019	N 436172.8716	E 2537774.3585
PT	2020	N 436169.0819	E 2538067.5136
PT	2021	N 436194.0048	E 2538065.5520
PT	2032	N 436298.0168	E 2537648.6709
PT	2033	N 436269.3930	E 2537969.4501
PT	2039	N 436264.3678	E 2537815.9909
PT	2040	N 436274.3331	E 2537816.8828
PT	2037	N 436189.2135	E 2537963.4142
PT	2038	N 436164.2873	E 2537963.7585
PT	2041	N 436179.2859	E 2537963.5514
PT	JH23	N 436195.0388	E 2537628.1640
PT	JH24	N 436219.5574	E 2537633.0466
PT	JH25	N 436288.2094	E 2537646.7179
PT	JH26	N 436312.7279	E 2537651.6005
PT	JH10075	N 436259.3913	E 2537969.4531

FILE NAME = c:\pw_work\pwidot\halsteadtw\dms49753\r901609_sht_row.dgn	USER NAME = halsteadtw	DESIGNED -	REVISED -
		DRAWN -	REVISED -
	PLOT SCALE = 50.0000 ' / in.	CHECKED -	REVISED -
	PLOT DATE = 10/18/2011	DATE -	REVISED -

STATE OF ILLINOIS
DEPARTMENT OF TRANSPORTATION

IL 4 OVER BEACOUP CREEK
RIGHT OF WAY PLAN

SCALE: 1 "=50′ | SHEET NO. OF SHEETS | STA. 1118+00.00 TO STA. 1132+00.00

F.A.P. RTE.	SECTION	COUNTY	TOTAL SHEETS	SHEET NO.
686	114B-1	JACKSON	114	22
	R-99-016-09	CONTRACT NO. 78049		
	ILLINOIS FED. AID PROJECT			

SEEDING & MULCHING

GENERAL NOTES

IN GENERAL, ALL EARTH SURFACES DISTURBED DURING CONSTRUCTION OPERATIONS SHALL BE SEEDED AND MULCHED UPON COMPLETION OF ALL GRADING OPERATIONS.

FERTILIZER NUTRIENTS AND LIMESTONE SHALL BE APPLIED TO ALL SEEDED AREAS.

THE RATES OF APPLICATION OF FERTILIZER, MULCH AND LIMESTONE SHALL BE AS SPECIFIED IN THE SPECIAL PROVISIONS.

SECTIONS 250 AND 251 OF THE STANDARD SPECIFICATIONS SHALL GOVERN THIS WORK EXCEPT AS SPECIFIED HEREIN OR AS NOTED IN THE SPECIAL PROVISIONS.

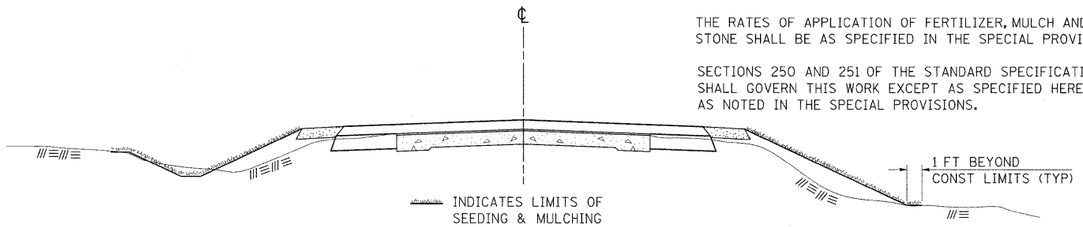

REVISIONS

REDRAWN	2-15-89
REVISED	8-15-94
REVISED	6-3-99
REVISED	3-27-08

STD. 9-12

BUTT JOINT

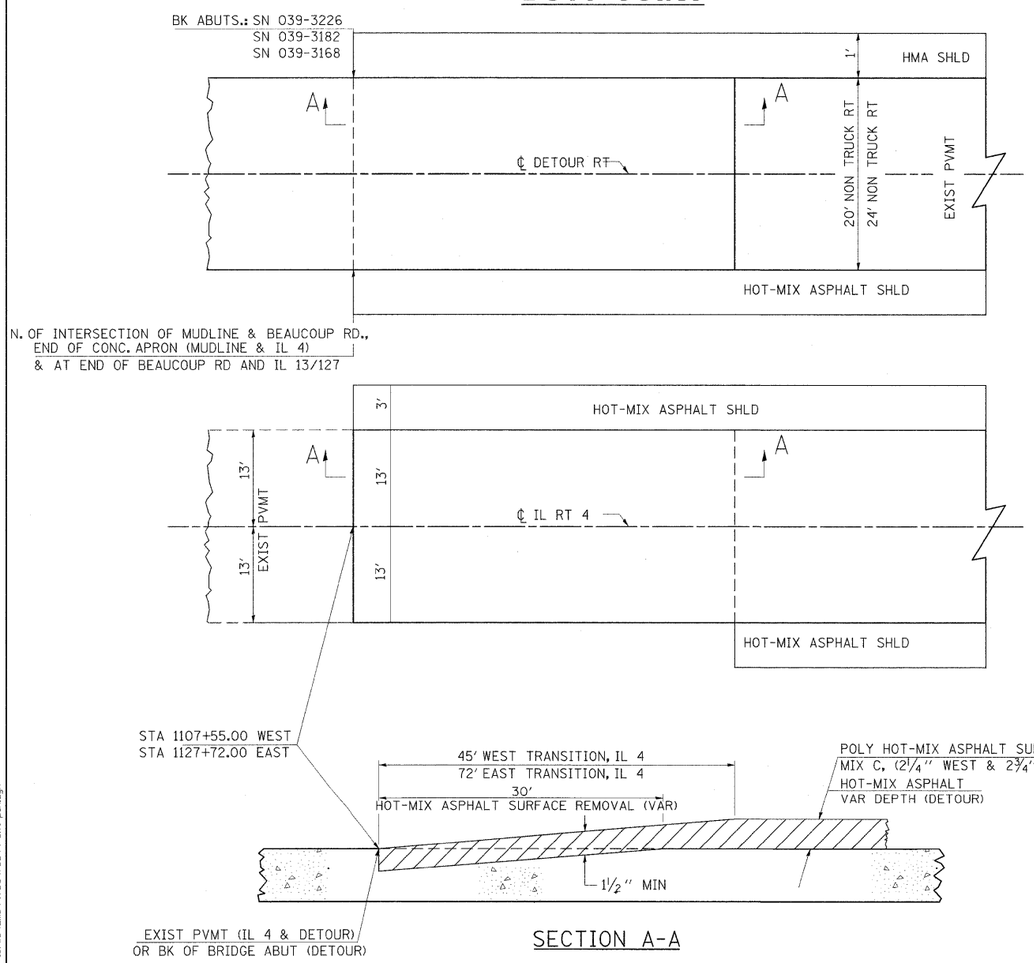

SECTION A-A

REVISIONS

DRAWN	10-17-90
REVISED	01-11-07
REVISED	3-25-08
REVISED	

STD. 9-86

TYPICAL CROSS SECTION SHOWING STEP CONSTRUCTION ON EXISTING FILL

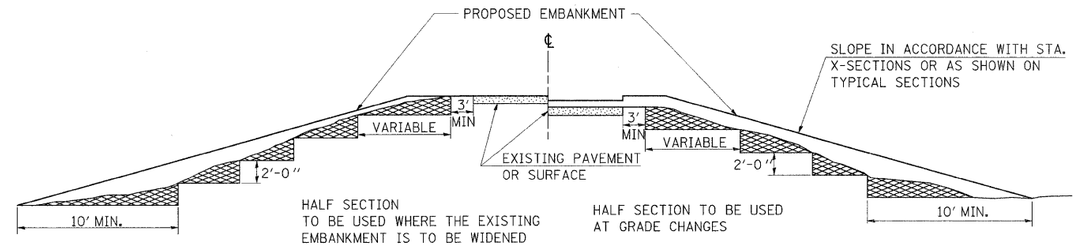

MATERIAL TO BE REMOVED AND REPLACED IN THE EMBANKMENT IN ACCORDANCE WITH ART. 205.04 OF THE STANDARD SPECIFICATION. COST TO BE INCLUDED IN THE VARIOUS ITEMS OF EXCAVATION AND NO ADDITIONAL COMPENSATION WILL BE ALLOWED BECAUSE OF THIS WORK.

REVISIONS

REDRAWN	2-15-89
REVISED	8-15-94
CHECKED	6-3-99
RESIZED	5-7-08

STD. 9-16

TEMPORARY DITCH CHECKS

PLACEMENT OF TEMPORARY DITCH CHECK IN DRAINAGE WAY

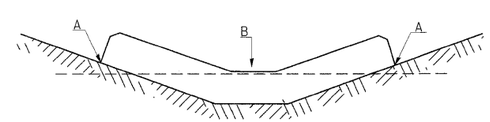

POINTS A SHOULD BE HIGHER THAN POINT B

SPACING BETWEEN TEMPORARY DITCH CHECKS

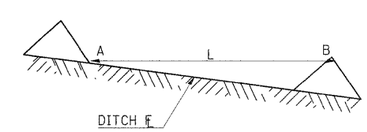

L = THE DISTANCE SUCH THAT POINTS A AND B ARE OF EQUAL ELEVATION

B = THE LOW POINT IN CENTER OF CHECK

REVISIONS

DRAWN	9-01-99
REVISED	10-3-01
RESIZED	5-8-08
REVISED	05-04-10

STD. 9-108

FILE NAME = c:\pw_work\pwidot\porterwc\dms49705\78049-sht-pln.dgn

USER NAME = porterwc	DESIGNED -	REVISED -	
	DRAWN -	REVISED -	
PLOT SCALE = 50.0000 ' / in.	CHECKED -	REVISED -	
PLOT DATE = 11/3/2011	DATE -	REVISED -	

STATE OF ILLINOIS
DEPARTMENT OF TRANSPORTATION

DISTRICT STANDARDS

SCALE: | SHEET NO. OF SHEETS | STA. TO STA.

F.A.P. RTE.	SECTION	COUNTY	TOTAL SHEETS	SHEET NO.
686	114B-1	JACKSON	114	23

CONTRACT NO. 78049

ILLINOIS FED. AID PROJECT

RURAL SIDE APPROACH DETAILS

PRIVATE AND COMMERCIAL ENTRANCES

SIDEROADS

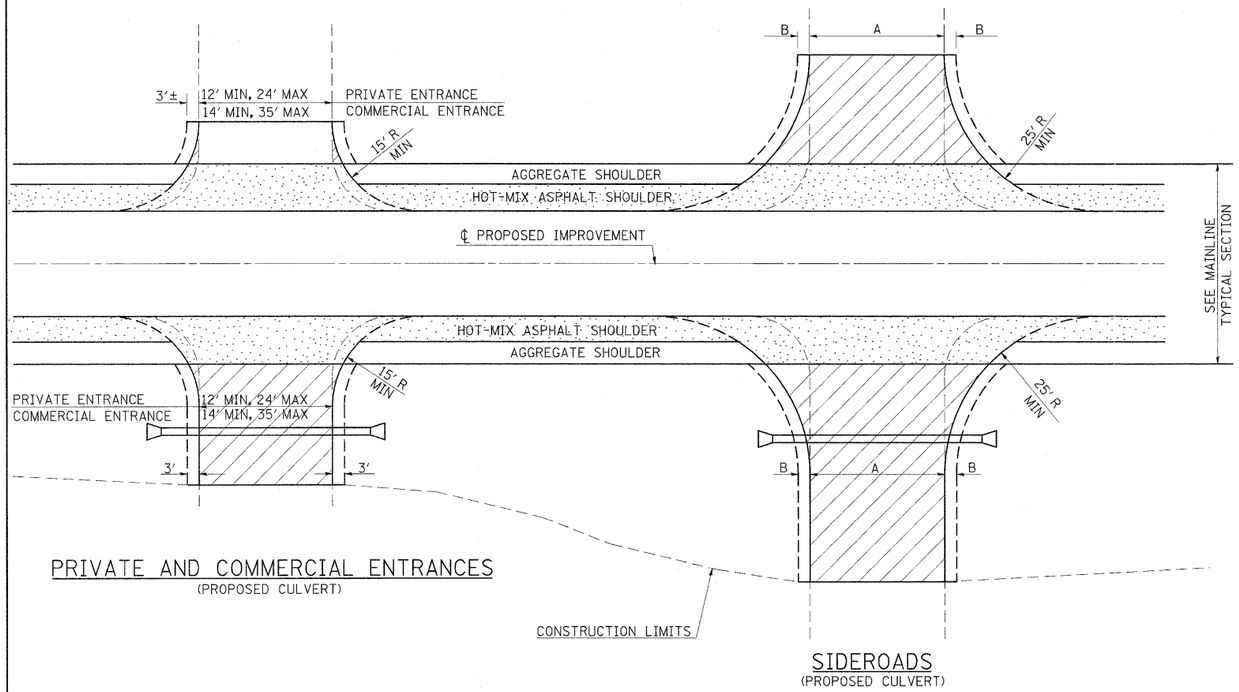

PRIVATE AND COMMERCIAL ENTRANCES
(PROPOSED CULVERT)

SIDEROADS
(PROPOSED CULVERT)

SIDEROAD DIMENSIONS (MIN.)

ADT	A (FT)	B (FT)
0 TO 250	18'	2'
250 TO 400	20'	2'
GREATER THAN 400	22'	4'

FIELD ENTRANCE TREATMENT

CONSTRUCT MAINLINE HOT-MIX ASPHALT AND AGGREGATE SHOULDERS THROUGH FIELD ENTRANCES.

IF A PIPE IS REQUIRED, PROVIDE A 22' WIDE EARTH EMBANKMENT WITH 15' RADII AT THE INTERSECTION.

WIDTH TRANSITION DETAIL TO EXISTING

(IF APPLICABLE)

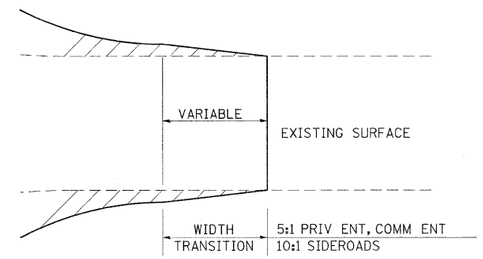

DETAIL FOR CALCULATING CULVERT LENGTH

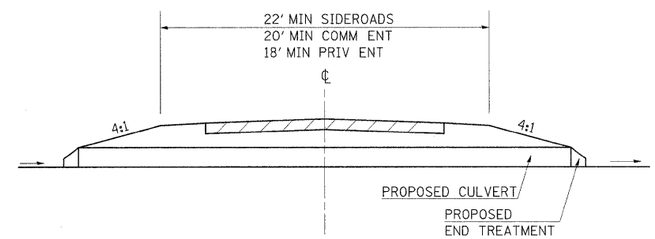

PRIVATE AND COMMERCIAL ENTRANCES

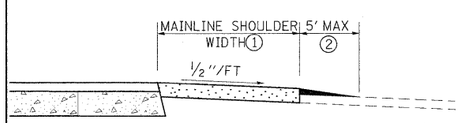

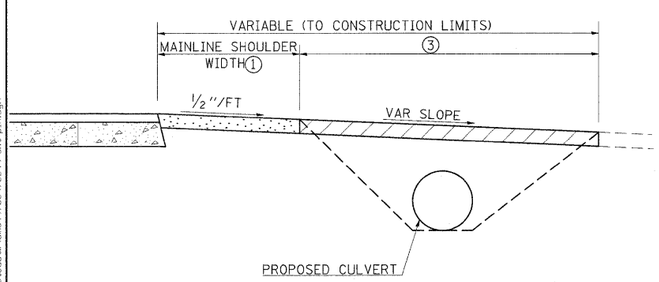

SIDEROADS

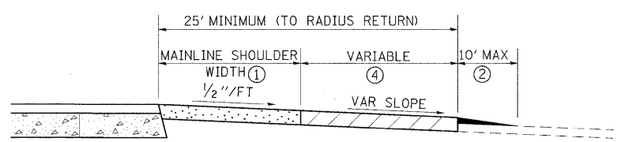

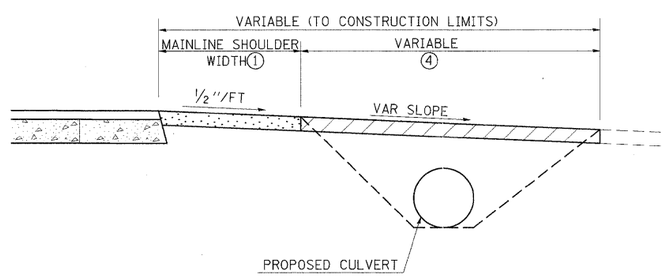

LEGEND

① CONSTRUCT HOT-MIX ASPHALT SHOULDER "FULL SHOULDER WIDTH" THROUGH ENTRANCE/INTERSECTION UNLESS OTHERWISE SHOWN ON THE PLANS OR AS DIRECTED BY THE ENGINEER.

② IF REQUIRED, AGGREGATE TAPER FOR EXISTING GRAVEL SURFACE; HOT-MIX ASPHALT TAPER FOR EXISTING HIGHER TYPE SURFACES.

③ 6" AGGREGATE SURFACE COURSE FOR EXISTING GRAVEL SURFACE; 2" HOT-MIX ASPHALT RESURFACING ON 4" AGGREGATE BASE COURSE FOR EXISTING HOT-MIX ASPHALT SURFACE; PCC DRIVEWAY PAVEMENT (6" - PE; 7" - CE) FOR EXISTING CONCRETE SURFACE.

④ 3" MINIMUM HOT-MIX ASPHALT RESURFACING ON 8" MINIMUM AGGREGATE BASE COURSE FOR EXISTING GRAVEL SURFACE OR OIL & CHIP SURFACE; MATCH EXISTING FOR EXISTING HIGHER TYPE SURFACES.

GENERAL NOTES

1. ENTRANCE LOCATIONS ARE TO COMPLY WITH IDOT'S POLICY "ACCESS TO STATE HIGHWAYS".
2. IN GENERAL, RELOCATED PRIVATE ENTRANCES ARE TO HAVE A 16' WIDE SURFACE WITH 3' WIDE SHOULDERS (22' WIDE EMBANKMENT).
3. SEE PLANS FOR PROPOSED PROFILE GRADES AT ENTRANCES/SIDEROADS. THE DESIRABLE MAXIMUM PROFILE GRADE FOR ENTRANCES ARE 12% FOR PE; 10% FOR CE.
4. ENTRANCE PIPE CULVERTS ARE TO BE A MINIMUM 15" DIAMETER AND NORMALLY REPLACED IN KIND; SIDEROAD PIPE CULVERTS ARE GENERALLY TO BE CONCRETE (18" MINIMUM DIAMETER).
5. THE INTERSECTION RADII OF SIDEROADS CONSTRUCTED TO FULL POLICY STANDARDS SHOULD COMPLY WITH THAT NOTED IN THE BUREAU OF LOCAL ROADS ADMINISTRATIVE POLICIES MANUAL (5-8-13).

STD. 9-83

REVISIONS

DRAWN	3-15-91
REVISED	10-02-91
REVISED	5-15-92
REVISED	1-20-00
REVISED	01-11-07
RESIZED	5-7-08

FILE NAME = c:\pw_work\pwidot\Halsteadtw\dms49780\78049-sht-plrdgn

USER NAME = halsteadtw	DESIGNED -	REVISED -	
	DRAWN -	REVISED -	
PLOT SCALE = 50.0000 ' / in.	CHECKED -	REVISED -	
PLOT DATE = 10/18/2011	DATE -	REVISED -	

STATE OF ILLINOIS
DEPARTMENT OF TRANSPORTATION

DISTRICT STANDARDS

SCALE: | SHEET NO. OF SHEETS | STA. TO STA.

F.A.P. RTE.	SECTION	COUNTY	TOTAL SHEETS	SHEET NO.
686	114B-1	JACKSON	114	24

CONTRACT NO. 78049

ILLINOIS FED. AID PROJECT

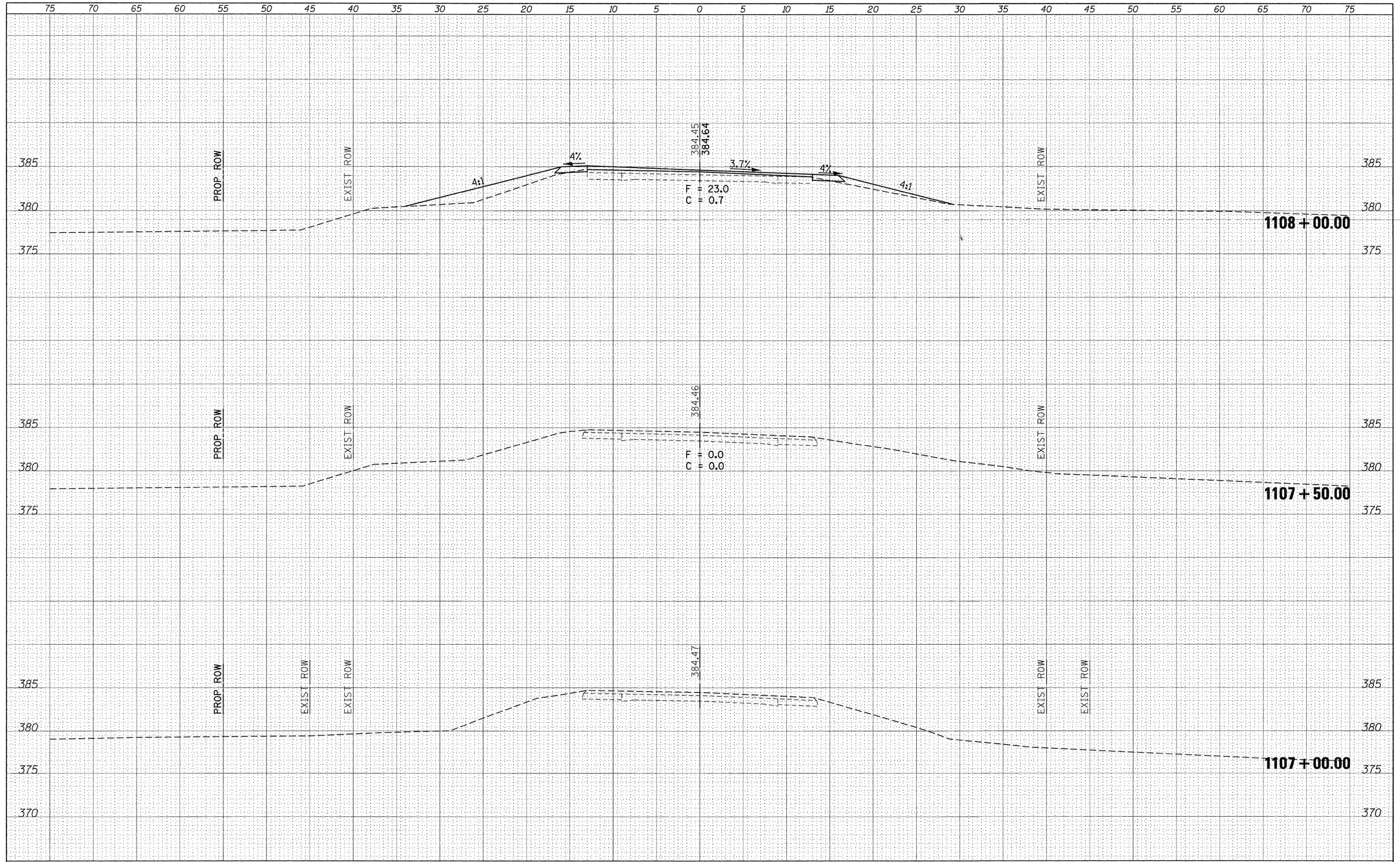

FINAL SURVEY	BY	DATE
SURVEYED		
PLOTTED		
TEMPLATE		
AREAS		
AREAS CHECKED		
NOTE BOOK		
NO.		

ORIGINAL SURVEY	BY	DATE
SURVEYED		
PLOTTED		
TEMPLATE		
AREAS		
AREAS CHECKED		
NOTE BOOK		
NO.		

FILE NAME = c:\pw_work\pwidot\halsteadtw\dms49753\78049-xs sheet81611.dgn	USER NAME = halsteadtw	DESIGNED -	REVISED -
		DRAWN -	REVISED -
	PLOT SCALE = 5.0000 ' / in.	CHECKED -	REVISED -
	PLOT DATE = 10/18/2011	DATE -	REVISED -

STATE OF ILLINOIS
DEPARTMENT OF TRANSPORTATION

IL RTE. 4

SCALE: SHEET OF SHEETS STA. 1107+00.00 TO STA. 1108+00.00

F.A.P RTE.	SECTION	COUNTY	TOTAL SHEETS	SHEET NO.
686	114B-1	JACKSON	114	25
		CONTRACT NO. 78049		
		ILLINOIS FED. AID PROJECT		

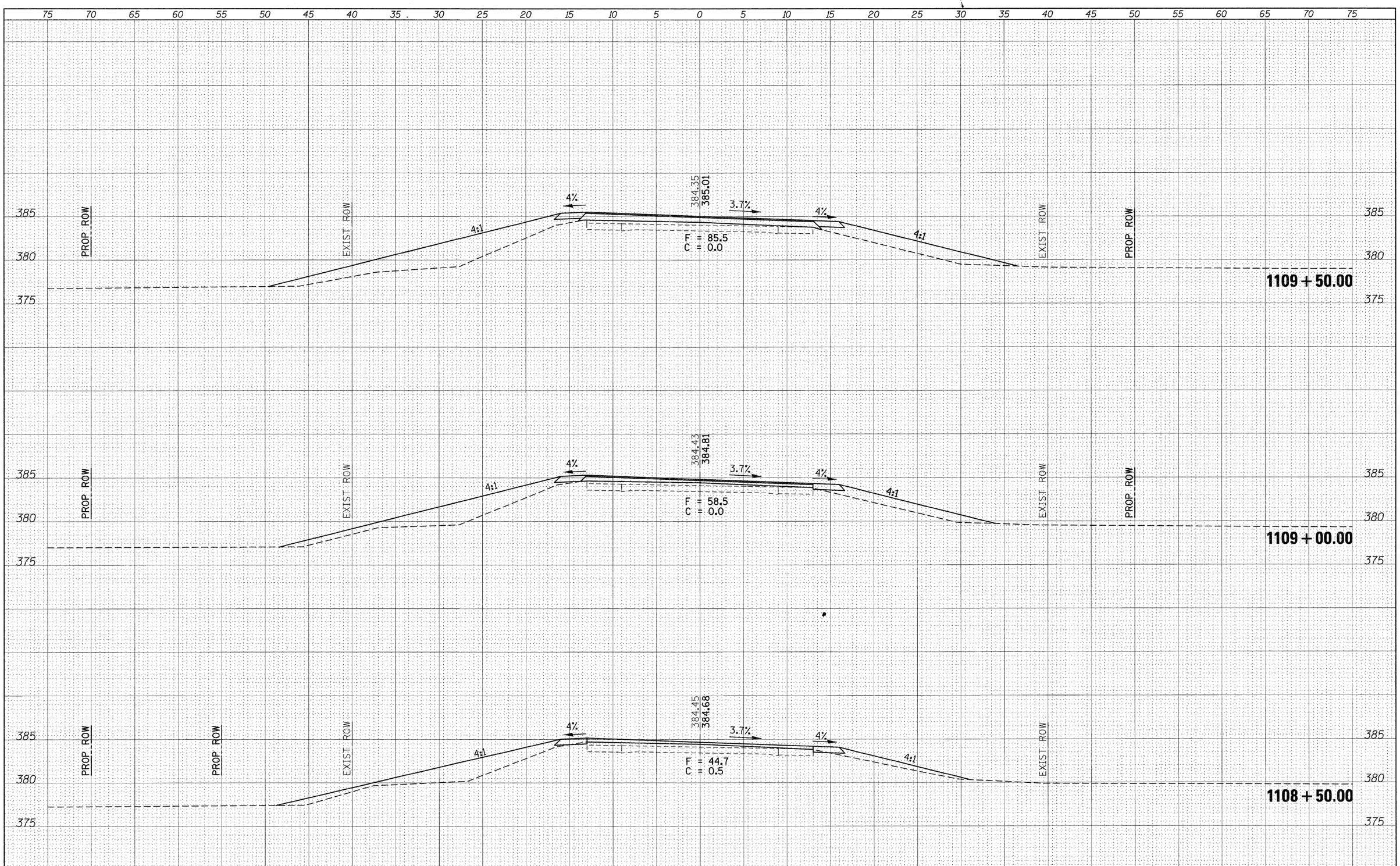

FILE NAME = c:\pw_work\pwidot\halsteadtw\dms49753\78049-xs-sheet81511.dgn	USER NAME = halsteadtw	DESIGNED -	REVISED -
		DRAWN -	REVISED -
	PLOT SCALE = 5.0000 ' / in.	CHECKED -	REVISED -
	PLOT DATE = 10/18/2011	DATE -	REVISED -

STATE OF ILLINOIS
DEPARTMENT OF TRANSPORTATION

IL RTE. 4

SCALE: | SHEET OF SHEETS | STA. 1108+50.00 TO STA. 1109+50.00

F.A.P. RTE.	SECTION	COUNTY	TOTAL SHEETS	SHEET NO.
686	114B-1	JACKSON	114	26

CONTRACT NO. 78049

ILLINOIS FED. AID PROJECT

FINAL SURVEY		BY	DATE
	SURVEYED		
	PLOTTED		
	TEMPLATE		
NOTE BOOK	AREAS		
NO.	AREAS CHECKED		

ORIGINAL SURVEY		BY	DATE
	SURVEYED		
	PLOTTED		
	TEMPLATE		
NOTE BOOK	AREAS		
NO.	AREAS CHECKED		

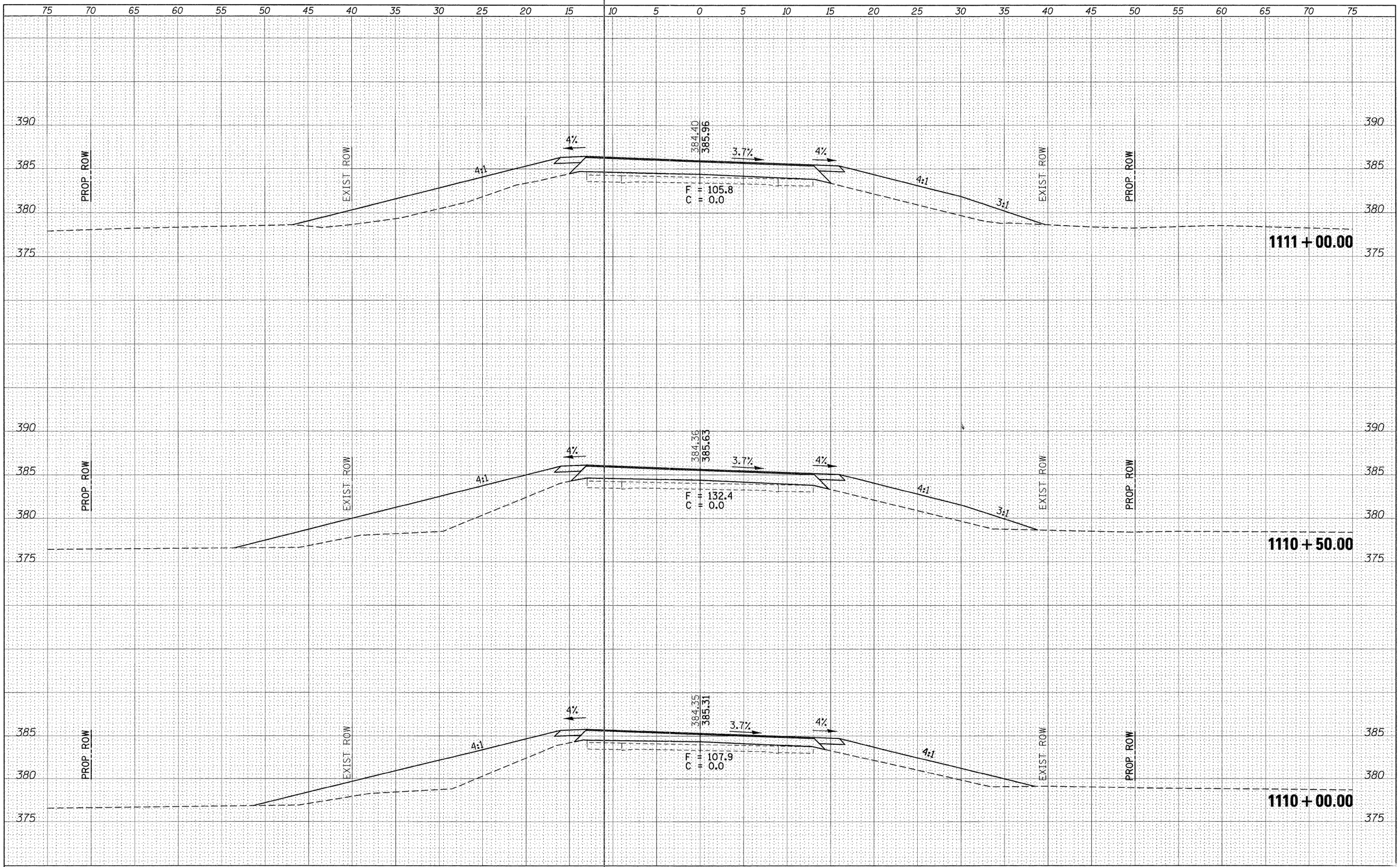

FINAL SURVEY	BY	DATE
SURVEYED		
PLOTTED		
TEMPLATE		
AREAS		
AREAS CHECKED		
NOTE BOOK NO.		

ORIGINAL SURVEY	BY	DATE
SURVEYED		
PLOTTED		
TEMPLATE		
AREAS		
AREAS CHECKED		
NOTE BOOK NO.		

FILE NAME = c:\pw_work\pwidot\halsteadtw\dms49753\78049-xs sheet81611.dgn	USER NAME = halsteadtw	DESIGNED -	REVISED -
		DRAWN -	REVISED -
	PLOT SCALE = 5.0000 ' / in.	CHECKED -	REVISED -
	PLOT DATE = 10/18/2011	DATE -	REVISED -

STATE OF ILLINOIS
DEPARTMENT OF TRANSPORTATION

IL RTE. 4

SCALE: | SHEET OF SHEETS | STA. 1110+00.00 TO STA. 1111+00.00

F.A.P. RTE.	SECTION	COUNTY	TOTAL SHEETS	SHEET NO.
686	114B-1	JACKSON	114	27

CONTRACT NO. 78049

ILLINOIS FED. AID PROJECT

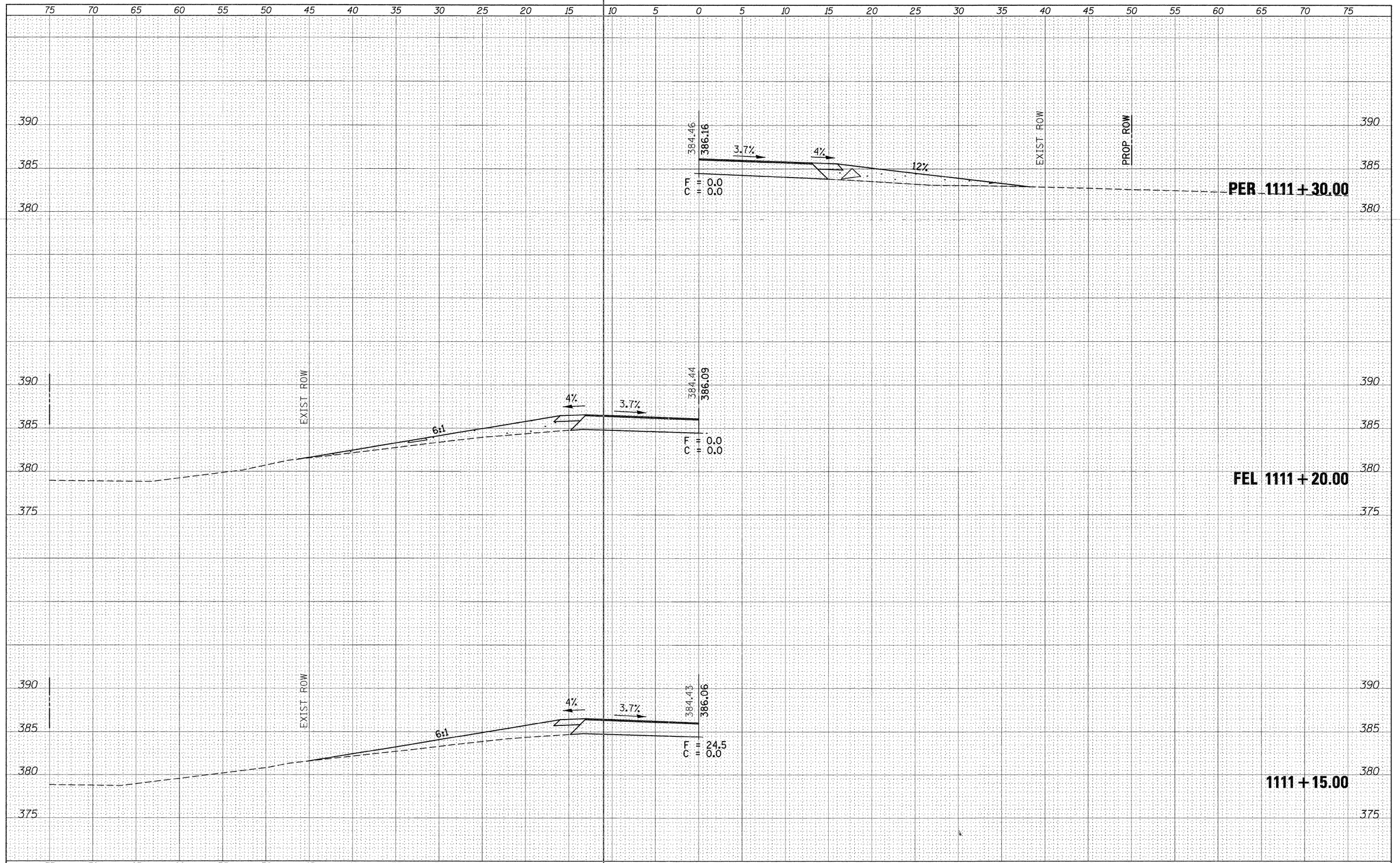

FINAL SURVEY	BY	DATE
SURVEYED		
PLOTTED		
TRAVERSE		
NOTE BOOK		
AREAS		
AREAS CHECKED		
NO.		

ORIGINAL SURVEY	BY	DATE
SURVEYED		
PLOTTED		
TRAVERSE		
NOTE BOOK		
AREAS		
AREAS CHECKED		
NO.		

FILE NAME = c:\pw_work\pwidot\halsteadtw\dms49753\78049-xs-sheet8161l.dgn	USER NAME = halsteadtw	DESIGNED -	REVISED -
		DRAWN -	REVISED -
	PLOT SCALE = 5.0000 ' / in.	CHECKED -	REVISED -
	PLOT DATE = 10/18/2011	DATE -	REVISED -

STATE OF ILLINOIS
DEPARTMENT OF TRANSPORTATION

IL RTE. 4

SCALE: | SHEET OF SHEETS | STA. 1111+15.00 TO STA. 1111+30.00

F.A.P. RTE.	SECTION	COUNTY	TOTAL SHEETS	SHEET NO.
686	114B-1	JACKSON	114	28

CONTRACT NO. 78049

ILLINOIS FED. AID PROJECT

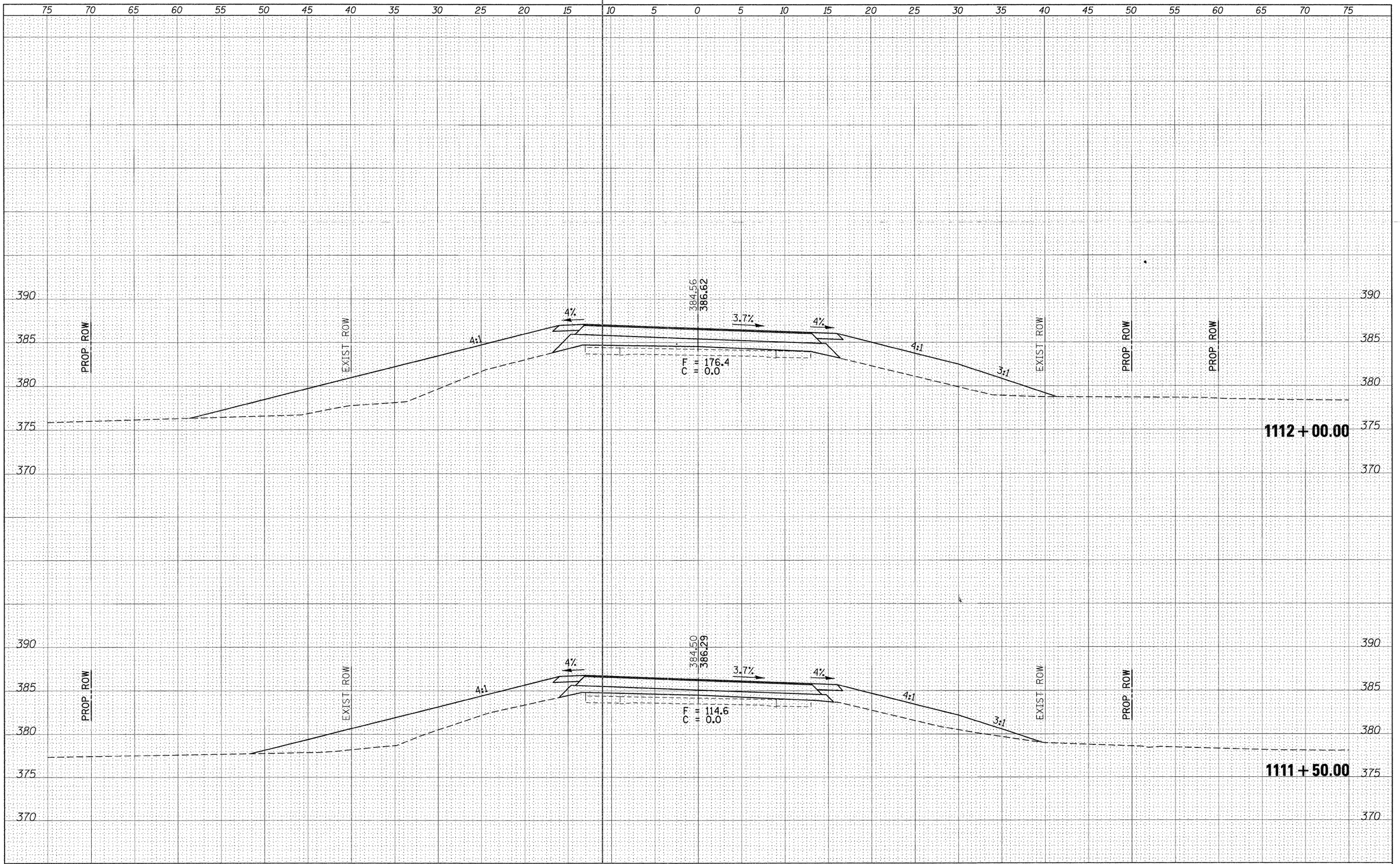

FINAL SURVEY		BY	DATE
SURVEYED			
PLOTTED			
TEMPLATE			
AREAS			
AREAS CHECKED			
NOTE BOOK			
NO.			

ORIGINAL SURVEY		BY	DATE
SURVEYED			
PLOTTED			
TEMPLATE			
AREAS			
AREAS CHECKED			
NOTE BOOK			
NO.			

FILE NAME = c:\pw_work\pwidot\halsteadtw\dms49753\78049-xsrsheet81611.dgn	USER NAME = halsteadtw	DESIGNED -	REVISED -
		DRAWN -	REVISED -
	PLOT SCALE = 5.0000 ' / in.	CHECKED -	REVISED -
	PLOT DATE = 10/18/2011	DATE -	REVISED -

STATE OF ILLINOIS
DEPARTMENT OF TRANSPORTATION

IL RTE. 4

SCALE: | SHEET OF SHEETS | STA. 1111+50.00 TO STA. 1112+00.00

F.A.P RTE.	SECTION	COUNTY	TOTAL SHEETS	SHEET NO.
686	114B-1	JACKSON	114	29

CONTRACT NO. 78049

ILLINOIS FED. AID PROJECT

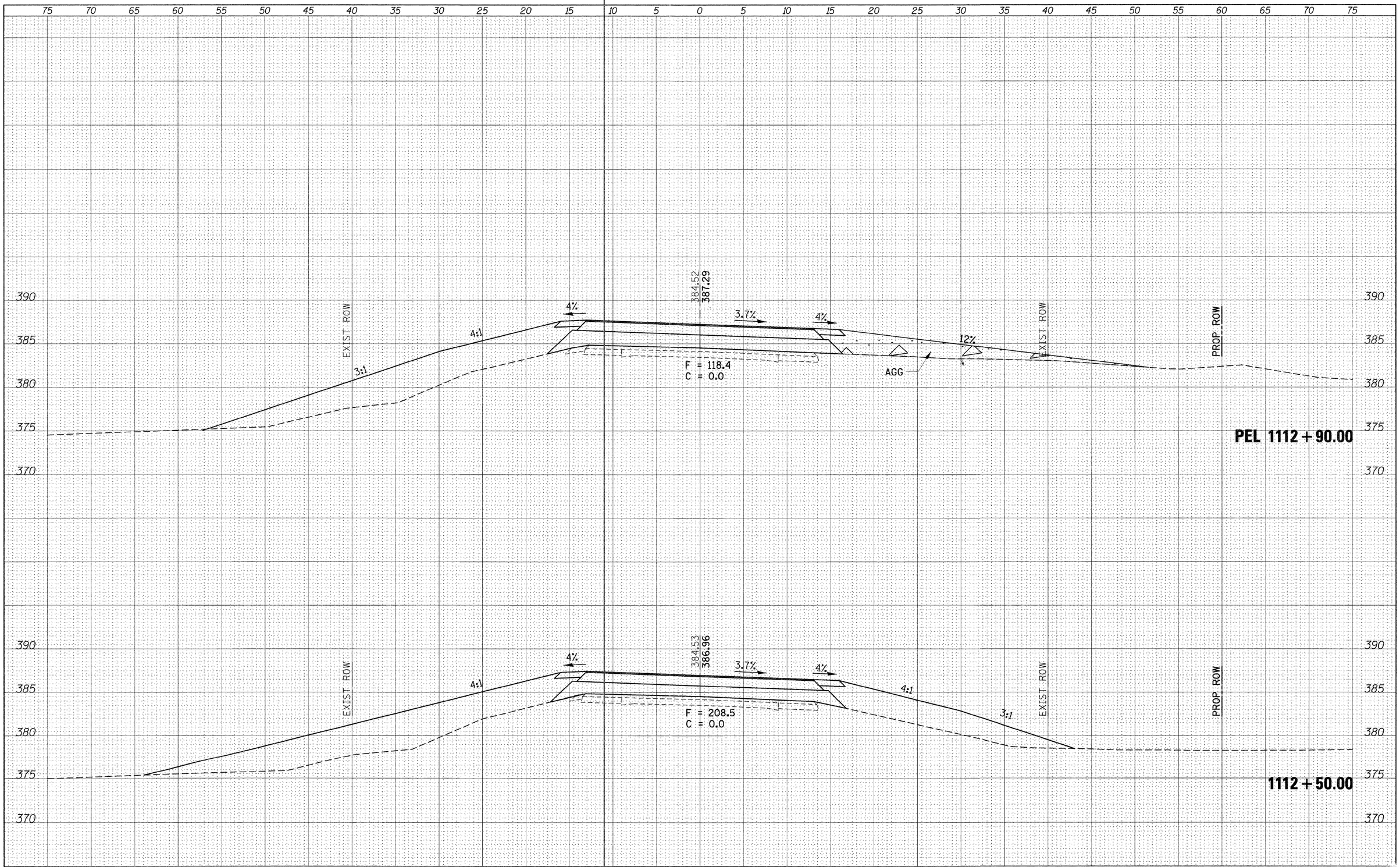

FINAL SURVEY		BY	DATE
NOTE BOOK	SURVEYED		
	PLOTTED		
	TEMPLATE		
	AREAS		
NO.	AREAS CHECKED		

ORIGINAL SURVEY		BY	DATE
NOTE BOOK	SURVEYED		
	PLOTTED		
	TEMPLATE		
	AREAS		
NO.	AREAS CHECKED		

FILE NAME = c:\pw_work\pwidot\halsteadtw\dms49753\78049-xs\sheet81611.dgn	USER NAME = halsteadtw	DESIGNED -	REVISED -
		DRAWN -	REVISED -
	PLOT SCALE = 5.0000 ' / in.	CHECKED -	REVISED -
	PLOT DATE = 10/16/2011	DATE -	REVISED -

STATE OF ILLINOIS
DEPARTMENT OF TRANSPORTATION

IL RTE. 4

SCALE: | SHEET OF SHEETS | STA. 1112+50.00 TO STA. 1112+90.00

F.A. RTE.	SECTION	COUNTY	TOTAL SHEETS	SHEET NO.
686	114B-1	JACKSON	114	30

CONTRACT NO. 78049

ILLINOIS FED. AID PROJECT

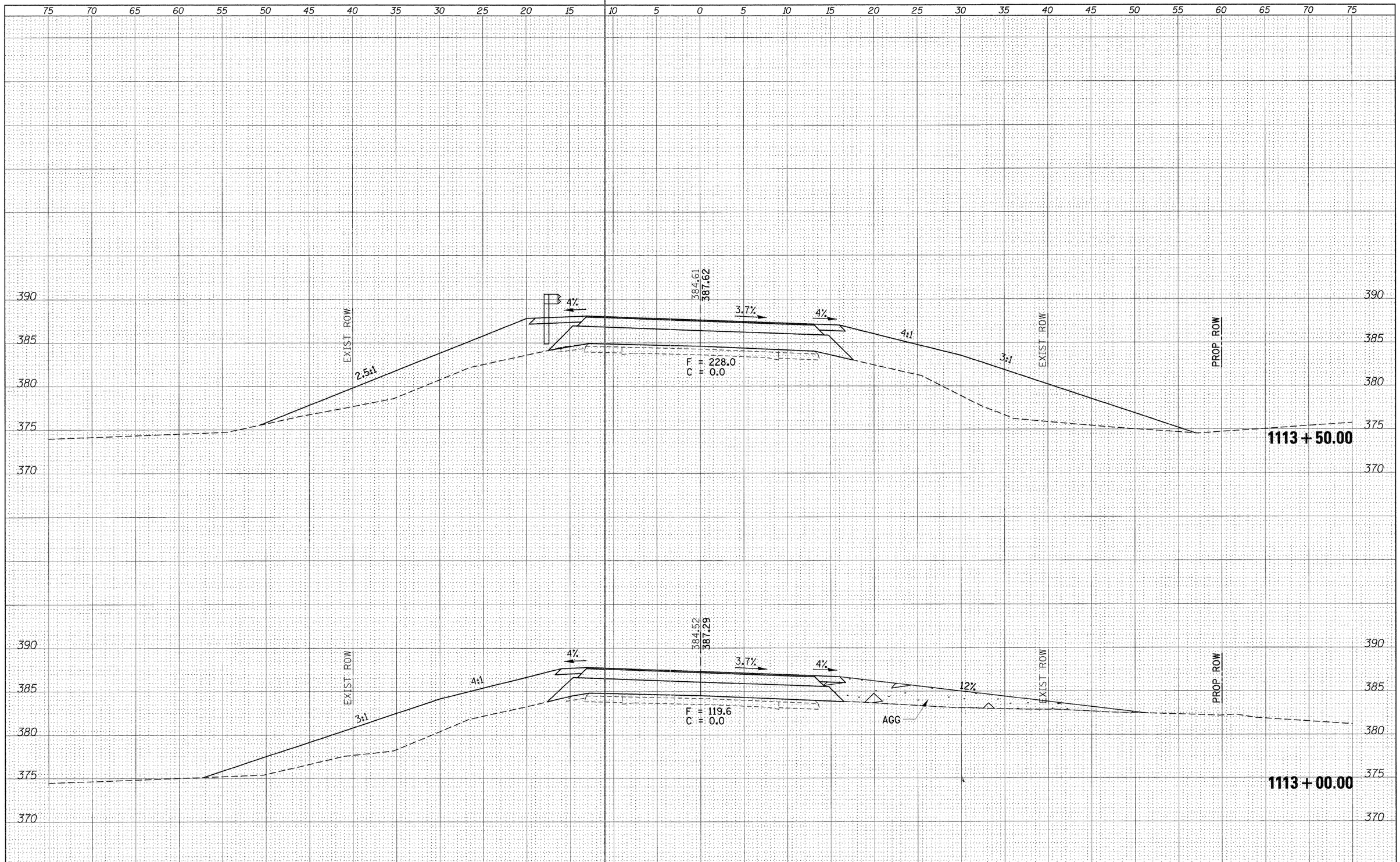

FINAL SURVEY	BY	DATE
SURVEYED		
PLOTTED		
TEMPLATE		
AREAS		
AREAS CHECKED		
NOTE BOOK NO.		

ORIGINAL SURVEY	BY	DATE
SURVEYED		
PLOTTED		
TEMPLATE		
AREAS		
AREAS CHECKED		
NOTE BOOK NO.		

FILE NAME = c:\pw_work\pwidot\halsteadtw\dms49753\78049-xs\sheet81611.dgn	USER NAME = halsteadtw	DESIGNED -	REVISED -
		DRAWN -	REVISED -
	PLOT SCALE = 5.0000 ' / in.	CHECKED -	REVISED -
	PLOT DATE = 10/18/2011	DATE -	REVISED -

STATE OF ILLINOIS
DEPARTMENT OF TRANSPORTATION

IL RTE. 4

SCALE: | SHEET OF SHEETS | STA. 1113+00.00 TO STA. 1113+50.00

F.A.P. RTE.	SECTION	COUNTY	TOTAL SHEETS	SHEET NO.
686	114B-1	JACKSON	114	31

CONTRACT NO. 78049

ILLINOIS FED. AID PROJECT

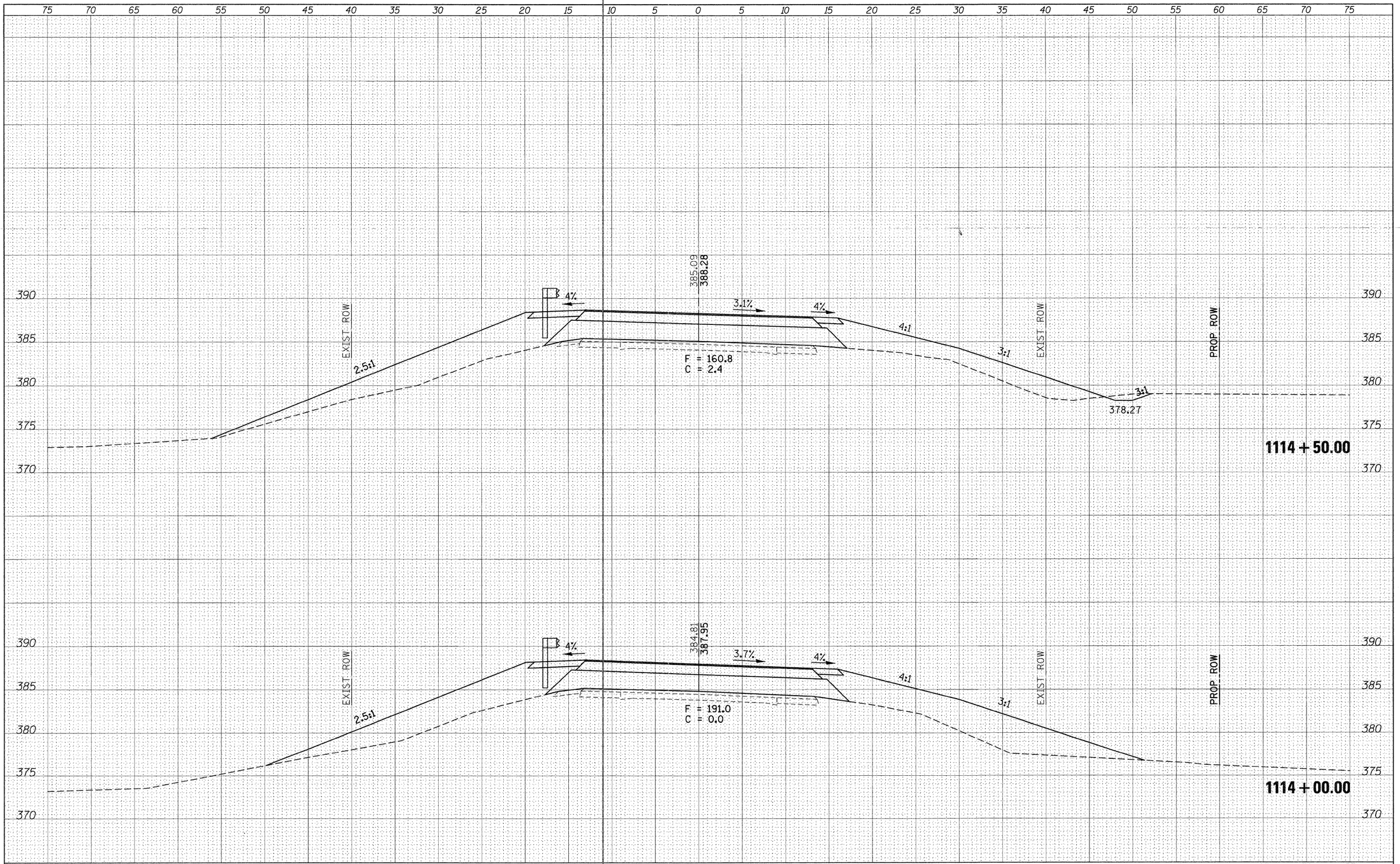

FILE NAME =	USER NAME = halsteadtw	DESIGNED -	REVISED -
c:\pw_work\pwidot\halsteadtw\dms49753\78049-xsheet81611.dgn		DRAWN -	REVISED -
	PLOT SCALE = 5.0000 ' / in.	CHECKED -	REVISED -
	PLOT DATE = 10/18/2011	DATE -	REVISED -

STATE OF ILLINOIS
DEPARTMENT OF TRANSPORTATION

IL RTE. 4

SCALE: | SHEET OF SHEETS | STA. 1114+00.00 TO STA. 1114+50.00

F.A.P. RTE.	SECTION	COUNTY	TOTAL SHEETS	SHEET NO.
686	114B-1	JACKSON	114	32

CONTRACT NO. 78049

ILLINOIS FED. AID PROJECT

FINAL SURVEY	BY	DATE
SURVEYED		
PLOTTED		
TEMPLATE		
AREAS		
AREAS CHECKED		
NOTE BOOK NO.		

ORIGINAL SURVEY	BY	DATE
SURVEYED		
PLOTTED		
TEMPLATE		
AREAS		
AREAS CHECKED		
NOTE BOOK NO.		

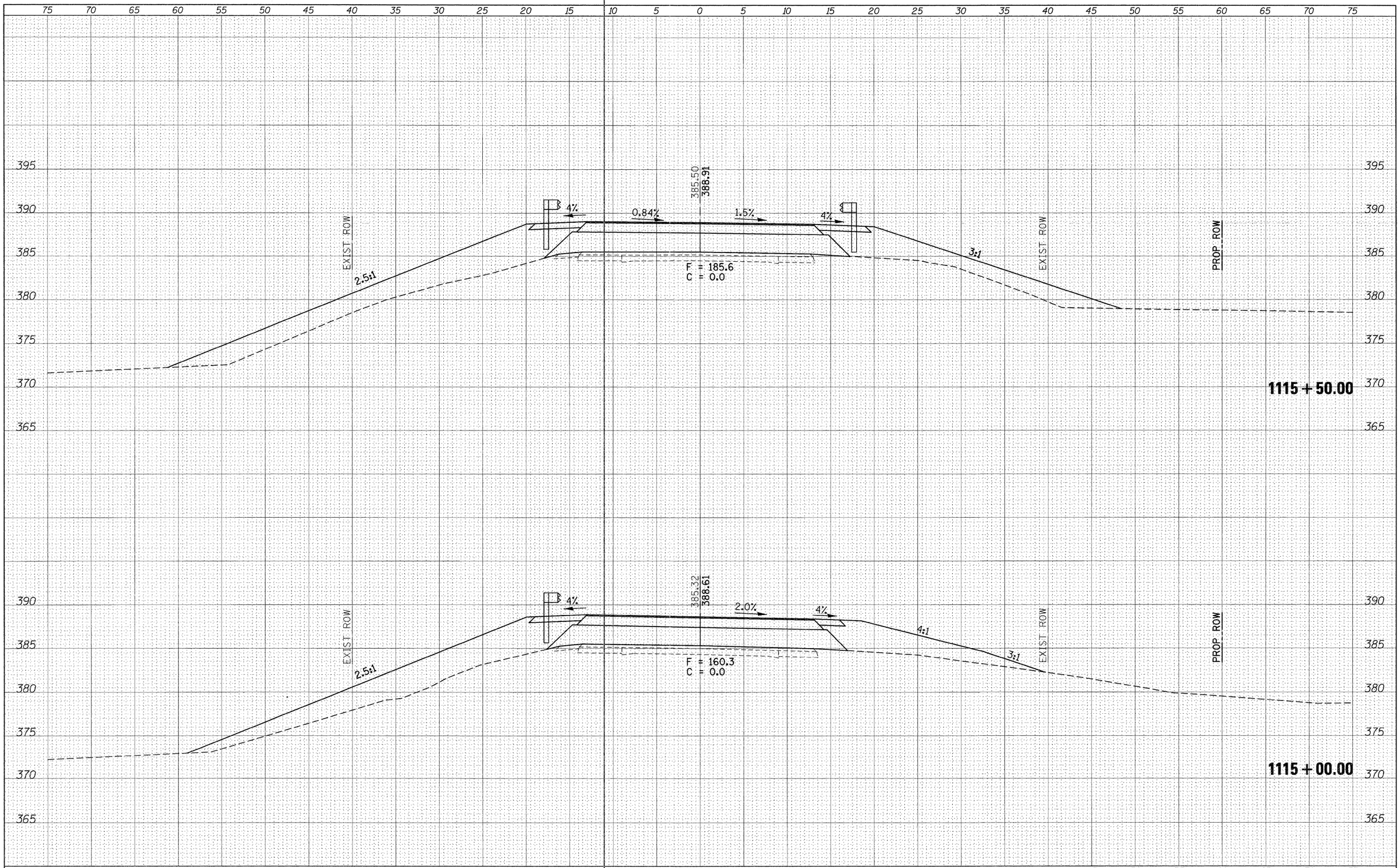

FINAL SURVEY	BY	DATE
SURVEYED		
PLOTTED		
TEMPLATE		
AREAS		
AREAS CHECKED		
NOTE BOOK		
NO.		

ORIGINAL SURVEY	BY	DATE
SURVEYED		
PLOTTED		
TEMPLATE		
AREAS		
AREAS CHECKED		
NOTE BOOK		
NO.		

FILE NAME = c:\pw_work\pwidot\halsteadtw\dms49753\78049-xs-sheet81611.dgn	USER NAME = halsteadtw	DESIGNED -	REVISED -
		DRAWN -	REVISED -
	PLOT SCALE = 5.0000 ' / in.	CHECKED -	REVISED -
	PLOT DATE = 10/18/2011	DATE -	REVISED -

STATE OF ILLINOIS
DEPARTMENT OF THANSPORTATION

IL RTE. 4

SCALE: | SHEET OF SHEETS | STA. 1115+00.00 TO STA. 1115+50.00

F.A.P. RTE.	SECTION	COUNTY	TOTAL SHEETS	SHEET NO.
686	114B-1	JACKSON	114	33

CONTRACT NO. 78049

ILLINOIS FED. AID PROJECT

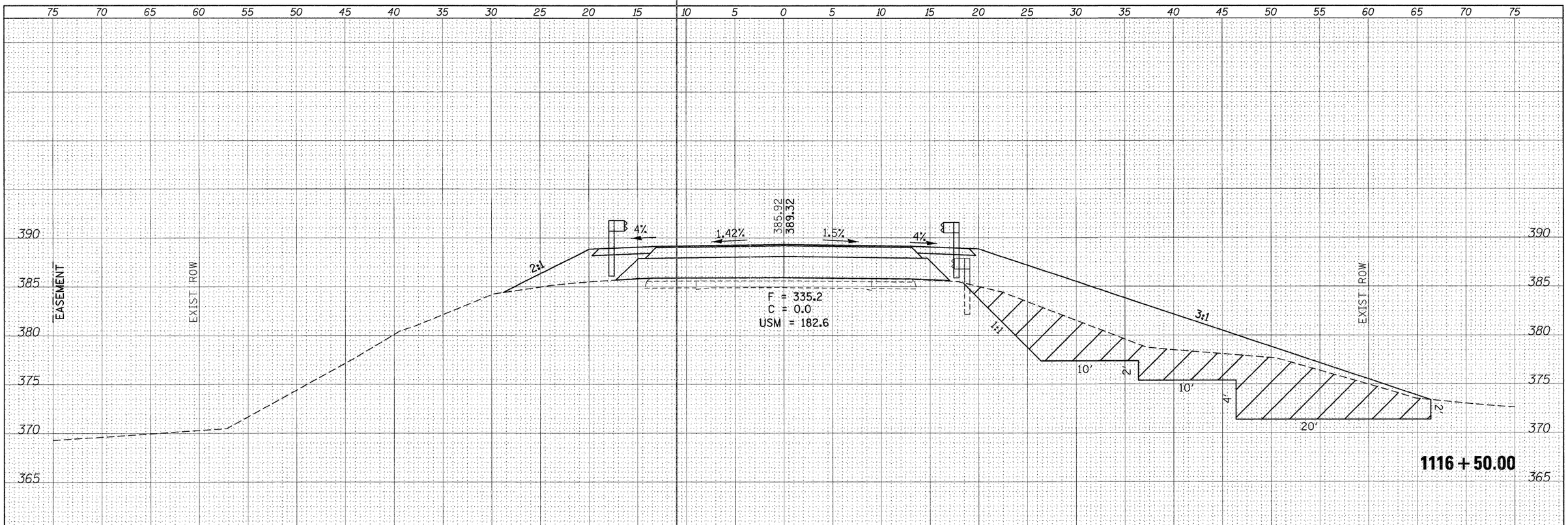

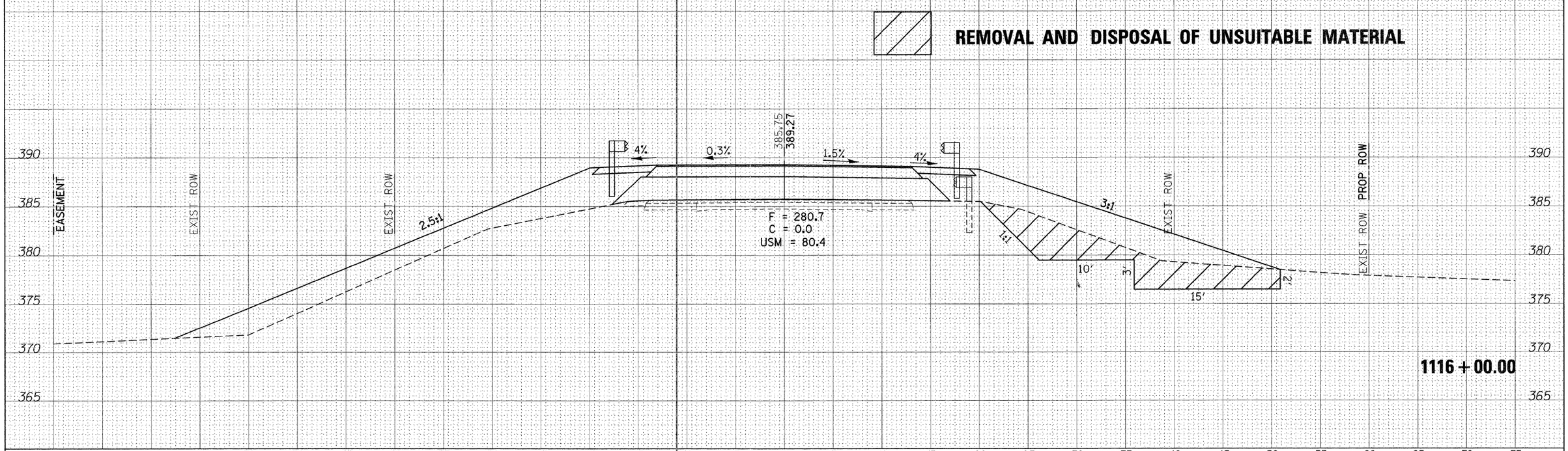

FILE NAME = c:\pw_work\pwidot\halsteadtw\dms49753\78049-xssheet81611.dgn	USER NAME = halsteadtw	DESIGNED -	REVISED -	STATE OF ILLINOIS DEPARTMENT OF TRANSPORTATION	IL RTE. 4	F.A. RTE.	SECTION	COUNTY	TOTAL SHEETS	SHEET NO.
	PLOT SCALE = 5.0000 ' / in.	CHECKED -	REVISED -			686	114B-1	JACKSON	114	34
	PLOT DATE = 10/18/2011	DATE -	REVISED -		SCALE: SHEET OF SHEETS STA. 1116+00.00 TO STA. 1116+50.00			CONTRACT NO. 78049		
								ILLINOIS FED. AID PROJECT		

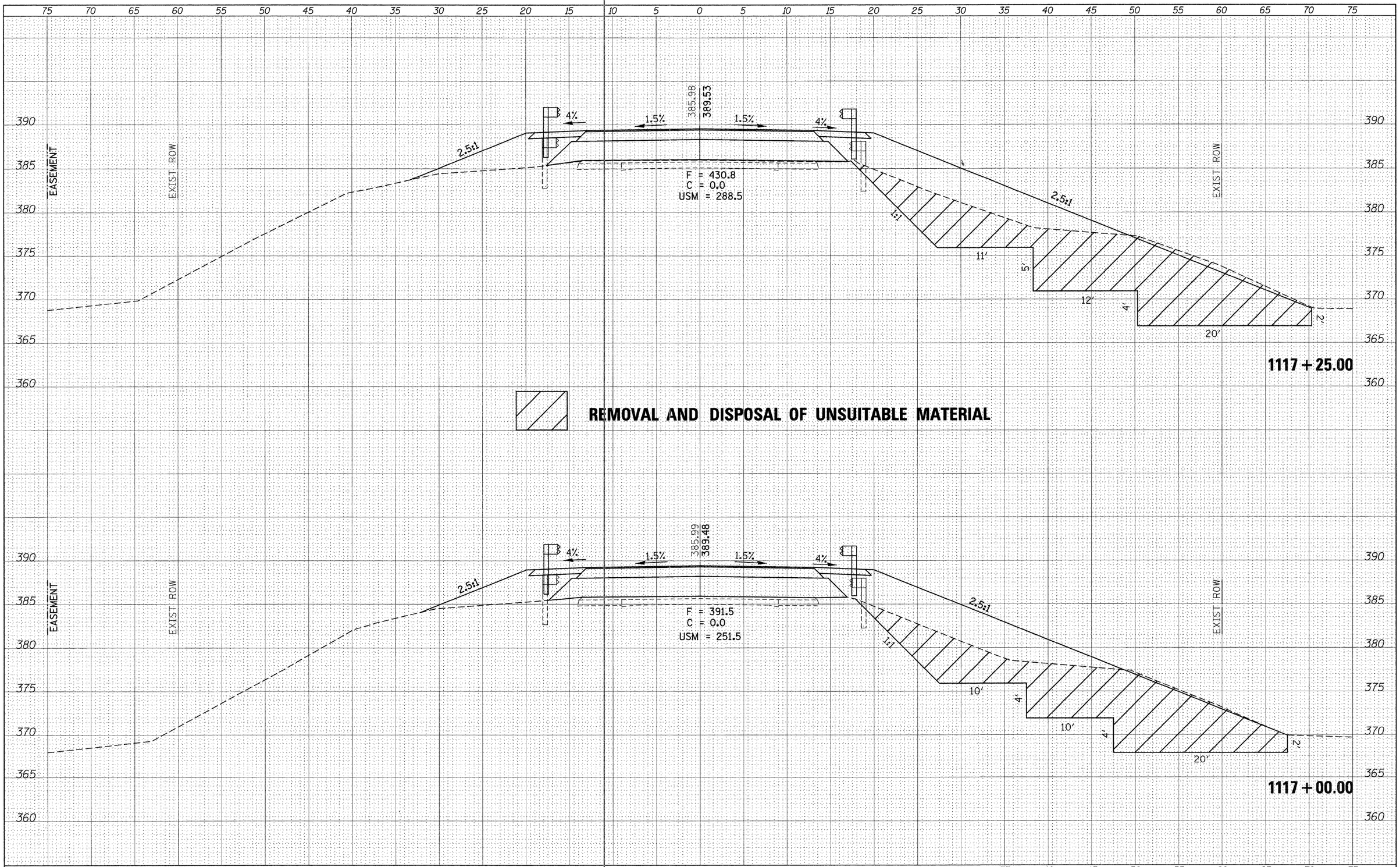

FINAL SURVEY	BY	DATE
SURVEYED		
PLOTTED		
TEMPLATE		
AREAS		
AREAS CHECKED		
NOTE BOOK NO.		

ORIGINAL SURVEY	BY	DATE
SURVEYED		
PLOTTED		
TEMPLATE		
AREAS		
AREAS CHECKED		
NOTE BOOK NO.		

FILE NAME = c:\pw_work\pwidot\halsteadtw\dms49753\78049-xs-sheet81611.dgn	USER NAME = halsteadtw	DESIGNED -	REVISED -
		DRAWN -	REVISED -
	PLOT SCALE = 5.0000 ' / in.	CHECKED -	REVISED -
	PLOT DATE = 10/18/2011	DATE -	REVISED -

STATE OF ILLINOIS
DEPARTMENT OF TRANSPORTATION

IL RTE. 4

SCALE: | SHEET OF SHEETS | STA. 1117+00.00 TO STA. 1117+25.00

F.A.P. RTE.	SECTION	COUNTY	TOTAL SHEETS	SHEET NO.
686	114B-1	JACKSON	114	35

CONTRACT NO. 78049

ILLINOIS FED. AID PROJECT

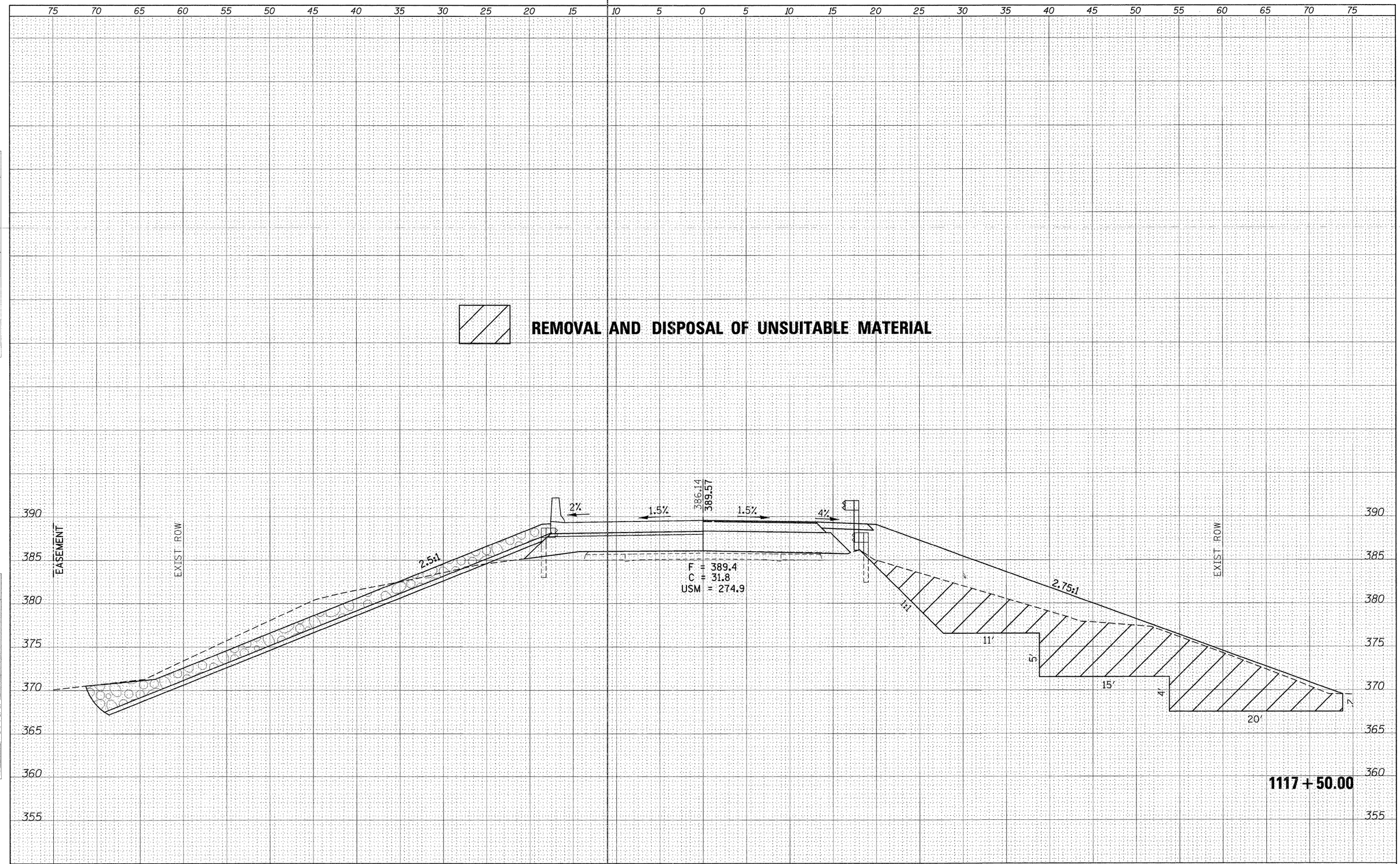

FILE NAME = c:\pw_work\pwidot\halsteadtw\dms49753\78049-xs-sheet8161I.dgn	USER NAME = halsteadtw	DESIGNED -	REVISED -
		DRAWN -	REVISED -
	PLOT SCALE = 5.0000 ' / in.	CHECKED -	REVISED -
	PLOT DATE = 10/18/2011	DATE -	REVISED -

STATE OF ILLINOIS
DEPARTMENT OF TRANSPORTATION

SCALE: | SHEET OF SHEETS | STA. 1117+50.00 TO STA. 1117+50.00

F.A.P. RTE.	SECTION	COUNTY	TOTAL SHEETS	SHEET NO.
686	114B-1	JACKSON	114	36
		CONTRACT NO. 78049		
		ILLINOIS FED. AID PROJECT		

FINAL SURVEY — NOTE BOOK NO. — SURVEYED — PLOTTED — TEMPLATE — AREAS — AREAS CHECKED — BY — DATE

ORIGINAL SURVEY — NOTE BOOK NO. — SURVEYED — PLOTTED — TEMPLATE — AREAS — AREAS CHECKED — BY — DATE

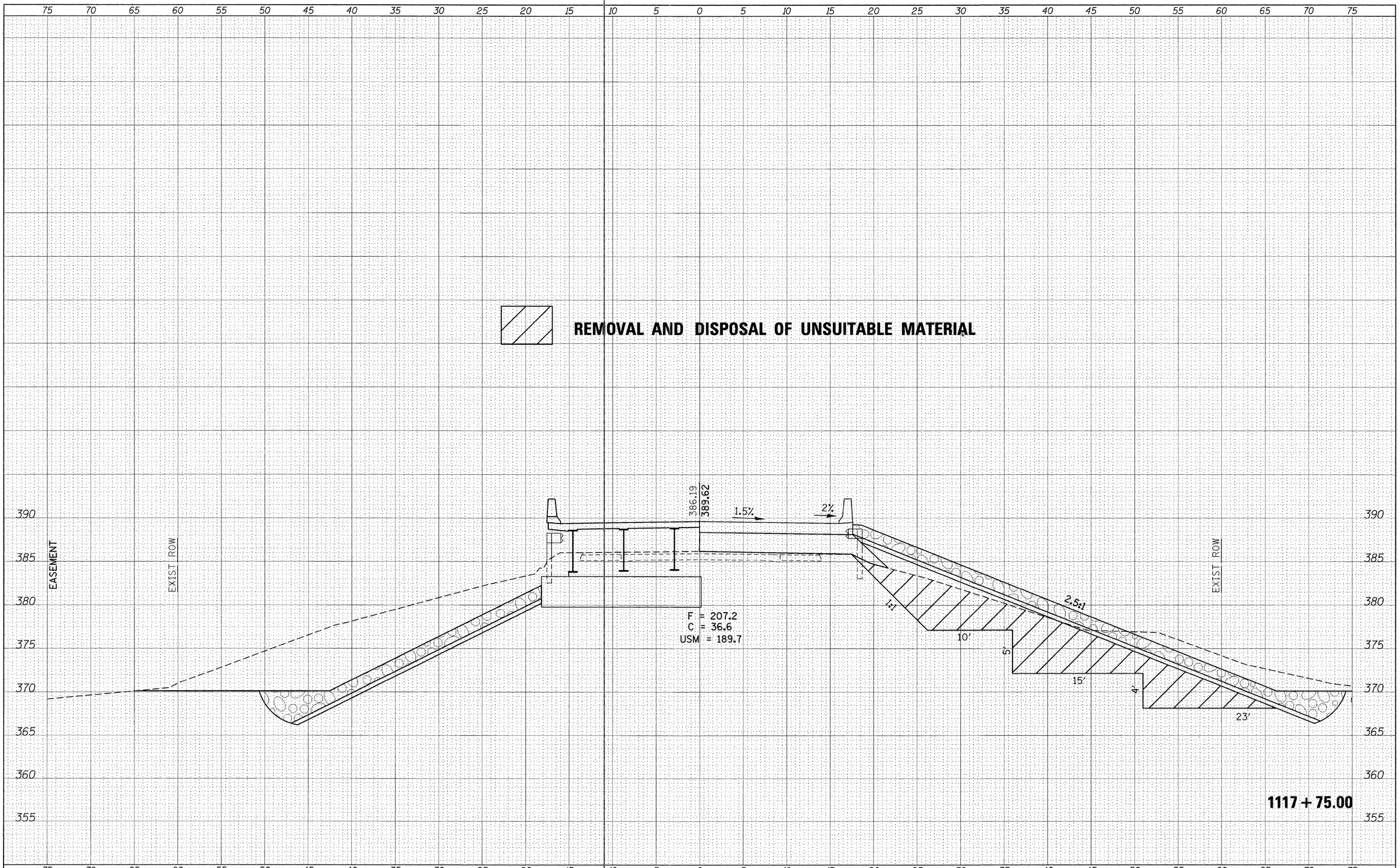

FILE NAME =	USER NAME = halsteadtw	DESIGNED -	REVISED -
c:\pw_work\pwidot\halsteadtw\dms49753\78049-xs\sheet81611.dgn		DRAWN -	REVISED -
	PLOT SCALE = 5.0000 ' / in.	CHECKED -	REVISED -
	PLOT DATE = 10/18/2011	DATE -	REVISED -

STATE OF ILLINOIS
DEPARTMENT OF TRANSPORTATION

IL RTE. 4

SCALE: | SHEET OF SHEETS | STA. 1117+75.00 TO STA. 1117+75.00

F.A.P RTE.	SECTION	COUNTY	TOTAL SHEETS	SHEET NO.
686	114B-1	JACKSON	114	37

CONTRACT NO. 78049

ILLINOIS FED. AID PROJECT

FINAL SURVEY — NOTE BOOK NO. — SURVEYED — PLOTTED — TEMPLATE — AREAS — AREAS CHECKED — BY — DATE

ORIGINAL SURVEY — NOTE BOOK NO. — SURVEYED — PLOTTED — TEMPLATE — AREAS — AREAS CHECKED — BY — DATE

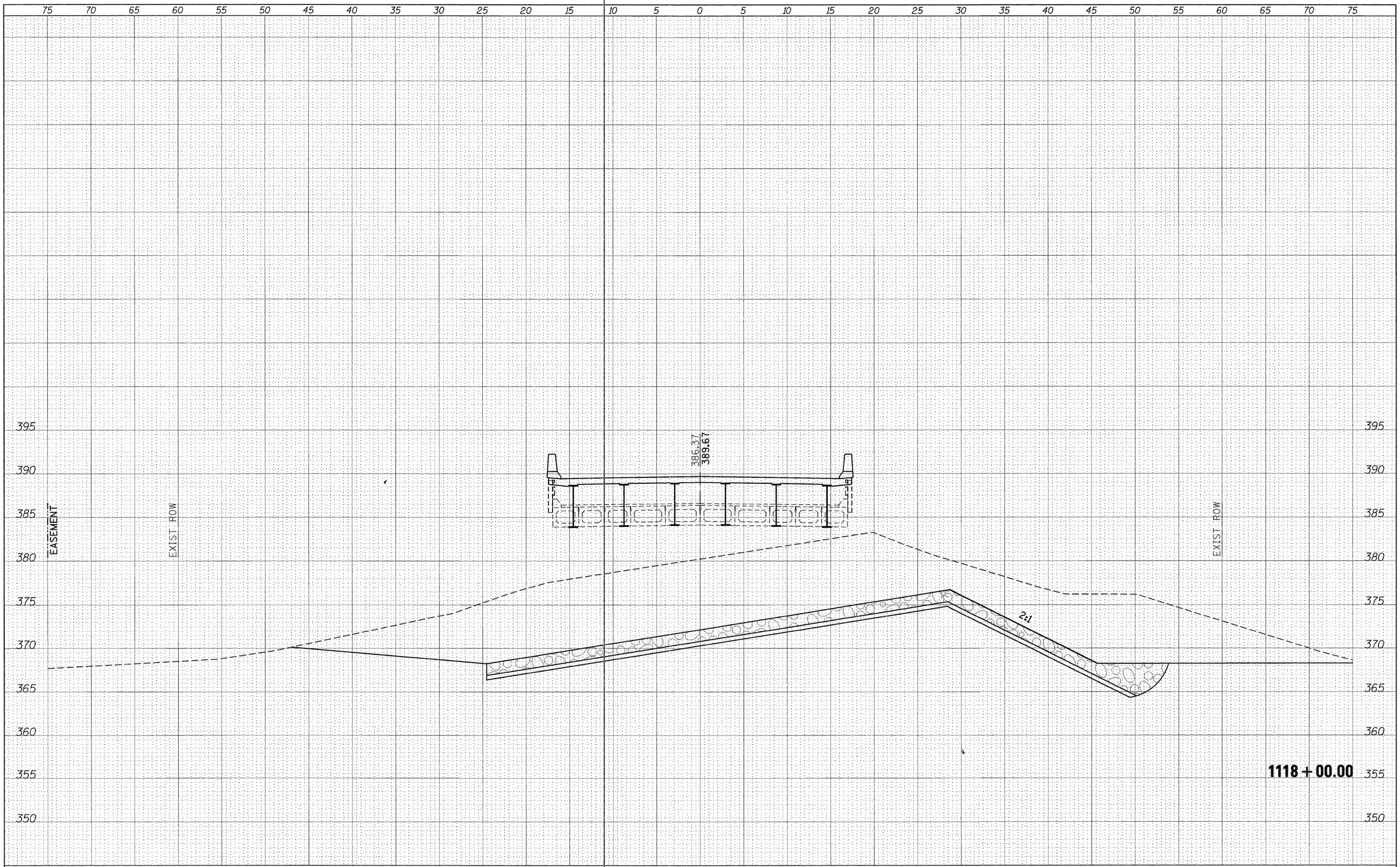

FINAL SURVEY	BY	DATE
SURVEYED		
PLOTTED		
TEMPLATE		
AREAS		
AREAS CHECKED		
NOTE BOOK NO.		

ORIGINAL SURVEY	BY	DATE
SURVEYED		
PLOTTED		
TEMPLATE		
AREAS		
AREAS CHECKED		
NOTE BOOK NO.		

FILE NAME = c:\pw_work\pwidot\halsteadtw\dms49753\78049-xs-sheet81611.dgn	USER NAME = halsteadtw	DESIGNED -	REVISED -
		DRAWN -	REVISED -
	PLOT SCALE = 5.0000 ' / in.	CHECKED -	REVISED -
	PLOT DATE = 10/18/2011	DATE -	REVISED -

STATE OF ILLINOIS
DEPARTMENT OF TRANSPORTATION

IL RTE. 4

SCALE: | SHEET OF SHEETS | STA. 1118+00.00 TO STA. 1118+00.00

F.A.P RTE.	SECTION	COUNTY	TOTAL SHEETS	SHEET NO.
686	114B-1	JACKSON	114	38

CONTRACT NO. 78049

ILLINOIS FED. AID PROJECT

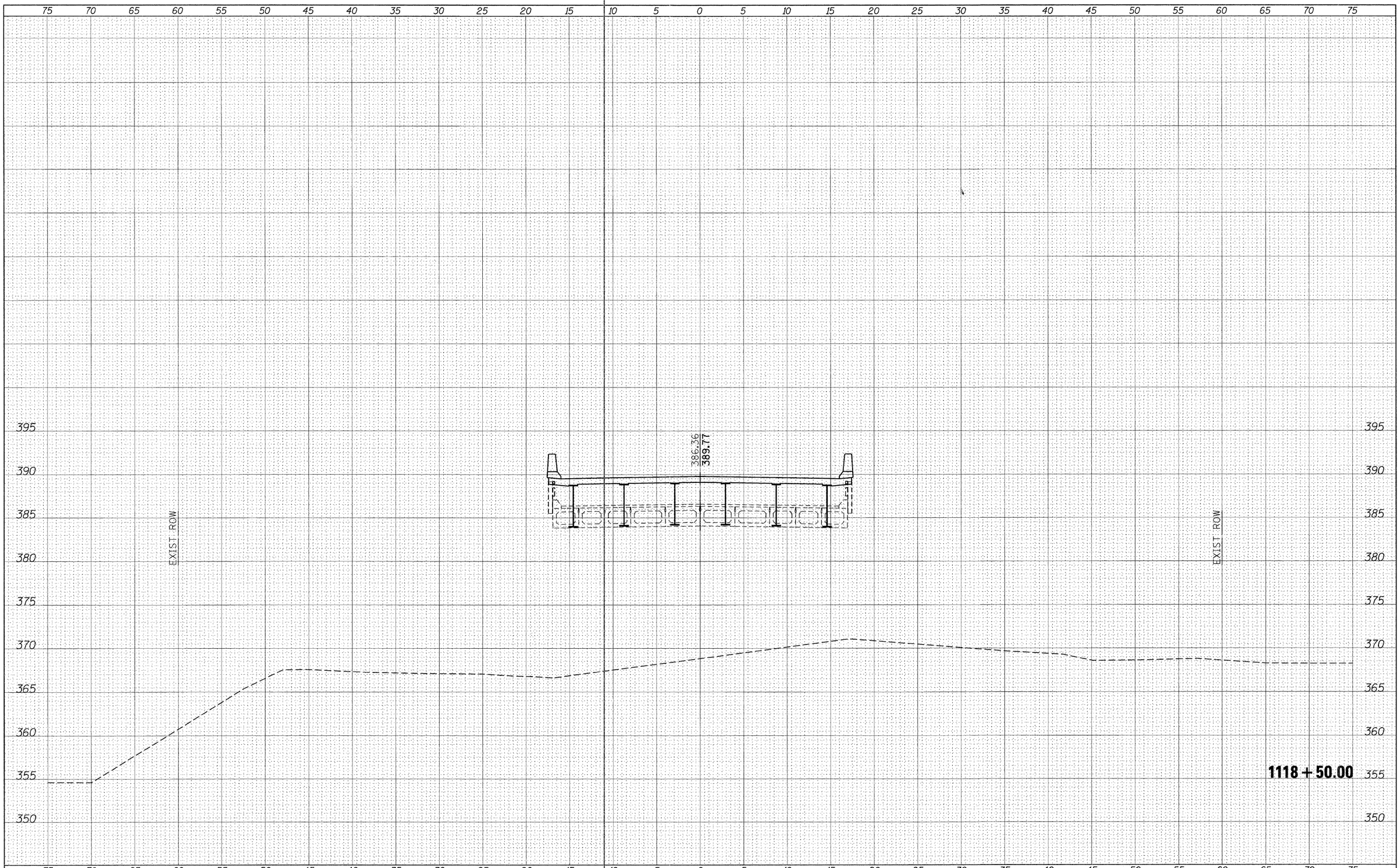

FINAL SURVEY	BY	DATE
SURVEYED		
PLOTTED		
TEMPLATE		
AREAS		
AREAS CHECKED		
NOTE BOOK NO.		

ORIGINAL SURVEY	BY	DATE
SURVEYED		
PLOTTED		
TEMPLATE		
AREAS		
AREAS CHECKED		
NOTE BOOK NO.		

FILE NAME = c:\pw_work\pwidot\halsteadtw\dms49753\78049-xs-sheet81611.dgn	USER NAME = halsteadtw	DESIGNED -	REVISED -
		DRAWN -	REVISED -
	PLOT SCALE = 5.0000 ' / in.	CHECKED -	REVISED -
	PLOT DATE = 10/18/2011	DATE -	REVISED -

STATE OF ILLINOIS
DEPARTMENT OF TRANSPORTATION

IL RTE. 4

SCALE: | SHEET OF SHEETS | STA. 1118+50.00 TO STA. 1118+50.00

F.A.P RTE.	SECTION	COUNTY	TOTAL SHEETS	SHEET NO.
686	114B-1	JACKSON	114	39

CONTRACT NO. 78049

ILLINOIS FED. AID PROJECT

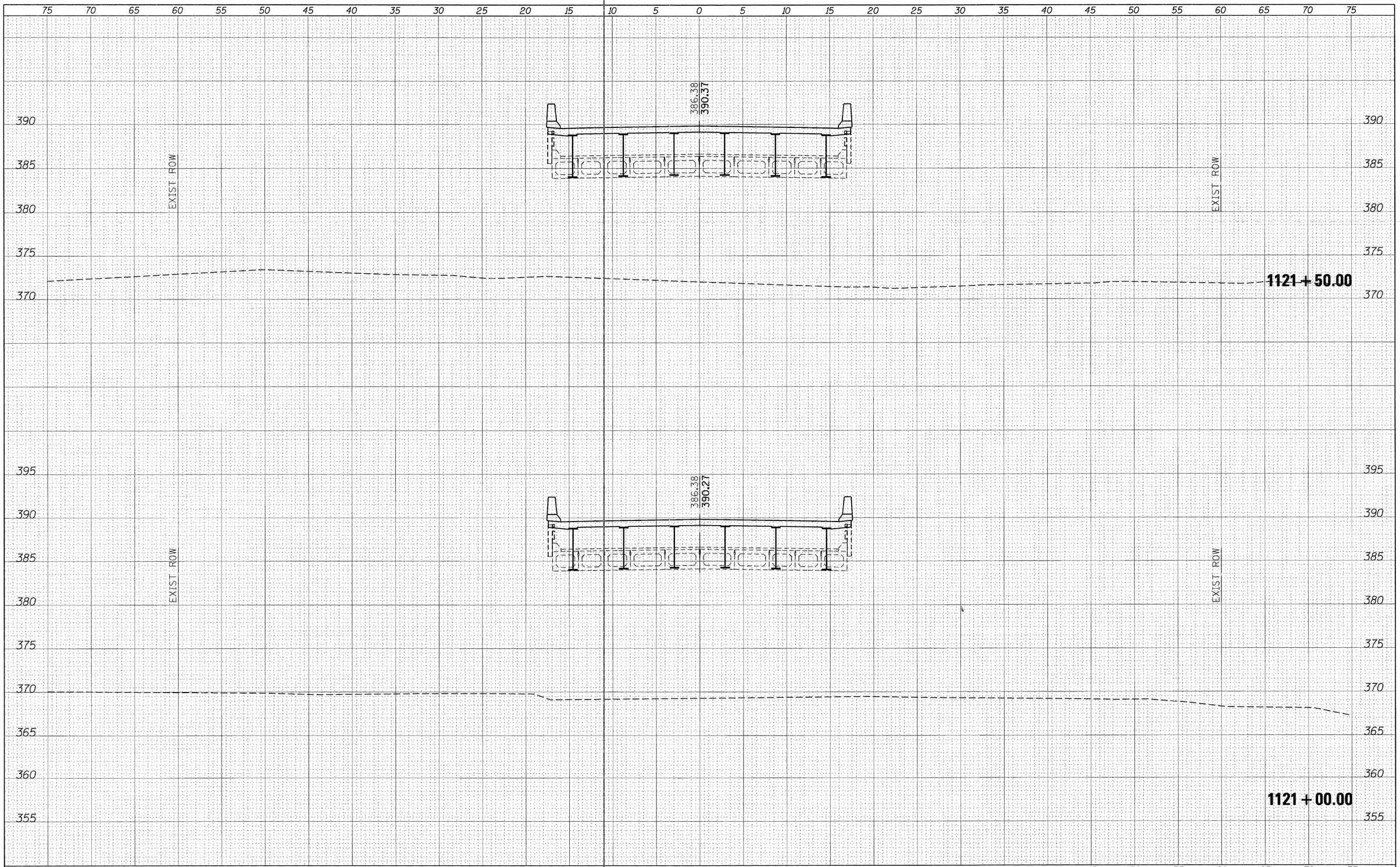

FINAL SURVEY	BY	DATE
SURVEYED		
PLOTTED		
TEMPLATE		
AREAS		
AREAS CHECKED		
NOTE BOOK NO.		

ORIGINAL SURVEY	BY	DATE
SURVEYED		
PLOTTED		
TEMPLATE		
AREAS		
AREAS CHECKED		
NOTE BOOK NO.		

FILE NAME = c:\pw_work\pwidot\halsteadtw\dms49753\78049-xs-sheet81611.dgn	USER NAME = halsteadtw	DESIGNED -	REVISED -
		DRAWN -	REVISED -
	PLOT SCALE = 5.0000 ' / in.	CHECKED -	REVISED -
	PLOT DATE = 10/18/2011	DATE -	REVISED -

STATE OF ILLINOIS
DEPARTMENT OF TRANSPORTATION

IL RTE. 4

SCALE: | SHEET OF SHEETS | STA. 1121+00.00 TO STA. 1121+50.00

F.A.P RTE.	SECTION	COUNTY	TOTAL SHEETS	SHEET NO.
686	114B-1	JACKSON	114	40

CONTRACT NO. 78049

ILLINOIS FED. AID PROJECT

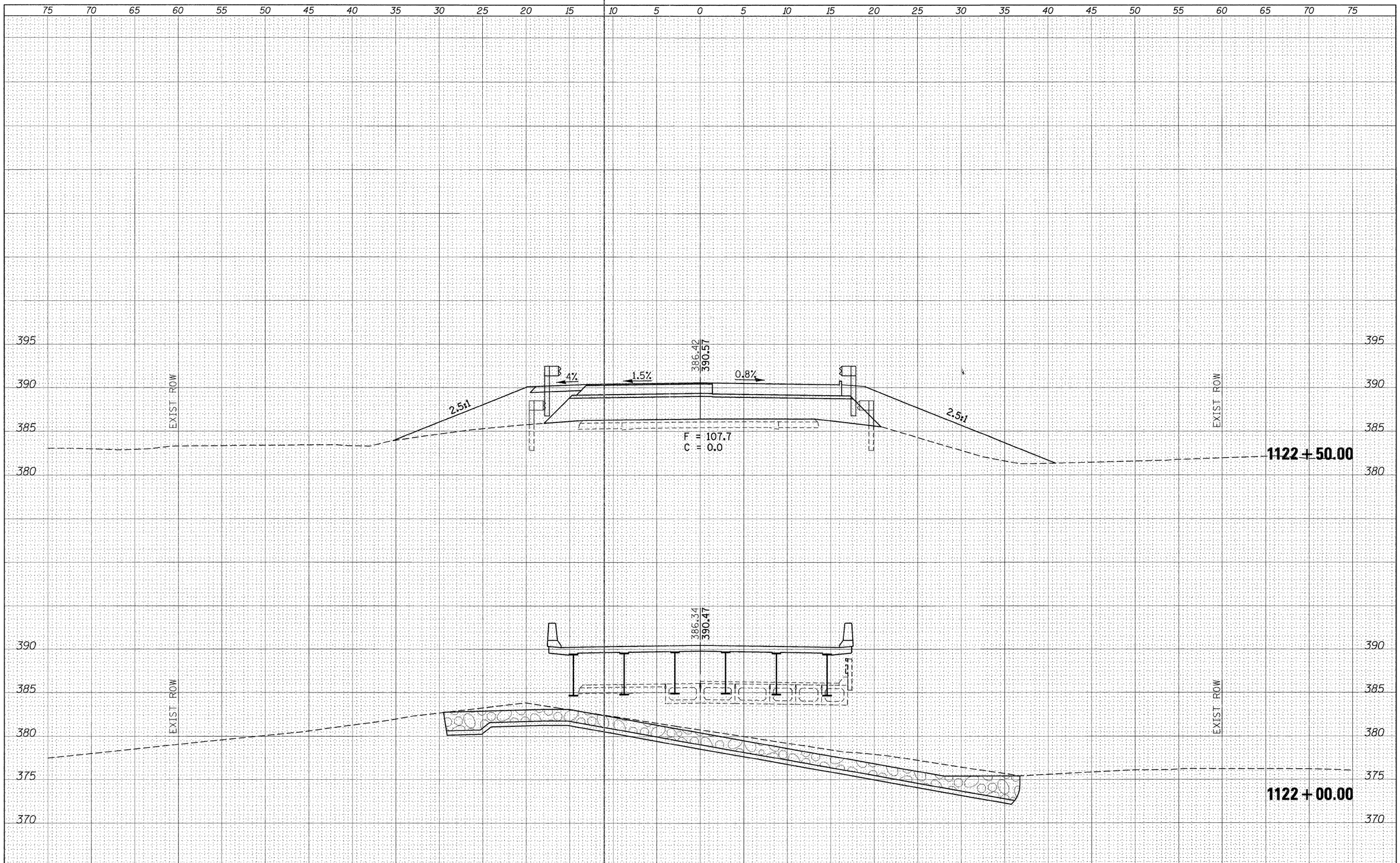

FINAL SURVEY		BY	DATE
NOTE BOOK NO.	SURVEYED		
	PLOTTED		
	TEMPLATE		
	AREAS		
	AREAS CHECKED		

ORIGINAL SURVEY		BY	DATE
NOTE BOOK NO.	SURVEYED		
	PLOTTED		
	TEMPLATE		
	AREAS		
	AREAS CHECKED		

FILE NAME = c:\pw_work\pwidot\halsteadtw\dms49753\78049-xs1sheet51611.dgn	USER NAME = halsteadtw	DESIGNED -	REVISED -
		DRAWN -	REVISED -
	PLOT SCALE = 5.0000 ' / in.	CHECKED -	REVISED -
	PLOT DATE = 10/18/2011	DATE -	REVISED -

STATE OF ILLINOIS
DEPARTMENT OF TRANSPORTATION

IL RTE. 4

SCALE: | SHEET OF SHEETS | STA. 1122+00.00 TO STA. 1122+50.00

F.A.P. RTE.	SECTION	COUNTY	TOTAL SHEETS	SHEET NO.
686	114B-1	JACKSON	114	41
		CONTRACT NO. 78049		
		ILLINOIS FED. AID PROJECT		

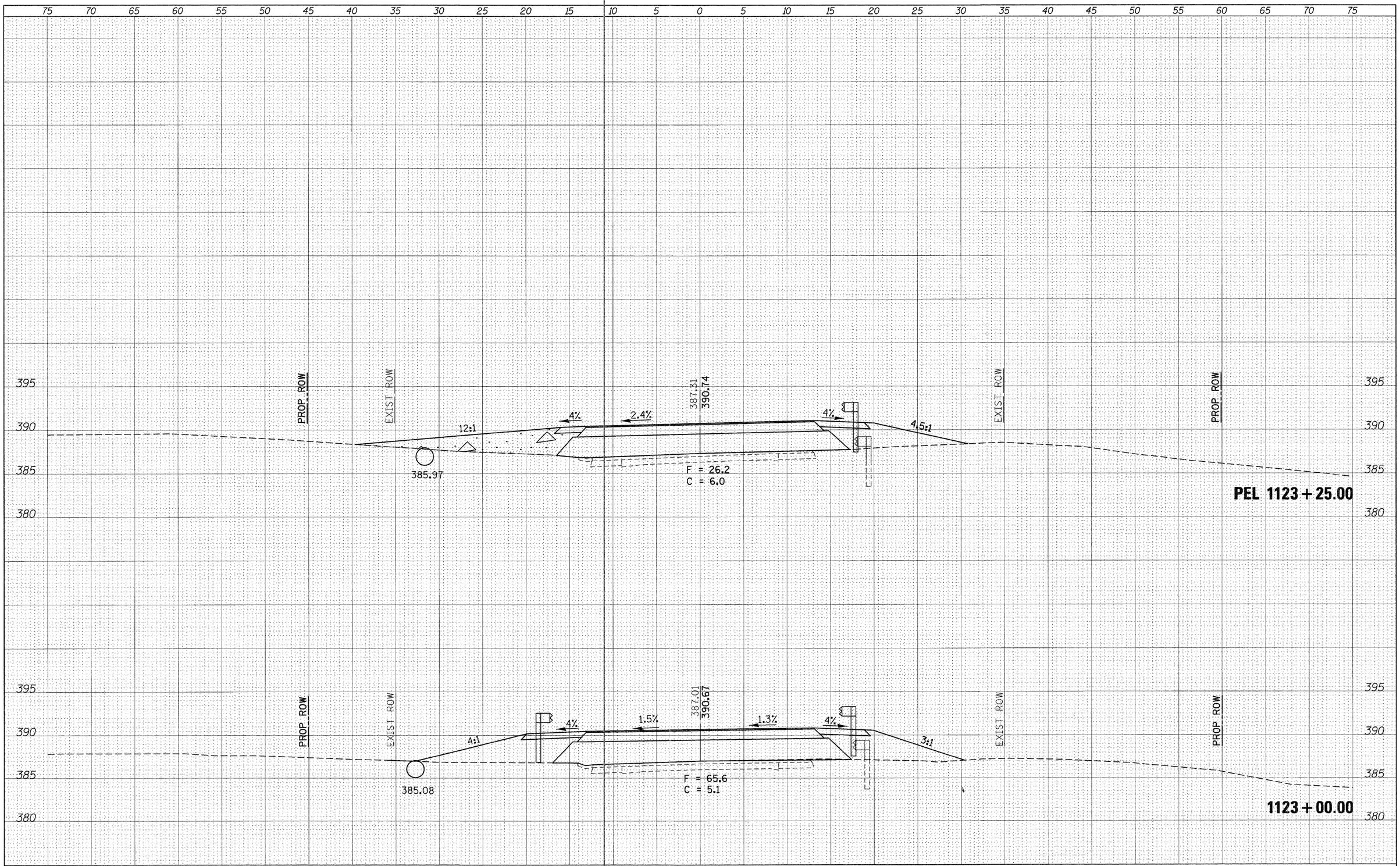

FILE NAME = c:\pw_work\pwidot\halsteadtw\dms49753\78049-xs sheet81611.dgn	USER NAME = halsteadtw	DESIGNED -	REVISED -
		DRAWN -	REVISED -
	PLOT SCALE = 5.0000 ' / in.	CHECKED -	REVISED -
	PLOT DATE = 10/19/2011	DATE -	REVISED -

STATE OF ILLINOIS
DEPARTMENT OF TRANSPORTATION

IL RTE. 4

SCALE: | SHEET OF SHEETS | STA. 1123+00.00 TO STA. 1123+25.00

F.A.P. RTE.	SECTION	COUNTY	TOTAL SHEETS	SHEET NO.
686	114B-1	JACKSON	114	42

CONTRACT NO. 78049

ILLINOIS FED. AID PROJECT

FINAL SURVEY		BY	DATE
	SURVEYED		
	PLOTTED		
	TEMPLATE		
NOTE BOOK	AREAS		
NO.	AREAS CHECKED		

ORIGINAL SURVEY		BY	DATE
	SURVEYED		
	PLOTTED		
	TEMPLATE		
NOTE BOOK	AREAS		
NO.	AREAS CHECKED		

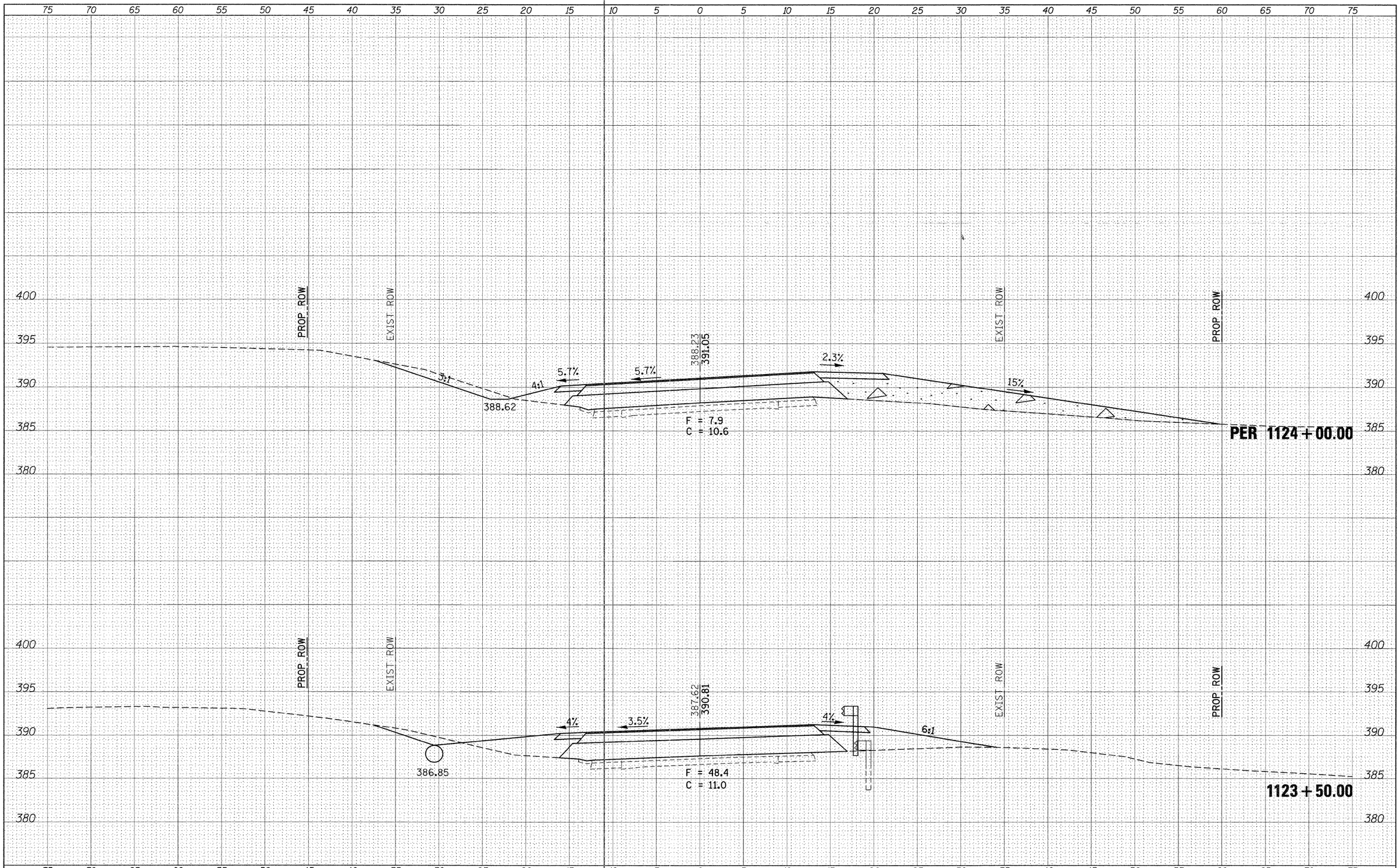

FINAL SURVEY	BY	DATE
SURVEYED		
PLOTTED		
TEMPLATE		
AREAS		
AREAS CHECKED		
NOTE BOOK NO.		

ORIGINAL SURVEY	BY	DATE
SURVEYED		
PLOTTED		
TEMPLATE		
AREAS		
AREAS CHECKED		
NOTE BOOK NO.		

FILE NAME = c:\pw_work\pwidot\halsteadtw\dms49753\78049-xsrsheet81611.dgn	USER NAME = halsteadtw	DESIGNED -	REVISED -
		DRAWN -	REVISED -
	PLOT SCALE = 5.0000 ' / in.	CHECKED -	REVISED -
	PLOT DATE = 10/18/2011	DATE -	REVISED -

STATE OF ILLINOIS
DEPARTMENT OF TRANSPORTATION

IL RTE. 4

SCALE: | SHEET OF SHEETS | STA. 1123+50.00 TO STA. 1124+00.00

F.A. RTE.	SECTION	COUNTY	TOTAL SHEETS	SHEET NO.
686	114B-1	JACKSON	114	43
		CONTRACT NO. 78049		
		ILLINOIS FED. AID PROJECT		

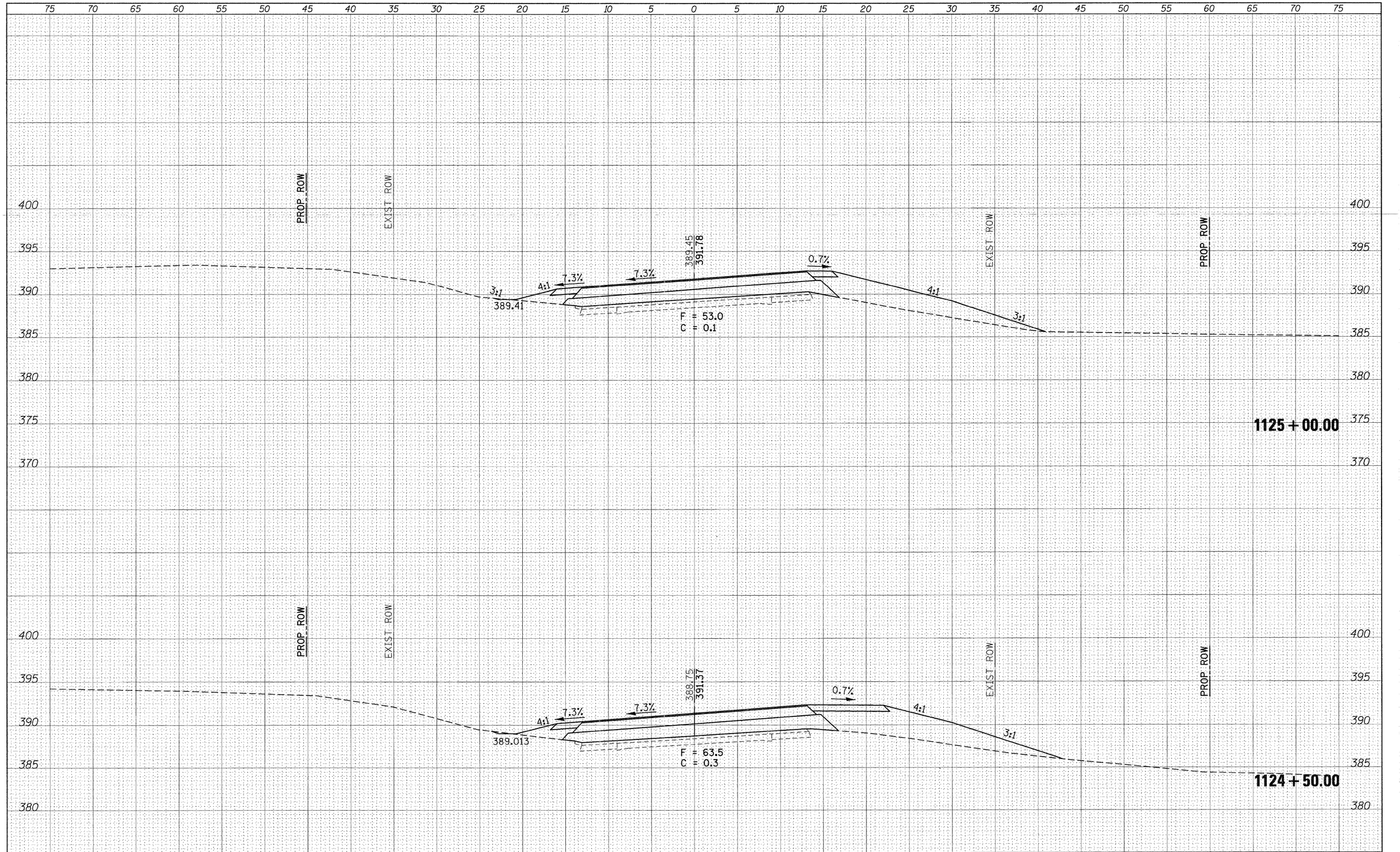

FINAL SURVEY		BY	DATE
SURVEYED			
PLOTTED			
TEMPLATE			
AREAS			
AREAS CHECKED			
NOTE BOOK			
NO.			

ORIGINAL SURVEY		BY	DATE
SURVEYED			
PLOTTED			
TEMPLATE			
AREAS			
AREAS CHECKED			
NOTE BOOK			
NO.			

FILE NAME = c:\pw_work\pwidot\halsteadtw\dms49753\78049-xs\sheet81611.dgn	USER NAME = halsteadtw	DESIGNED -	REVISED -
		DRAWN -	REVISED -
	PLOT SCALE = 5.0000 ' / in.	CHECKED -	REVISED -
	PLOT DATE = 10/18/2011	DATE -	REVISED -

STATE OF ILLINOIS
DEPARTMENT OF TRANSPORTATION

IL RTE. 4

SCALE: | SHEET OF SHEETS | STA. 1124+50.00 TO STA. 1125+00.00

F.A.P. RTE.	SECTION	COUNTY	TOTAL SHEETS	SHEET NO.
686	114B-1	JACKSON	114	44
		CONTRACT NO. 78049		
		ILLINOIS FED. AID PROJECT		

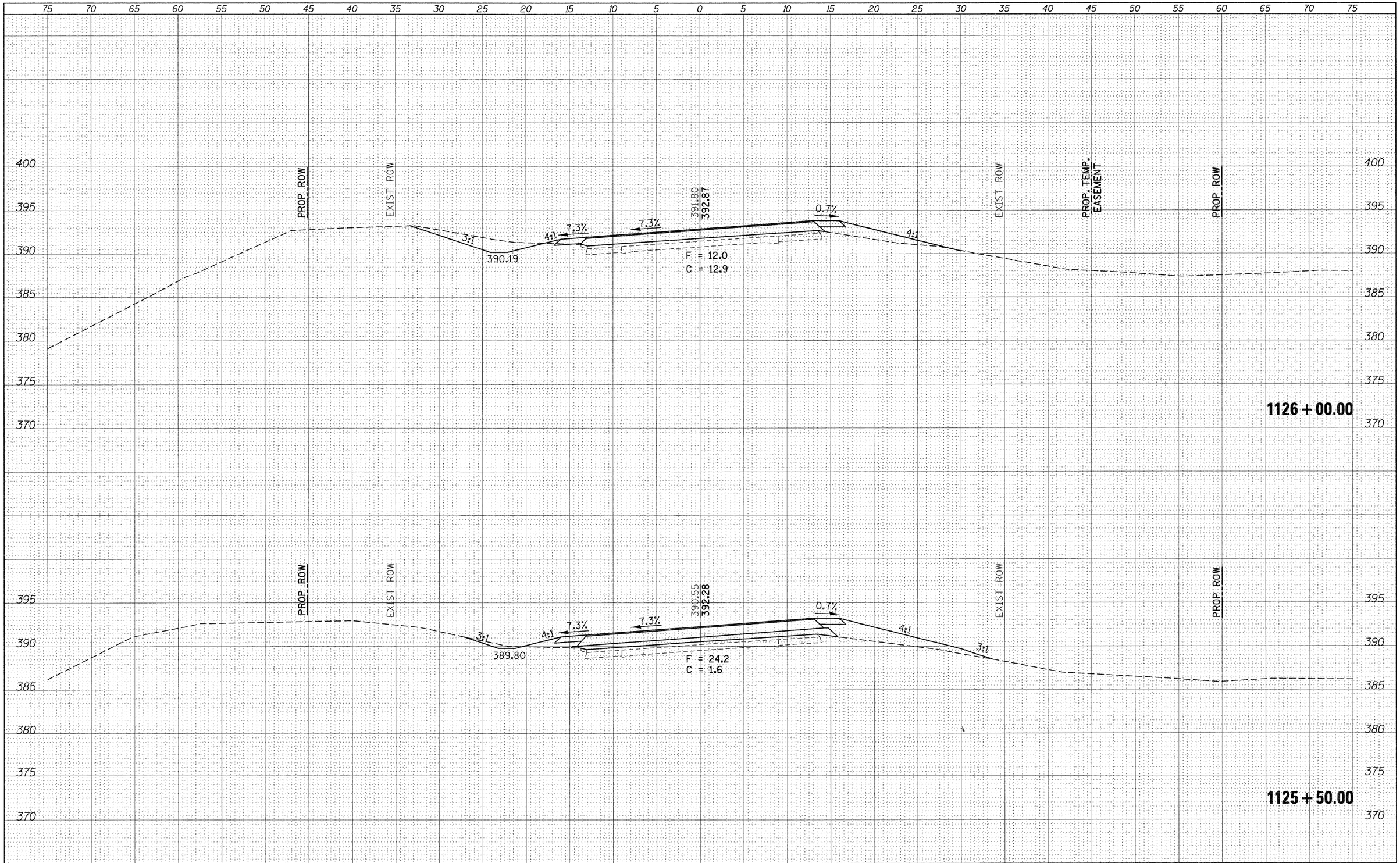

FINAL SURVEY	BY	DATE
SURVEYED		
PLOTTED		
TEMPLATE		
AREAS		
AREAS CHECKED		
NOTE BOOK NO.		

ORIGINAL SURVEY	BY	DATE
SURVEYED		
PLOTTED		
TEMPLATE		
AREAS		
AREAS CHECKED		
NOTE BOOK NO.		

FILE NAME = c:\pw_work\pwidot\halsteadtw\dms49753\78049-xs-sheet81611.dgn	USER NAME = halsteadtw	DESIGNED -	REVISED -
		DRAWN -	REVISED -
	PLOT SCALE = 5.0000 ' / in.	CHECKED -	REVISED -
	PLOT DATE = 10/18/2011	DATE -	REVISED -

STATE OF ILLINOIS
DEPARTMENT OF TRANSPORTATION

IL RTE. 4

SCALE: | SHEET OF SHEETS | STA. 1125+50.00 TO STA. 1126+00.00

F.A.P. RTE.	SECTION	COUNTY	TOTAL SHEETS	SHEET NO.
686	114B-1	JACKSON	114	45

CONTRACT NO. 78049

ILLINOIS FED. AID PROJECT

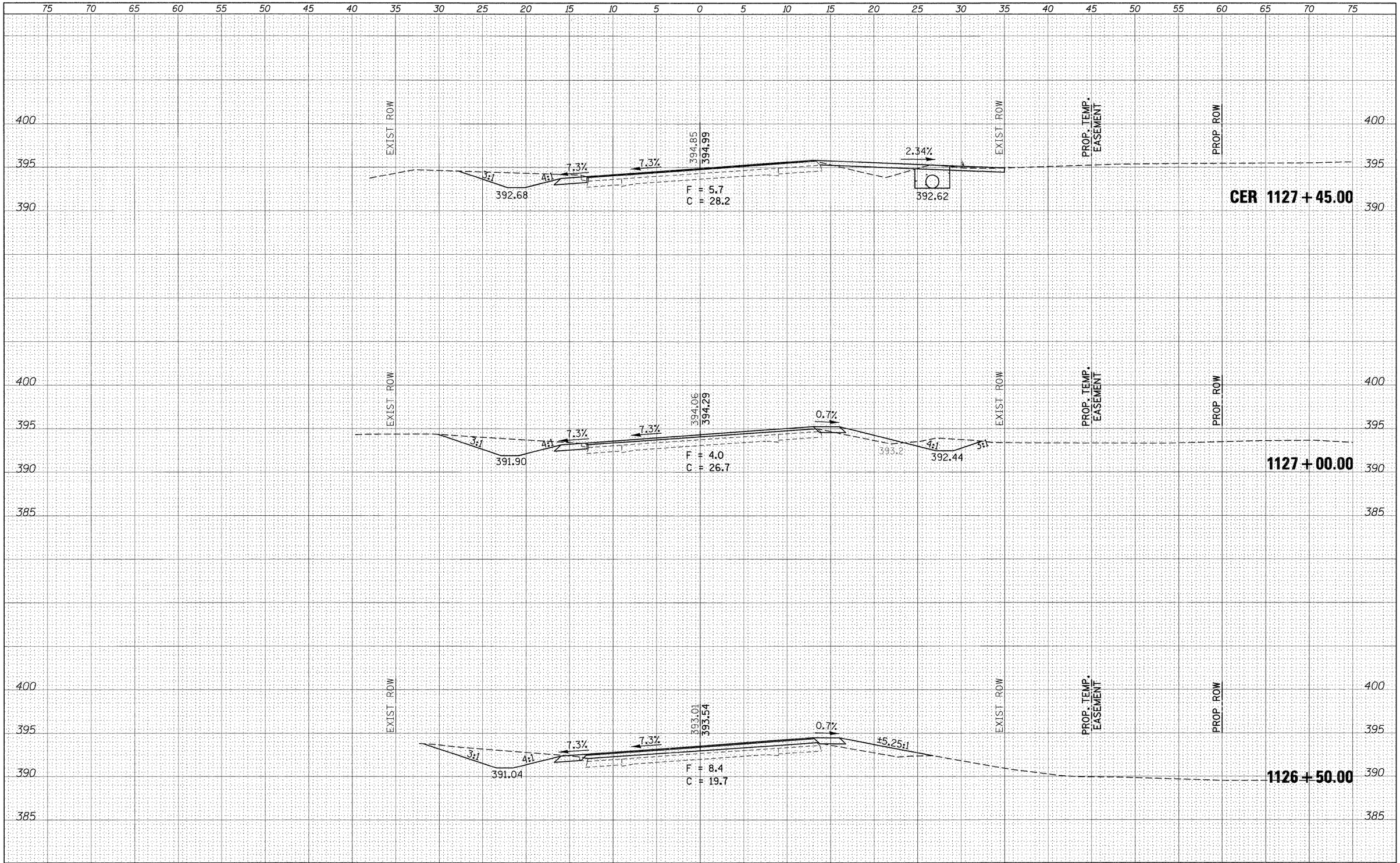

FINAL SURVEY	BY	DATE
SURVEYED		
PLOTTED		
TEMPLATE		
AREAS		
AREAS CHECKED		
NOTE BOOK NO.		

ORIGINAL SURVEY	BY	DATE
SURVEYED		
PLOTTED		
TEMPLATE		
AREAS		
AREAS CHECKED		
NOTE BOOK NO.		

FILE NAME = c:\pw_work\pwidot\halsteadtw\dms49753\78049-xsheet81611.dgn

USER NAME = halsteadtw
PLOT SCALE = 5.0000 ' / in.
PLOT DATE = 10/18/2011

DESIGNED -	REVISED -
DRAWN -	REVISED -
CHECKED -	REVISED -
DATE -	REVISED -

STATE OF ILLINOIS
DEPARTMENT OF TRANSPORTATION

IL RTE. 4

SCALE: SHEET OF SHEETS STA. 1126+50.00 TO STA. 1127+45.00

F.A.P RTE.	SECTION	COUNTY	TOTAL SHEETS	SHEET NO.
686	114B-1	JACKSON	114	46

CONTRACT NO. 78049

ILLINOIS FED. AID PROJECT

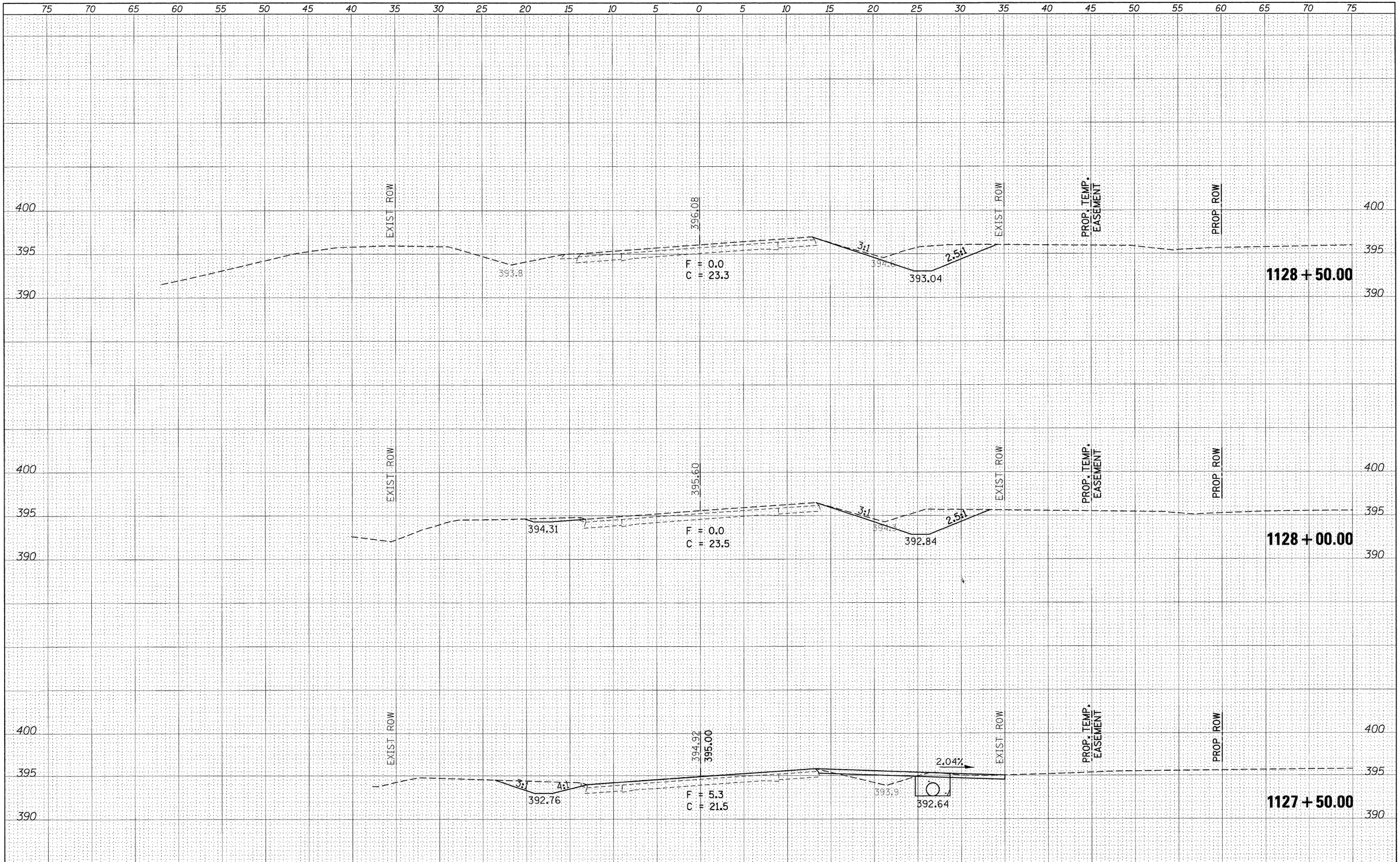

FINAL SURVEY	BY	DATE
SURVEYED		
PLOTTED		
TEMPLATE		
AREAS		
AREAS CHECKED		
NOTE BOOK NO.		

ORIGINAL SURVEY	BY	DATE
SURVEYED		
PLOTTED		
TEMPLATE		
AREAS		
AREAS CHECKED		
NOTE BOOK NO.		

FILE NAME = c:\pw_work\pwidot\halsteadtw\dms49753\78049-xs\sheet81611.dgn	USER NAME = halsteadtw	DESIGNED -	REVISED -
		DRAWN -	REVISED -
	PLOT SCALE = 5.0000 ' / in.	CHECKED -	REVISED -
	PLOT DATE = 10/18/2011	DATE -	REVISED -

STATE OF ILLINOIS
DEPARTMENT OF TRANSPORTATION

IL RTE. 4

SCALE: | SHEET OF SHEETS | STA. 1127+50.00 TO STA. 1128+50.00

F.A.P. RTE.	SECTION	COUNTY	TOTAL SHEETS	SHEET NO.
686	114B-1	JACKSON	114	47
		CONTRACT NO. 78049		
	ILLINOIS	FED. AID PROJECT		

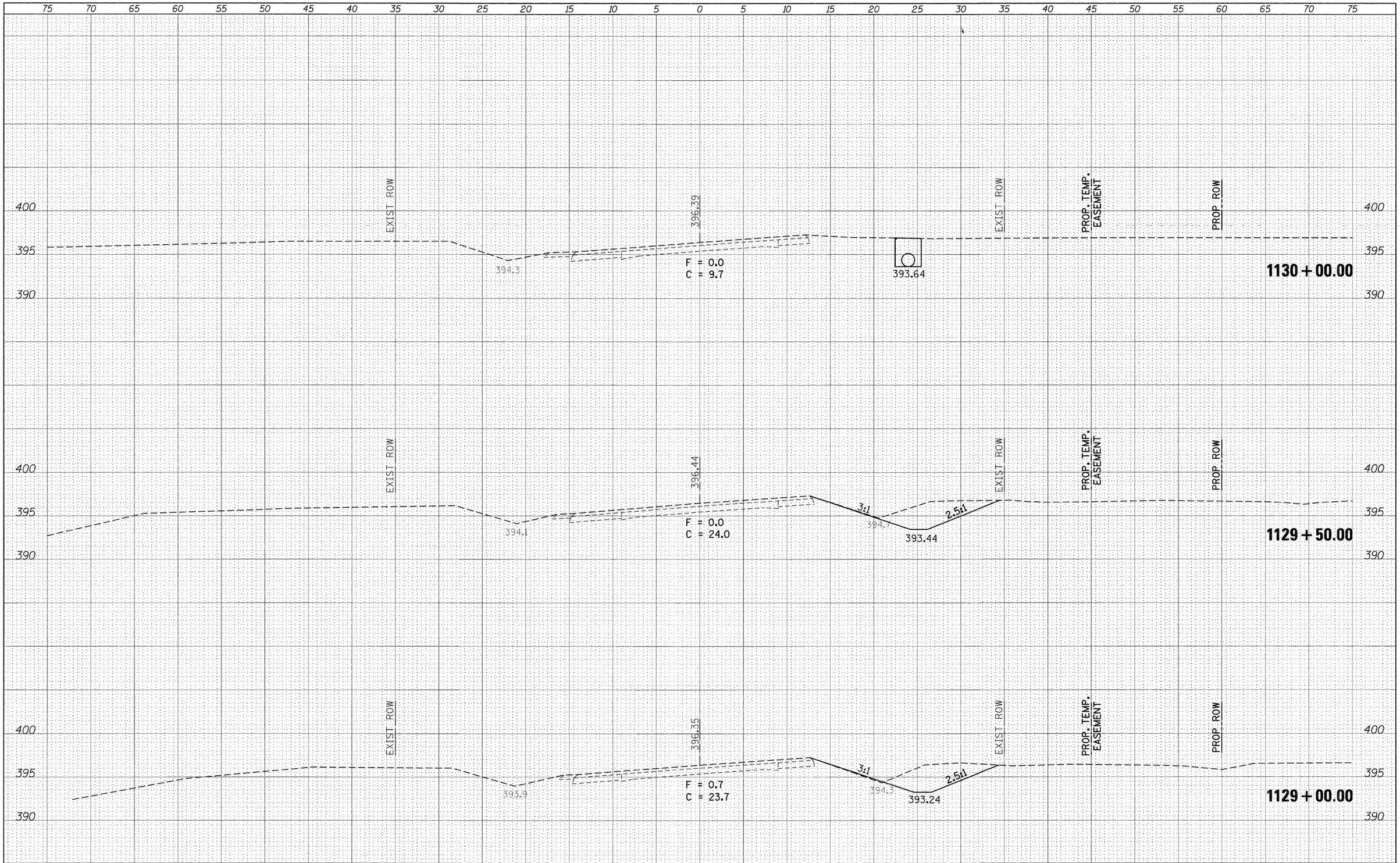

FINAL SURVEY	BY	DATE
SURVEYED		
PLOTTED		
TEMPLATE		
AREAS		
AREAS CHECKED		
NOTE BOOK NO.		

ORIGINAL SURVEY	BY	DATE
SURVEYED		
PLOTTED		
TEMPLATE		
AREAS		
AREAS CHECKED		
NOTE BOOK NO.		

FILE NAME = c:\pw_work\pwidot\halsteadtw\dms49753\78049-xs-sheet81611.dgn	USER NAME = halsteadtw	DESIGNED -	REVISED -
		DRAWN -	REVISED -
	PLOT SCALE = 5.0000 ' / in.	CHECKED -	REVISED -
	PLOT DATE = 10/18/2011	DATE -	REVISED -

STATE OF ILLINOIS
DEPARTMENT OF TRANSPORTATION

IL RTE. 4

SCALE: | SHEET OF SHEETS | STA. 1129+00.00 TO STA. 1130+00.00

F.A.P. RTE.	SECTION	COUNTY	TOTAL SHEETS	SHEET NO.
686	114B-1	JACKSON	114	48

CONTRACT NO. 78049

ILLINOIS FED. AID PROJECT

FINAL SURVEY	BY	DATE
SURVEYED		
PLOTTED		
TEMPLATE		
AREAS		
AREAS CHECKED		
NOTE BOOK NO.		

ORIGINAL SURVEY	BY	DATE
SURVEYED		
PLOTTED		
TEMPLATE		
AREAS		
AREAS CHECKED		
NOTE BOOK NO.		

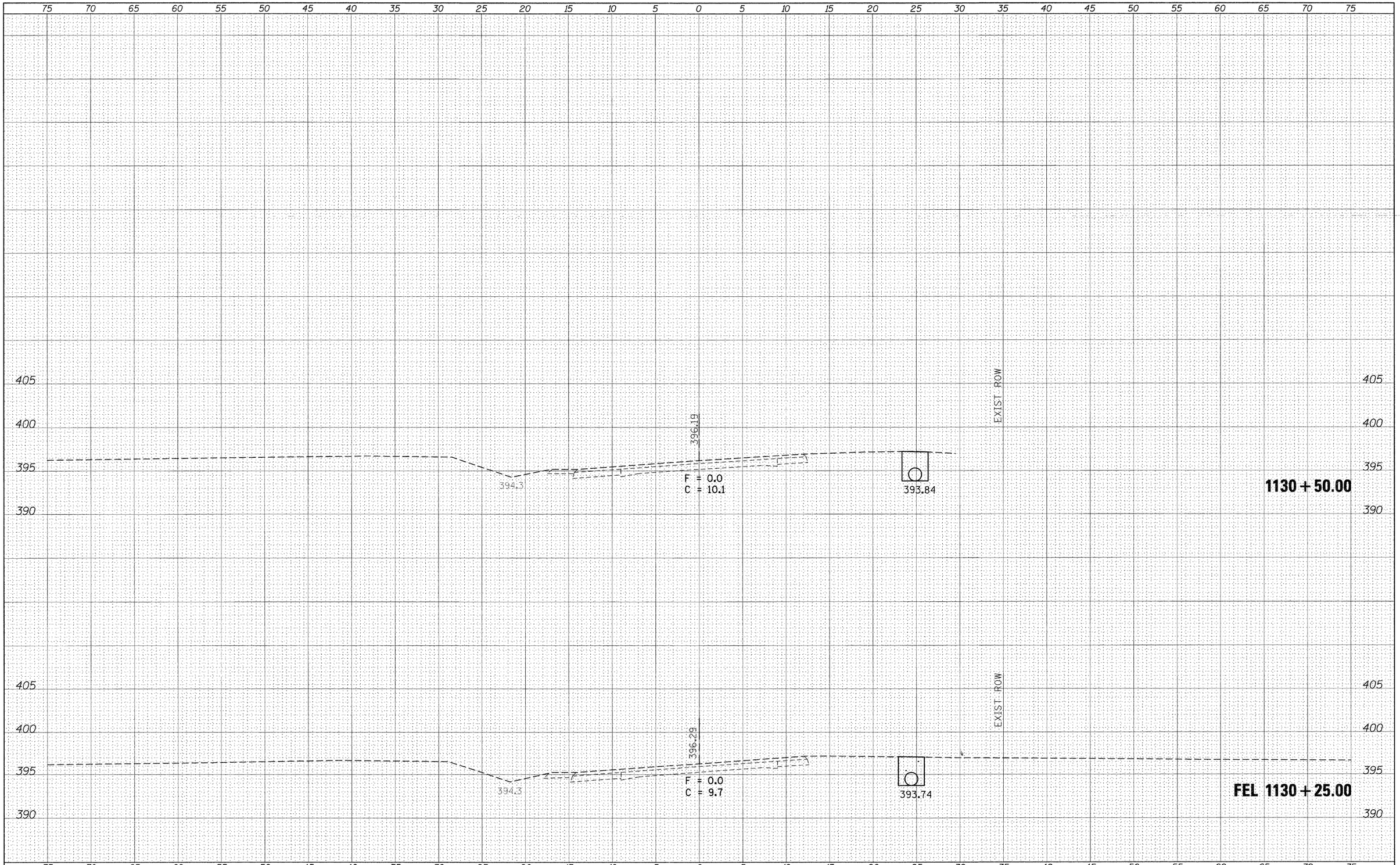

FILE NAME = c:\pw_work\pwidot\halsteadtw\dms49753\78049-xs\sheet81611.dgn	USER NAME = halsteadtw	DESIGNED -	REVISED -
		DRAWN -	REVISED -
	PLOT SCALE = 5.0000 ' / in.	CHECKED -	REVISED -
	PLOT DATE = 10/18/2011	DATE -	REVISED -

STATE OF ILLINOIS
DEPARTMENT OF TRANSPORTATION

IL RTE. 4

SCALE: | SHEET OF SHEETS | STA. 1130+25.00 TO STA. 1130+50.00

F.A.P. RTE.	SECTION	COUNTY	TOTAL SHEETS	SHEET NO.
686	114B-1	JACKSON	114	49

CONTRACT NO. 78049

ILLINOIS FED. AID PROJECT

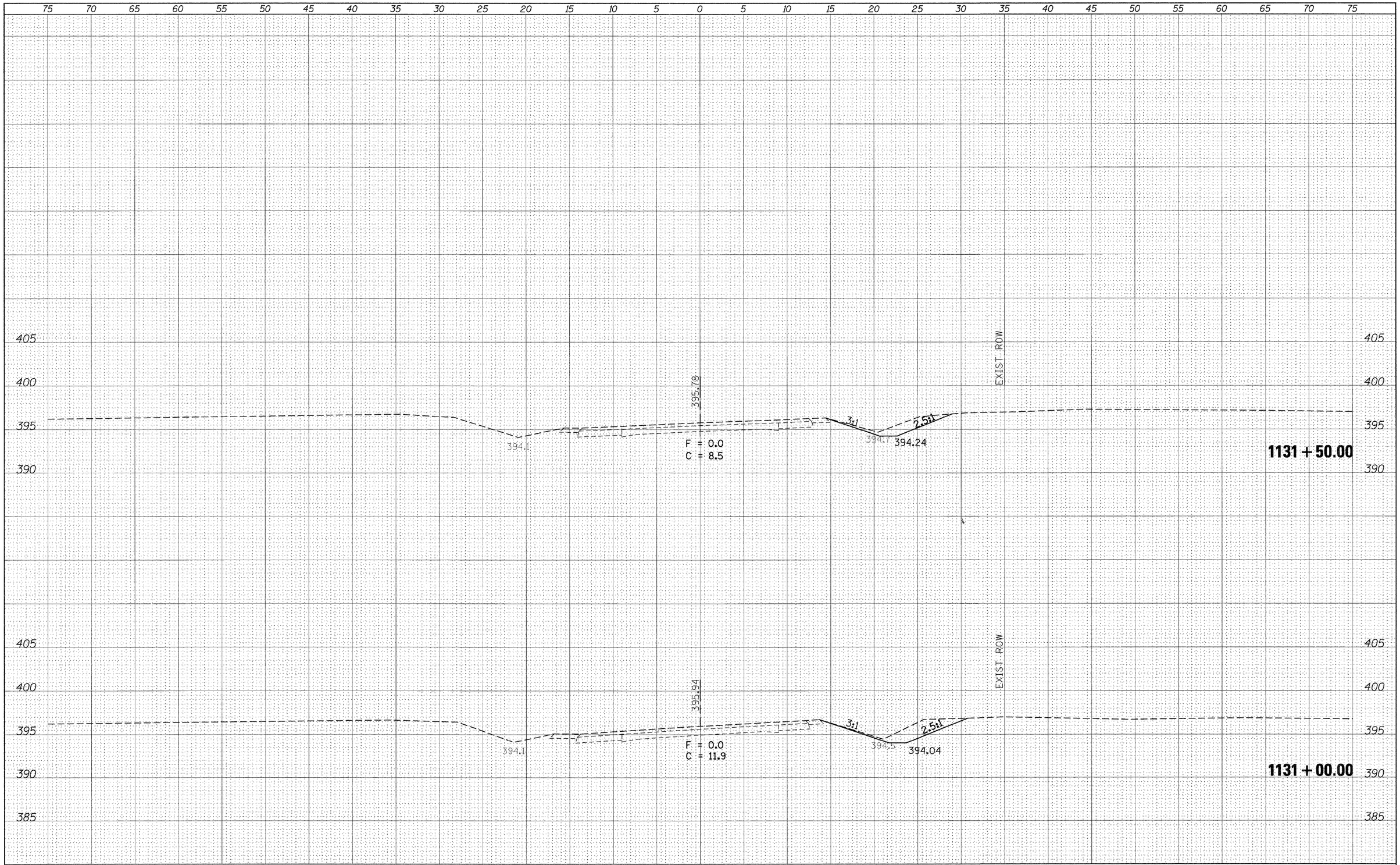

FINAL SURVEY		BY	DATE
NOTE BOOK	SURVEYED		
	PLOTTED		
	TEMPLATE		
	AREAS		
	AREAS CHECKED		
NO.			

ORIGINAL SURVEY		BY	DATE
NOTE BOOK	SURVEYED		
	PLOTTED		
	TEMPLATE		
	AREAS		
	AREAS CHECKED		
NO.			

FILE NAME = c:\pw_work\pwidot\halsteadtw\dms49753\78049-xs sheet81611.dgn	USER NAME = halsteadtw	DESIGNED -	REVISED -
		DRAWN -	REVISED -
	PLOT SCALE = 5.0000 ' / in.	CHECKED -	REVISED -
	PLOT DATE = 10/18/2011	DATE -	REVISED -

STATE OF ILLINOIS
DEPARTMENT OF TRANSPORTATION

IL RTE. 4

SCALE: | SHEET OF SHEETS | STA. 1131+00.00 TO STA. 1131+50.00

F.A.P. RTE.	SECTION	COUNTY	TOTAL SHEETS	SHEET NO.
686	114B-1	JACKSON	114	50

CONTRACT NO. 78049

ILLINOIS FED. AID PROJECT

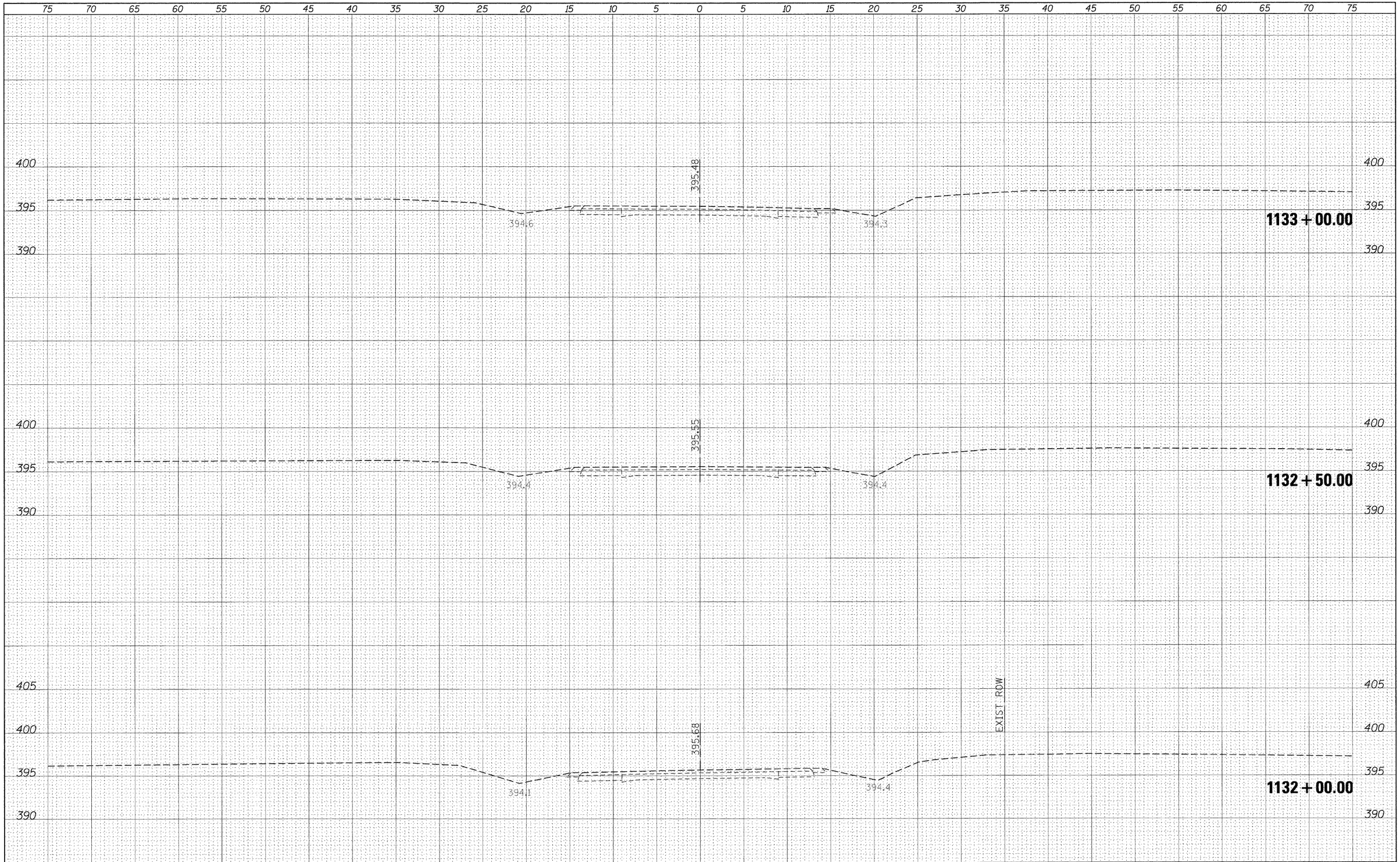

FINAL SURVEY		BY	DATE
SURVEYED			
PLOTTED			
TEMPLATE			
AREAS			
AREAS CHECKED			
NOTE BOOK			
NO.			

ORIGINAL SURVEY		BY	DATE
SURVEYED			
PLOTTED			
TEMPLATE			
AREAS			
AREAS CHECKED			
NOTE BOOK			
NO.			

FILE NAME = c:\pw_work\pwidot\halsteadtw\dms49753\78049-xs-sheet01611.dgn	USER NAME = halsteadtw	DESIGNED -	REVISED -
		DRAWN -	REVISED -
	PLOT SCALE = 5.0000 ' / in.	CHECKED -	REVISED -
	PLOT DATE = 10/10/2011	DATE -	REVISED -

STATE OF ILLINOIS
DEPARTMENT OF TRANSPORTATION

IL RTE. 4

SCALE: SHEET OF SHEETS STA. 1132+00.00 TO STA. 1133+00.00

F.A.P. RTE.	SECTION	COUNTY	TOTAL SHEETS	SHEET NO.
686	114B-1	JACKSON	114	51
		CONTRACT NO. 78049		
		ILLINOIS FED. AID PROJECT		

FINAL SURVEY		BY	DATE
NOTE BOOK	SURVEYED		
	PLOTTED		
	TEMPLATE		
	AREAS		
NO.	AREAS CHECKED		

ORIGINAL SURVEY		BY	DATE
NOTE BOOK	SURVEYED		
	PLOTTED		
	TEMPLATE		
	AREAS		
NO.	AREAS CHECKED		

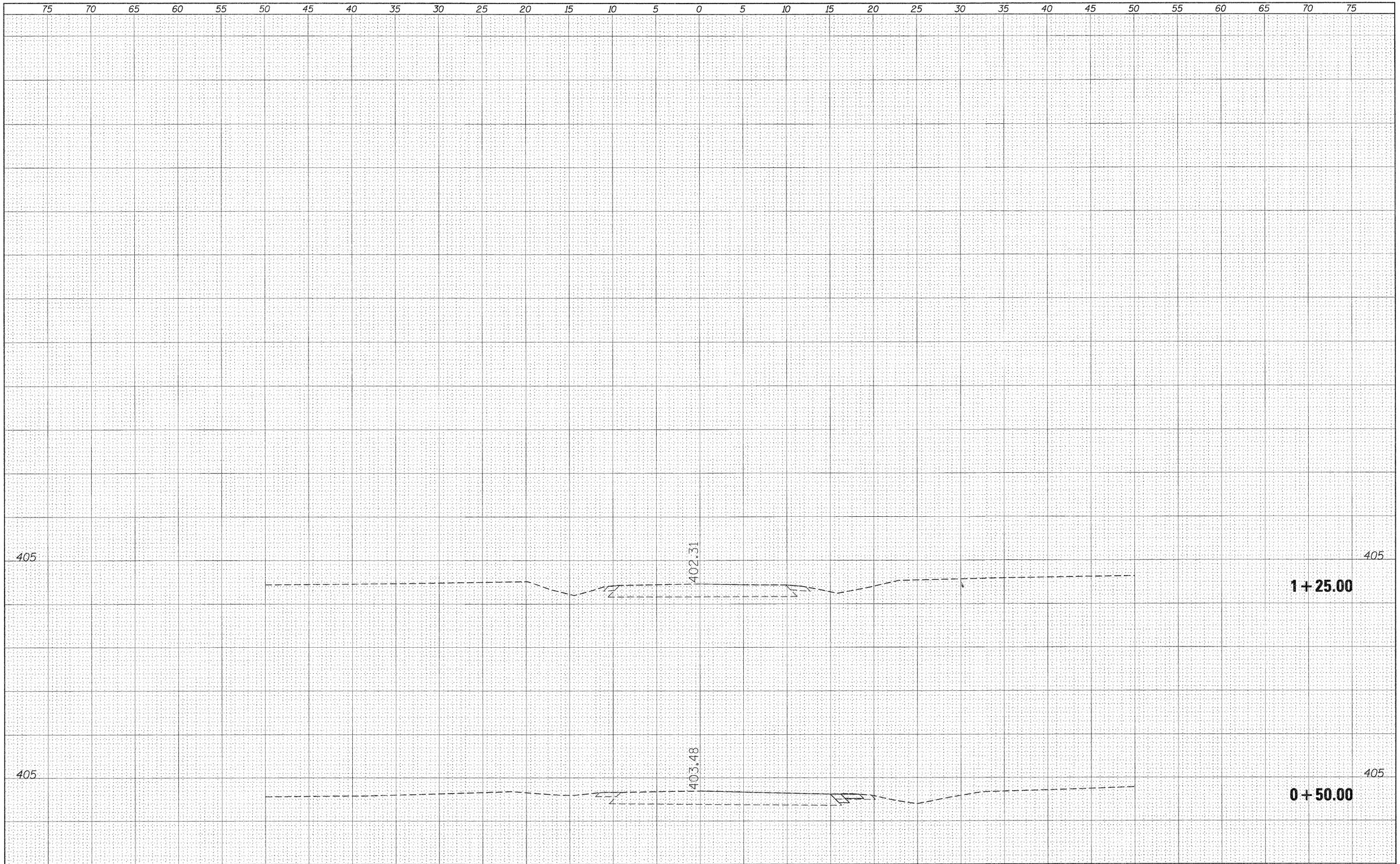

FILE NAME = c:\pw_work\pwidot\porterwc\dms49753\78049-sht-det-intersection.dgn	USER NAME = porterwc	DESIGNED -	REVISED -
		DRAWN -	REVISED -
	PLOT SCALE = 5.0000 ' / in.	CHECKED -	REVISED -
	PLOT DATE = 11/3/2011	DATE -	REVISED -

STATE OF ILLINOIS
DEPARTMENT OF TRANSPORTATION

MUDLINE RD.–BEAUCOUP RD. INTERSECTION
ALONG BEAUCOUP RD.

SCALE: ____ | SHEET ___ OF ___ SHEETS | STA. +50.00 ____ TO STA. 1+25.00

F.A.P. RTE.	SECTION	COUNTY	TOTAL SHEETS	SHEET NO.
686	114B-1	JACKSON	114	52
		CONTRACT NO. 78049		
		ILLINOIS	FED. AID PROJECT	

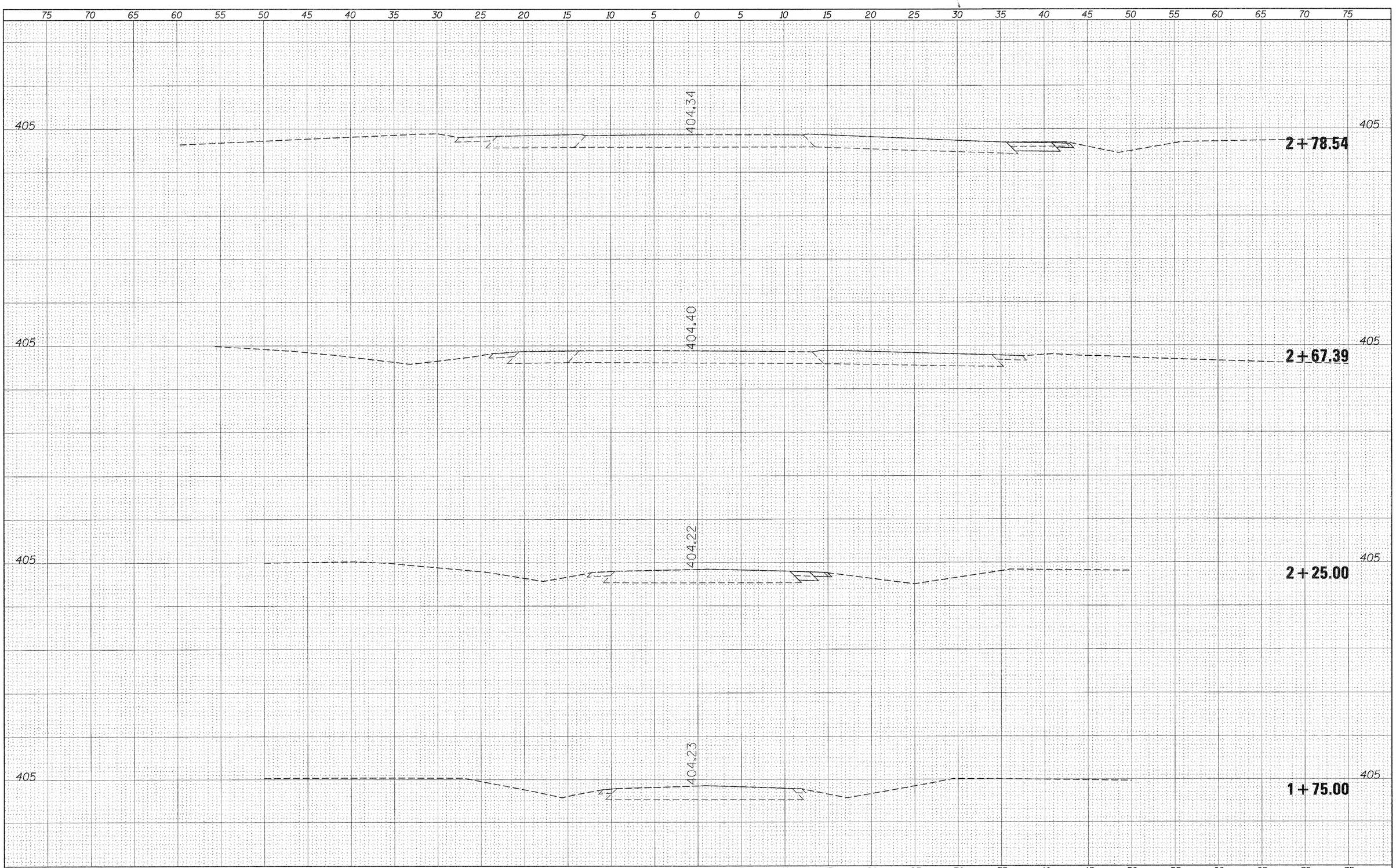

FINAL SURVEY		BY	DATE
NOTE BOOK	SURVEYED		
	PLOTTED		
	TEMPLATE		
	AREAS		
NO.	AREAS CHECKED		

ORIGINAL SURVEY		BY	DATE
NOTE BOOK	SURVEYED		
	PLOTTED		
	TEMPLATE		
	AREAS		
NO.	AREAS CHECKED		

FILE NAME = c:\pw_work\pwidot\porterwc\dms49753\78049-sht-det-intersection.dgn	USER NAME = porterwc	DESIGNED -	REVISED -
		DRAWN -	REVISED -
	PLOT SCALE = 5.0000 ' / in.	CHECKED -	REVISED -
	PLOT DATE = 11/3/2011	DATE -	REVISED -

STATE OF ILLINOIS
DEPARTMENT OF TRANSPORTATION

MUDLINE RD.–BEAUCOUP RD. INTERSECTION
ALONG MUDLINE RD.

SCALE: ____ SHEET ___ OF ___ SHEETS STA. 1+75.00 TO STA. 2+78.54

F.A.P. RTE.	SECTION	COUNTY	TOTAL SHEETS	SHEET NO.
686	114B-1	JACKSON	114	53
		CONTRACT NO. 78049		
		ILLINOIS FED. AID PROJECT		

FINAL SURVEY		BY	DATE
NOTE BOOK NO.	SURVEYED		
	PLOTTED		
	TEMPLATE		
	AREAS		
	AREAS CHECKED		

ORIGINAL SURVEY		BY	DATE
NOTE BOOK NO.	SURVEYED		
	PLOTTED		
	TEMPLATE		
	AREAS		
	AREAS CHECKED		

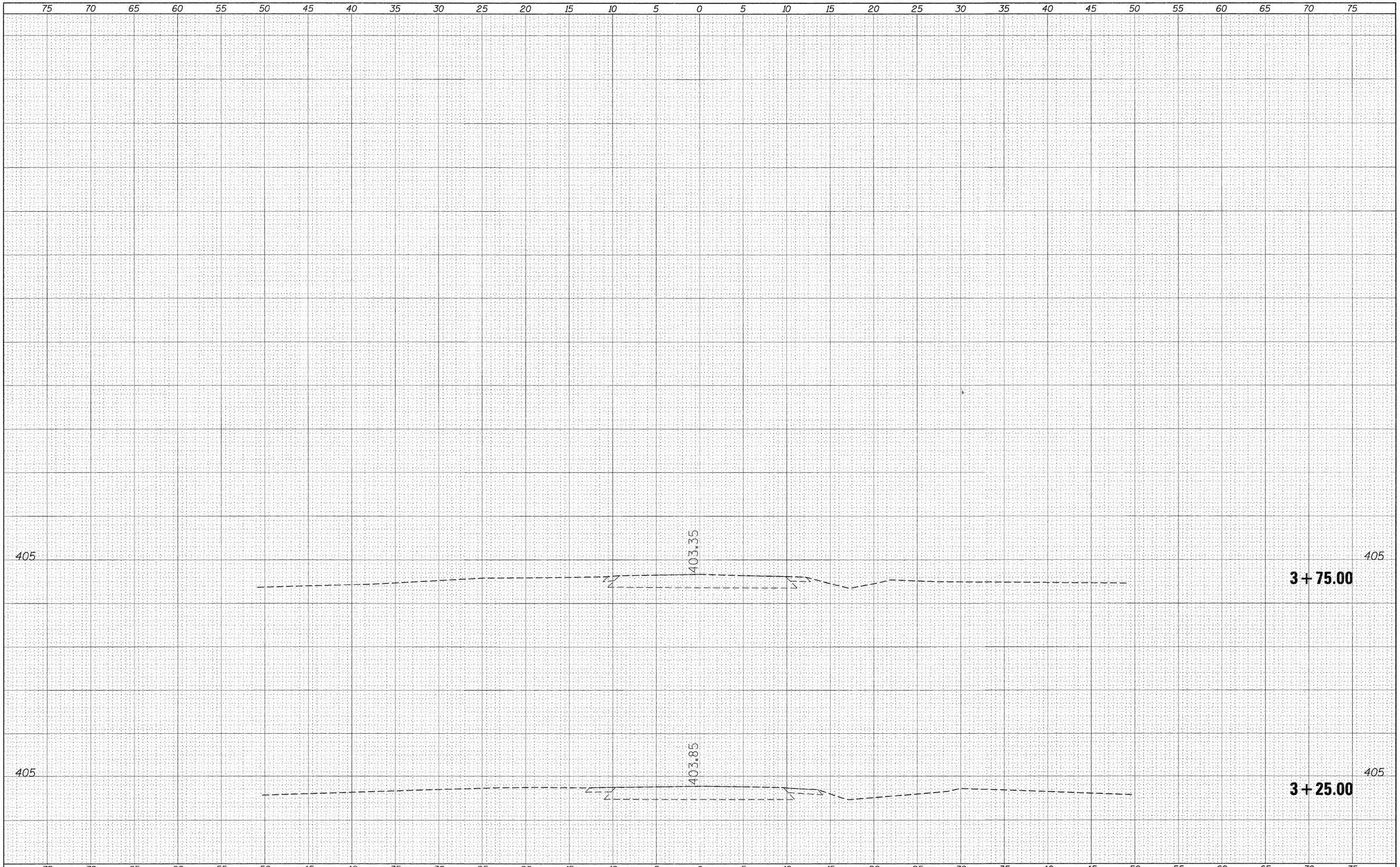

FILE NAME = c:\pw_work\pwidot\porterwc\dms49753\78049-sht-det-intersection.dgn	USER NAME = porterwc	DESIGNED -	REVISED -
		DRAWN -	REVISED -
	PLOT SCALE = 5.0000 ' / in.	CHECKED -	REVISED -
	PLOT DATE = 11/3/2011	DATE -	REVISED -

STATE OF ILLINOIS
DEPARTMENT OF TRANSPORTATION

MUDLINE RD.–BEAUCOUP RD. INTERSECTION
ALONG MUDLINE RD.

SCALE: ____ SHEET ___ OF ___ SHEETS STA. 3+25.00 TO STA. 3+75.00

F.A.P. RTE.	SECTION	COUNTY	TOTAL SHEETS	SHEET NO.
686	114B-1	JACKSON	114	54
		CONTRACT NO. 78049		
		ILLINOIS FED. AID PROJECT		

FINAL SURVEY		BY	DATE
	SURVEYED		
	PLOTTED		
NOTE BOOK	TEMPLATE		
	AREAS		
NO.	AREAS CHECKED		

ORIGINAL SURVEY		BY	DATE
	SURVEYED		
	PLOTTED		
NOTE BOOK	TEMPLATE		
	AREAS		
NO.	AREAS CHECKED		

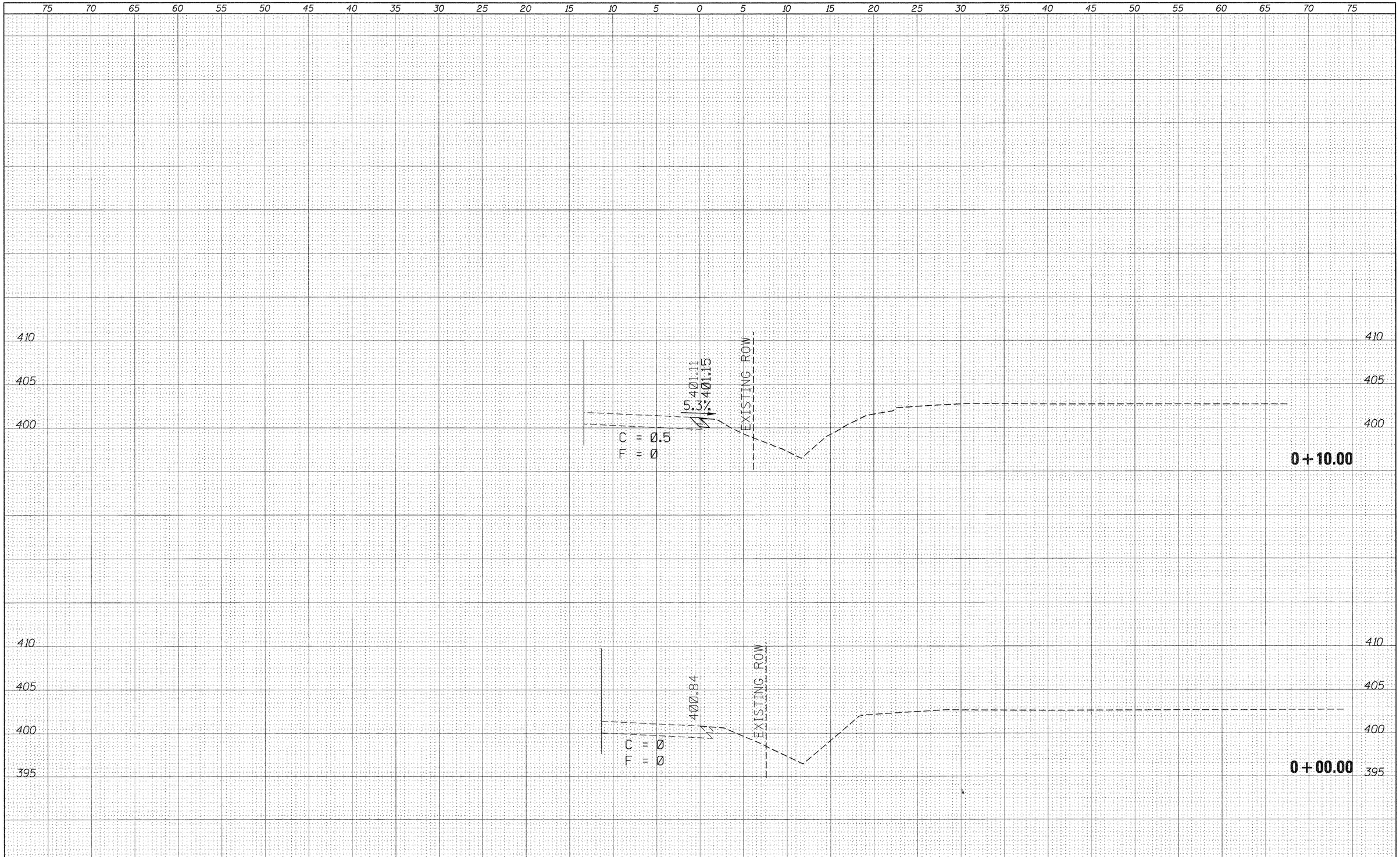

FILE NAME =	USER NAME = porterwc	DESIGNED -	REVISED -
c:\pw_work\pwidot\porterwc\dms49753\detourswaudbeau-xssht.dgn		DRAWN -	REVISED -
	PLOT SCALE = 5.0000 ' / in.	CHECKED -	REVISED -
	PLOT DATE = 11/3/2011	DATE -	REVISED -

STATE OF ILLINOIS
DEPARTMENT OF TRANSPORTATION

IL 13/127–BEAUCOUP RD. INTERSECTION
SOUTHWEST QUADRANT

SCALE: ____ SHEET ___ OF ___ SHEETS STA. +00.00 TO STA. +10.00

F.A.P. RTE.	SECTION	COUNTY	TOTAL SHEETS	SHEET NO.
686	114B-1	JACKSON	114	55
		CONTRACT NO. 78049		
		ILLINOIS FED. AID PROJECT		

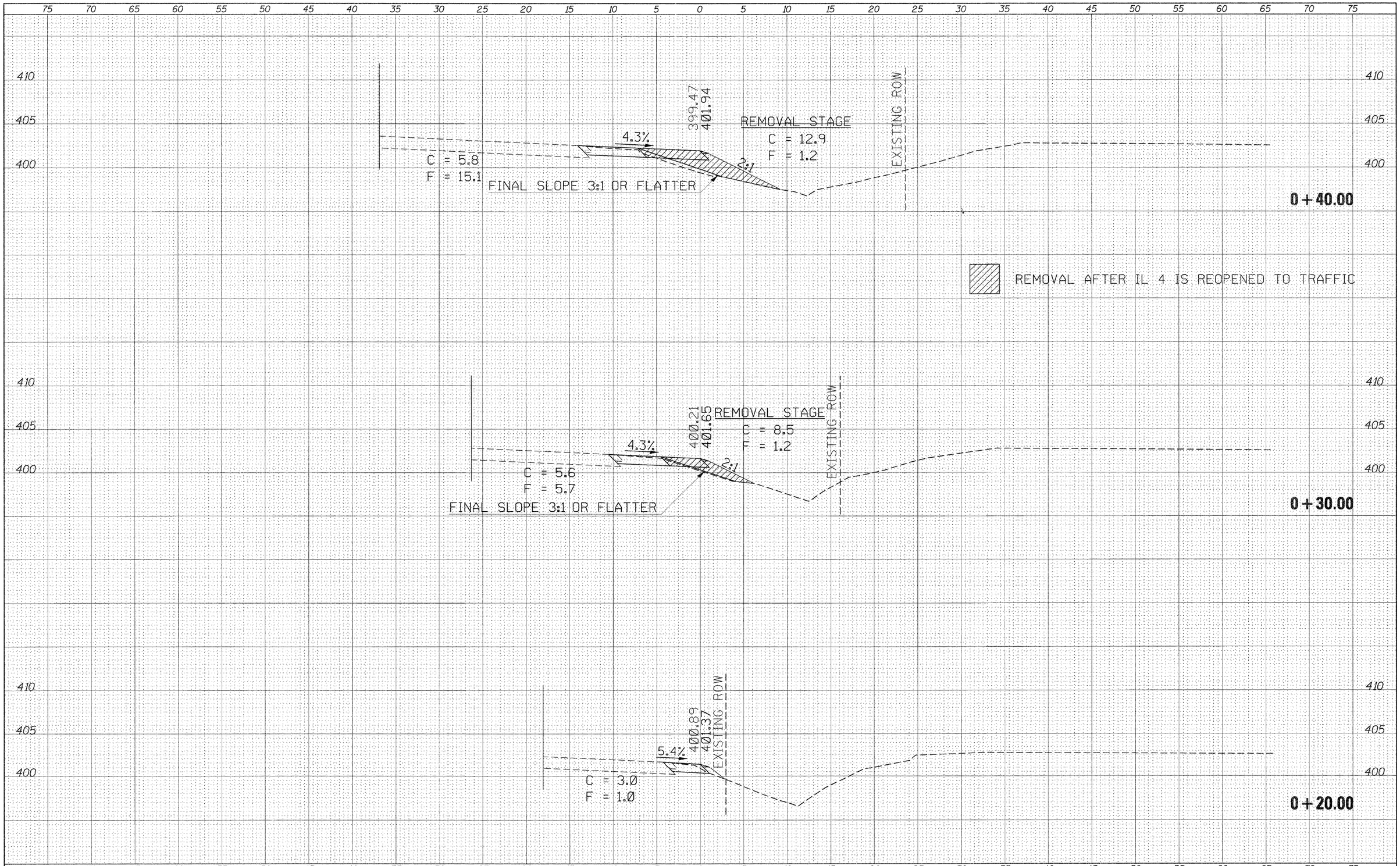

FINAL SURVEY		BY	DATE
NOTE BOOK	SURVEYED		
NO.	PLOTTED		
	TEMPLATE		
	AREAS		
	AREAS CHECKED		

ORIGINAL SURVEY		BY	DATE
NOTE BOOK	SURVEYED		
NO.	PLOTTED		
	TEMPLATE		
	AREAS		
	AREAS CHECKED		

FILE NAME = c:\pw_work\pwidot\porterwc\dms49753\detourswquadbeaur-xssht.dgn	USER NAME = porterwc	DESIGNED -	REVISED -
		DRAWN -	REVISED -
	PLOT SCALE = 5.0000 ' / in.	CHECKED -	REVISED -
	PLOT DATE = 11/3/2011	DATE -	REVISED -

STATE OF ILLINOIS
DEPARTMENT OF TRANSPORTATION

IL 13/127–BEAUCOUP RD. INTERSECTION
SOUTHWEST QUADRANT

SCALE: ____ SHEET ___ OF ___ SHEETS STA. +20.00 TO STA. +40.00

F.A.P. RTE.	SECTION	COUNTY	TOTAL SHEETS	SHEET NO.
686	114B-1	JACKSON	114	56

CONTRACT NO. 78049

ILLINOIS FED. AID PROJECT

FINAL SURVEY	BY	DATE
SURVEYED		
PLOTTED		
NOTE BOOK TEMPLATE		
AREAS		
NO. AREAS CHECKED		

ORIGINAL SURVEY	BY	DATE
SURVEYED		
PLOTTED		
NOTE BOOK TEMPLATE		
AREAS		
NO. AREAS CHECKED		

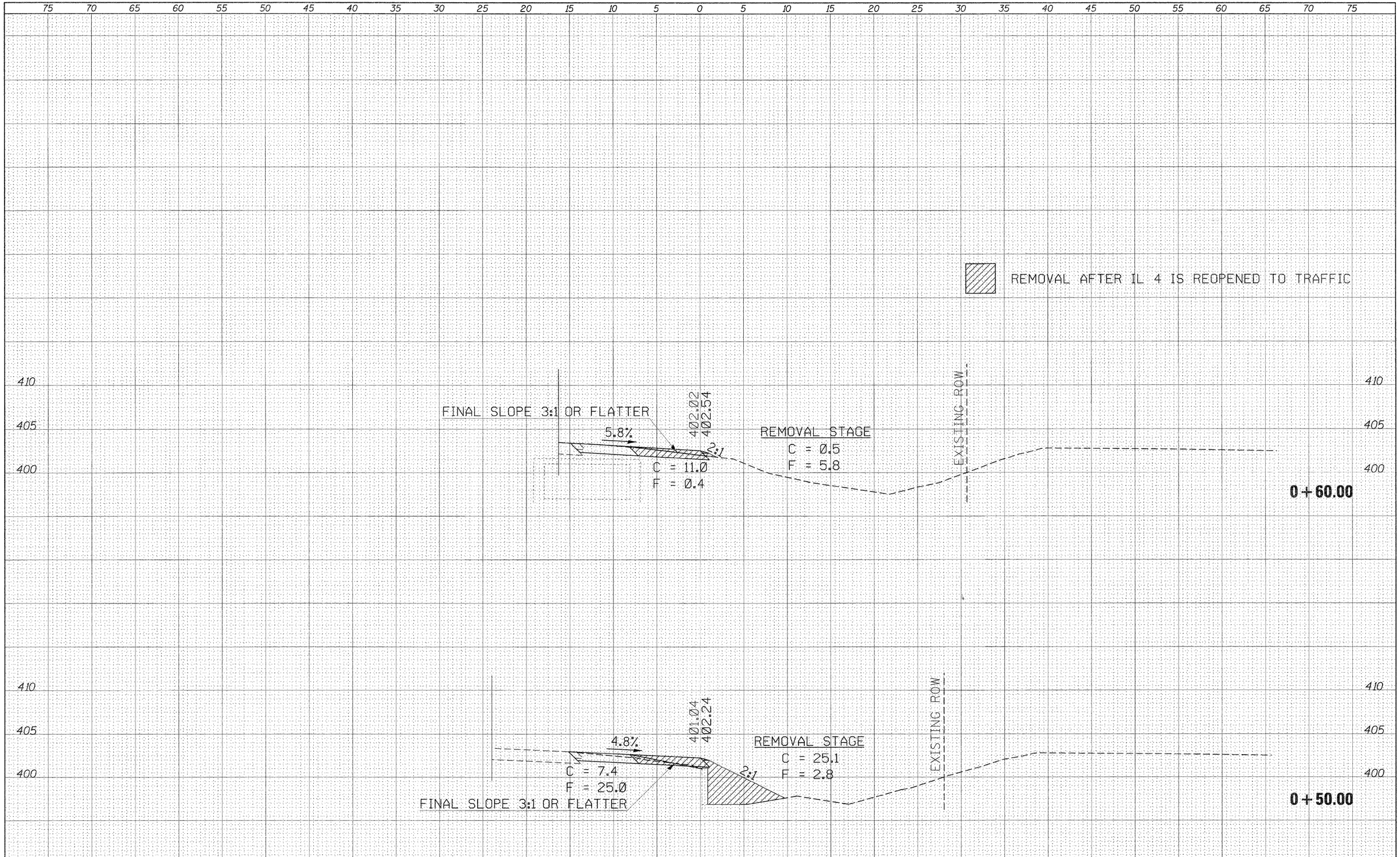

FILE NAME =	USER NAME = porterwc	DESIGNED -	REVISED -
c:\pw_work\pwidot\porterwc\dms49753\detourswqubdbeau-xssht.dgn		DRAWN -	REVISED -
	PLOT SCALE = 5.0000 ' / in.	CHECKED -	REVISED -
	PLOT DATE = 11/3/2011	DATE -	REVISED -

STATE OF ILLINOIS
DEPARTMENT OF TRANSPORTATION

IL 13/127–BEAUCOUP RD. INTERSECTION
SOUTHWEST QUADRANT

SCALE: ____ SHEET ___ OF ___ SHEETS STA. +50.00 ____ TO STA. +60.00

F.A.P. RTE.	SECTION	COUNTY	TOTAL SHEETS	SHEET NO.
686	114B-1	JACKSON	114	57

CONTRACT NO. 78049

ILLINOIS FED. AID PROJECT

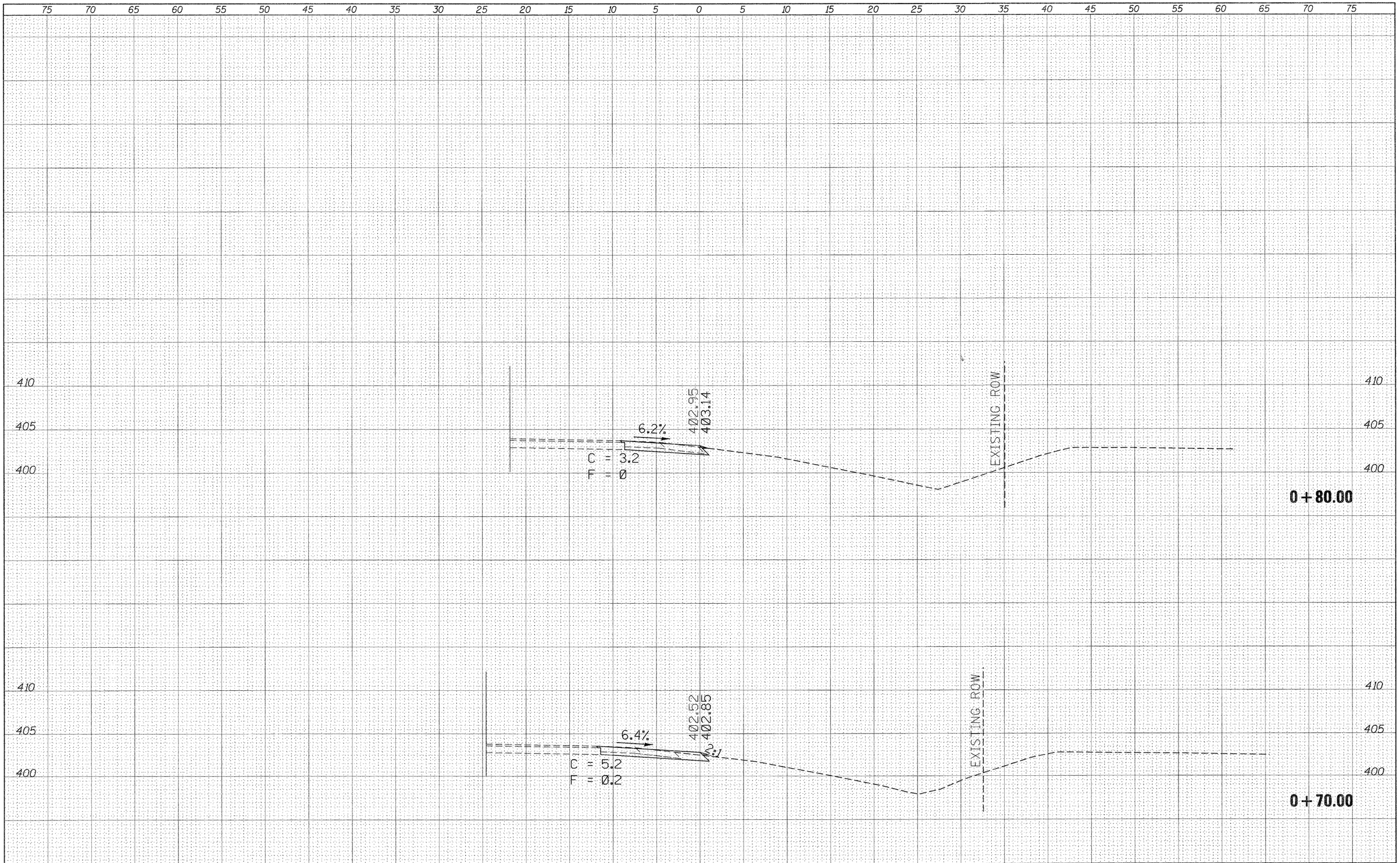

FINAL SURVEY	BY	DATE
SURVEYED		
PLOTTED		
TEMPLATE		
AREAS		
AREAS CHECKED		
NOTE BOOK NO.		

ORIGINAL SURVEY	BY	DATE
SURVEYED		
PLOTTED		
TEMPLATE		
AREAS		
AREAS CHECKED		
NOTE BOOK NO.		

FILE NAME = c:\pw_work\pwidot\porterwc\dms49753\detourswqudbeau-xssht.dgn	USER NAME = porterwc	DESIGNED -	REVISED -
		DRAWN -	REVISED -
	PLOT SCALE = 5.0000 ' / in.	CHECKED -	REVISED -
	PLOT DATE = 11/3/2011	DATE -	REVISED -

STATE OF ILLINOIS
DEPARTMENT OF TRANSPORTATION

IL 13/127–BEAUCOUP RD. INTERSECTION
SOUTHWEST QUADRANT

SCALE: ____ SHEET ___ OF ___ SHEETS STA. +70.00 TO STA. +80.00

F.A.P. RTE.	SECTION	COUNTY	TOTAL SHEETS	SHEET NO.
686	114B-1	JACKSON	114	58
		CONTRACT NO. 78049		
		ILLINOIS FED. AID PROJECT		

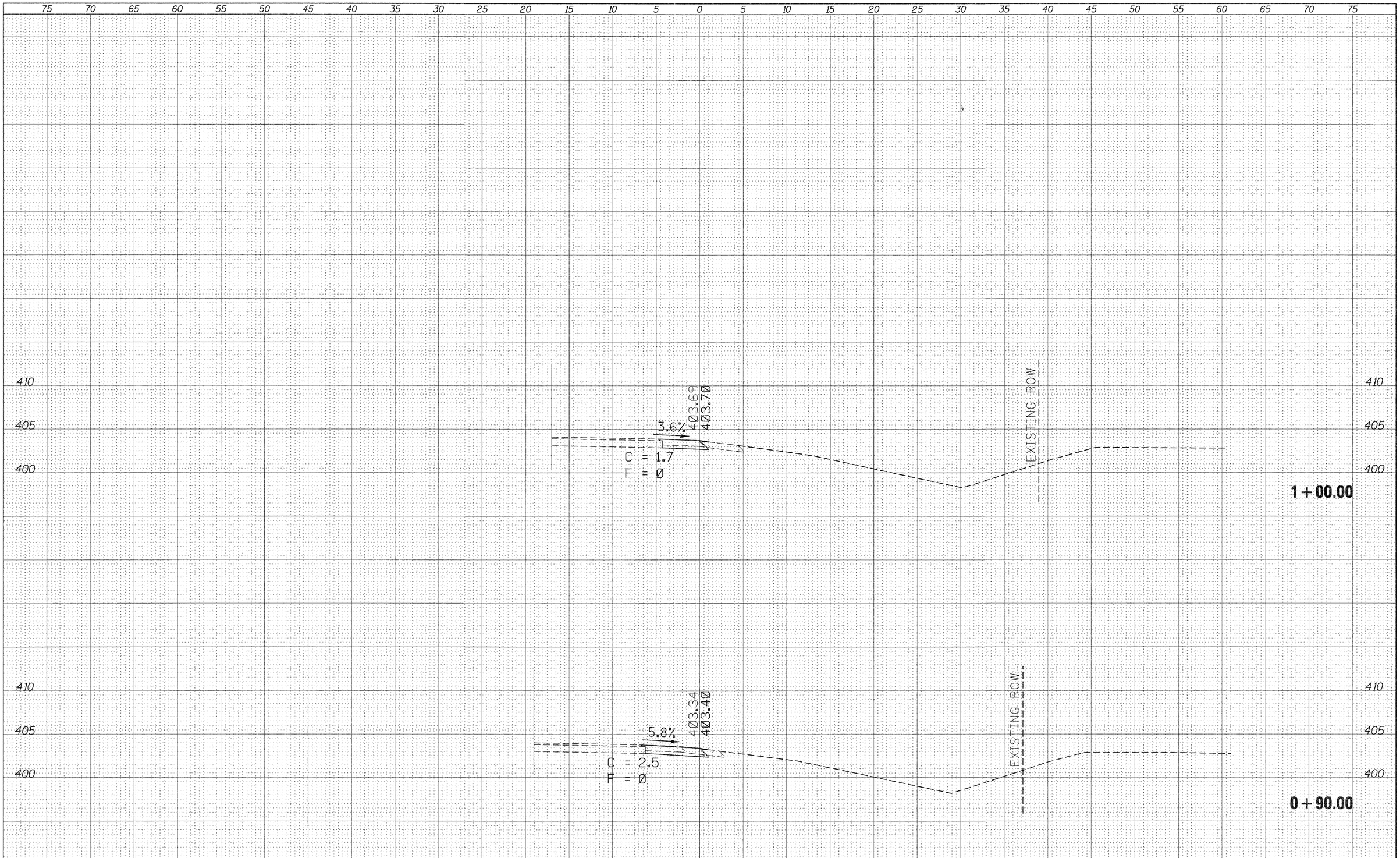

FINAL SURVEY	BY	DATE
SURVEYED		
PLOTTED		
TEMPLATE		
AREAS		
AREAS CHECKED		
NOTE BOOK NO.		

ORIGINAL SURVEY	BY	DATE
SURVEYED		
PLOTTED		
TEMPLATE		
AREAS		
AREAS CHECKED		
NOTE BOOK NO.		

FILE NAME = c:\pw_work\pwidot\porterwc\dms49753\detourswquadbeau-xssht.dgn	USER NAME = porterwc	DESIGNED -	REVISED -
		DRAWN -	REVISED -
	PLOT SCALE = 5.0000 ' / in.	CHECKED -	REVISED -
	PLOT DATE = 11/3/2011	DATE -	REVISED -

STATE OF ILLINOIS
DEPARTMENT OF TRANSPORTATION

IL 13/127–BEAUCOUP RD. INTERSECTION
SOUTHWEST QUADRANT

SCALE: ____ SHEET ___ OF ___ SHEETS STA. +90.00 TO STA. 1+00.00

F.A.P. RTE.	SECTION	COUNTY	TOTAL SHEETS	SHEET NO.
686	114B-1	JACKSON	114	59
		CONTRACT NO. 78049		
		ILLINOIS	FED. AID PROJECT	

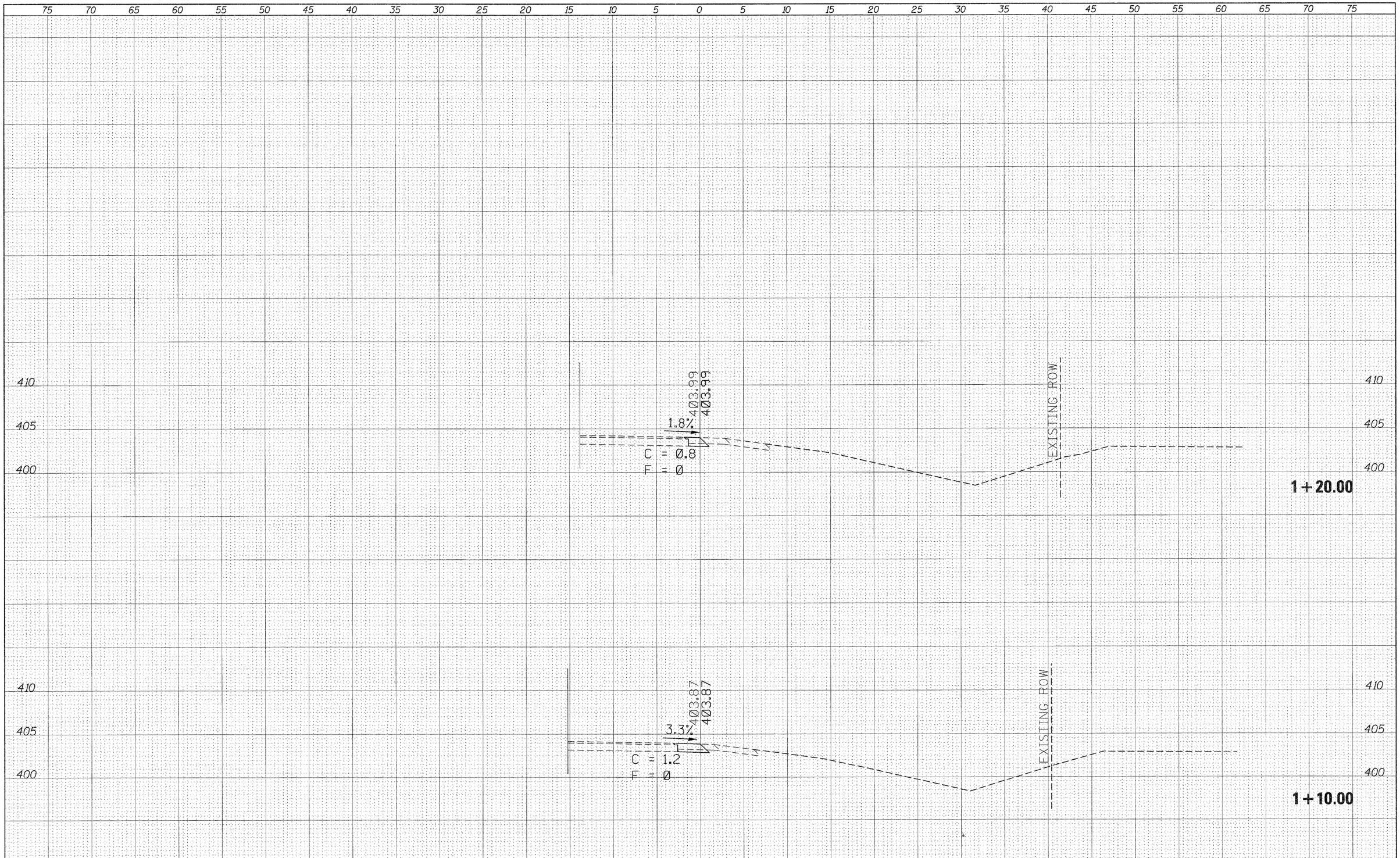

FINAL SURVEY	BY	DATE
SURVEYED		
PLOTTED		
TEMPLATE		
AREAS		
AREAS CHECKED		
NOTE BOOK		
NO.		

ORIGINAL SURVEY	BY	DATE
SURVEYED		
PLOTTED		
TEMPLATE		
AREAS		
AREAS CHECKED		
NOTE BOOK		
NO.		

FILE NAME = c:\pw_work\pwidot\porterwc\dms19753\detourswqupdbeau-xssht.dgn	USER NAME = porterwc	DESIGNED -	REVISED -
		DRAWN -	REVISED -
	PLOT SCALE = 5.0000 ' / in.	CHECKED -	REVISED -
	PLOT DATE = 11/3/2011	DATE -	REVISED -

STATE OF ILLINOIS
DEPARTMENT OF TRANSPORTATION

IL 13127-BEAUCOUP RD. INTERSECTION
SOUTHWEST QUADRANT

SCALE: ____ SHEET ___ OF ___ SHEETS STA. 1+10.00 TO STA. 1+20.00

F.A.P. RTE.	SECTION	COUNTY	TOTAL SHEETS	SHEET NO.
686	114B-1	JACKSON	114	60
		CONTRACT NO. 78049		
		ILLINOIS FED. AID PROJECT		

FINAL SURVEY		BY	DATE
	SURVEYED		
	PLOTTED		
NOTE BOOK	TEMPLATE		
	AREAS		
NO.	AREAS CHECKED		

ORIGINAL SURVEY		BY	DATE
	SURVEYED		
	PLOTTED		
NOTE BOOK	TEMPLATE		
	AREAS		
NO.	AREAS CHECKED		

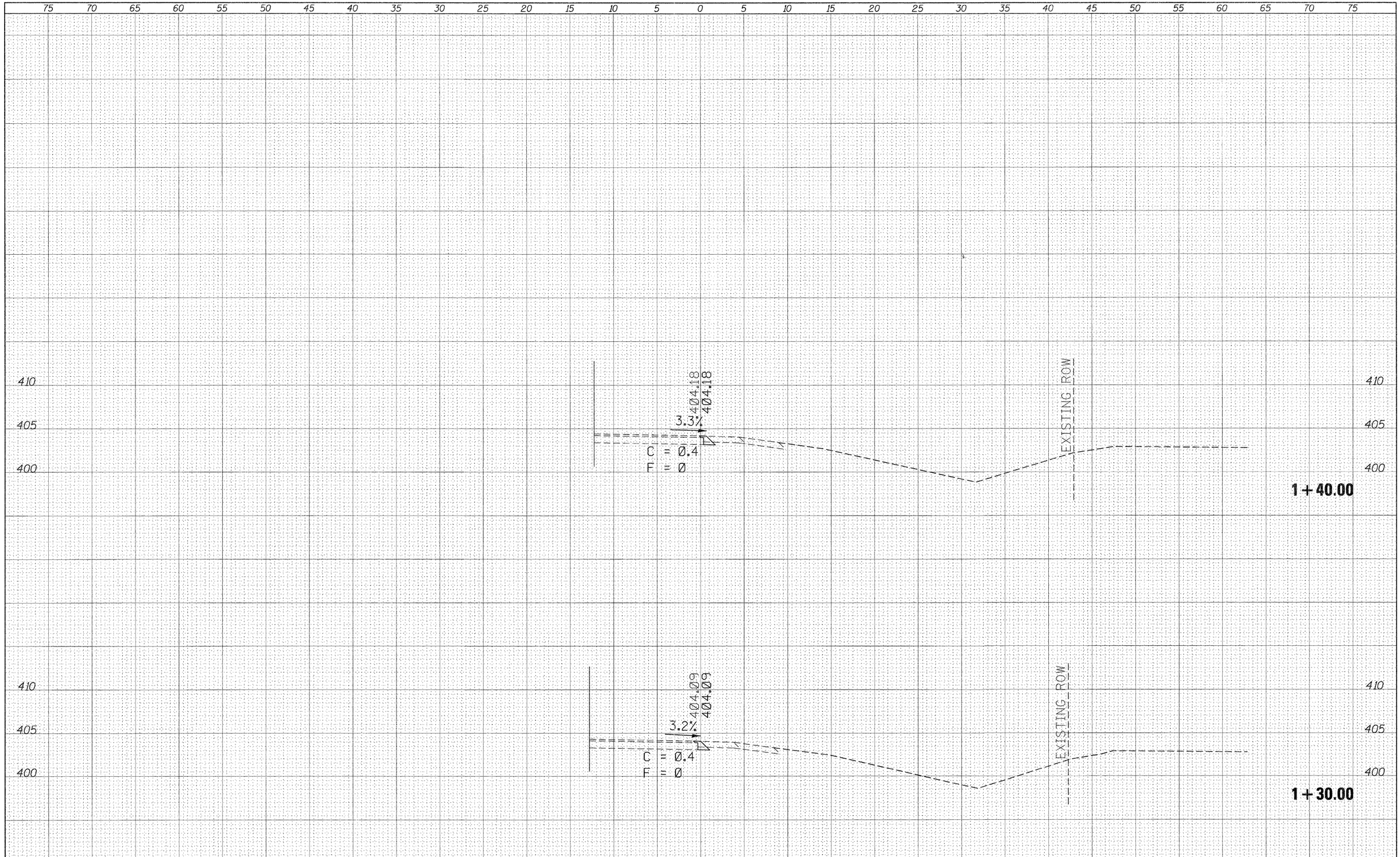

FILE NAME = c:\pw_work\pwidot\porterwc\dms49753\detoursxquadbeau-xsht.dgn	USER NAME = porterwc	DESIGNED -	REVISED -
		DRAWN -	REVISED -
	PLOT SCALE = 5.0000 ' / in.	CHECKED -	REVISED -
	PLOT DATE = 11/3/2011	DATE -	REVISED -

STATE OF ILLINOIS
DEPARTMENT OF TRANSPORTATION

IL 13/127-BEAUCOUP RD. INTERSECTION
SOUTHWEST QUADRANT

SCALE: ____ SHEET ___ OF ___ SHEETS STA. 1+30.00 TO STA. 1+40.00

F.A.P. RTE.	SECTION	COUNTY	TOTAL SHEETS	SHEET NO.
686	114B-1	JACKSON	114	61
		CONTRACT NO. 78049		
		ILLINOIS FED. AID PROJECT		

FINAL SURVEY		BY	DATE
NOTE BOOK NO.	SURVEYED		
	PLOTTED		
	TEMPLATE		
	AREAS		
	AREAS CHECKED		

ORIGINAL SURVEY		BY	DATE
NOTE BOOK NO.	SURVEYED		
	PLOTTED		
	TEMPLATE		
	AREAS		
	AREAS CHECKED		

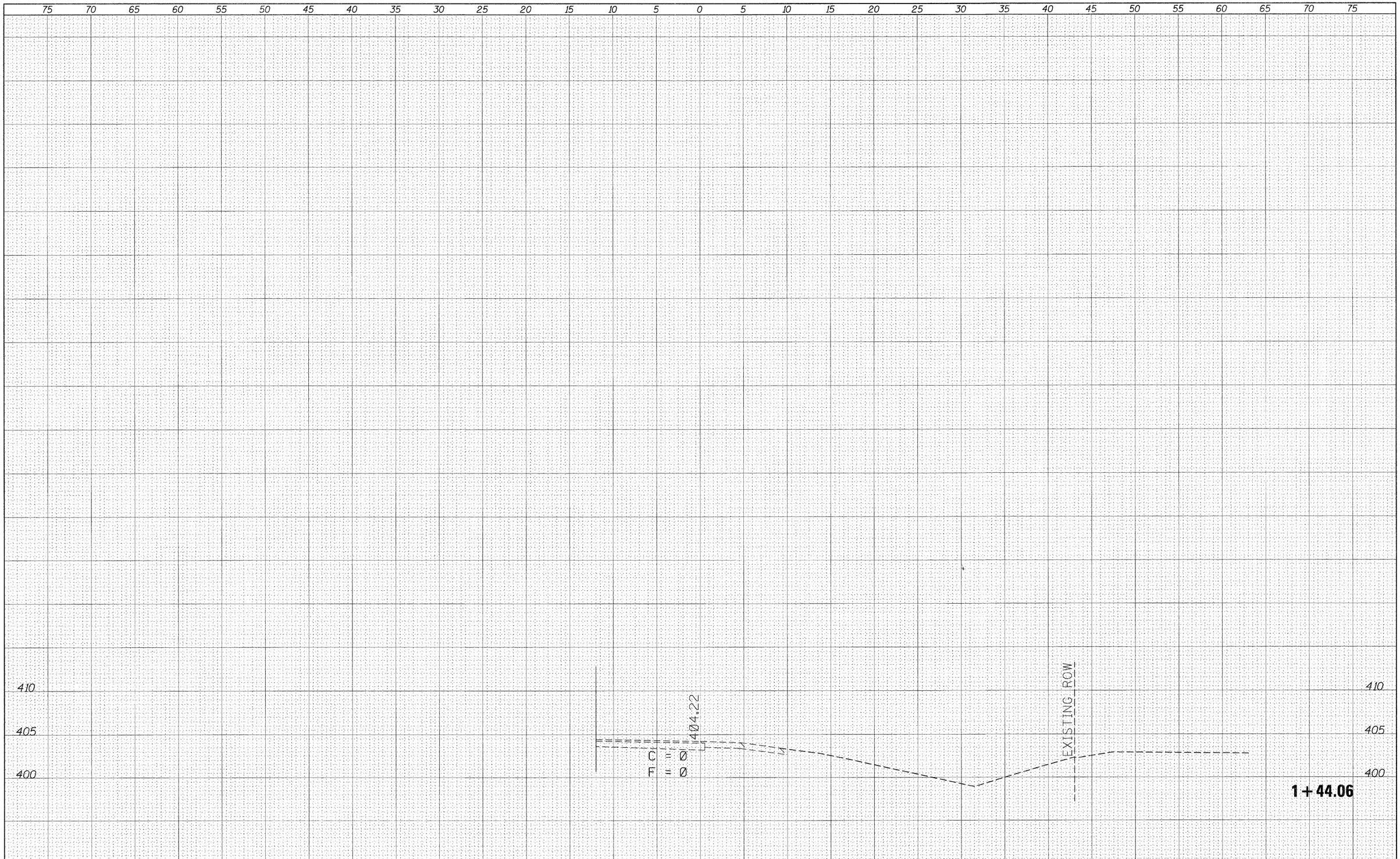

FILE NAME = c:\pw_work\pwidot\porterwc\dms49753\detourswquadbeau-xssht.dgn	USER NAME = porterwc	DESIGNED -	REVISED -
		DRAWN -	REVISED -
	PLOT SCALE = 5.0000 ' / in.	CHECKED -	REVISED -
	PLOT DATE = 11/3/2011	DATE -	REVISED -

STATE OF ILLINOIS
DEPARTMENT OF TRANSPORTATION

IL 13/127–BEAUCOUP RD. INTERSECTION
SOUTHWEST QUADRANT

SCALE: ____ SHEET ___ OF ___ SHEETS STA. 1+44.06 TO STA. 1+44.06

F.A.P. RTE.	SECTION	COUNTY	TOTAL SHEETS	SHEET NO.
686	114B-1	JACKSON	114	62
		CONTRACT NO. 78049		
		ILLINOIS FED. AID PROJECT		

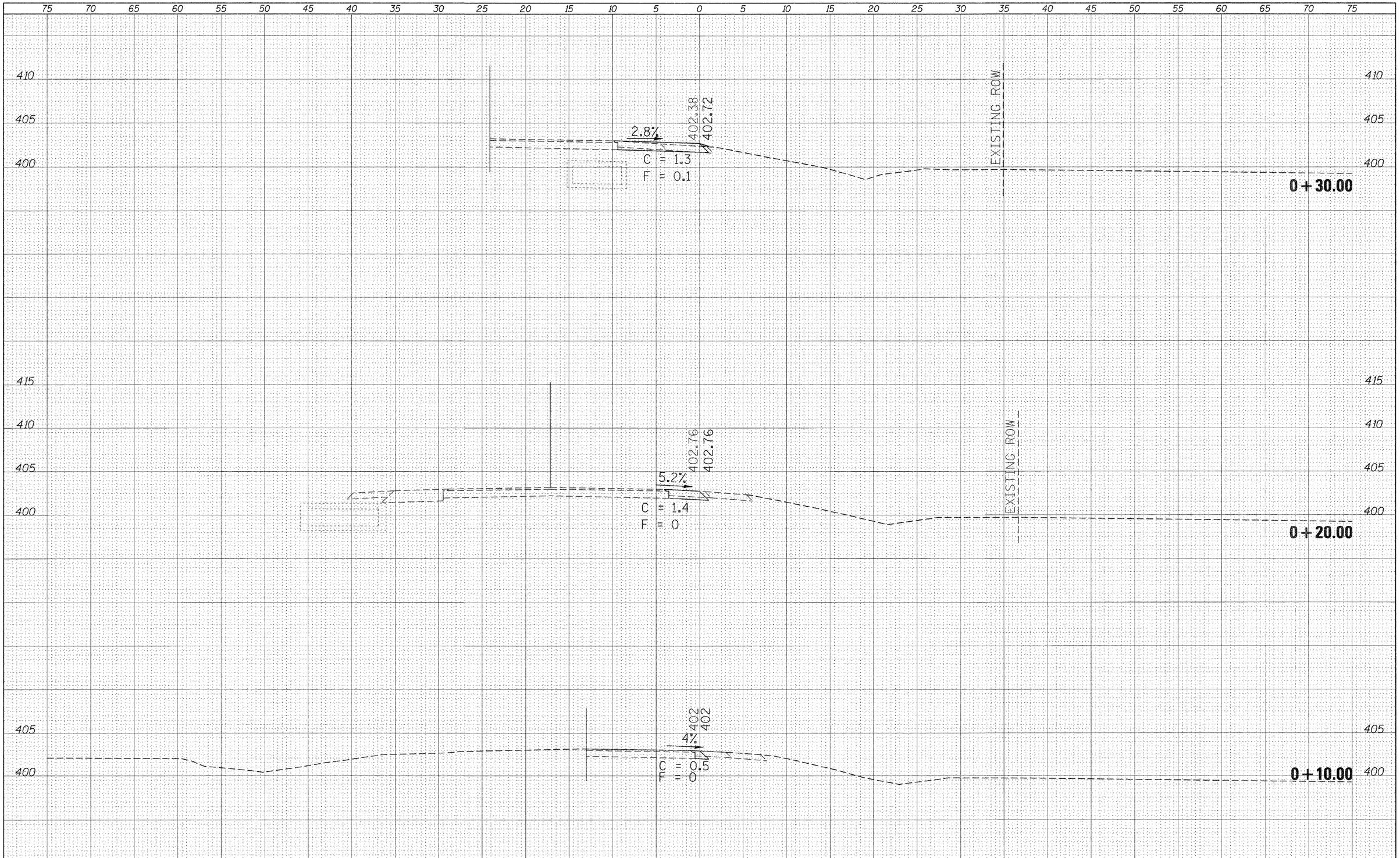

FINAL SURVEY	BY	DATE
SURVEYED		
PLOTTED		
TEMPLATE		
AREAS		
AREAS CHECKED		
NOTE BOOK NO.		

ORIGINAL SURVEY	BY	DATE
SURVEYED		
PLOTTED		
TEMPLATE		
AREAS		
AREAS CHECKED		
NOTE BOOK NO.		

FILE NAME = c:\pw_work\pwidot\porterwc\dms49753\detournwquadbeau-xsht.dgn	USER NAME = porterwc	DESIGNED -	REVISED -
		DRAWN -	REVISED -
	PLOT SCALE = 5.0000 ' / in.	CHECKED -	REVISED -
	PLOT DATE = 11/3/2011	DATE -	REVISED -

STATE OF ILLINOIS
DEPARTMENT OF TRANSPORTATION

IL 13/127–BEAUCOUP RD. INTERSECTION
NORTHWEST QUADRANT

SCALE: ____ SHEET ___ OF ___ SHEETS STA. +10.00 TO STA. +30.00

F.A.P. RTE.	SECTION	COUNTY	TOTAL SHEETS	SHEET NO.
686	114B-1	JACKSON	114	63
		CONTRACT NO. 78049		
		ILLINOIS	FED. AID PROJECT	

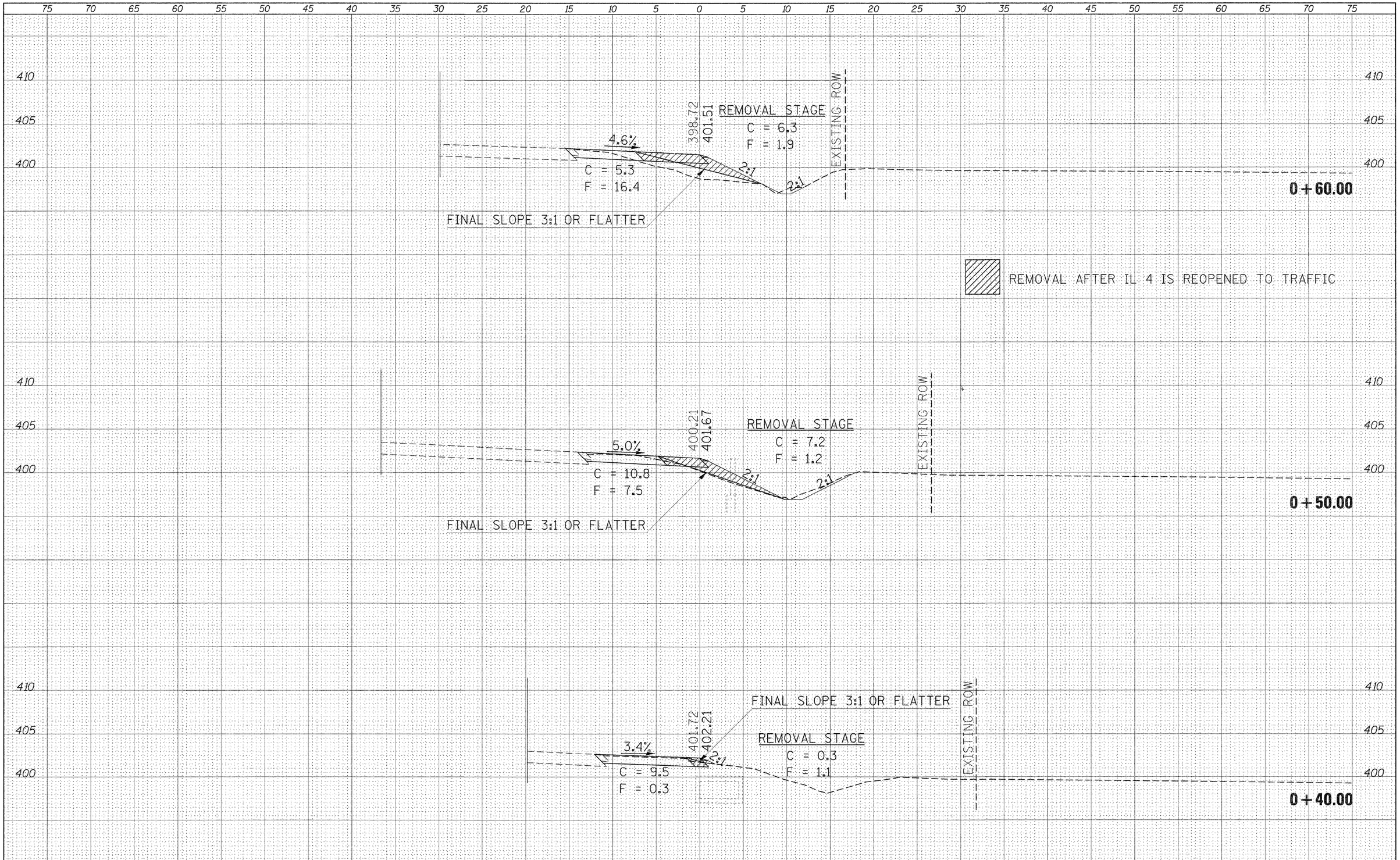

FINAL SURVEY	BY	DATE
SURVEYED		
PLOTTED		
TEMPLATE		
AREAS		
AREAS CHECKED		
NOTE BOOK NO.		

ORIGINAL SURVEY	BY	DATE
SURVEYED		
PLOTTED		
TEMPLATE		
AREAS		
AREAS CHECKED		
NOTE BOOK NO.		

FILE NAME = c:\pw_work\pwidot\porterwc\dms49753\detournwqudbeau-xsshtdgn	USER NAME = porterwc	DESIGNED -	REVISED -
		DRAWN -	REVISED -
	PLOT SCALE = 5.0000 ' / in.	CHECKED -	REVISED -
	PLOT DATE = 11/3/2011	DATE -	REVISED -

STATE OF ILLINOIS
DEPARTMENT OF TRANSPORTATION

IL 13/127–BEAUCOUP RD. INTERSECTION
NORTHWEST QUADRANT

SCALE: ____ SHEET ___ OF ___ SHEETS STA. +40.00 TO STA. +60.00

F.A.P. RTE.	SECTION	COUNTY	TOTAL SHEETS	SHEET NO.
686	114B-1	JACKSON	114	64

CONTRACT NO. 78049

ILLINOIS FED. AID PROJECT

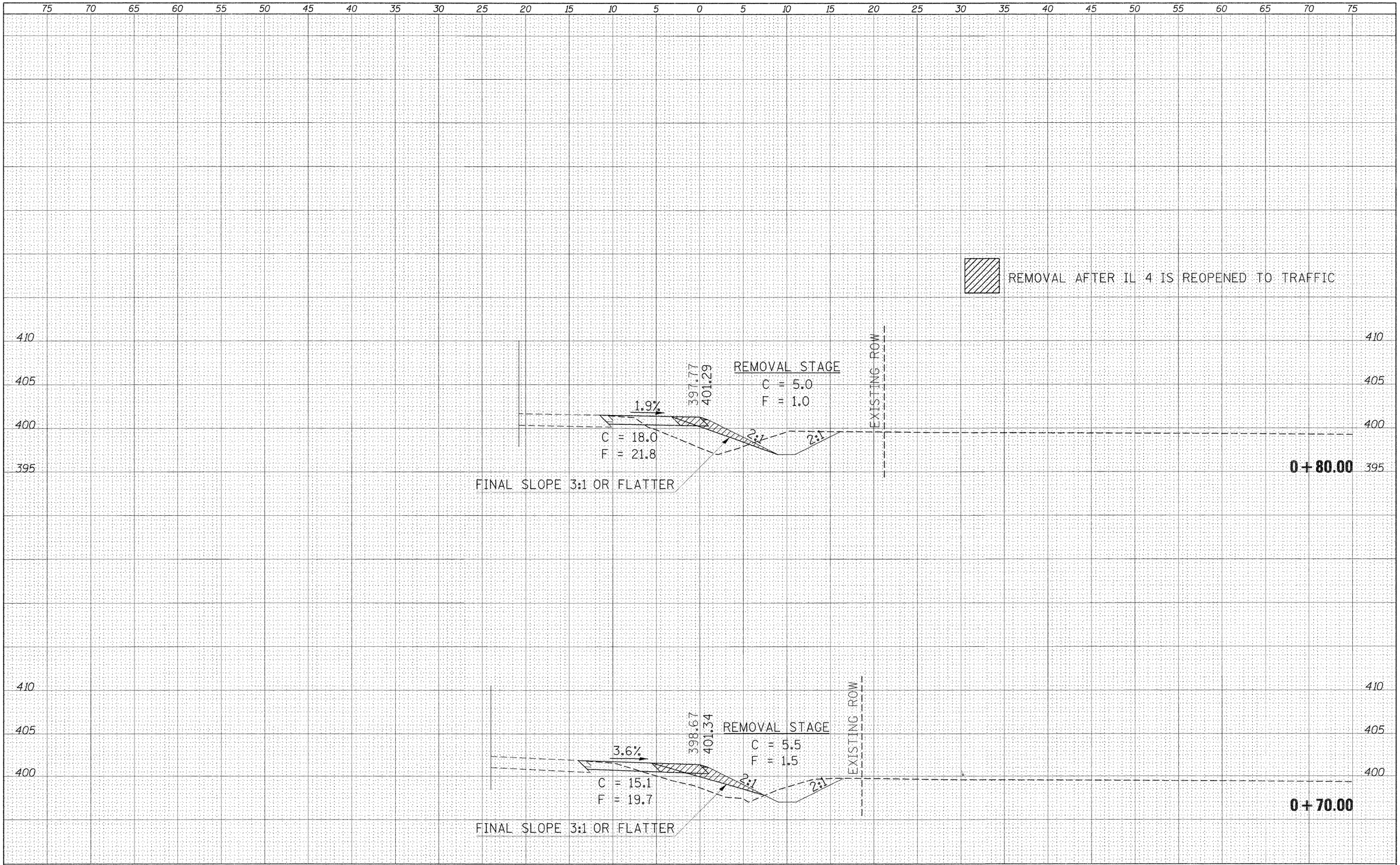

FINAL SURVEY	BY	DATE
SURVEYED		
PLOTTED		
TEMPLATE		
AREAS		
AREAS CHECKED		
NOTE BOOK NO.		

ORIGINAL SURVEY	BY	DATE
SURVEYED		
PLOTTED		
TEMPLATE		
AREAS		
AREAS CHECKED		
NOTE BOOK NO.		

FILE NAME = c:\pw_work\pwidot\porterwc\dms49753\detournwquadbeaurxsht.dgn	USER NAME - porterwc	DESIGNED -	REVISED -
		DRAWN -	REVISED -
	PLOT SCALE = 5.0000 ' / in.	CHECKED -	REVISED -
	PLOT DATE = 11/3/2011	DATE -	REVISED -

STATE OF ILLINOIS
DEPARTMENT OF TRANSPORTATION

IL 13/127–BEAUCOUP RD. INTERSECTION
NORTHWEST QUADRANT

SCALE: ____ SHEET ___ OF ___ SHEETS STA. +70.00 TO STA. +80.00

F.A.P. RTE.	SECTION	COUNTY	TOTAL SHEETS	SHEET NO.
686	114B-1	JACKSON	114	65
		CONTRACT NO. 78049		
		ILLINOIS FED. AID PROJECT		

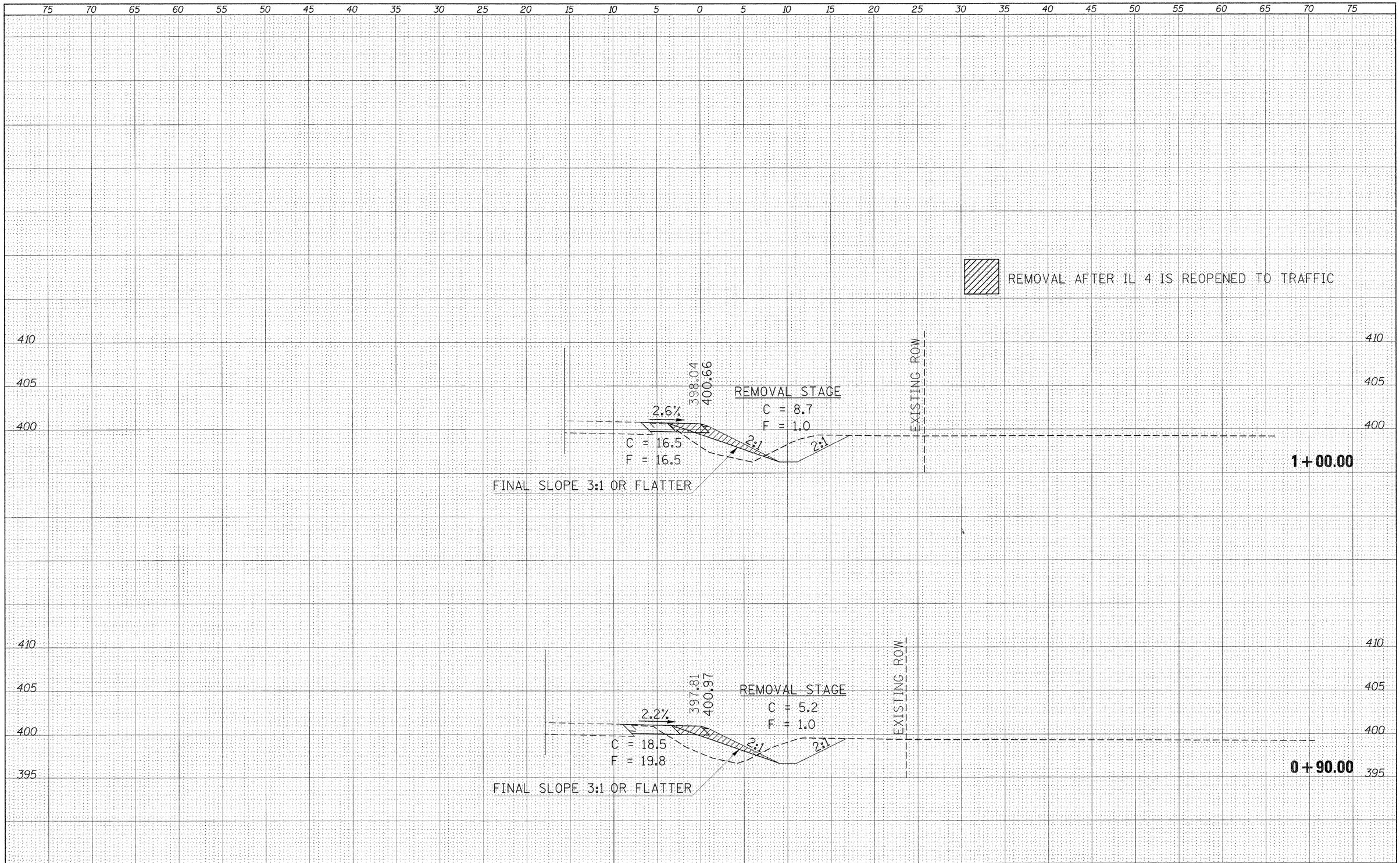

FINAL SURVEY	BY	DATE
SURVEYED		
PLOTTED		
TEMPLATE		
AREAS		
AREAS CHECKED		
NOTE BOOK NO.		

ORIGINAL SURVEY	BY	DATE
SURVEYED		
PLOTTED		
TEMPLATE		
AREAS		
AREAS CHECKED		
NOTE BOOK NO.		

FILE NAME = c:\pw_work\pwidot\porterwc\dms49753\detournwquadbeaurxsht.dgn	USER NAME = porterwc	DESIGNED -	REVISED -
		DRAWN -	REVISED -
	PLOT SCALE = 5.0000 ' / in.	CHECKED -	REVISED -
	PLOT DATE = 11/3/2011	DATE -	REVISED -

STATE OF ILLINOIS
DEPARTMENT OF TRANSPORTATION

IL 13/127–BEAUCOUP RD. INTERSECTION
NORTHWEST QUADRANT

SCALE: ____ SHEET ___ OF ___ SHEETS STA. +90.00 TO STA. 1+00.00

F.A.P. RTE.	SECTION	COUNTY	TOTAL SHEETS	SHEET NO.
686	114B-1	JACKSON	114	66
		CONTRACT NO. 78049		
		ILLINOIS	FED. AID PROJECT	

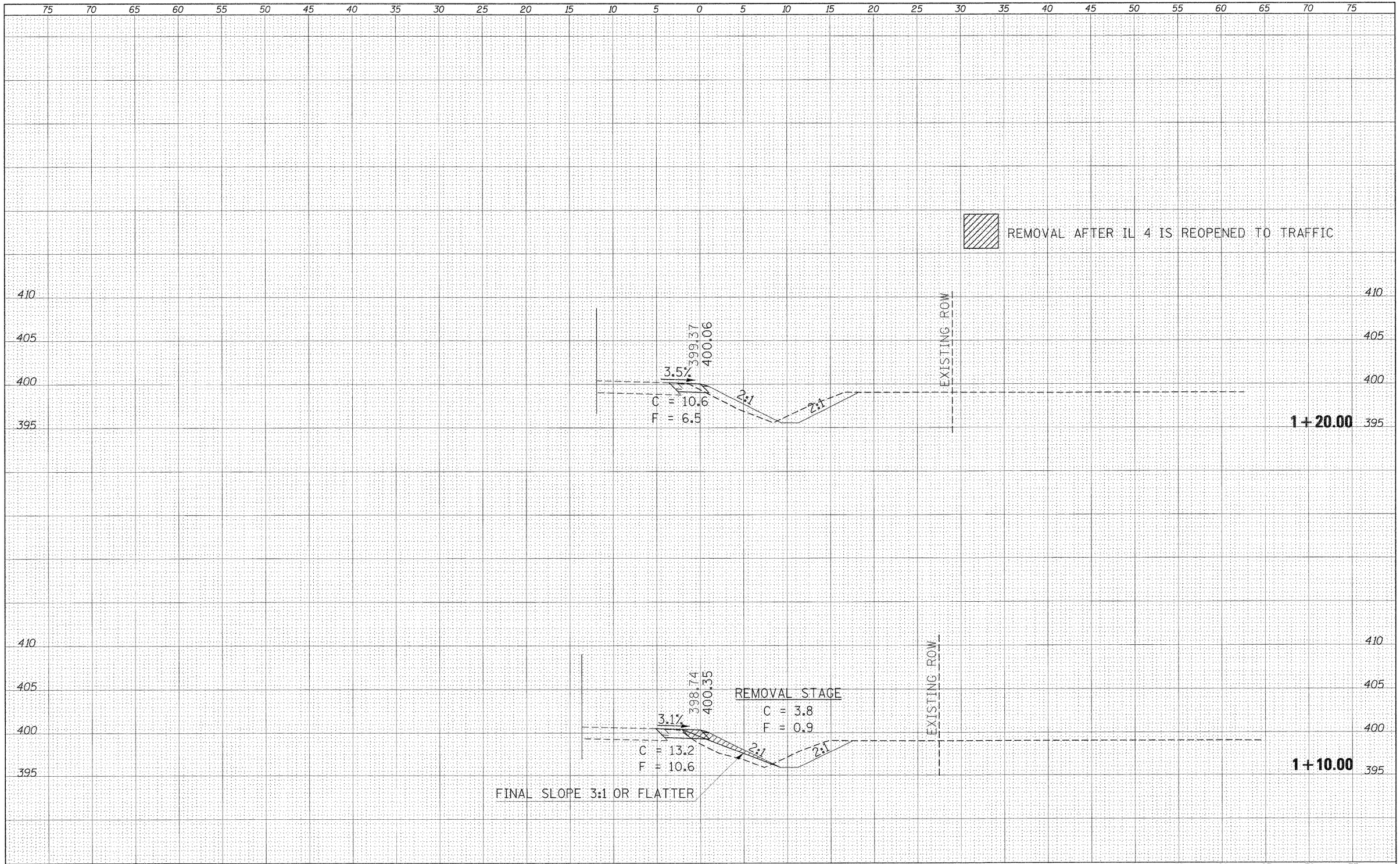

FINAL SURVEY	BY	DATE
SURVEYED		
PLOTTED		
TEMPLATE		
AREAS		
AREAS CHECKED		
NOTE BOOK NO.		

ORIGINAL SURVEY	BY	DATE
SURVEYED		
PLOTTED		
TEMPLATE		
AREAS		
AREAS CHECKED		
NOTE BOOK NO.		

FILE NAME = c:\pw_work\pwidot\porterwc\dms19753\detournwquadbeau-xsht.dgn	USER NAME = porterwc	DESIGNED -	REVISED -
		DRAWN -	REVISED -
	PLOT SCALE = 5.0000 ' / in.	CHECKED -	REVISED -
	PLOT DATE = 11/3/2011	DATE -	REVISED -

STATE OF ILLINOIS
DEPARTMENT OF TRANSPORTATION

IL 13/127–BEAUCOUP RD. INTERSECTION
NORTHWEST QUADRANT

SCALE: ____ SHEET ___ OF ___ SHEETS STA. 1+10.00 TO STA. 1+20.00

F.A.P. RTE.	SECTION	COUNTY	TOTAL SHEETS	SHEET NO.
686	114B-1	JACKSON	114	67
		CONTRACT NO. 78049		
	ILLINOIS	FED. AID PROJECT		

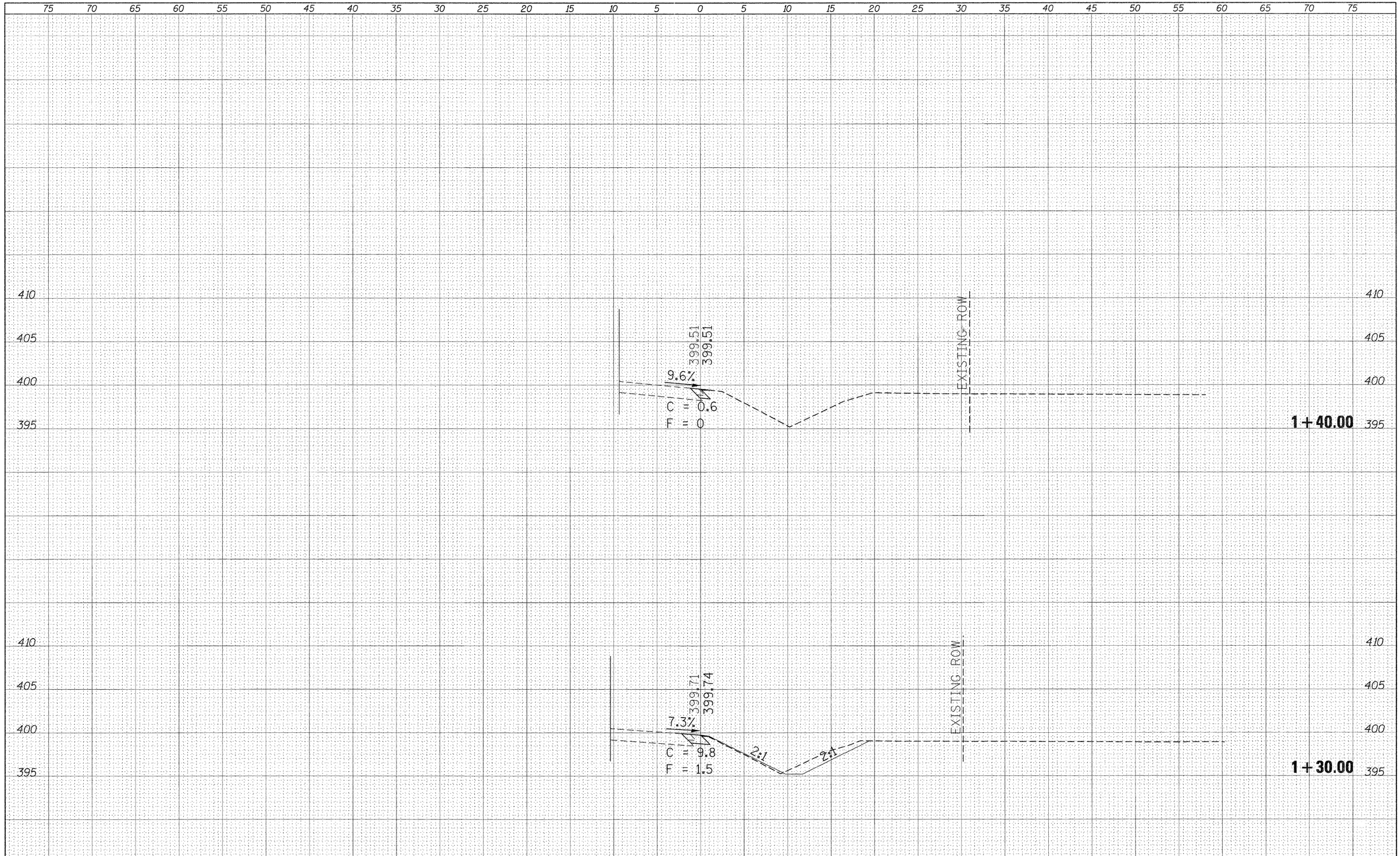

FINAL SURVEY	BY	DATE
SURVEYED		
PLOTTED		
NOTE BOOK TEMPLATE		
AREAS		
AREAS CHECKED		
NO.		

ORIGINAL SURVEY	BY	DATE
SURVEYED		
PLOTTED		
NOTE BOOK TEMPLATE		
AREAS		
AREAS CHECKED		
NO.		

FILE NAME =	USER NAME = porterwc	DESIGNED -	REVISED -
c:\pw_work\pwidot\porterwc\dms49753\detournwqubeau-xsht.dgn		DRAWN -	REVISED -
	PLOT SCALE = 5.0000 ' / in.	CHECKED -	REVISED -
	PLOT DATE = 11/3/2011	DATE -	REVISED -

STATE OF ILLINOIS
DEPARTMENT OF TRANSPORTATION

IL 13/127–BEAUCOUP RD. INTERSECTION
NORTHWEST QUADRANT

SCALE: ____ SHEET ___ OF ___ SHEETS STA. 1+30.00 TO STA. 1+40.00

F.A.P. RTE.	SECTION	COUNTY	TOTAL SHEETS	SHEET NO.
686	114B-1	JACKSON	114	68
		CONTRACT NO. 78049		
		ILLINOIS FED. AID PROJECT		

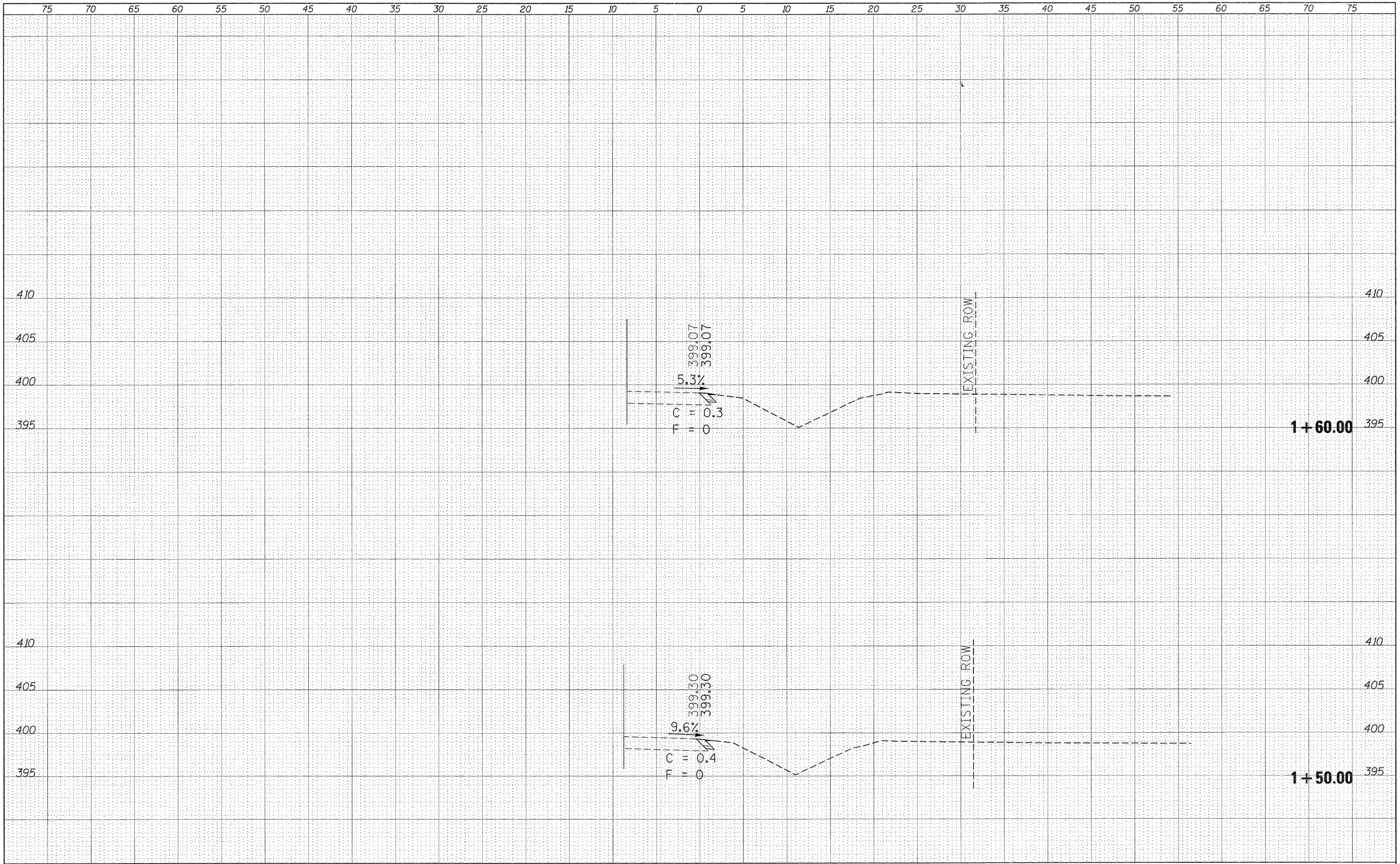

FINAL SURVEY	BY	DATE
SURVEYED		
PLOTTED		
TEMPLATE		
AREAS		
AREAS CHECKED		
NOTE BOOK NO.		

ORIGINAL SURVEY	BY	DATE
SURVEYED		
PLOTTED		
TEMPLATE		
AREAS		
AREAS CHECKED		
NOTE BOOK NO.		

FILE NAME = c:\pw_work\pwidot\porterwc\dms49753\detournwquadbeaux-ssht.dgn	USER NAME = porterwc	DESIGNED -	REVISED -
		DRAWN -	REVISED -
	PLOT SCALE = 5.0000 ' / in.	CHECKED -	REVISED -
	PLOT DATE = 11/3/2011	DATE -	REVISED -

STATE OF ILLINOIS
DEPARTMENT OF TRANSPORTATION

IL 13/127–BEAUCOUP RD. INTERSECTION
NORTHWEST QUADRANT

SCALE: ____ SHEET ___ OF ___ SHEETS STA. 1+50.00 TO STA. 1+60.00

F.A.P. RTE.	SECTION	COUNTY	TOTAL SHEETS	SHEET NO.
686	114B-1	JACKSON	114	69

CONTRACT NO. 78049

ILLINOIS FED. AID PROJECT

FINAL SURVEY		BY	DATE
NOTE BOOK	SURVEYED		
	PLOTTED		
	TEMPLATE		
	AREAS		
NO.	AREAS CHECKED		

ORIGINAL SURVEY		BY	DATE
NOTE BOOK	SURVEYED		
	PLOTTED		
	TEMPLATE		
	AREAS		
NO.	AREAS CHECKED		

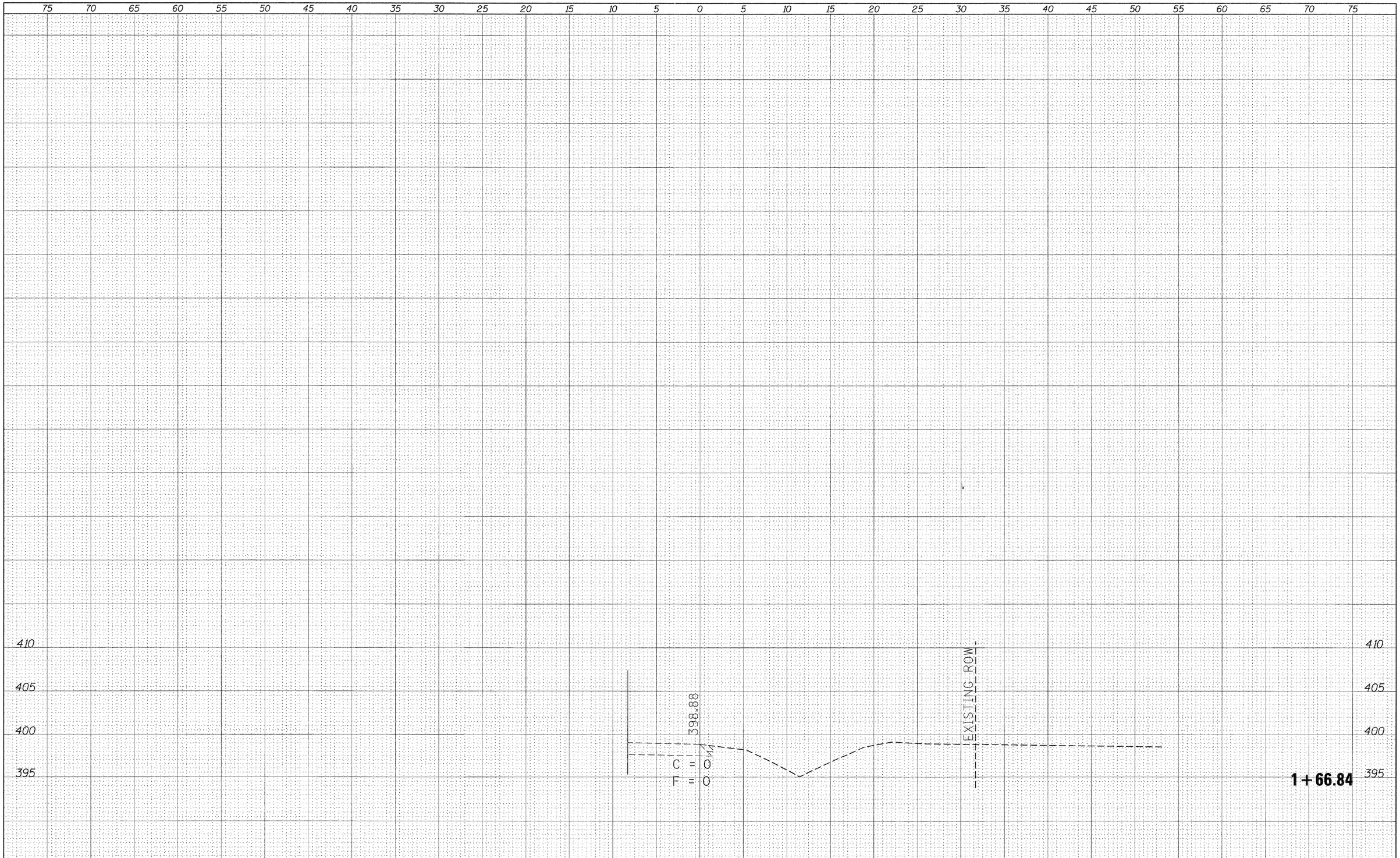

FILE NAME = c:\pw_work\pwidot\porterwc\dms49753\detournwquadbeaurxsshet.dgn	USER NAME = porterwc	DESIGNED -	REVISED -
		DRAWN -	REVISED -
	PLOT SCALE = 5.0000 ' / in.	CHECKED -	REVISED -
	PLOT DATE = 11/3/2011	DATE -	REVISED -

STATE OF ILLINOIS
DEPARTMENT OF TRANSPORTATION

IL 13/127–BEAUCOUP RD. INTERSECTION
NORTHWEST QUADRANT

SCALE: ____ SHEET ___ OF ___ SHEETS STA. 1+66.84 TO STA. 1+66.84

F.A.P. RTE.	SECTION	COUNTY	TOTAL SHEETS	SHEET NO.
686	114B-1	JACKSON	114	70

CONTRACT NO. 78049

ILLINOIS | FED. AID PROJECT

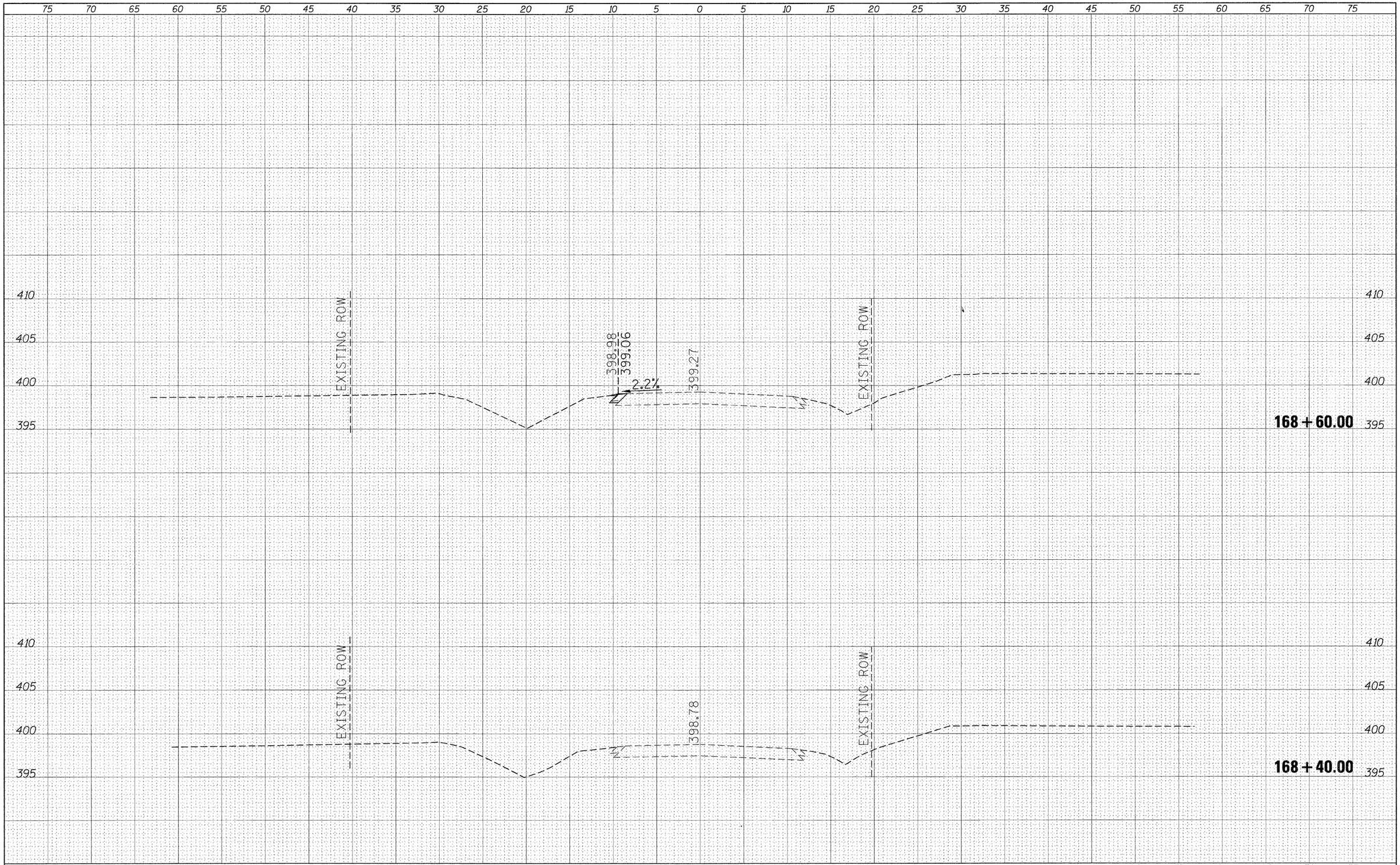

FINAL SURVEY	BY	DATE
SURVEYED		
PLOTTED		
TEMPLATE		
AREAS		
AREAS CHECKED		
NOTE BOOK		
NO.		

ORIGINAL SURVEY	BY	DATE
SURVEYED		
PLOTTED		
TEMPLATE		
AREAS		
AREAS CHECKED		
NOTE BOOK		
NO.		

FILE NAME = c:\pw_work\pwidot\porterwc\dms49753\detourbeaucoup-xsht.dgn	USER NAME = porterwc	DESIGNED -	REVISED -
		DRAWN -	REVISED -
	PLOT SCALE = 5.0000 ' / in.	CHECKED -	REVISED -
	PLOT DATE = 10/18/2011	DATE -	REVISED -

STATE OF ILLINOIS
DEPARTMENT OF TRANSPORTATION

IL 13/127–BEAUCOUP RD. INTERSECTION
ALONG BEAUCOUP RD.

SCALE: ____ SHEET ___ OF ___ SHEETS STA. 168+40.00 TO STA. 168+60.00

F.A.P. RTE.	SECTION	COUNTY	TOTAL SHEETS	SHEET NO.
686	114B-1	JACKSON	114	71
		CONTRACT NO. 78049		
		ILLINOIS FED. AID PROJECT		

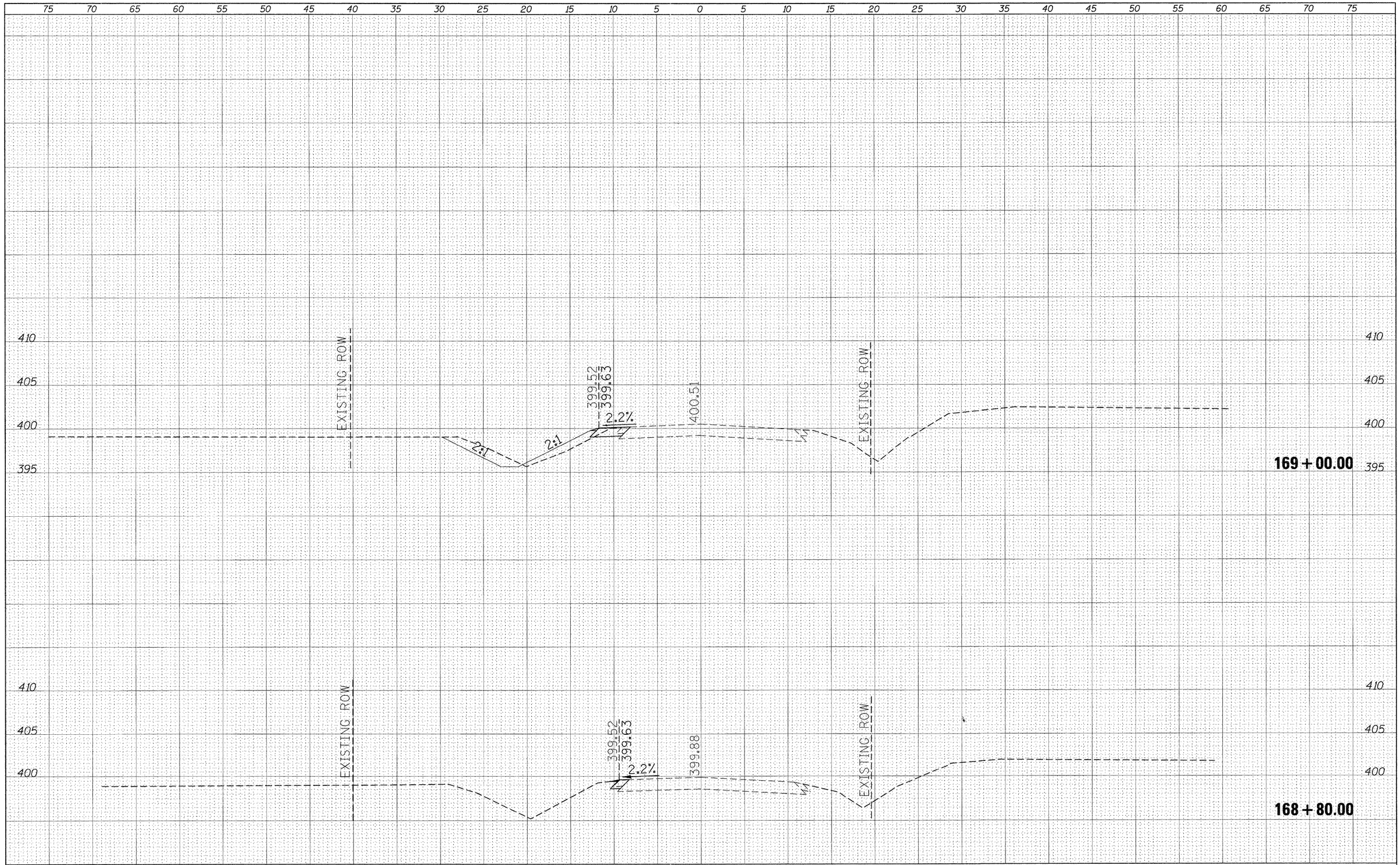

FINAL SURVEY	BY	DATE
SURVEYED		
PLOTTED		
TEMPLATE		
AREAS		
AREAS CHECKED		
NOTE BOOK NO.		

ORIGINAL SURVEY	BY	DATE
SURVEYED		
PLOTTED		
TEMPLATE		
AREAS		
AREAS CHECKED		
NOTE BOOK NO.		

FILE NAME = c:\pw_work\pwidot\porterwc\dms49753\detourbeaucoup-xsshtdgn

USER NAME = porterwc
PLOT SCALE = 5.0000 ' / in.
PLOT DATE = 10/18/2011

DESIGNED -
DRAWN -
CHECKED -
DATE -

REVISED -
REVISED -
REVISED -
REVISED -

STATE OF ILLINOIS
DEPARTMENT OF TRANSPORTATION

IL 13/127–BEAUCOUP RD. INTERSECTION
ALONG BEAUCOUP RD.

SCALE: ____ SHEET ____ OF ____ SHEETS STA. 168+80.00 TO STA. 169+00.00

F.A.P. RTE.	SECTION	COUNTY	TOTAL SHEETS	SHEET NO.
686	114B-1	JACKSON	114	72

CONTRACT NO. 78049

ILLINOIS FED. AID PROJECT

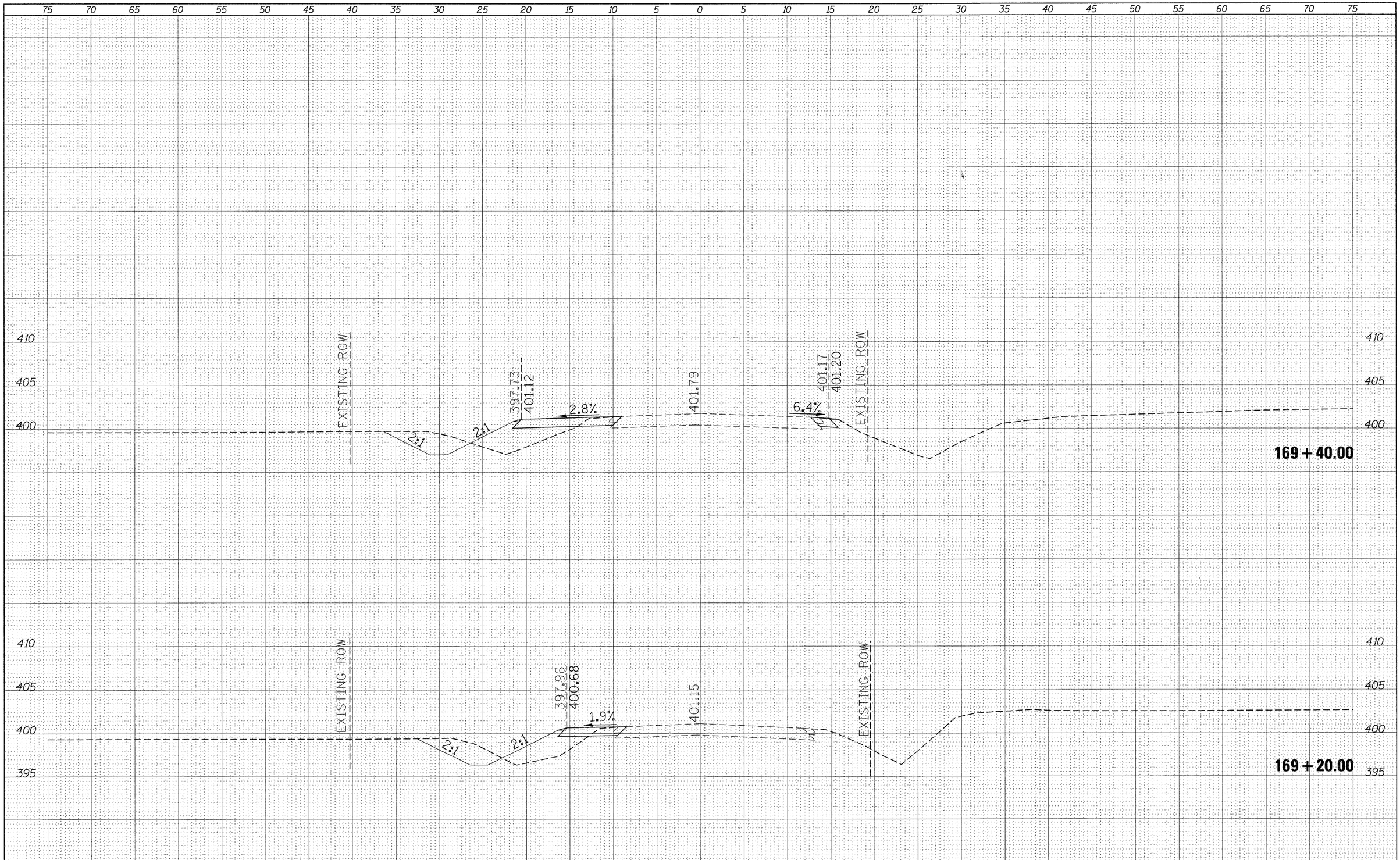

FINAL SURVEY	BY	DATE
SURVEYED		
PLOTTED		
TEMPLATE		
AREAS		
AREAS CHECKED		
NOTE BOOK NO.		

ORIGINAL SURVEY	BY	DATE
SURVEYED		
PLOTTED		
TEMPLATE		
AREAS		
AREAS CHECKED		
NOTE BOOK NO.		

FILE NAME = c:\pw_work\pwidot\porterwc\dms49753\detourbeaucoup-ssht.dgn	USER NAME = porterwc	DESIGNED -	REVISED -
		DRAWN -	REVISED -
	PLOT SCALE = 5.0000 ' / in.	CHECKED -	REVISED -
	PLOT DATE = 10/18/2011	DATE -	REVISED -

STATE OF ILLINOIS
DEPARTMENT OF TRANSPORTATION

IL 13/127–BEAUCOUP RD. INTERSECTION
ALONG BEAUCOUP RD.

SCALE: ____ SHEET ___ OF ___ SHEETS STA. 169+20.00 TO STA. 169+40.00

F.A.P. RTE.	SECTION	COUNTY	TOTAL SHEETS	SHEET NO.
686	114B-1	JACKSON	114	73

CONTRACT NO. 78049

ILLINOIS FED. AID PROJECT

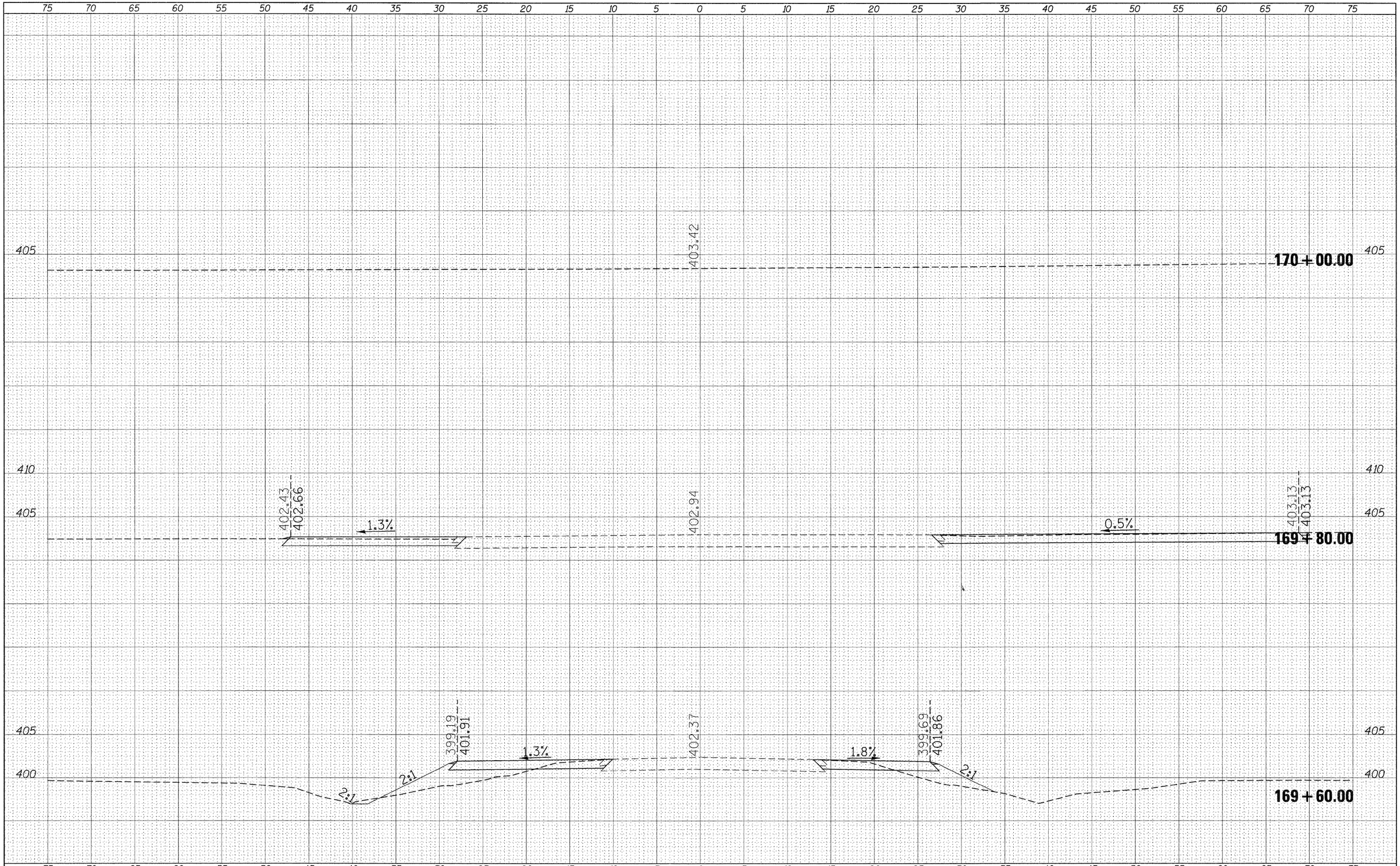

FINAL SURVEY	BY	DATE
SURVEYED		
PLOTTED		
TEMPLATE		
AREAS		
AREAS CHECKED		
NOTE BOOK NO.		

ORIGINAL SURVEY	BY	DATE
SURVEYED		
PLOTTED		
TEMPLATE		
AREAS		
AREAS CHECKED		
NOTE BOOK NO.		

FILE NAME = c:\pw_work\pwidot\porterwc\dms49753\detourbeaucoup-xsht.dgn	USER NAME = porterwc	DESIGNED -	REVISED -
		DRAWN -	REVISED -
	PLOT SCALE = 5.0000 ' / in.	CHECKED -	REVISED -
	PLOT DATE = 10/18/2011	DATE -	REVISED -

STATE OF ILLINOIS
DEPARTMENT OF TRANSPORTATION

IL 13/127-BEAUCOUP RD. INTERSECTION
ALONG BEAUCOUP RD.

SCALE: ____ SHEET ___ OF ___ SHEETS STA. 169+60.00 TO STA. 170+00.00

F.A.P. RTE.	SECTION	COUNTY	TOTAL SHEETS	SHEET NO.
686	114B-1	JACKSON	114	74

CONTRACT NO. 78049

ILLINOIS FED. AID PROJECT

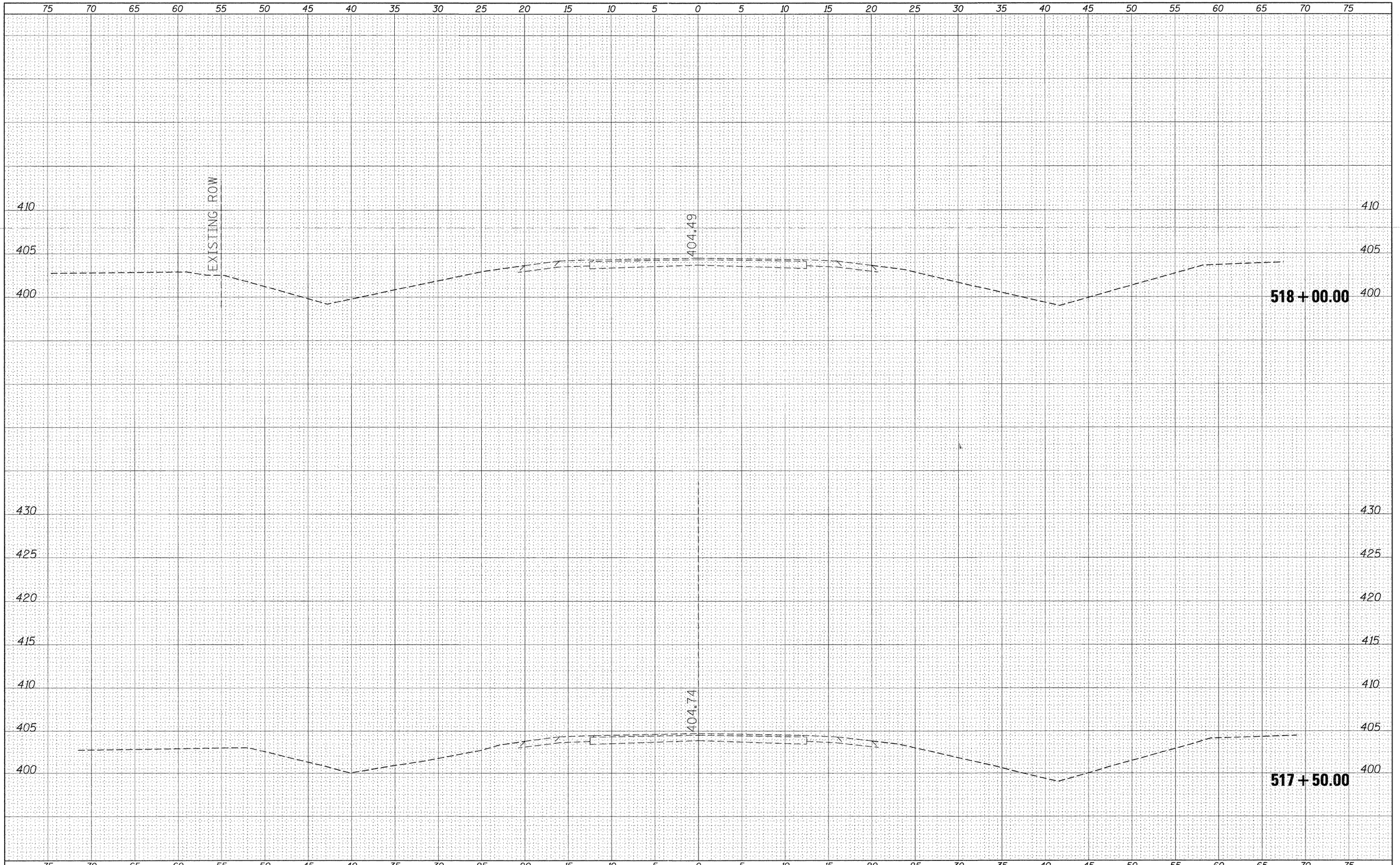

FINAL SURVEY	BY	DATE
SURVEYED		
PLOTTED		
TEMPLATE		
AREAS		
AREAS CHECKED		
NOTE BOOK NO.		

ORIGINAL SURVEY	BY	DATE
SURVEYED		
PLOTTED		
TEMPLATE		
AREAS		
AREAS CHECKED		
NOTE BOOK NO.		

FILE NAME = c:\pw_work\pwidot\porterwc\dms49753\detour1127-xsht.dgn	USER NAME = porterwc	DESIGNED -	REVISED -
		DRAWN -	REVISED -
	PLOT SCALE = 5.0000 ' / in.	CHECKED -	REVISED -
	PLOT DATE = 10/18/2011	DATE -	REVISED -

STATE OF ILLINOIS
DEPARTMENT OF TRANSPORTATION

IL 13/127–BEAUCOUP RD. INTERSECTION
ALONG IL 13/127

SCALE: ____ SHEET ___ OF ___ SHEETS STA. 517+50.00 TO STA. 518+00.00

F.A.P. RTE.	SECTION	COUNTY	TOTAL SHEETS	SHEET NO.
686	114B-1	JACKSON	114	75
		CONTRACT NO. 78049		
		ILLINOIS FED. AID PROJECT		

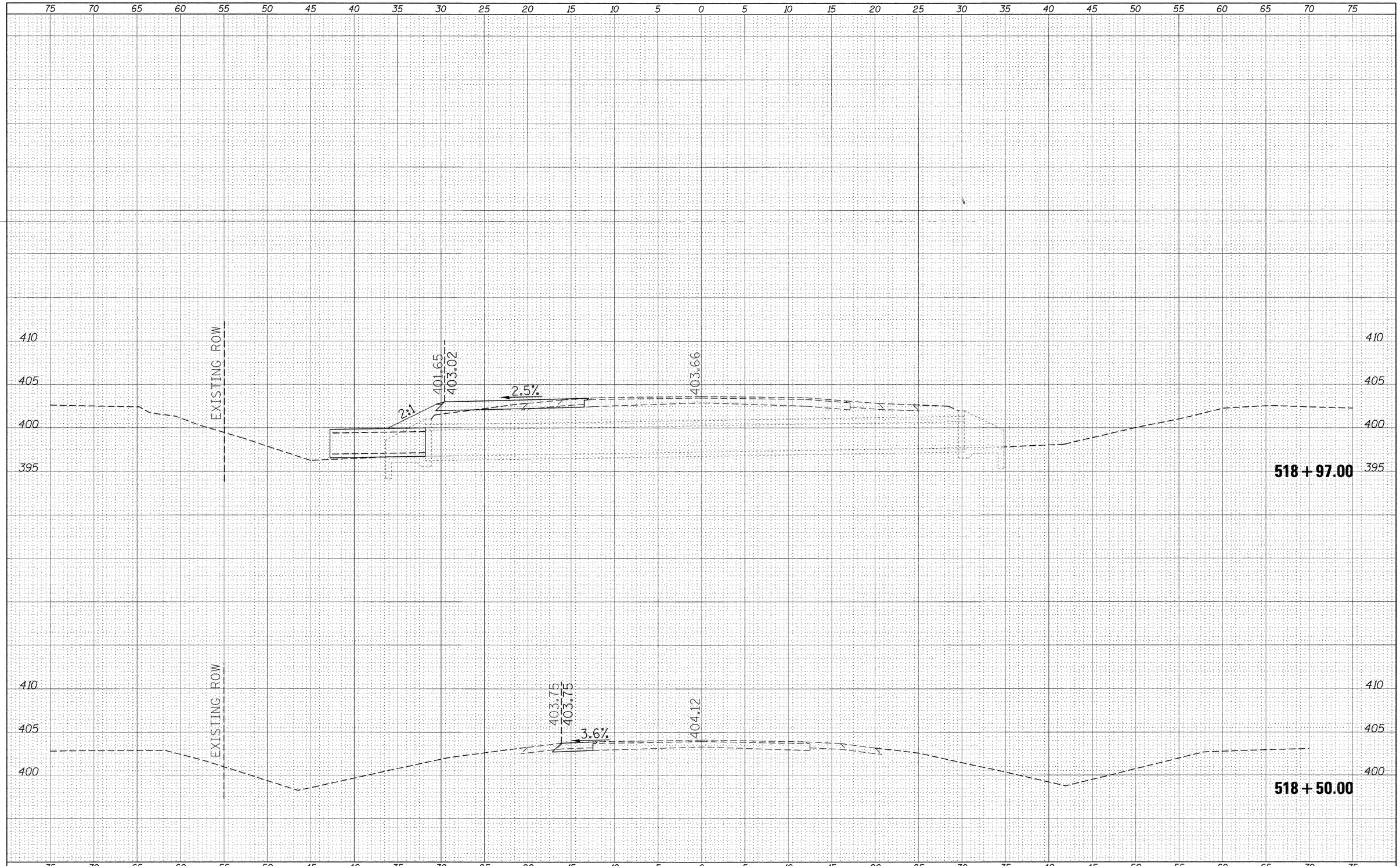

FINAL SURVEY		BY	DATE
NOTE BOOK NO.	SURVEYED		
	PLOTTED		
	TEMPLATE		
	AREAS		
	AREAS CHECKED		

ORIGINAL SURVEY		BY	DATE
NOTE BOOK NO.	SURVEYED		
	PLOTTED		
	TEMPLATE		
	AREAS		
	AREAS CHECKED		

FILE NAME = c:\pw_work\pwidot\porterwc\dms49753\detour1127-xsht.dgn	USER NAME = porterwc	DESIGNED -	REVISED -
		DRAWN -	REVISED -
	PLOT SCALE = 5.0000 ' / in.	CHECKED -	REVISED -
	PLOT DATE = 10/18/2011	DATE -	REVISED -

STATE OF ILLINOIS
DEPARTMENT OF TRANSPORTATION

IL 13/127–BEAUCOUP RD INTERSECTION ALONG IL13/127

SCALE: ____ SHEET ___ OF ___ SHEETS STA. 518+50.00 TO STA. 518+97.00

F.A.P. RTE.	SECTION	COUNTY	TOTAL SHEETS	SHEET NO.
686	114B-1	JACKSON	114	76
		CONTRACT NO. 78049		
		ILLINOIS FED. AID PROJECT		

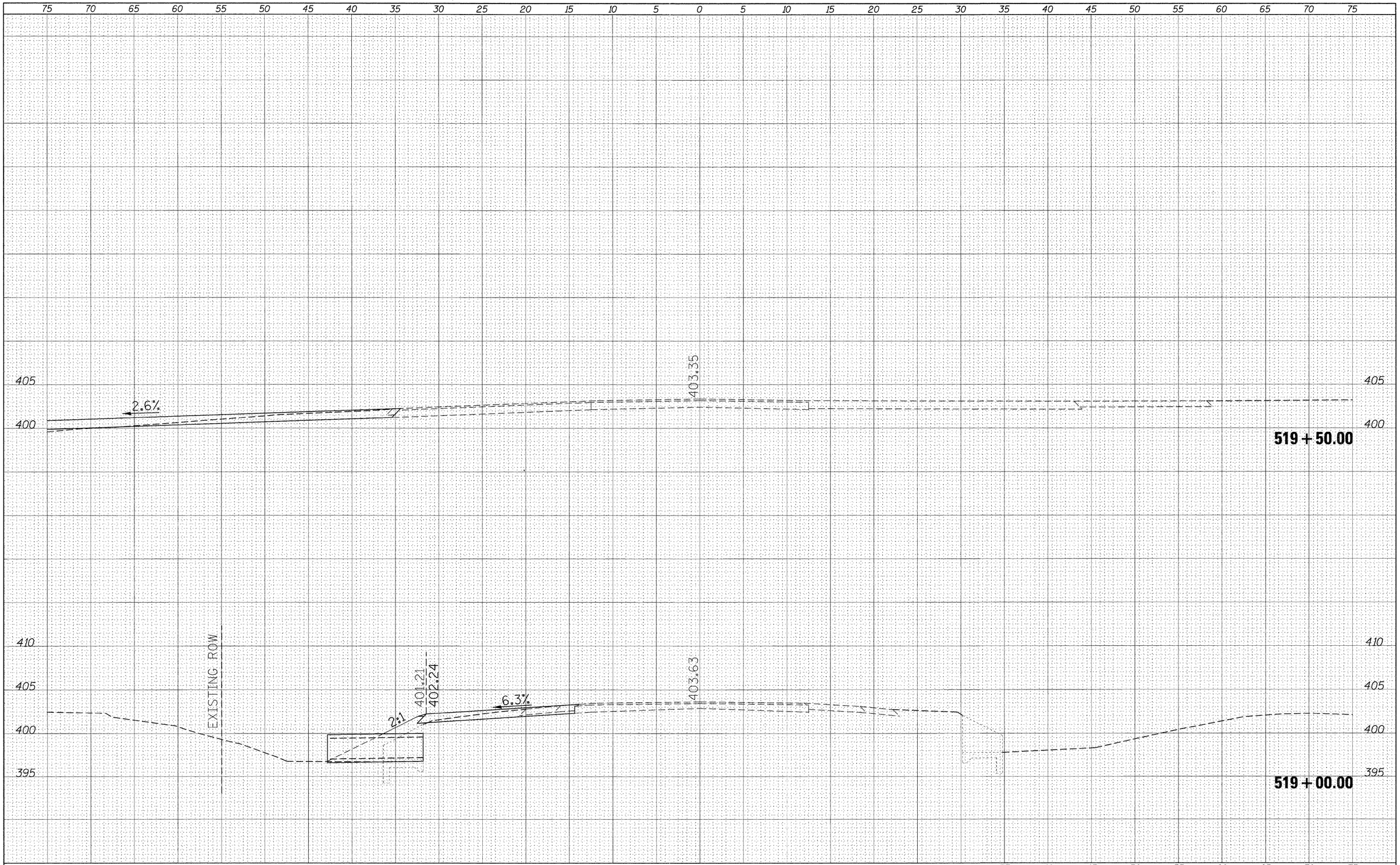

FINAL SURVEY	BY	DATE
SURVEYED		
PLOTTED		
TEMPLATE		
AREAS		
AREAS CHECKED		
NOTE BOOK NO.		

ORIGINAL SURVEY	BY	DATE
SURVEYED		
PLOTTED		
TEMPLATE		
AREAS		
AREAS CHECKED		
NOTE BOOK NO.		

FILE NAME = c:\pw_work\pwidot\porterwc\dms49753\detour1127xsht.dgn	USER NAME = porterwc	DESIGNED -	REVISED -
		DRAWN -	REVISED -
	PLOT SCALE = 5.0000 ' / in.	CHECKED -	REVISED -
	PLOT DATE = 10/18/2011	DATE -	REVISED -

STATE OF ILLINOIS
DEPARTMENT OF TRANSPORTATION

IL 13/127–BEAUCOUP RD. INTERSECTION
ALONG IL 13/127

SCALE: ____ SHEET ___ OF ___ SHEETS STA. 519+00.00 TO STA. 519+50.00

F.A.P. RTE.	SECTION	COUNTY	TOTAL SHEETS	SHEET NO.
686	114B-1	JACKSON	114	77

CONTRACT NO. 78049

ILLINOIS FED. AID PROJECT

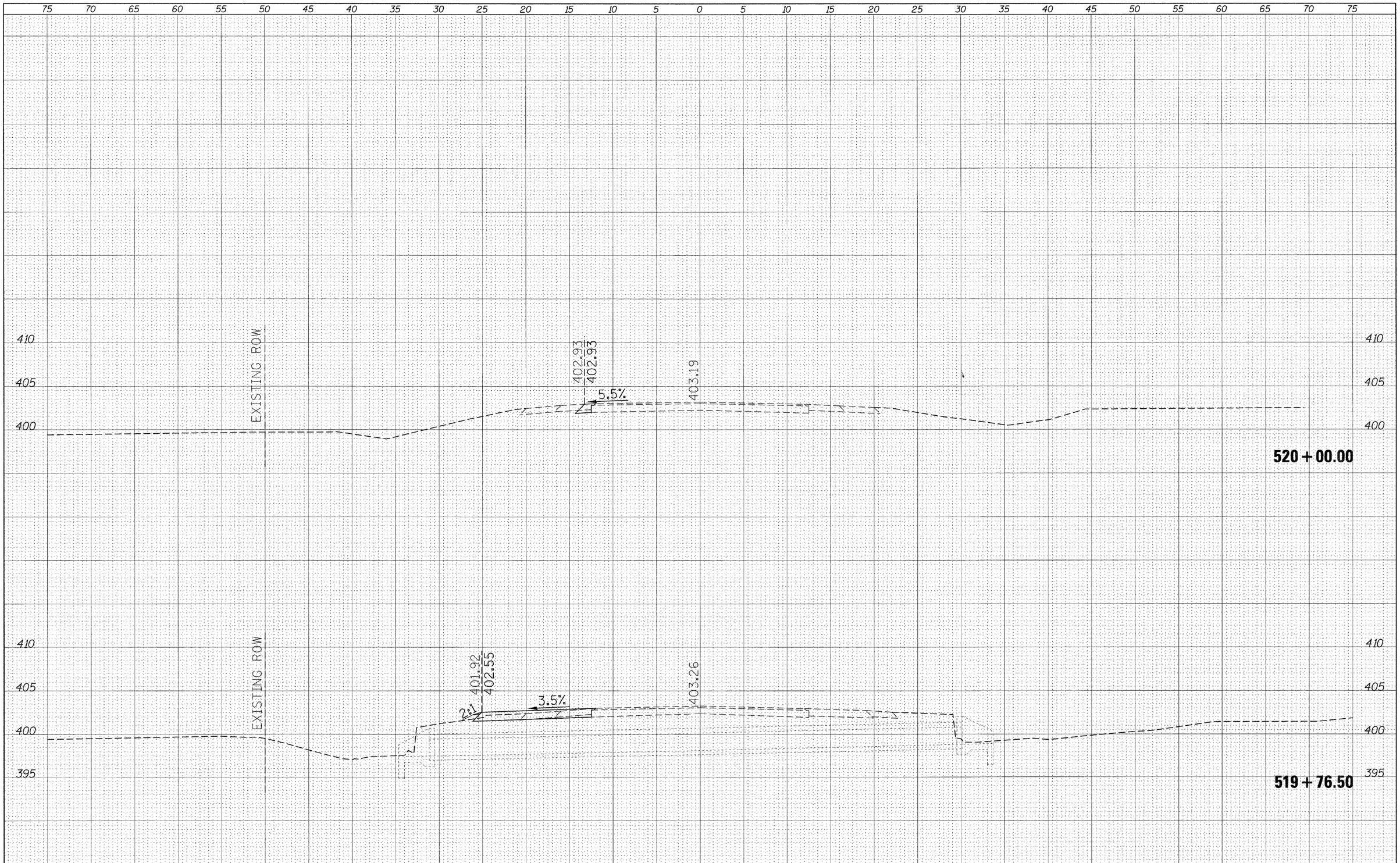

FINAL SURVEY	BY	DATE
SURVEYED		
PLOTTED		
TEMPLATE		
AREAS		
AREAS CHECKED		
NOTE BOOK NO.		

ORIGINAL SURVEY	BY	DATE
SURVEYED		
PLOTTED		
TEMPLATE		
AREAS		
AREAS CHECKED		
NOTE BOOK NO.		

FILE NAME = c:\pw_work\pwidot\porterwc\dms49753\detour11127-xssht.dgn	USER NAME = porterwc	DESIGNED -	REVISED -
		DRAWN -	REVISED -
	PLOT SCALE = 5.0000 ' / in.	CHECKED -	REVISED -
	PLOT DATE = 10/18/2011	DATE -	REVISED -

STATE OF ILLINOIS
DEPARTMENT OF TRANSPORTATION

IL 13/127–BEAUCOUP RD. INTERSECTION
ALONG IL 13/127

SCALE: ____ SHEET ___ OF ___ SHEETS STA. 519+76.50 TO STA. 520+00.00

F.A.P. RTE.	SECTION	COUNTY	TOTAL SHEETS	SHEET NO.
686	114B-1	JACKSON	114	78
		CONTRACT NO. 78049		
		ILLINOIS FED. AID PROJECT		

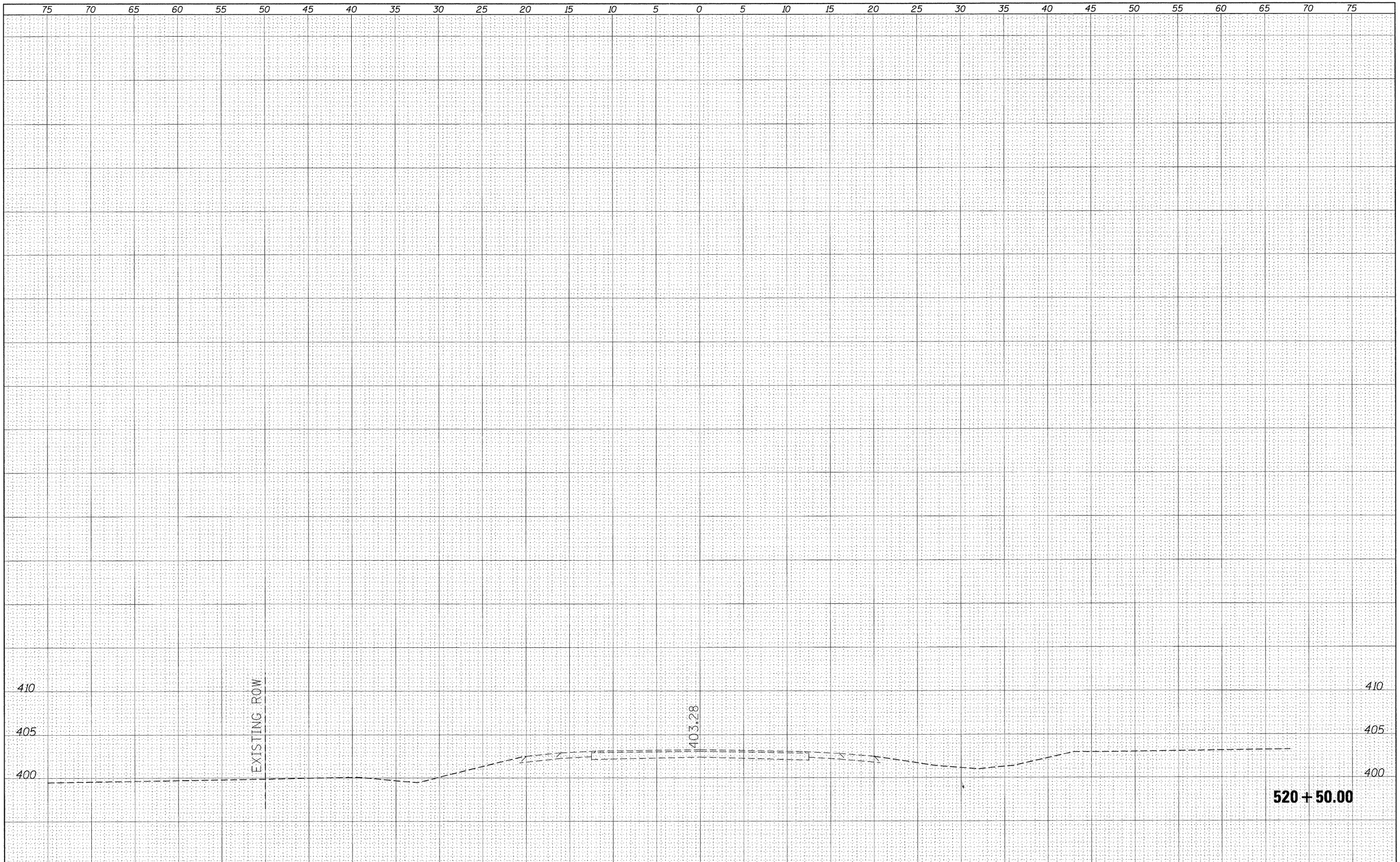

FINAL SURVEY	BY	DATE
SURVEYED		
PLOTTED		
TEMPLATE		
AREAS		
AREAS CHECKED		
NOTE BOOK NO.		

ORIGINAL SURVEY	BY	DATE
SURVEYED		
PLOTTED		
TEMPLATE		
AREAS		
AREAS CHECKED		
NOTE BOOK NO.		

FILE NAME = c:\pw_work\pwidot\porterwc\dms49753\detour11127-xsht.dgn	USER NAME = porterwc	DESIGNED -	REVISED -
		DRAWN -	REVISED -
	PLOT SCALE = 5.0000 ' / in.	CHECKED -	REVISED -
	PLOT DATE = 10/18/2011	DATE -	REVISED -

STATE OF ILLINOIS
DEPARTMENT OF TRANSPORTATION

IL 13/127–BEAUCOUP RD. INTERSECTION
ALONG IL 13/127

SCALE: ____ SHEET ___ OF ___ SHEETS STA. 520+50.00 TO STA. 520+50.00

F.A.P. RTE.	SECTION	COUNTY	TOTAL SHEETS	SHEET NO.
686	114B-1	JACKSON	114	79
		CONTRACT NO. 78049		
		ILLINOIS FED. AID PROJECT		

Bench Mark: Chiseled square in N.E. corner of SN 039-0042, approx. 0.5 miles west from intersection of Rte. 4/Rte. 127 "88" Elev. = 384.28

Existing Structure: SN 039-0042 was originally built in 1931. The structure consisted of 2-160' Penn trusses with 2-40' RCDG approach spans, 21' roadway on RC spill-thru abutments and solid concrete piers supported on timber piles. In 1983, the superstructure and part of substructure was replaced and four new wall piers were constructed to create an 8 simple-span PPC deck beam bridge. The structure is approximately 415'-6" back to back abutments and 35'-0" out to out deck width. The structure is to be removed and replaced. Traffic is to be detoured. No salvage.

DESIGN SCOUR ELEVATION TABLE

Design Scour Elevation (ft.)	W. Abut.	Pier 1	Pier 2	E. Abut.
	379.8	355.4	362.5	380.7

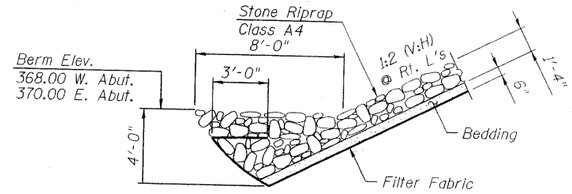

SECTION A-A

Typical at edges of Abutment Riprap Protection

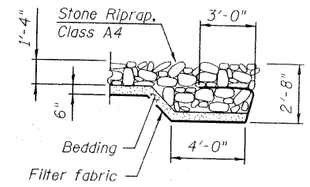

SECTION B-B

Typical at edges of Pier Riprap Protection

STATION 1119+95
BUILT 201_ BY
STATE OF ILLINOIS
F.A.P. ROUTE 686 SEC. 114B-1
LOADING HL-93
STRUCTURE NO. 039-0074

NAME PLATE

See Std. 515001

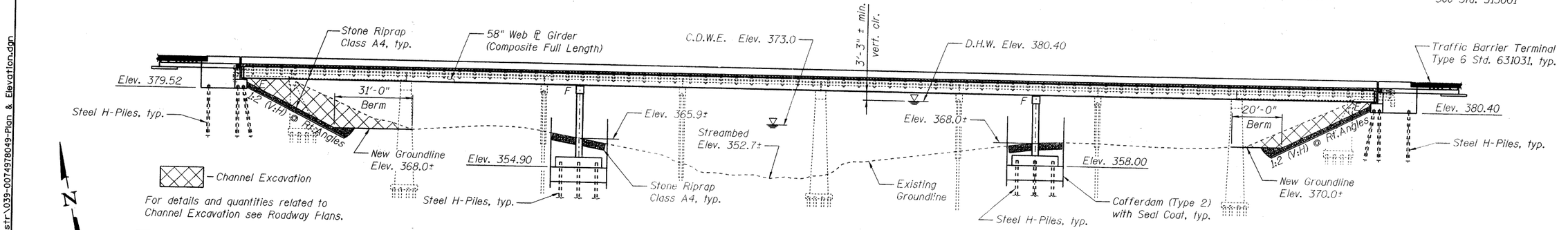

ELEVATION

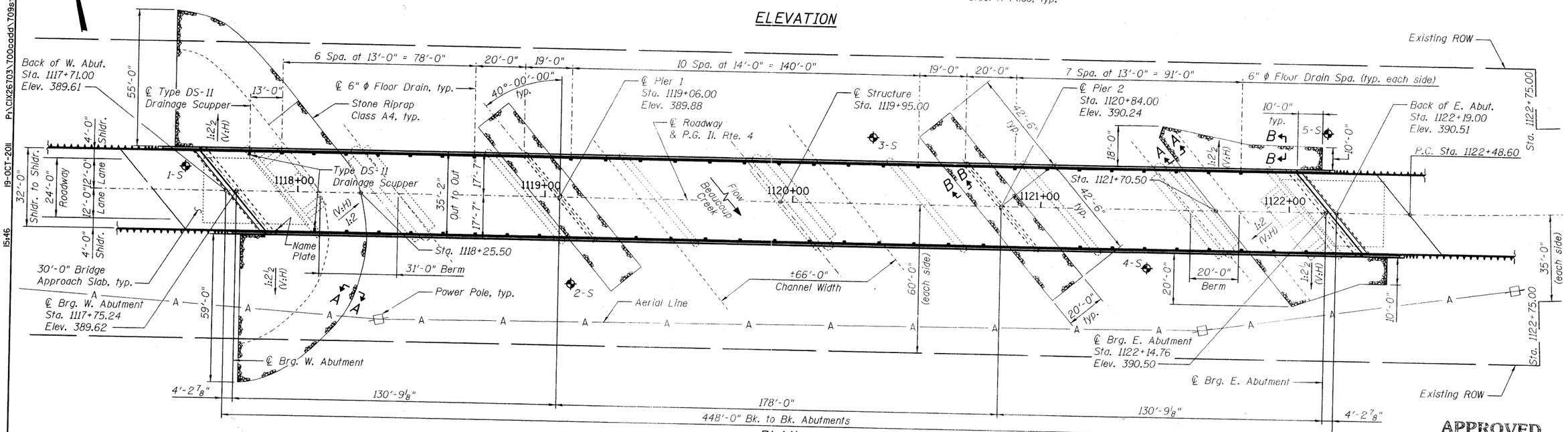

PLAN

WATERWAY INFORMATION

Drainage Area = 517 Sq Mi

Ex. Low Grade Elev. 384.07 @ Sta. 1105+50
Pr. Low Grade Elev. 384.07 @ Sta. 1105+50

Flood	Freq. Yr.	Q C.F.S.	Opening Sq. Ft. Exist.	Opening Sq. Ft. Prop.	Nat. H.W.E.	Head - Ft. Exist.	Head - Ft. Prop.	Headwater El. Exist.	Headwater El. Prop.
	10	14900	3410.0	3937.0	377.5	0.8	0.8	378.3	378.3
Design	50	22100	4192.0	4843.0	380.4	1.0	0.9	381.4	381.3
Base	100	25100	4642.0	5357.0	382.0	0.9	0.9	382.9	382.9
Overtopping		31880	5075.0	5847.0	383.5	1.3	0.9	384.8	384.4

10 Year Velocity through Existing Bridge = 4.37 fps.
10 Year Velocity through Proposed Bridge = 3.8 fps.

DESIGN SPECIFICATIONS

2010 AASHTO LRFD Bridge Design Specifications,
Customary U.S. Units, 5th Edition

SEISMIC DATA

Seismic Performance Zone (SPZ) = 3
Design Spectral Acc. at 1.0 sec (S_{D1}) = 0.334g
Design Spectral Acc. at 0.2 sec (S_{DS}) = 0.780g
Soil Site Class D

LOADING HL 93

Allow 50#/sq. ft. for future wearing surface.

DESIGN STRESSES

f'c = 3,500 psi
fy = 60,000 psi (Reinforcement)
fy = 50,000 psi (M270 Grade 50) (Pile)
fy = 50,000 psi (M270 Grade 50W) (Girders)

Note: See Sheet No. 2 of 35 for Curve Data and Profile Grade Along ℄ Roadway.

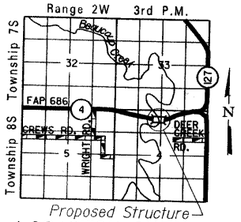

LOCATION SKETCH

STATE OF ILLINOIS
BENJAMIN J. ERSCHEN
081-007057
ST. LOUIS, MO
LICENSED STRUCTURAL ENGINEER

BENJAMIN J. ERSCHEN
ST. LOUIS, MISSOURI
ILLINOIS LICENSED STRUCTURAL
ENGINEER NO. 081-007057
EXPIRES NOV. 30, 2012

APPROVED
FOR STRUCTURAL ADEQUACY ONLY
ENGINEER OF BRIDGES AND STRUCTURES

GENERAL PLAN AND ELEVATION
IL ROUTE 4 OVER BEAUCOUP CREEK
FAP ROUTE 686 - SECTION 114B-1
JACKSON COUNTY
STATION 1119+95.00
STRUCTURE NO. 039-0074

JACOBS

USER NAME =	DESIGNED - B. ERSCHEN	REVISED -	
	CHECKED - R. NIEMIETZ	REVISED -	
PLOT DATE = 19-OCT-2011	DRAWN - C. SALLADE	REVISED -	
	CHECKED - B. ERSCHEN	REVISED -	

FILE NAME=039-0074978049-Plan & Elevation.dgn

STATE OF ILLINOIS
DEPARTMENT OF TRANSPORTATION

GENERAL PLAN & ELEVATION
STRUCTURE NO. 039-0074

SHEET NO. 1 OF 35 SHEETS

F.A.P. RTE.	SECTION	COUNTY	TOTAL SHEETS	SHEET NO.
686	114B-1	JACKSON	80	114
		CONTRACT NO. 78049		
		ILLINOIS FED. AID PROJECT		

P:\CIX26703\T00cadd\T09str\039-0074978049-Plan & Elevation.dgn 19-OCT-2011 15:46

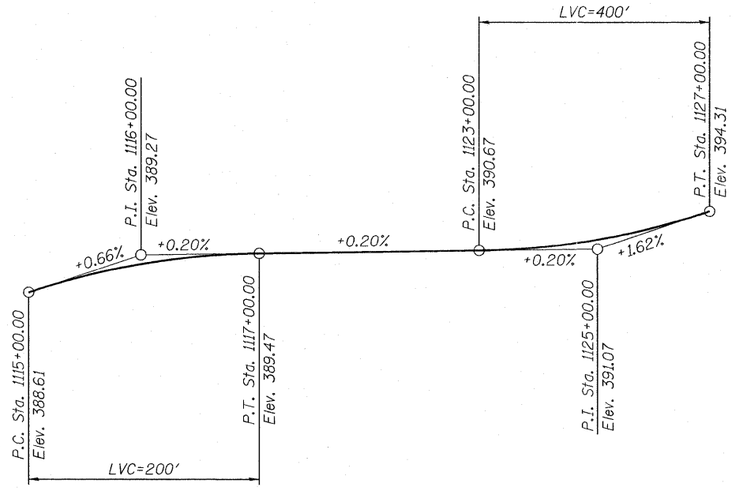

PROFILE GRADE

(Along ℄ Roadway)

CURVE DATA

(Il. Rte. 4)

D= 3°-42'-32" S.E.= 7.3%
R= 1544.83' P.C. Sta.= 1122+48.60
L= 878.40' P.T. Sta.= 1131+27.00
T= 451.43'
E= 64.41'

Note: Transition from normal crown to full superelevation is attained linearly from Sta. 1122+34.00 to Sta. 1124+38.00.

GENERAL NOTES

* Fasteners shall be AASHTO M164 Type 1, mechanically galvanized bolts in painted areas and M164 Type 3 in unpainted areas. Bolts 7/8 in. ϕ, holes 15/16 in. ϕ unless otherwise noted.

* Calculated weight of Structural Steel = 636,850 lbs.

* All structural steel shall be AASHTO M270 Grade 50W except expansion joints which shall be AASHTO M270 Grade 50. All structural steel shall be cleaned as specified in the Special Provision for "Surface Prepatation and Painting Requirements for Weathering Steel".

No field welding is permitted except as specified in the contract documents.

Reinforcement bars shall conform to the requirements of ASTM A 706 Gr 60. See Special Provisions.

Reinforcement bars designated (E) shall be epoxy coated.

If the Contractor elects to use cantilever forming brackets on the exterior girders, the brackets shall be placed at the same locations as required for the hardwood blocks in Article 503.06(b) of the Standard Specification. If additional cantilever forming brackets are required, hardwood blocking shall be wedged between the exterior and first interior girder at each of these additional bracket locations.

Bearing seat surfaces shall be constructed or adjusted to their designated elevations within a tolerance of 1/8 inch (0.01 ft). Adjustment shall be made either by grinding the surface or by shimming the bearings.

Concrete Sealer shall be applied to the designated areas of the East and West Abutments.

* All structural steel and exposed surfaces of bearings within a distance of 10 ft. each way from the deck joints shall be painted as specified in the Special Provision for "Surface Preparation and Painting Requirements for Weathering Steel".

Layout of slope protection system may be varied in the field to suit ground conditions as directed by the Engineer.

Seal coat thickness design is based on the Cofferdam Design Water Elevation (CDWE). Cofferdam design details and proposed changes in seal coat thickness shall be submitted to the Engineer for approval with the cofferdam design.

Slipforming of parapets is not allowed.

Dynamic Pile Monitoring will be required for all test piles. See Special Provisions.

TOTAL BILL OF MATERIAL

ITEM	UNIT	SUPER	SUB	TOTAL
Stone Riprap, Class A4	Sq. Yd.		1584	1584
Filter Fabric	Sq. Yd.		1584	1584
Removal of Existing Structures	Each			1
Structure Excavation	Cu. Yd.		372	372
Cofferdam Excavation	Cu. Yd.		1386	1386
Cofferdam (Type 2) (Location - 1)	Each		1	1
Cofferdam (Type 2) (Location - 2)	Each		1	1
Floor Drains	Each	52		52
Concrete Structures	Cu. Yd.		634.1	634.1
Concrete Superstructure	Cu. Yd.	617.3		617.3
Bridge Deck Grooving	Sq. Yd.	1688		1688
Seal Coat Concrete	Cu. Yd.		462.0	462.0
Concrete Encasement	Cu. Yd.		12.0	12.0
Protective Coat	Sq. Yd.	2200		2200
Erecting Structural Steel	L. Sum	1		1
Stud Shear Connectors	Each	4104		4104
Reinforcement Bars, Epoxy Coated	Pound	153,240	138,530	291,770
Bar Splicers	Each		84	84
Furnishing Steel Piles HP14x73	Foot		2590	2590
Driving Piles	Foot		2590	2590
Test Pile Steel HP14x73	Each		4	4
Pile Shoes	Each		46	46
Name Plates	Each	1		1
Preformed Joint Strip Seal	Foot	87.5		87.5
Erecting Elastomeric Bearing Assembly, Type II	Each	12		12
Anchor Bolts, 3/4"	Each	24		24
Anchor Bolts, 1 1/4"	Each	24		24
Concrete Sealer	Sq. Ft.		1280	1280
Geocomposite Wall Drain	Sq. Yd.		78	78
Porous Granular Embankment, Special	Cu. Yd.		174	174
Asbestos Bearing Pad Removal	Each	132		132
Drainage Scuppers, DS-11	Each	2		2
Pipe Underdrains for Structures 4"	Foot		107	107

INDEX OF SHEETS

1 General Plan and Elevation
2 General Structure Data
3 Foundation Layout
4-7 Top of Slab Elevations
8 Top of W. Approach Slab Elevations
9 Top of E. Approach Slab Elevations
10 Superstructure Plan and Section
11 Superstructure Details
12-13 Bridge Approach Slab Details
14 Slab Pouring Sequence
15 Drainage Scupper, DS-11
16 Preformed Joint Strip Seal
17 Framing Plan and Design Data
18-20 Girder and Cross Frame Details
21 Bearing Details
22-23 West Abutment Details
24-25 East Abutment Details
26 Pier 1 Plan and Elevation
27 Pier 2 Plan and Elevation
28 Pier Details
29 Bar Splicer Assembly and Mechanical Splice Details
30 HP Pile Details
31-35 Boring Logs

* FOR INFORMATION ONLY

Structural steel and bearings were furnished in Contract 78283.

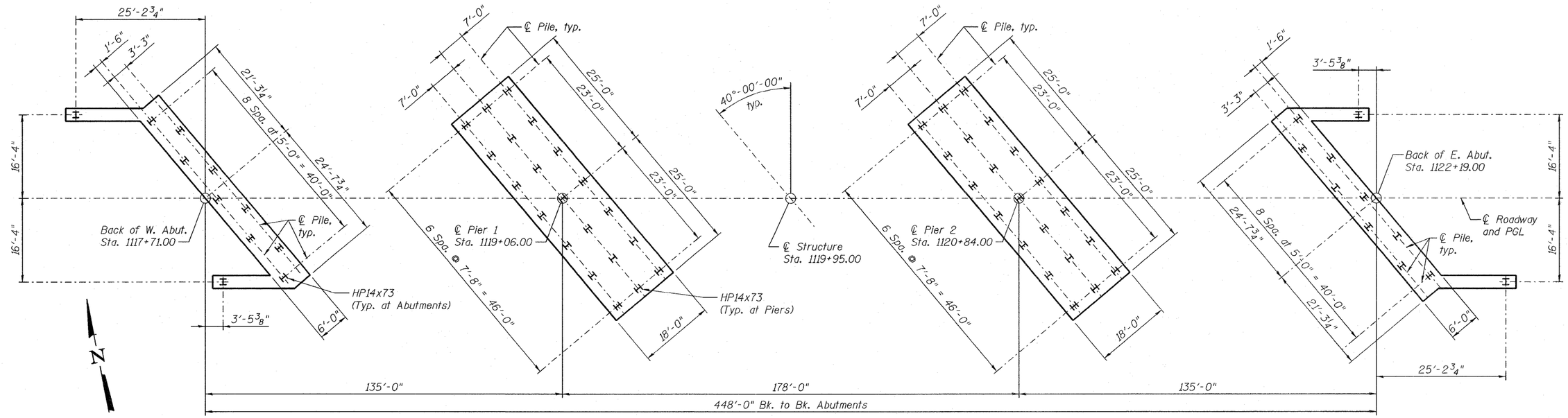

FOUNDATION LAYOUT

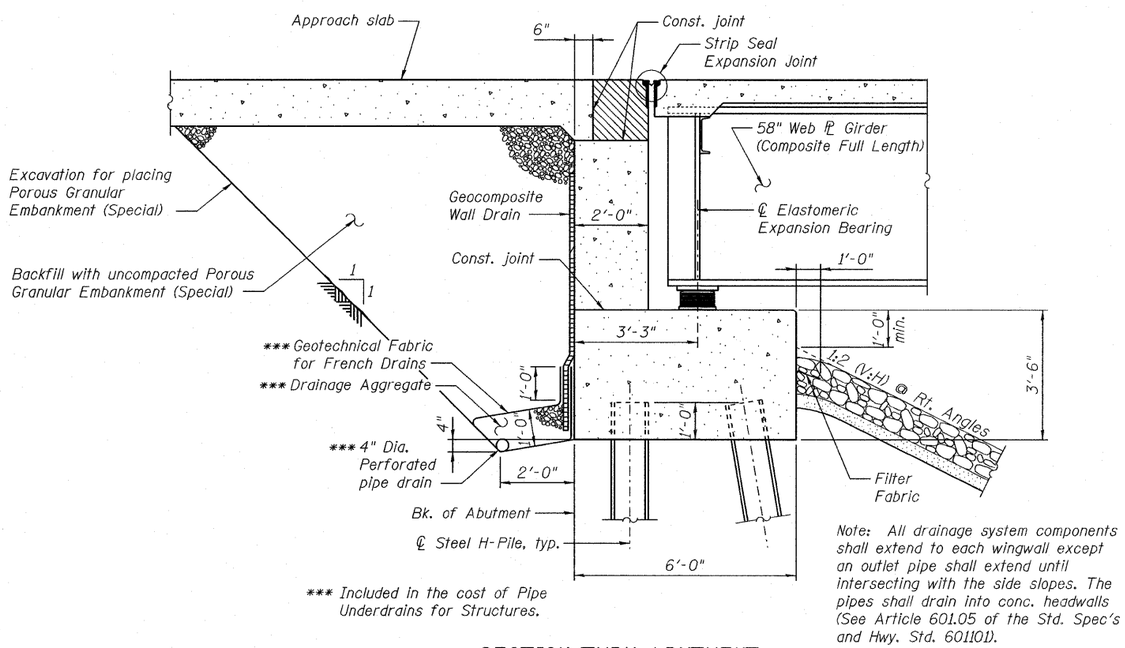

*** Included in the cost of Pipe Underdrains for Structures.

Note: All drainage system components shall extend to each wingwall except an outlet pipe shall extend until intersecting with the side slopes. The pipes shall drain into conc. headwalls (See Article 601.05 of the Std. Spec's and Hwy. Std. 601101).

SECTION THRU ABUTMENT

(Horiz. dim. @ Rt. L's)

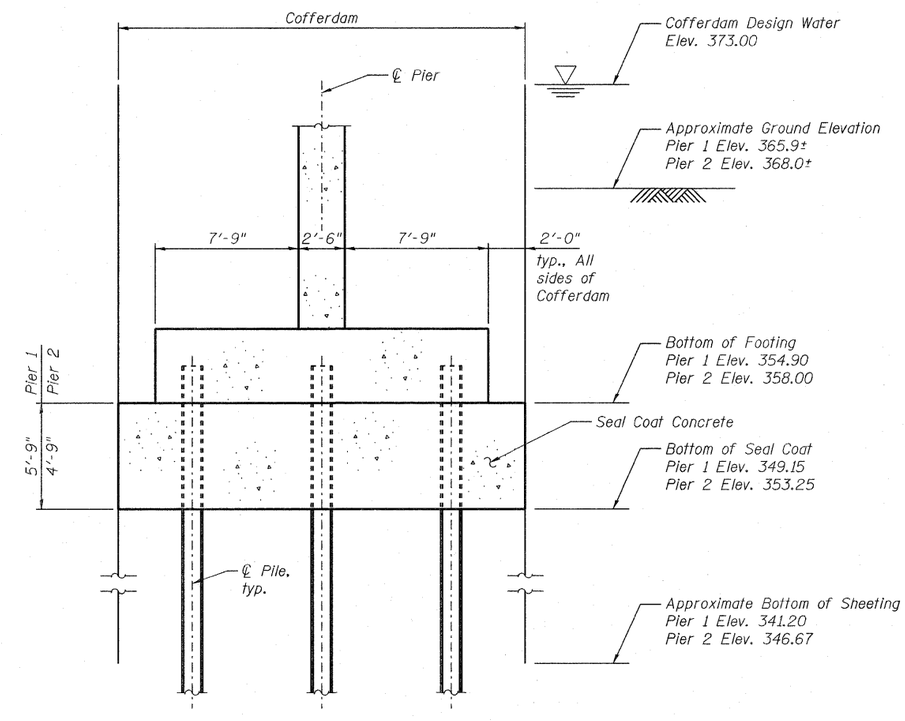

SECTION THRU COFFERDAM

JACOBS	USER NAME =	DESIGNED - B. ERSCHEN	REVISED -	STATE OF ILLINOIS DEPARTMENT OF TRANSPORTATION	FOUNDATION LAYOUT STRUCTURE NO. 039-0074	F.A.P. RTE.	SECTION	COUNTY	TOTAL SHEETS / SHEET NO.
		CHECKED - N. KHATRI	REVISED -			686	114B-1	JACKSON	82 / 114
	PLOT DATE = 19-OCT-2011	DRAWN - C. SALLADE	REVISED -					CONTRACT NO. 78049	
FILE NAME=039-0074978049-Foundation Plan.dgn		CHECKED - J. SMITH	REVISED -		SHEET NO. 3 OF 35 SHEETS			ILLINOIS FED. AID PROJECT	

15:46 19-OCT-2011 P:\CIX26703\700cadd\709str\039-0074978049-Foundation Plan.dgn

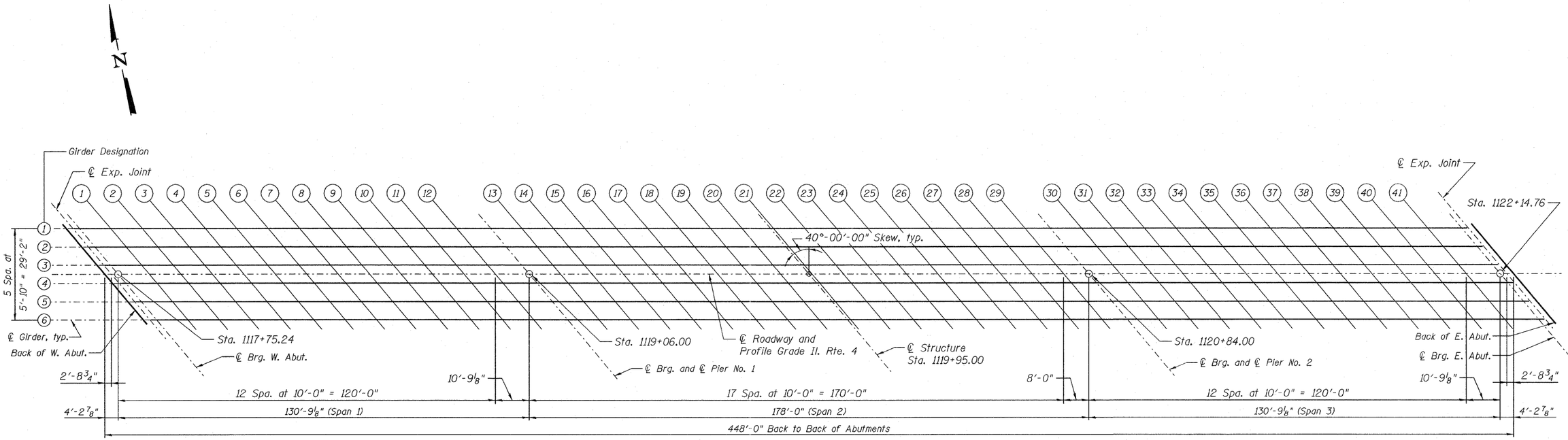

PLAN

15:47 19-OCT-2011 P:\CIX26703\700cadd\709str\039-0074978049-TOS-01.dgn

JACOBS	USER NAME =	DESIGNED - B. ERSCHEN	REVISED -	STATE OF ILLINOIS DEPARTMENT OF TRANSPORTATION	TOP OF SLAB ELEVATIONS STRUCTURE NO. 039-0074	F.A.P. RTE.	SECTION	COUNTY	TOTAL SHEETS	SHEET NO.
		CHECKED - M. CRONIN	REVISED -			686	114B-1	JACKSON	83	114
	PLOT DATE = 19-OCT-2011	DRAWN - C. SALLADE	REVISED -					CONTRACT NO. 78049		
FILE NAME=039-0074978049-TOS-01.dgn		CHECKED - F. CAMBA	REVISED -		SHEET NO. 4 OF 35 SHEETS		ILLINOIS	FED. AID PROJECT		

GIRDER 1

Location	Station	Offset	Theoretical Grade Elevations	Theoretical Grade Elevations Adjusted For Dead Load Deflection
Bk. W. Abut.	1117+58.76	-14.58	389.35	-
℄ W. Exp. Jt.	1117+61.49	-14.58	389.35	-
℄ Brg. W. Abut.	1117+63.01	-14.58	389.35	389.35
1	1117+73.01	-14.58	389.37	389.42
2	1117+83.01	-14.58	389.39	389.48
3	1117+93.01	-14.58	389.41	389.54
4	1118+03.01	-14.58	389.43	389.58
5	1118+13.01	-14.58	389.45	389.60
6	1118+23.01	-14.58	389.47	389.62
7	1118+33.01	-14.58	389.49	389.62
8	1118+43.01	-14.58	389.51	389.61
9	1118+53.01	-14.58	389.53	389.60
10	1118+63.01	-14.58	389.55	389.60
11	1118+73.01	-14.58	389.57	389.59
12	1118+83.01	-14.58	389.59	389.60
℄ Brg. Pier 1	1118+93.76	-14.58	389.62	389.62
13	1119+03.76	-14.58	389.64	389.66
14	1119+13.76	-14.58	389.66	389.70
15	1119+23.76	-14.58	389.68	389.76
16	1119+33.76	-14.58	389.70	389.82
17	1119+43.76	-14.58	389.72	389.88
18	1119+53.76	-14.58	389.74	389.94
19	1119+63.76	-14.58	389.76	389.99
20	1119+73.76	-14.58	389.78	390.03
21	1119+83.76	-14.58	389.80	390.06
22	1119+93.76	-14.58	389.82	390.06
23	1120+03.76	-14.58	389.84	390.07
24	1120+13.76	-14.58	389.86	390.05
25	1120+23.76	-14.58	389.88	390.03
26	1120+33.76	-14.58	389.90	390.01
27	1120+43.76	-14.58	389.92	389.99
28	1120+53.76	-14.58	389.94	389.97
29	1120+63.76	-14.58	389.96	389.97
℄ Brg. Pier 2	1120+71.76	-14.58	389.97	389.97
30	1120+81.76	-14.58	389.99	390.00
31	1120+91.76	-14.58	390.01	390.03
32	1121+01.76	-14.58	390.03	390.07
33	1121+11.76	-14.58	390.05	390.12
34	1121+21.76	-14.58	390.07	390.17
35	1121+31.76	-14.58	390.09	390.21
36	1121+41.76	-14.58	390.11	390.25
37	1121+51.76	-14.58	390.13	390.28
38	1121+61.76	-14.58	390.15	390.30
39	1121+71.76	-14.58	390.17	390.30
40	1121+81.76	-14.58	390.19	390.28
41	1121+91.76	-14.58	390.21	390.26
℄ Brg. E. Abut.	1122+02.52	-14.58	390.23	390.23
℄ E. Exp. Jt.	1122+04.04	-14.58	390.24	-
Bk. E. Abut.	1122+06.76	-14.58	390.24	-

GIRDER 2

Location	Station	Offset	Theoretical Grade Elevations	Theoretical Grade Elevations Adjusted For Dead Load Deflection
Bk. W. Abut.	1117+63.66	-8.75	389.46	-
℄ W. Exp. Jt.	1117+66.38	-8.75	389.47	-
℄ Brg. W. Abut.	1117+67.90	-8.75	389.47	389.47
1	1117+77.90	-8.75	389.49	389.53
2	1117+87.90	-8.75	389.51	389.59
3	1117+97.90	-8.75	389.53	389.64
4	1118+07.90	-8.75	389.55	389.68
5	1118+17.90	-8.75	389.57	389.71
6	1118+27.90	-8.75	389.59	389.72
7	1118+37.90	-8.75	389.61	389.72
8	1118+47.90	-8.75	389.63	389.72
9	1118+57.90	-8.75	389.65	389.71
10	1118+67.90	-8.75	389.67	389.71
11	1118+77.90	-8.75	389.69	389.71
12	1118+87.90	-8.75	389.71	389.71
℄ Brg. Pier 1	1118+98.66	-8.75	389.73	389.73
13	1119+08.66	-8.75	389.75	389.77
14	1119+18.66	-8.75	389.77	389.81
15	1119+28.66	-8.75	389.79	389.87
16	1119+38.66	-8.75	389.81	389.93
17	1119+48.66	-8.75	389.83	389.99
18	1119+58.66	-8.75	389.85	390.04
19	1119+68.66	-8.75	389.87	390.09
20	1119+78.66	-8.75	389.89	390.12
21	1119+88.66	-8.75	389.91	390.15
22	1119+98.66	-8.75	389.93	390.16
23	1120+08.66	-8.75	389.95	390.16
24	1120+18.66	-8.75	389.97	390.15
25	1120+28.66	-8.75	389.99	390.14
26	1120+38.66	-8.75	390.01	390.12
27	1120+48.66	-8.75	390.03	390.10
28	1120+58.66	-8.75	390.05	390.09
29	1120+68.66	-8.75	390.07	390.09
℄ Brg. Pier 2	1120+76.66	-8.75	390.09	390.09
30	1120+86.66	-8.75	390.11	390.11
31	1120+96.66	-8.75	390.13	390.14
32	1121+06.66	-8.75	390.15	390.18
33	1121+16.66	-8.75	390.17	390.23
34	1121+26.66	-8.75	390.19	390.28
35	1121+36.66	-8.75	390.21	390.32
36	1121+46.66	-8.75	390.23	390.36
37	1121+56.66	-8.75	390.25	390.39
38	1121+66.66	-8.75	390.27	390.40
39	1121+76.66	-8.75	390.29	390.40
40	1121+86.66	-8.75	390.31	390.39
41	1121+96.66	-8.75	390.33	390.37
℄ Brg. E. Abut.	1122+07.42	-8.75	390.35	390.35
℄ E. Exp. Jt.	1122+08.93	-8.75	390.35	-
Bk. E. Abut.	1122+11.66	-8.75	390.36	-

GIRDER 3

Location	Station	Offset	Theoretical Grade Elevations	Theoretical Grade Elevations Adjusted For Dead Load Deflection
Bk. W. Abut.	1117+68.55	-2.92	389.56	-
℄ W. Exp. Jt.	1117+71.28	-2.92	389.57	-
℄ Brg. W. Abut.	1117+72.80	-2.92	389.57	389.57
1	1117+82.80	-2.92	389.59	389.63
2	1117+92.80	-2.92	389.61	389.69
3	1118+02.80	-2.92	389.63	389.74
4	1118+12.80	-2.92	389.65	389.78
5	1118+22.80	-2.92	389.67	389.81
6	1118+32.80	-2.92	389.69	389.82
7	1118+42.80	-2.92	389.71	389.83
8	1118+52.80	-2.92	389.73	389.82
9	1118+62.80	-2.92	389.75	389.81
10	1118+72.80	-2.92	389.77	389.81
11	1118+82.80	-2.92	389.79	389.81
12	1118+92.80	-2.92	389.81	389.81
℄ Brg. Pier 1	1119+03.55	-2.92	389.83	389.83
13	1119+13.55	-2.92	389.85	389.87
14	1119+23.55	-2.92	389.87	389.91
15	1119+33.55	-2.92	389.89	389.97
16	1119+43.55	-2.92	389.91	390.03
17	1119+53.55	-2.92	389.93	390.09
18	1119+63.55	-2.92	389.95	390.14
19	1119+73.55	-2.92	389.97	390.19
20	1119+83.55	-2.92	389.99	390.23
21	1119+93.55	-2.92	390.01	390.26
22	1120+03.55	-2.92	390.03	390.26
23	1120+13.55	-2.92	390.05	390.27
24	1120+23.55	-2.92	390.07	390.25
25	1120+33.55	-2.92	390.09	390.24
26	1120+43.55	-2.92	390.11	390.22
27	1120+53.55	-2.92	390.13	390.20
28	1120+63.55	-2.92	390.15	390.19
29	1120+73.55	-2.92	390.17	390.19
℄ Brg. Pier 2	1120+81.55	-2.92	390.19	390.19
30	1120+91.55	-2.92	390.21	390.21
31	1121+01.55	-2.92	390.23	390.24
32	1121+11.55	-2.92	390.25	390.28
33	1121+21.55	-2.92	390.27	390.33
34	1121+31.55	-2.92	390.29	390.38
35	1121+41.55	-2.92	390.31	390.42
36	1121+51.55	-2.92	390.33	390.46
37	1121+61.55	-2.92	390.35	390.49
38	1121+71.55	-2.92	390.37	390.50
39	1121+81.55	-2.92	390.39	390.50
40	1121+91.55	-2.92	390.41	390.49
41	1122+01.55	-2.92	390.43	390.48
℄ Brg. E. Abut.	1122+12.31	-2.92	390.45	390.45
℄ E. Exp. Jt.	1122+13.83	-2.92	390.45	-
Bk. E. Abut.	1122+16.55	-2.92	390.46	-

℄ ROADWAY AND PROFILE GRADE

Location	Station	Offset	Theoretical Grade Elevations	Theoretical Grade Elevations Adjusted For Dead Load Deflection
Bk. W. Abut.	1117+71.00	0.00	389.61	-
℄ W. Exp. Jt.	1117+73.73	0.00	389.62	-
℄ Brg. W. Abut.	1117+75.24	0.00	389.62	389.62
1	1117+85.24	0.00	389.64	389.68
2	1117+95.24	0.00	389.66	389.74
3	1118+05.24	0.00	389.68	389.79
4	1118+15.24	0.00	389.70	389.83
5	1118+25.24	0.00	389.72	389.86
6	1118+35.24	0.00	389.74	389.87
7	1118+45.24	0.00	389.76	389.88
8	1118+55.24	0.00	389.78	389.87
9	1118+65.24	0.00	389.80	389.87
10	1118+75.24	0.00	389.82	389.86
11	1118+85.24	0.00	389.84	389.86
12	1118+95.24	0.00	389.86	389.86
℄ Brg. Pier 1	1119+06.00	0.00	389.88	389.88
13	1119+16.00	0.00	389.90	389.92
14	1119+26.00	0.00	389.92	389.96
15	1119+36.00	0.00	389.94	390.02
16	1119+46.00	0.00	389.96	390.08
17	1119+56.00	0.00	389.98	390.14
18	1119+66.00	0.00	390.00	390.19
19	1119+76.00	0.00	390.02	390.24
20	1119+86.00	0.00	390.04	390.28
21	1119+96.00	0.00	390.06	390.31
22	1120+06.00	0.00	390.08	390.31
23	1120+16.00	0.00	390.10	390.32
24	1120+26.00	0.00	390.12	390.30
25	1120+36.00	0.00	390.14	390.29
26	1120+46.00	0.00	390.16	390.27
27	1120+56.00	0.00	390.18	390.25
28	1120+66.00	0.00	390.20	390.24
29	1120+76.00	0.00	390.22	390.24
℄ Brg. Pier 2	1120+84.00	0.00	390.24	390.24
30	1120+94.00	0.00	390.26	390.26
31	1121+04.00	0.00	390.28	390.29
32	1121+14.00	0.00	390.30	390.34
33	1121+24.00	0.00	390.32	390.38
34	1121+34.00	0.00	390.34	390.43
35	1121+44.00	0.00	390.36	390.47
36	1121+54.00	0.00	390.38	390.51
37	1121+64.00	0.00	390.40	390.54
38	1121+74.00	0.00	390.42	390.55
39	1121+84.00	0.00	390.44	390.55
40	1121+94.00	0.00	390.46	390.54
41	1122+04.00	0.00	390.48	390.53
℄ Brg. E. Abut.	1122+14.76	0.00	390.50	390.50
℄ E. Exp. Jt.	1122+16.27	0.00	390.50	-
Bk. E. Abut.	1122+19.00	0.00	390.51	-

GIRDER 4

Location	Station	Offset	Theoretical Grade Elevations	Theoretical Grade Elevations Adjusted For Dead Load Deflection
Bk. W. Abut.	1117+73.45	2.92	389.57	-
℄ W. Exp. Jt.	1117+76.17	2.92	389.58	-
℄ Brg. W. Abut.	1117+77.69	2.92	389.58	389.58
1	1117+87.69	2.92	389.60	389.64
2	1117+97.69	2.92	389.62	389.70
3	1118+07.69	2.92	389.64	389.75
4	1118+17.69	2.92	389.66	389.79
5	1118+27.69	2.92	389.68	389.82
6	1118+37.69	2.92	389.70	389.83
7	1118+47.69	2.92	389.72	389.84
8	1118+57.69	2.92	389.74	389.83
9	1118+67.69	2.92	389.76	389.82
10	1118+77.69	2.92	389.78	389.82
11	1118+87.69	2.92	389.80	389.82
12	1118+97.69	2.92	389.82	389.82
℄ Brg. Pier 1	1119+08.45	2.92	389.84	389.84
13	1119+18.45	2.92	389.86	389.88
14	1119+28.45	2.92	389.88	389.92
15	1119+38.45	2.92	389.90	389.98
16	1119+48.45	2.92	389.92	390.04
17	1119+58.45	2.92	389.94	390.10
18	1119+68.45	2.92	389.96	390.15
19	1119+78.45	2.92	389.98	390.20
20	1119+88.45	2.92	390.00	390.24
21	1119+98.45	2.92	390.02	390.27
22	1120+08.45	2.92	390.04	390.27
23	1120+18.45	2.92	390.06	390.28
24	1120+28.45	2.92	390.08	390.26
25	1120+38.45	2.92	390.10	390.25
26	1120+48.45	2.92	390.12	390.23
27	1120+58.45	2.92	390.14	390.21
28	1120+68.45	2.92	390.16	390.20
29	1120+78.45	2.92	390.18	390.20
℄ Brg. Pier 2	1120+86.45	2.92	390.20	390.20
30	1120+96.45	2.92	390.22	390.22
31	1121+06.45	2.92	390.24	390.25
32	1121+16.45	2.92	390.26	390.29
33	1121+26.45	2.92	390.28	390.34
34	1121+36.45	2.92	390.30	390.39
35	1121+46.45	2.92	390.32	390.43
36	1121+56.45	2.92	390.34	390.47
37	1121+66.45	2.92	390.36	390.50
38	1121+76.45	2.92	390.38	390.51
39	1121+86.45	2.92	390.40	390.51
40	1121+96.45	2.92	390.42	390.50
41	1122+06.45	2.92	390.44	390.48
℄ Brg. E. Abut.	1122+17.20	2.92	390.46	390.46
℄ E. Exp. Jt.	1122+18.72	2.92	390.46	-
Bk. E. Abut.	1122+21.45	2.92	390.47	-

GIRDER 5

Location	Station	Offset	Theoretical Grade Elevations	Theoretical Grade Elevations Adjusted For Dead Load Deflection
Bk. W. Abut.	1117+78.34	8.75	389.49	-
℄ W. Exp. Jt.	1117+81.07	8.75	389.50	-
℄ Brg. W. Abut.	1117+82.58	8.75	389.50	389.50
1	1117+92.58	8.75	389.52	389.56
2	1118+02.58	8.75	389.54	389.62
3	1118+12.58	8.75	389.56	389.67
4	1118+22.58	8.75	389.58	389.71
5	1118+32.58	8.75	389.60	389.74
6	1118+42.58	8.75	389.62	389.75
7	1118+52.58	8.75	389.64	389.75
8	1118+62.58	8.75	389.66	389.75
9	1118+72.58	8.75	389.68	389.74
10	1118+82.58	8.75	389.70	389.74
11	1118+92.58	8.75	389.72	389.74
12	1119+02.58	8.75	389.74	389.74
℄ Brg. Pier 1	1119+13.34	8.75	389.76	389.76
13	1119+23.34	8.75	389.78	389.80
14	1119+33.34	8.75	389.80	389.84
15	1119+43.34	8.75	389.82	389.90
16	1119+53.34	8.75	389.84	389.95
17	1119+63.34	8.75	389.86	390.01
18	1119+73.34	8.75	389.88	390.07
19	1119+83.34	8.75	389.90	390.12
20	1119+93.34	8.75	389.92	390.15
21	1120+03.34	8.75	389.94	390.18
22	1120+13.34	8.75	389.96	390.19
23	1120+23.34	8.75	389.98	390.19
24	1120+33.34	8.75	390.00	390.18
25	1120+43.34	8.75	390.02	390.17
26	1120+53.34	8.75	390.04	390.15
27	1120+63.34	8.75	390.06	390.13
28	1120+73.34	8.75	390.08	390.12
29	1120+83.34	8.75	390.10	390.12
℄ Brg. Pier 2	1120+91.34	8.75	390.12	390.12
30	1121+01.34	8.75	390.14	390.14
31	1121+11.34	8.75	390.16	390.17
32	1121+21.34	8.75	390.18	390.21
33	1121+31.34	8.75	390.20	390.26
34	1121+41.34	8.75	390.22	390.31
35	1121+51.34	8.75	390.24	390.35
36	1121+61.34	8.75	390.26	390.39
37	1121+71.34	8.75	390.28	390.41
38	1121+81.34	8.75	390.30	390.43
39	1121+91.34	8.75	390.32	390.43
40	1122+01.34	8.75	390.34	390.42
41	1122+11.34	8.75	390.36	390.40
℄ Brg. E. Abut.	1122+22.10	8.75	390.38	390.38
℄ E. Exp. Jt.	1122+23.62	8.75	390.38	-
Bk. E. Abut.	1122+26.34	8.75	390.39	-

GIRDER 6

Location	Station	Offset	Theoretical Grade Elevations	Theoretical Grade Elevations Adjusted For Dead Load Deflection
Bk. W. Abut.	1117+83.24	14.58	389.40	-
℄ W. Exp. Jt.	1117+85.96	14.58	389.40	-
℄ Brg. W. Abut.	1117+87.48	14.58	389.40	389.40
1	1117+97.48	14.58	389.42	389.47
2	1118+07.48	14.58	389.44	389.53
3	1118+17.48	14.58	389.46	389.58
4	1118+27.48	14.58	389.48	389.63
5	1118+37.48	14.58	389.50	389.65
6	1118+47.48	14.58	389.52	389.66
7	1118+57.48	14.58	389.54	389.67
8	1118+67.48	14.58	389.56	389.66
9	1118+77.48	14.58	389.58	389.65
10	1118+87.48	14.58	389.60	389.65
11	1118+97.48	14.58	389.62	389.64
12	1119+07.48	14.58	389.64	389.65
℄ Brg. Pier 1	1119+18.24	14.58	389.67	389.67
13	1119+28.24	14.58	389.69	389.71
14	1119+38.24	14.58	389.71	389.75
15	1119+48.24	14.58	389.73	389.81
16	1119+58.24	14.58	389.75	389.87
17	1119+68.24	14.58	389.77	389.93
18	1119+78.24	14.58	389.79	389.99
19	1119+88.24	14.58	389.81	390.04
20	1119+98.24	14.58	389.83	390.08
21	1120+08.24	14.58	389.85	390.11
22	1120+18.24	14.58	389.87	390.11
23	1120+28.24	14.58	389.89	390.11
24	1120+38.24	14.58	389.91	390.10
25	1120+48.24	14.58	389.93	390.08
26	1120+58.24	14.58	389.95	390.06
27	1120+68.24	14.58	389.97	390.04
28	1120+78.24	14.58	389.99	390.02
29	1120+88.24	14.58	390.01	390.02
℄ Brg. Pier 2	1120+96.24	14.58	390.02	390.02
30	1121+06.24	14.58	390.04	390.04
31	1121+16.24	14.58	390.06	390.08
32	1121+26.24	14.58	390.08	390.12
33	1121+36.24	14.58	390.10	390.17
34	1121+46.24	14.58	390.12	390.22
35	1121+56.24	14.58	390.14	390.26
36	1121+66.24	14.58	390.16	390.30
37	1121+76.24	14.58	390.18	390.33
38	1121+86.24	14.58	390.20	390.34
39	1121+96.24	14.58	390.22	390.34
40	1122+06.24	14.58	390.24	390.33
41	1122+16.24	14.58	390.26	390.31
℄ Brg. E. Abut.	1122+26.99	14.58	390.28	390.28
℄ E. Exp. Jt.	1122+28.51	14.58	390.29	-
Bk. E. Abut.	1122+31.24	14.58	390.29	-

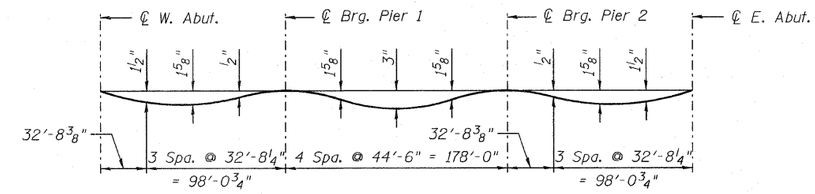

DEAD LOAD DEFLECTION DIAGRAM

(Includes weight of concrete only.)

Note:
The above deflections are not to be used in the field if the engineer is working from the "Theoretical Grade Elevations Adjusted for Dead Load Deflections" as shown on sheets 5, 6 and 7 of 35.

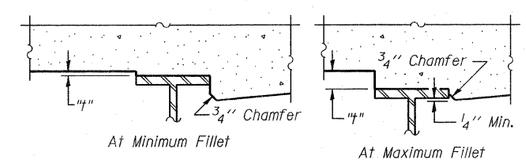

To determine "t": After all structural steel has been erected, elevations of the top flanges of the beams shall be taken at intervals shown on sheet 4 of 35. These elevations subtracted from the "Theoretical Grade Elevations Adjusted for Dead Load Deflection" shown on sheet numbers 5, 6 and 7 of 35, minus slab thickness, equals the fillet heights "t" above top flange of beams.

FILLET HEIGHTS

NORTH EDGE OF SHOULDER

Location	Station	Offset	Theoretical Grade Elevations
W. End of West Appr. Slab	1117+28.23	-16.00	389.26
A1	1117+38.23	-16.00	389.28
A2	1117+48.23	-16.00	389.30
E. End of West Appr. Slab	1117+58.23	-16.00	389.32

NORTH EDGE OF ROADWAY

Location	Station	Offset	Theoretical Grade Elevations
W. End of West Appr. Slab	1117+31.58	-12.00	389.35
A1	1117+41.58	-12.00	389.37
A2	1117+51.58	-12.00	389.39
E. End of West Appr. Slab	1117+61.58	-12.00	389.41

℄ ROADWAY AND PROFILE GRADE

Location	Station	Offset	Theoretical Grade Elevations
W. End of West Appr. Slab	1117+41.65	0.00	389.55
A1	1117+51.65	0.00	389.57
A2	1117+61.65	0.00	389.59
E. End of West Appr. Slab	1117+71.65	0.00	389.61

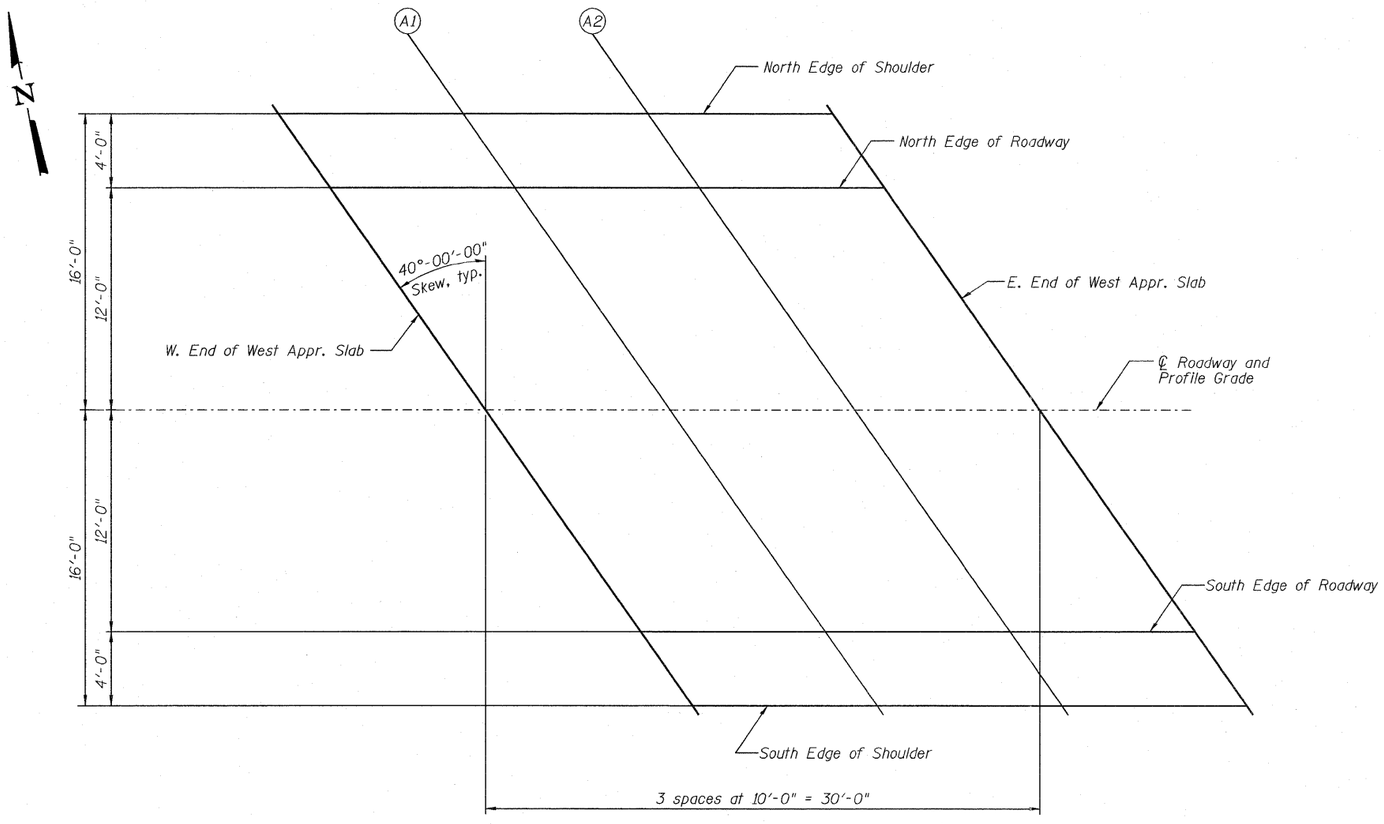

PLAN

SOUTH EDGE OF ROADWAY

Location	Station	Offset	Theoretical Grade Elevations
W. End of West Appr. Slab	1117+51.72	12.00	389.39
A1	1117+61.72	12.00	389.41
A2	1117+71.72	12.00	389.43
E. End of West Appr. Slab	1117+81.72	12.00	389.45

SOUTH EDGE OF SHOULDER

Location	Station	Offset	Theoretical Grade Elevations
W. End of West Appr. Slab	1117+55.08	16.00	389.31
A1	1117+65.08	16.00	389.33
A2	1117+75.08	16.00	389.35
E. End of West Appr. Slab	1117+85.08	16.00	389.37

NORTH EDGE OF SHOULDER

Location	Station	Offset	Theoretical Grade Elevations
W. End of East Appr. Slab	1122+04.92	-16.00	390.21
A3	1122+14.92	-16.00	390.23
A4	1122+24.92	-16.00	390.25
E. End of East Appr. Slab	1122+34.92	-16.00	390.27

NORTH EDGE OF ROADWAY

Location	Station	Offset	Theoretical Grade Elevations
W. End of East Appr. Slab	1122+08.28	-12.00	390.30
A3	1122+18.28	-12.00	390.32
A4	1122+28.28	-12.00	390.34
E. End of East Appr. Slab	1122+38.28	-12.00	390.36

℄ ROADWAY AND PROFILE GRADE

Location	Station	Offset	Theoretical Grade Elevations
W. End of East Appr. Slab	1122+18.35	0.00	390.51
A3	1122+28.35	0.00	390.53
A4	1122+38.35	0.00	390.55
E. End of East Appr. Slab	1122+48.35	0.00	390.57

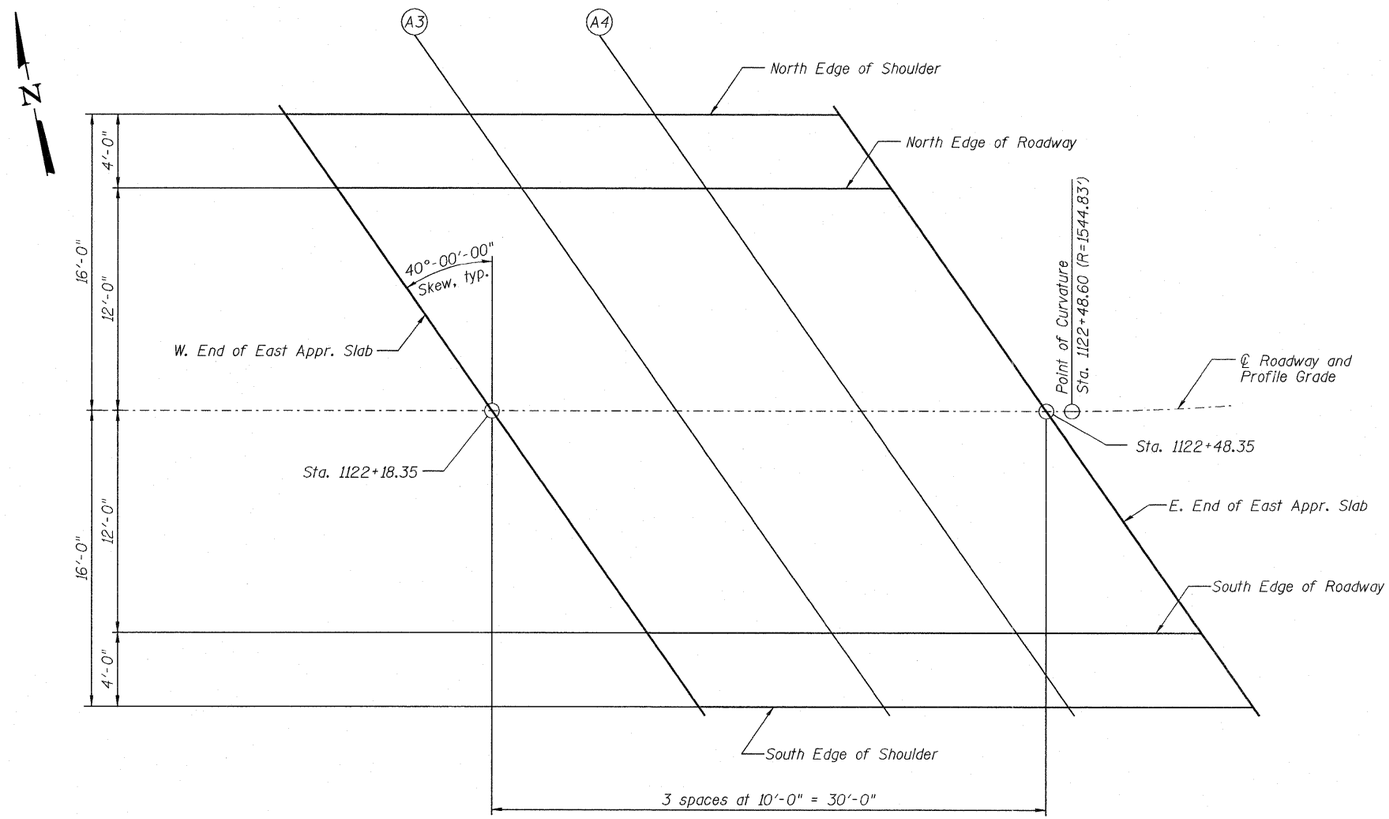

PLAN

SOUTH EDGE OF ROADWAY

Location	Station	Offset	Theoretical Grade Elevations
W. End of East Appr. Slab	1122+28.42	12.00	390.34
A3	1122+38.42	12.00	390.38
A4	1122+48.42	12.00	390.45
E. End of East Appr. Slab	1122+58.32	12.00	390.53

SOUTH EDGE OF SHOULDER

Location	Station	Offset	Theoretical Grade Elevations
W. End of East Appr. Slab	1122.31.77	16.00	390.26
A3	1122+41.77	16.00	390.32
A4	1122+51.74	16.00	390.40
E. End of East Appr. Slab	1122+61.59	16.00	390.47

P:\CIX26703\T00cadd\709str\039-0074978049-Approach Slab Elev2.dgn 19-OCT-2011 15:47

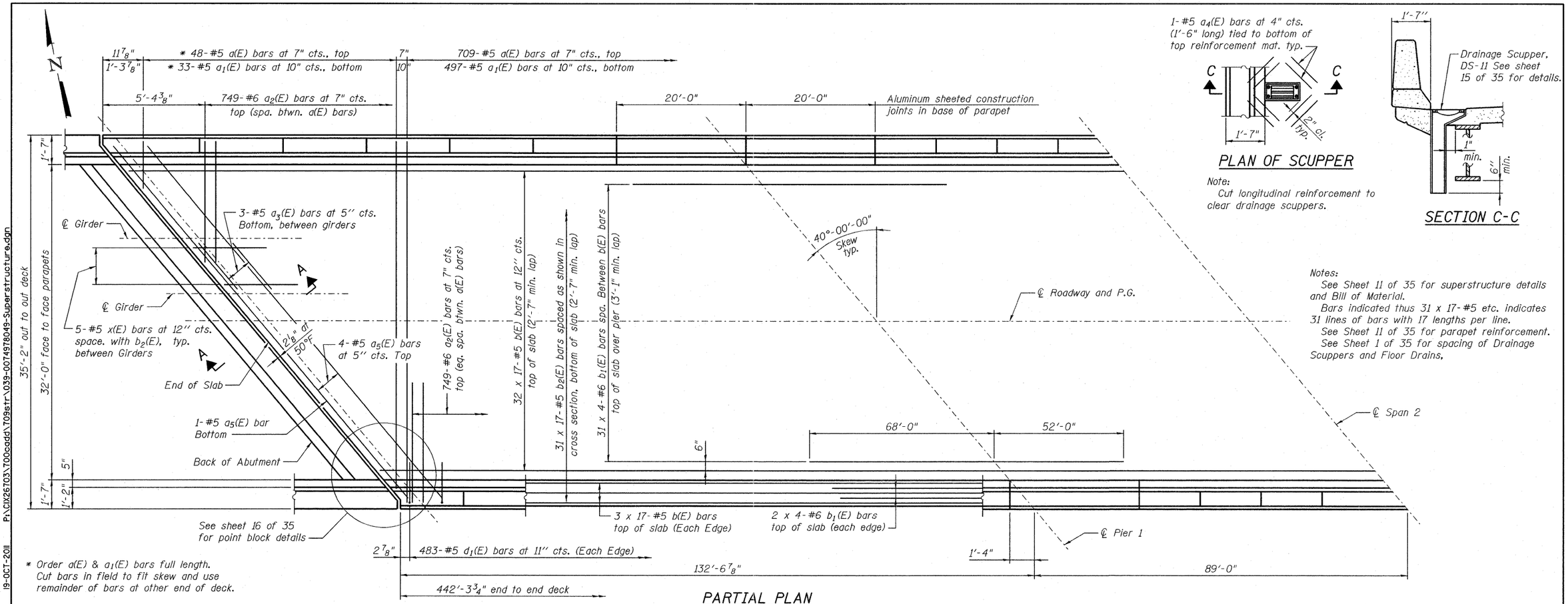

* Order a(E) & a1(E) bars full length. Cut bars in field to fit skew and use remainder of bars at other end of deck.

PLAN OF SCUPPER

Note:
Cut longitudinal reinforcement to clear drainage scuppers.

SECTION C-C

Notes:
See Sheet 11 of 35 for superstructure details and Bill of Material.
Bars indicated thus 31 x 17-#5 etc. indicates 31 lines of bars with 17 lengths per line.
See Sheet 11 of 35 for parapet reinforcement.
See Sheet 1 of 35 for spacing of Drainage Scuppers and Floor Drains.

PARTIAL PLAN

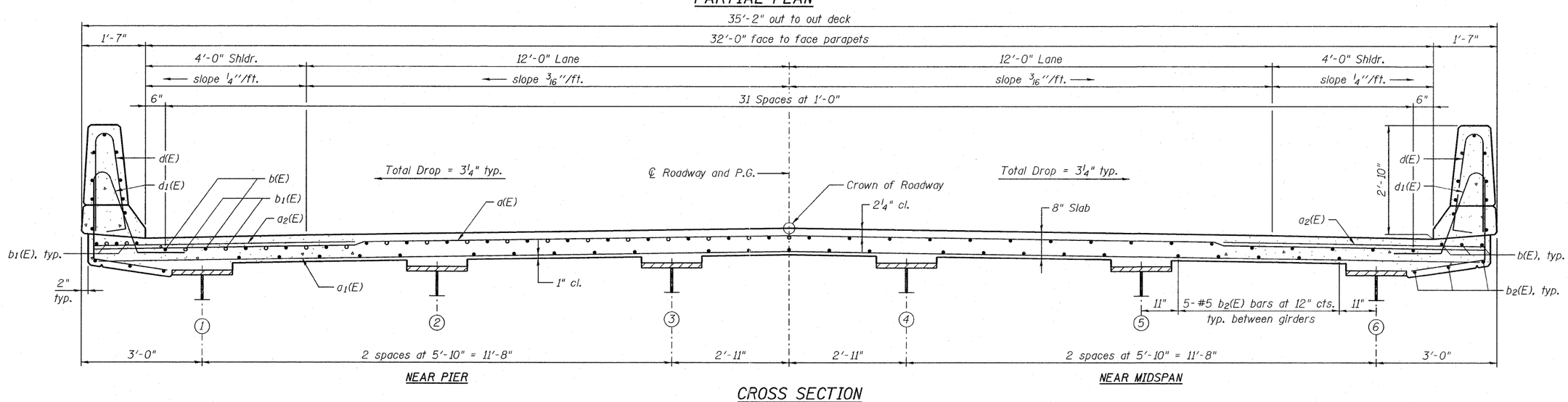

CROSS SECTION
(Looking East/Ahead Station)

JACOBS	USER NAME =	DESIGNED - B. ERSCHEN	REVISED -	STATE OF ILLINOIS DEPARTMENT OF TRANSPORTATION	SUPERSTRUCTURE PLAN AND SECTION STRUCTURE NO. 039-0074	F.A.P. RTE.	SECTION	COUNTY	TOTAL SHEETS	SHEET NO.
		CHECKED - M. CRONIN	REVISED -			686	114B-1	JACKSON	89	114
	PLOT DATE = 19-OCT-2011	DRAWN - C. SALLADE	REVISED -					CONTRACT NO. 78049		
FILE NAME=039-0074978049-Superstructure.dgn		CHECKED - F. CAMBA	REVISED -		SHEET NO. 10 OF 35 SHEETS			ILLINOIS FED. AID PROJECT		

P:\CIX26703\700cadd\709str\039-0074978049-Superstructure.dgn 19-OCT-2011 15:47

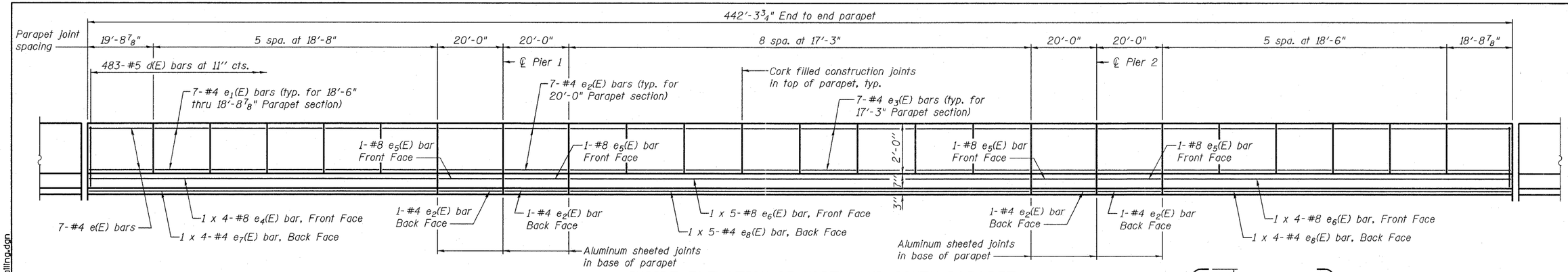

INSIDE ELEVATION OF NORTH AND SOUTH PARAPET

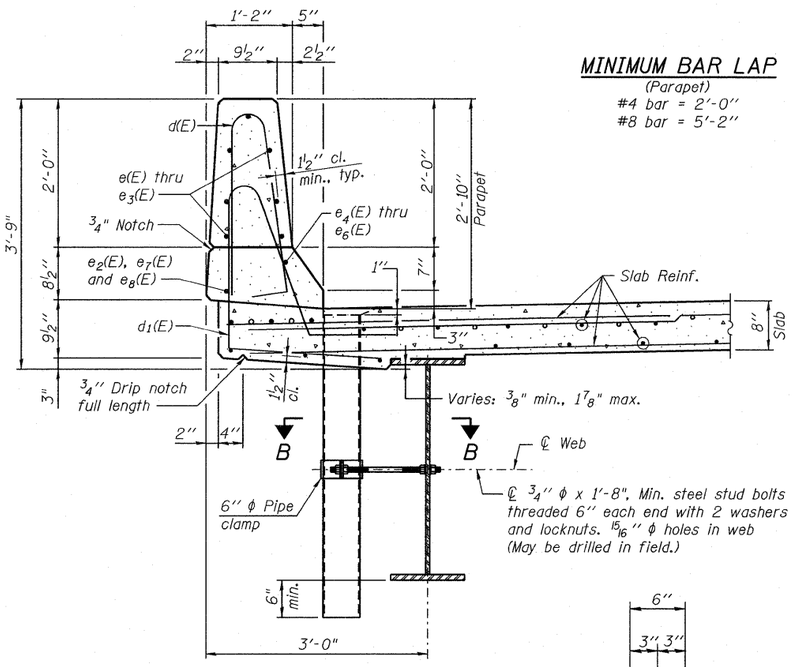

MINIMUM BAR LAP

(Parapet)
#4 bar = 2'-0"
#8 bar = 5'-2"

SECTION THRU PARAPET

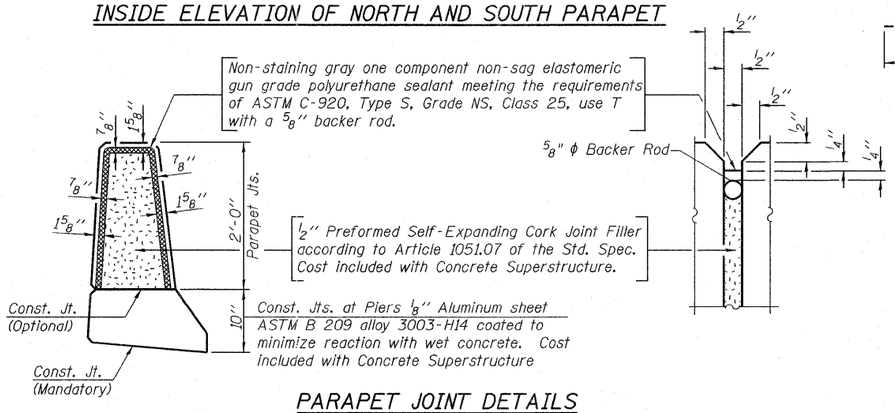

PARAPET JOINT DETAILS

Notes:

Drains shall be located clear of all diaphragms.

The exterior surfaces of the floor drains shall be painted with the finish coat as specified in the special provisions for Cleaning and Painting New Metal Structures. The exterior surfaces of the drains shall be cleaned according to the Society of Protective Coating's Spec. SSPC-SP1 prior to painting.

Fiberglass pipe shall conform to ASTM D 2996, with short-time rupture strength hoop tensile stress of 30,000 p.s.i. minimum.

Galvanize clamping device according to AASHTO M232. Cost of clamping device and inserts is included with Floor Drains.

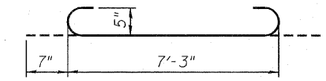

a3(E) BAR

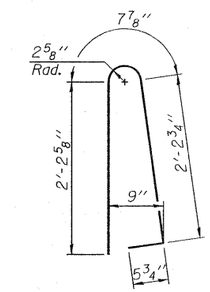

BAR d(E)

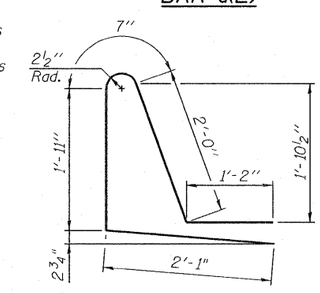

BAR d1(E)

SUPERSTRUCTURE BILL OF MATERIAL

Bar	No.	Size	Length	Shape
d(E) *	757	#5	34'-6"	
d1(E) *	530	#5	33'-10"	
d2(E)	1498	#6	6'-6"	
d3(E)	30	#5	8'-5"	
d4(E)	16	#5	1'-6"	
d5(E)	10	#5	45'-0"	
b(E)	646	#5	28'-6"	
b1(E)	280	#6	32'-6"	
b2(E)	527	#5	28'-6"	
d(E)	966	#5	5'-7"	
d1(E)	966	#5	7'-9"	
e(E)	14	#4	19'-6"	
e1(E)	154	#4	18'-3"	
e2(E)	64	#4	19'-9"	
e3(E)	112	#4	17'-0"	
e4(E)	8	#8	32'-1"	
e5(E)	8	#8	19'-9"	
e6(E)	18	#8	31'-9"	
e7(E)	8	#4	29'-9"	
e8(E)	18	#4	29'-3"	
x(E)	50	#5	6'-8"	
Reinforcement Bars, Epoxy Coated			Pound	130.960
Concrete Superstructure			Cu. Yds.	517.3

Bars indicated thus 1 x 5-#8 etc. indicates 1 line of bars with 5 lengths per line.

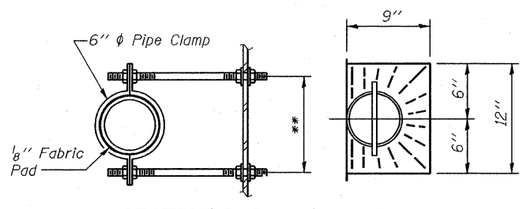

SECTION B-B

**Dimension as required by Pipe Clamp

TOP PLAN

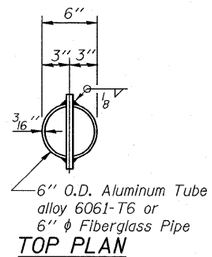

TOP PLAN

(Showing Aluminum Tube)

FLOOR DRAIN DETAILS

(52 Req'd.)

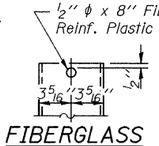

FIBERGLASS PIPE

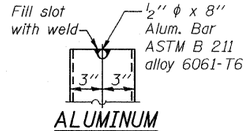

ALUMINUM TUBE

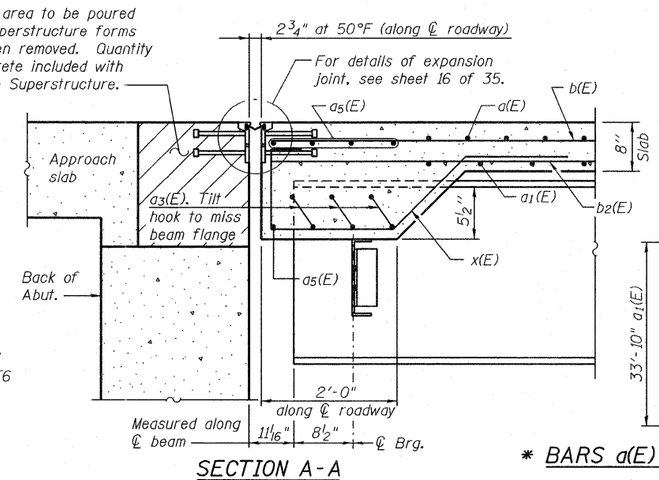

SECTION A-A

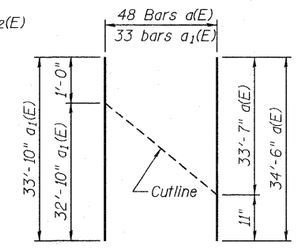

* BARS d(E) AND a1(E) CUTTING DIAGRAM

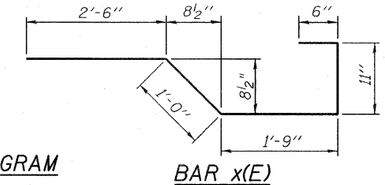

BAR x(E)

JACOBS	USER NAME =	DESIGNED - B. ERSCHEN	REVISED -
		CHECKED - M. CRONIN	REVISED -
	PLOT DATE = 19-OCT-2011	DRAWN - E. KRACK	REVISED -
FILE NAME=039-0074978049-Parapet Railing.dgn		CHECKED - F. CAMBA	REVISED -

STATE OF ILLINOIS
DEPARTMENT OF TRANSPORTATION

SUPERSTRUCTURE DETAILS
STRUCTURE NO. 039-0074
SHEET NO. 11 OF 35 SHEETS

F.A.P. RTE.	SECTION	COUNTY	TOTAL SHEETS	SHEET NO.
686	114B-1	JACKSON	90	114
		CONTRACT NO. 78049		
		ILLINOIS FED. AID PROJECT		

P:\CIX26703\T00cadd\709str\039-0074978049-Parapet Railing.dgn 19-OCT-2011 15:47

Notes:
See sheet 13 of 35 for Sections C-C & D-D and View E-E.
$a(E)$, $a_1(E)$, $a_2(E)$ and $a_3(E)$ bar spacings measured along ℄ Rdwy.

Order $a_2(E)$, $a_3(E)$ and $b_1(E)$ bars full length. Cut in field to fit as needed.

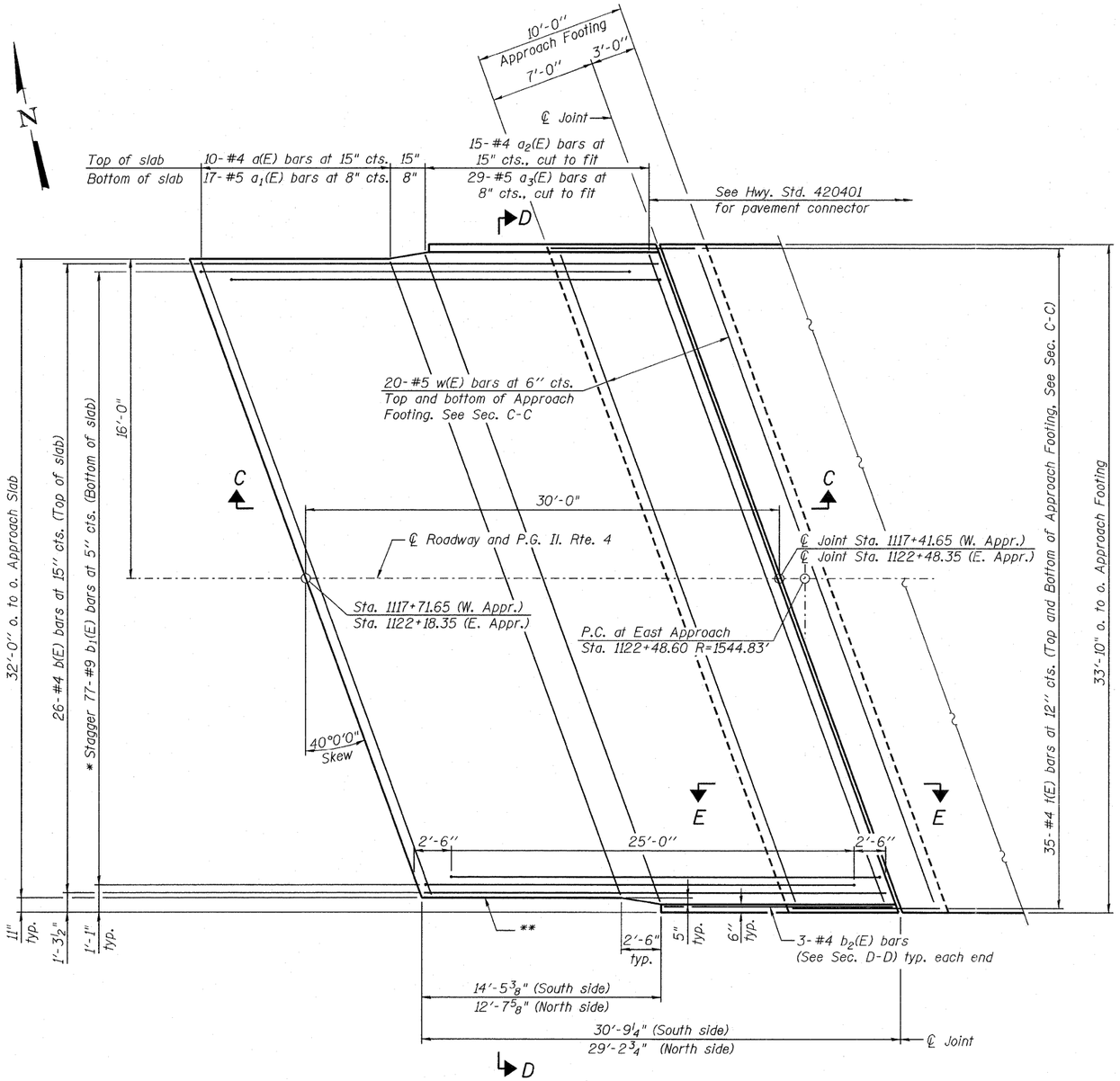

PLAN

(East Approach Slab shown, West Approach similar)

* Tilt #9 b_1(E) bars as required to maintain clearance.
** Closed cell joint filler according to Article 1051.08 of the Std. Specifications; full depth of slab, full length of parapet. Typ. each parapet.

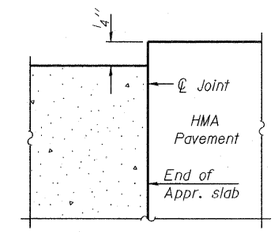

DETAIL A

JACOBS	USER NAME =	DESIGNED -	REVISED -	STATE OF ILLINOIS DEPARTMENT OF TRANSPORTATION	BRIDGE APPROACH SLAB DETAILS STRUCTURE NO. 039-0074	F.A.P. RTE.	SECTION	COUNTY	TOTAL SHEETS / SHEET NO.
		CHECKED -	REVISED -			686	114B-1	JACKSON	91 / 114
	PLOT DATE = 19-OCT-2011	DRAWN - E. KRACK	REVISED -					CONTRACT NO. 78049	
FILE NAME=039-0074978049-Approach Slab Details.dgn		CHECKED - B. ERSCHEN	REVISED -		SHEET NO. 12 OF 35 SHEETS			ILLINOIS FED. AID PROJECT	

15:47 19-OCT-2011 P:\CIX26703\T00cadd\T09st-\039-0074978049-Approach Slab Details.dgn

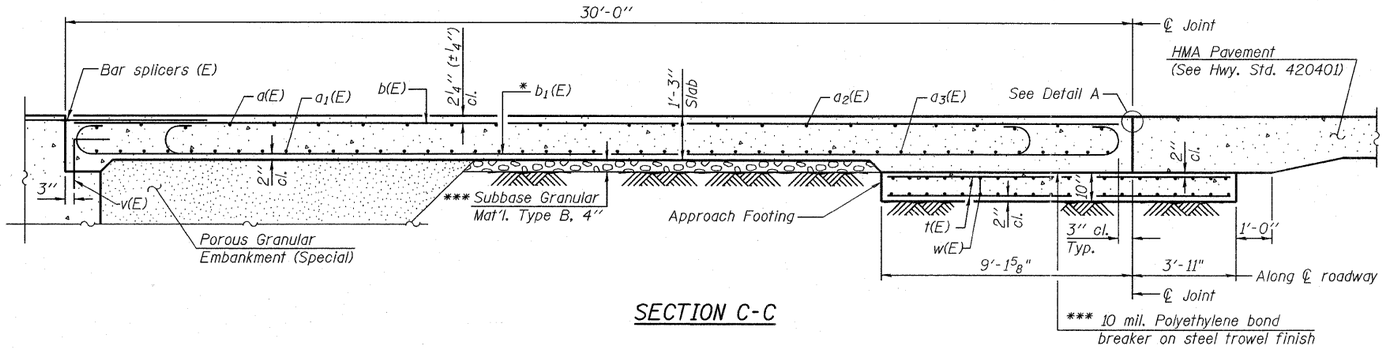

SECTION C-C

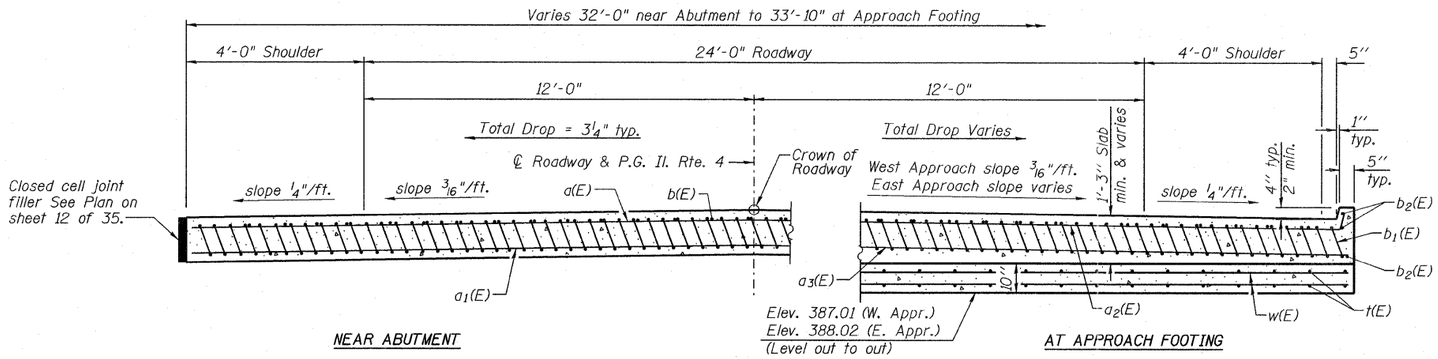

SECTION D-D

(See Plan for dimensions not shown)

Notes:

See sheet 12 of 35 for Detail A.
Approach Slab shall be paid for as Concrete Superstructure.
Approach Footing concrete shall be paid for as Concrete Structures.
Reinforcement shall be paid for as Reinforcement Bars, Epoxy Coated.
For v(E) bar details, see sheet No. 22, 23, 24 and 25 of 35.
The approach footing maximum applied service bearing pressure (Qmax) = 2.0 ksf.
For bar splicer details, see sheet 29 of 35.
Cost of excavation for approach footing included with Concrete Structures.
For Porous Granular Embankment (Special) and drainage treatment details, see sheet 3 of 35.

* Tilt #9 b_1(E) bars as required to maintain clearance.

*** Cost included with Concrete Superstructure.

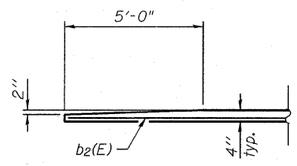

VIEW E-E

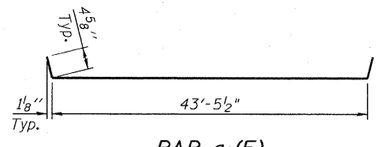

BAR a_2(E)

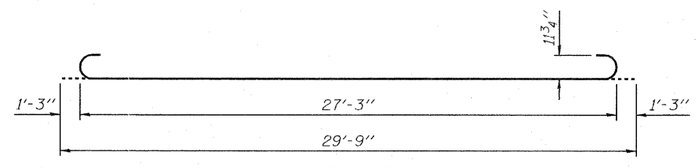

BAR b_1(E)

TWO APPROACHES
BILL OF MATERIAL

Bar	No.	Size	Length	Shape
a(E)	20	#4	41'-4"	
a1(E)	34	#5	41'-4"	
a2(E)	30	#4	44'-3"	
a3(E)	58	#5	43'-7"	
b(E)	52	#4	29'-8"	
b1(E)	162	#9	29'-9"	
b2(E)	12	#4	16'-3"	
t(E)	140	#4	12'-7"	
w(E)	80	#5	43'-8"	
Concrete Superstructure			Cu. Yd.	100.0
Concrete Structures			Cu. Yd.	27.3
Reinforcement Bars, Epoxy Coated			Pound	27,100

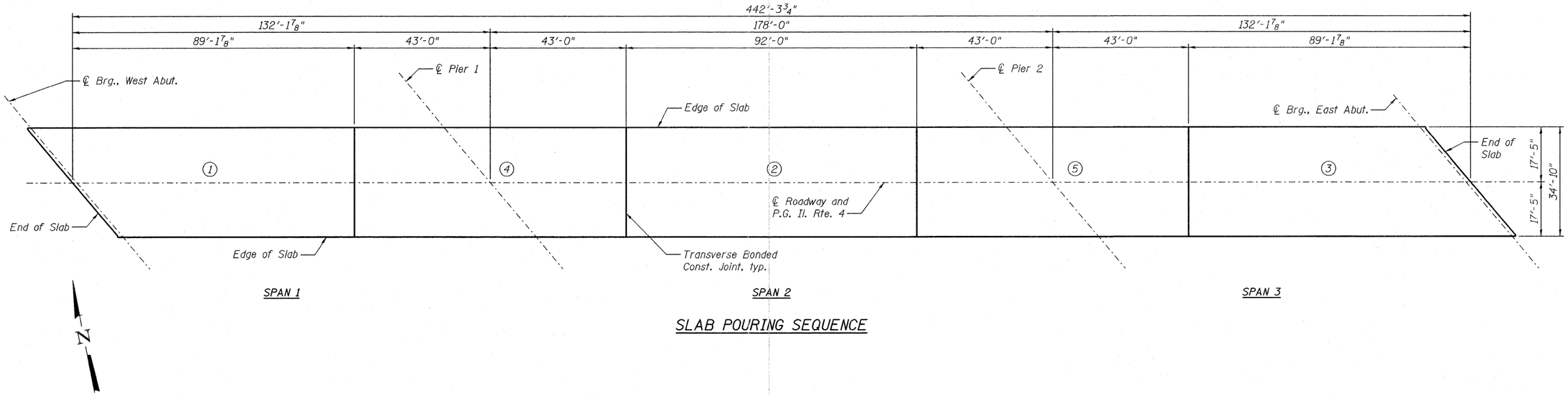

SLAB POURING SEQUENCE

NOTES

When the deck pour is stopped for the day at one or more of the transverse bonded construction joints in the deck pouring sequence as shown, the next pour shall not be made until both of the following are met:

1. At least 72 hours shall have elapsed from the end of the previous pour.
2. The concrete strength shall have attained a minimum flexural strength of 650 psi or a minimum compressive strength of 3,500 psi.

15:47 19-OCT-2011 P:\CIX26703\700cadd\709str\039-0074978049-Slab Pouring.dgn

JACOBS	USER NAME =	DESIGNED - B. ERSCHEN	REVISED -	STATE OF ILLINOIS DEPARTMENT OF TRANSPORTATION	SLAB POURING SEQUENCE STRUCTURE NO. 039-0074	F.A.P. RTE.	SECTION	COUNTY	TOTAL SHEETS	SHEET NO.
		CHECKED - M. CRONIN	REVISED -			686	114B-1	JACKSON	93	114
	PLOT DATE = 19-OCT-2011	DRAWN - E. KRACK	REVISED -					CONTRACT NO. 78049		
FILE NAME=039-0074978049-Slab Pouring.dgn		CHECKED - B. ERSCHEN	REVISED -		SHEET NO. 14 OF 35 SHEETS		ILLINOIS FED. AID PROJECT			

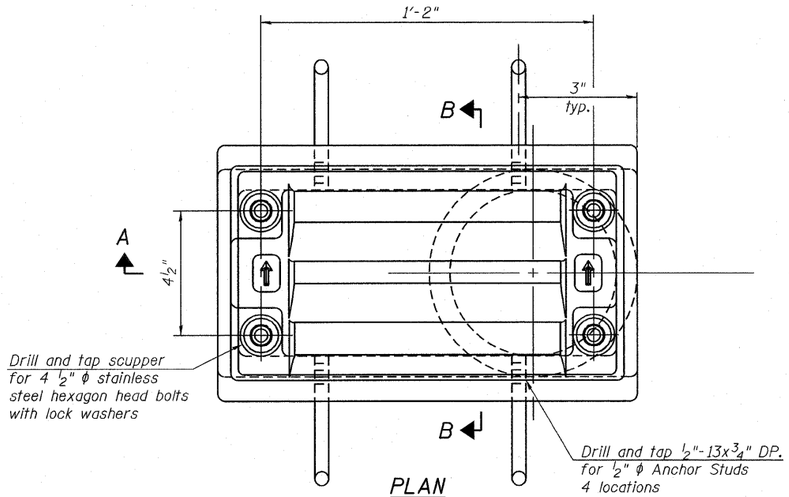

PLAN

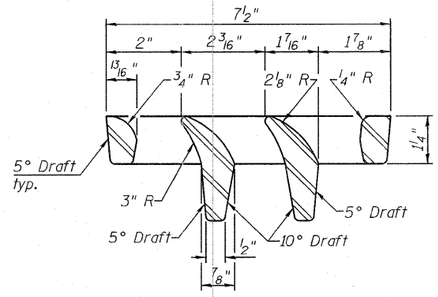

VANE GRATE DETAIL

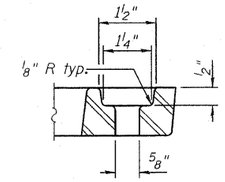

BOLT HOLE DETAIL

Notes:

All cast iron parts shall be gray iron conforming to the requirements of AASHTO M 105, Class 35B.

Bolts, anchor studs, washers and nuts shall conform to the requirements of ASTM A 307 and shall be galvanized according to AASHTO M 232.

Downspouts located on the exterior side of a painted steel fascia beam shall be painted with the finish coat specified for the exterior side of the fascia beam.

As an alternate, bolts, anchor studs, washers and nuts may be stainless steel according to Article 1006.29(d) of the Standard Specifications.

Structural steel weldments of equal sections and of the same configuration may be substituted for the cast iron scupper frame. Fillet or full penetration welds shall be used for the weldments. Details shall be submitted to the Engineer for approval. Structural steel weldments shall not be substituted for the cast iron scupper grate. Structural steel frames and downspouts shall be galvanized according to AASHTO M111.

The Contractor shall take appropriate measures to assure that Protective Coat is not applied to the scupper.

Cost of the Grate, Frame, Downspout, Anchor Studs, Bolts, Washers and Nuts including complete installation of the scupper shall be paid for at the contract unit price each for Drainage Scupper, DS-11.

Alternate fiberglass downspout conforming to ASTM D 2996 with a short-time rupture strength hoop tensile stress of 30,000 psi min. may be used in lieu of the cast iron or steel equivalent.

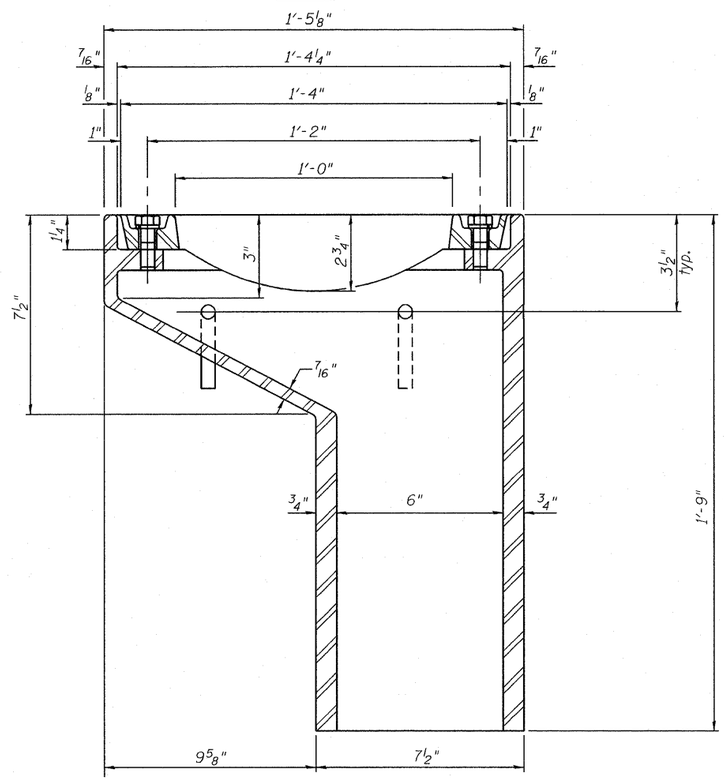

SECTION A-A

See sheet 10 of 35 for scupper location relative to parapet.

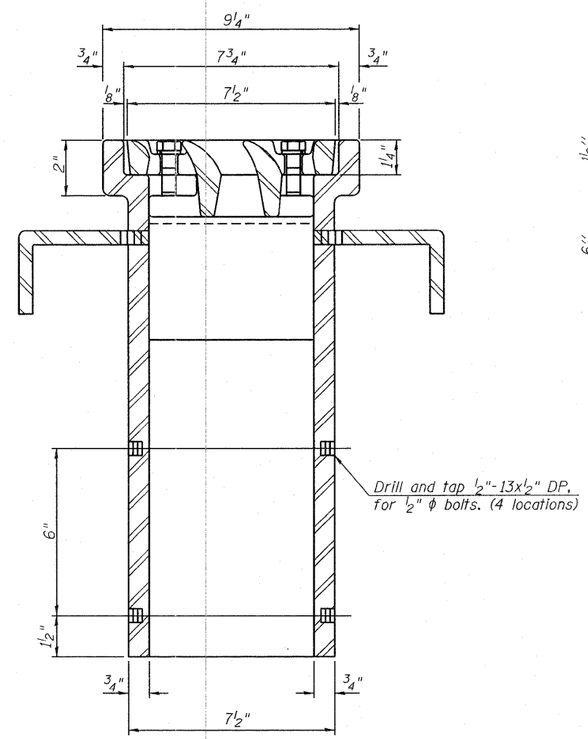

SECTION B-B

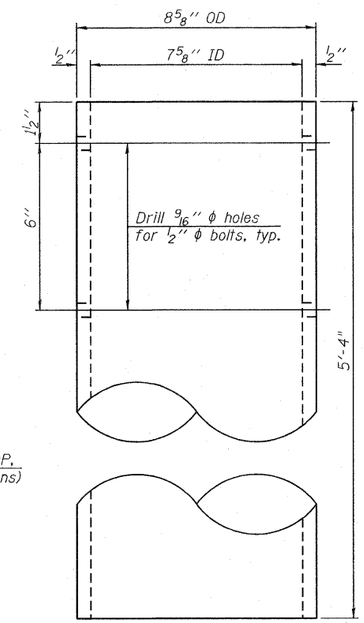

DOWNSPOUT

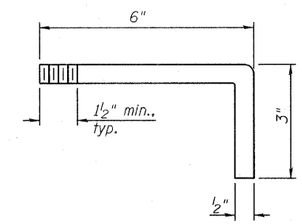

ANCHOR STUD DETAIL

BILL OF MATERIAL

ITEM	UNIT	QUANTITY
Drainage Scupper, DS-11	Each	2

DS-11 7-1-10

JACOBS	USER NAME =	DESIGNED -	REVISED -	STATE OF ILLINOIS DEPARTMENT OF TRANSPORTATION	DRAINAGE SCUPPER, DS-11 STRUCTURE NO. 039-0074	F.A.P. RTE.	SECTION	COUNTY	TOTAL SHEETS	SHEET NO.
		CHECKED -	REVISED -			686	114B-1	JACKSON	94	114
	PLOT DATE = 19-OCT-2011	DRAWN - C. SALLADE	REVISED -					CONTRACT NO. 78049		
FILE NAME=039-0074978049-Drainage Scupper.dgn		CHECKED - B. ERSCHEN	REVISED -		SHEET NO. 15 OF 35 SHEETS		ILLINOIS FED. AID PROJECT			

15:47 19-OCT-2011 P:\CIX26703\700cadd\709str\039-0074978049-Drainage Scupper.dgn

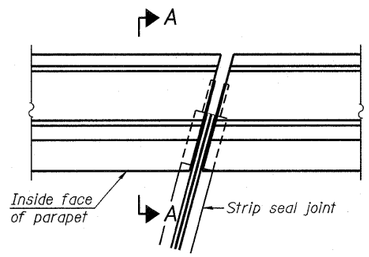

PLAN
(For skews ≤ 30°)

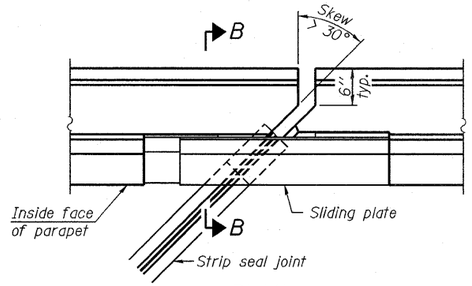

PLAN
(For skews > 30°)
Showing point block

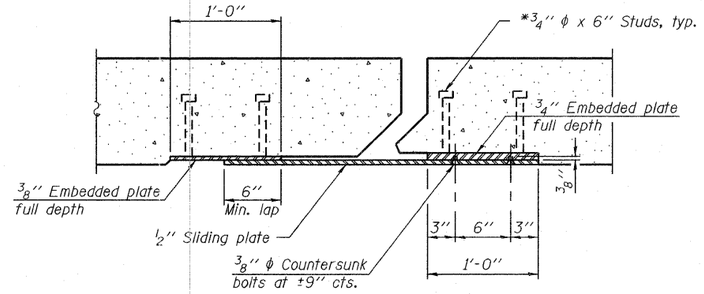

SECTION C-C

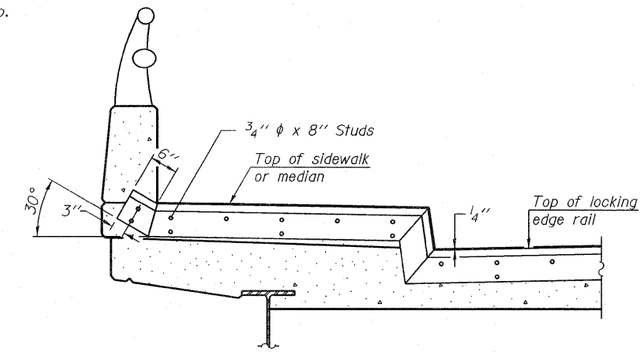

TYPICAL END TREATMENT AT SIDEWALK OR MEDIAN

Shorter plates with a single row of studs at 12" cts. may be necessary on medians which are shallower than 9". See manufacturer's recommendation.

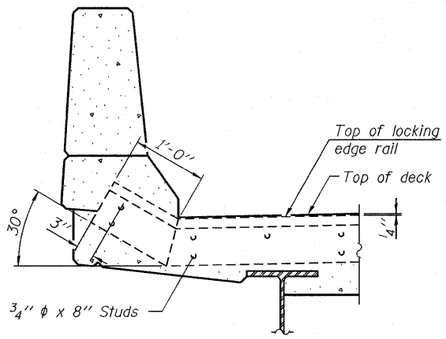

SECTION A-A

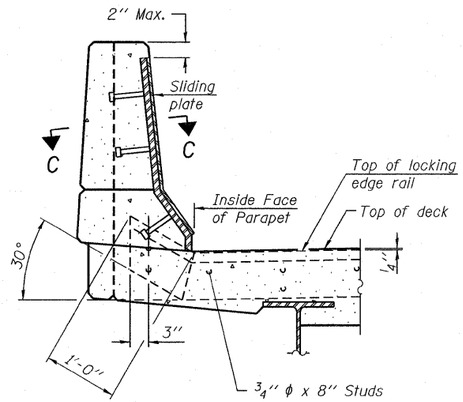

SECTION B-B

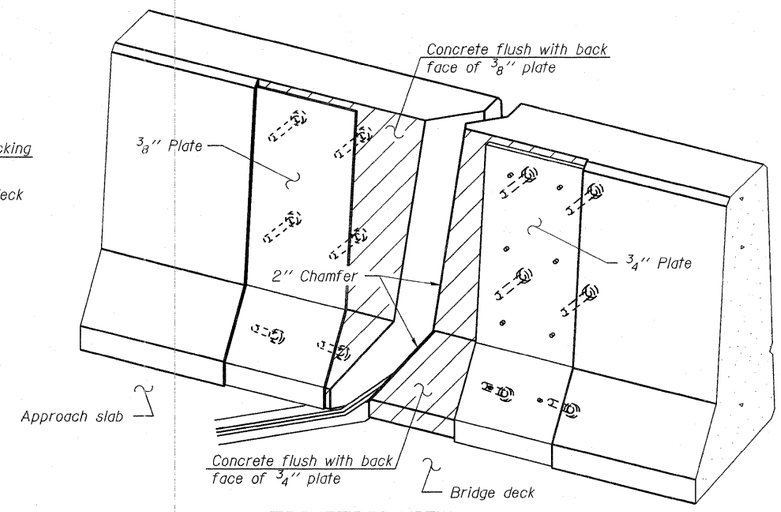

TRIMETRIC VIEW
(Showing back plates only)

Notes:

The strip seal shall be made continuous and shall have a minimum thickness of 1/4". The configuration of the strip seal shall match the configuration of the Locking Edge Rails. Open or "webbed" strip seal gland configurations are not permitted. The gland shall be sized for a maximum rated movement of 4 inches.

The Locking Edge Rails depicted are conceptual only, except for the minimum dimensions shown. The actual configuration of the Locking Edge Rails and matching strip seal may vary from manufacturer to manufacturer. Flanged edge rails will not be allowed. Locking Edge Rails may be spliced at slope discontinuities.

The manufacturer's recommended installation methods shall be followed.

The joint opening and deck dimensions detailed on the superstructure are based on a rolled rail expansion joint. If the Contractor elects to use the welded rail expansion joint, the opening and deck dimensions shall be modified according to the dimensions detailed on this sheet. Required modifications shall be made at no additional cost to the State.

All steel components shall be galvanized after fabrication according to Article 520.03 of the Standard Specifications.

Maximum space between rail segments at stage lines shall be 3/16", sealed with a suitable sealant.

Parapet plates and anchorage studs for skews > 30° included in the cost of Preformed Joint Strip Seal.

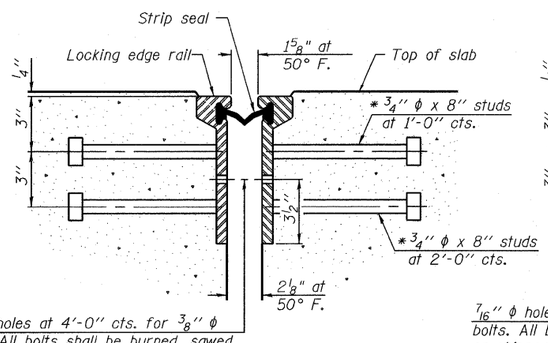

SECTION THRU ROLLED RAIL JOINT

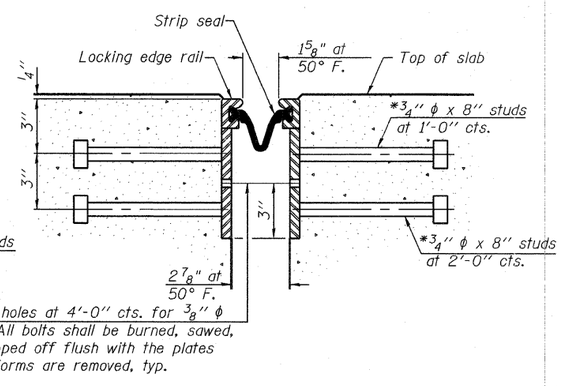

SECTION THRU WELDED RAIL JOINT

* Granular or solid flux filled headed studs conforming to Article 1006.32 of the Std. Specs., automatically end welded.

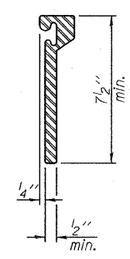

ROLLED EXTRUDED RAIL

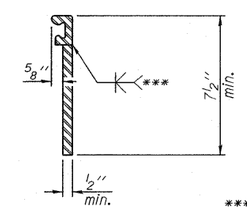

WELDED RAIL

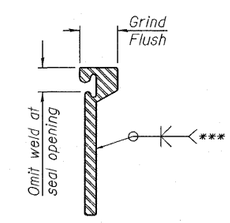

*** Back gouge not required if complete joint penetration is verified by mock-up.

LOCKING EDGE RAIL SPLICE

The inside of the locking edge rail groove shall be free of weld residue.

Rolled rail shown, welded rail similar.

LOCKING EDGE RAILS

BILL OF MATERIAL

Item	Unit	Total
Preformed Joint Strip Seal	Foot	87.5

EJ-SSJ 7-1-10

19-OCT-2011 15:47 P:\CIX26703\T00cadd\709str\039-0074978049-Strip Seal.dgn

JACOBS	USER NAME =	DESIGNED -	REVISED -
		CHECKED -	REVISED -
	PLOT DATE = 19-OCT-2011	DRAWN - C. SALLADE	REVISED -
FILE NAME=039-0074978049-Strip Seal.dgn		CHECKED - B. ERSCHEN	REVISED -

STATE OF ILLINOIS
DEPARTMENT OF TRANSPORTATION

PREFORMED JOINT STRIP SEAL
STRUCTURE NO. 039-0074

SHEET NO. 16 OF 35 SHEETS

F.A.P. RTE.	SECTION	COUNTY	TOTAL SHEETS	SHEET NO.
686	114B-1	JACKSON	95	114
		CONTRACT NO. 78049		
		ILLINOIS FED. AID PROJECT		

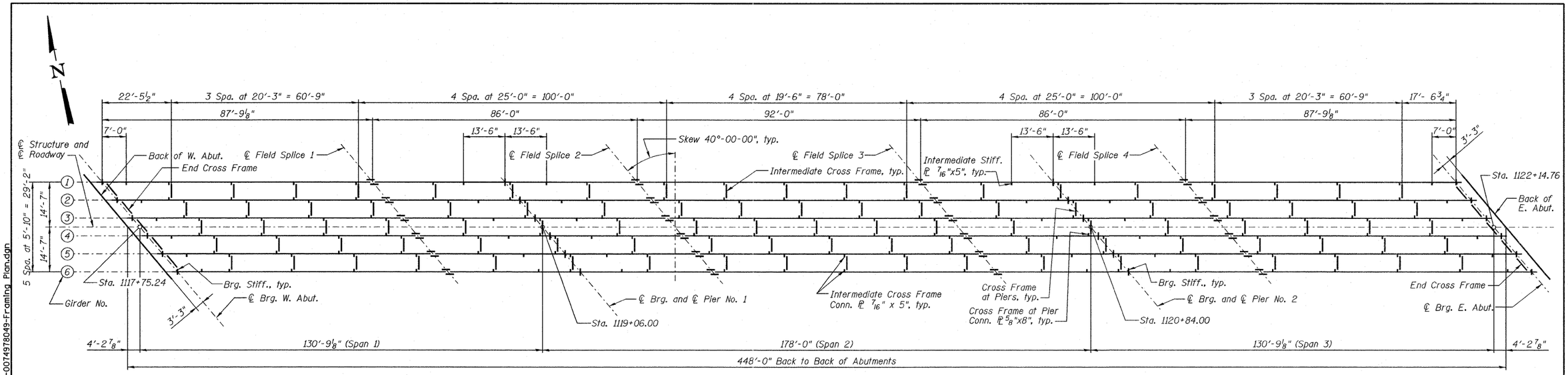

FRAMING PLAN

INTERIOR GIRDER MOMENT TABLE				
		0.4 Sp. 1 or 0.6 Sp. 3	Pier 1 or Pier 2	0.5 Sp. 2
I_s	(in^4)	23941	59937	24957
$I_c(n)$	(in^4)	56037	67269	58529
$I_c(3n)$	(in^4)	41584	67269	43041
S_s	(in^3)	805	1868	839
$S_c(n)$	(in^3)	1115	2255	1180
$S_c(3n)$	(in^3)	1013	2255	1063
DC1	(k/')	0.78	0.93	0.79
M_{DC1}	('k)	685	2428	833
DC2	(k/')	0.15	0.15	0.15
M_{DC2}	('k)	137	428	166
DW	(k/')	0.27	0.27	0.27
M_{DW}	('k)	244	763	296
M_{LL+IM}	('k)	1588	2267	1660
M_u(Strength I)	('k)	4137	8682	4598
$\phi_f M_n$, $\phi_f M_{nc}$	('k)	5540	9191	5748
f_s DC1	(ksi)	10.2	15.6	11.9
f_s DC2	(ksi)	1.6	2.3	1.9
f_s DW	(ksi)	2.9	4.1	3.3
f_s 1.3(LL+IM)	(ksi)	22.2	15.7	21.9
f_s (Service II)	(ksi)	36.9	37.7	39.0
V_f	(k)	33.4	30.4	30.4

INTERIOR GIRDER REACTION TABLE HL93 Loading (Unfactored)			
		Abut.	Pier
R_{DC1}	(k)	35.5	151.2
R_{DC2}	(k)	6.5	26.4
R_{DW}	(k)	11.6	47.1
R_{LL+IM}	(k)	96.1	174.2
R_{Total}	(k)	149.7	398.9

I_s, S_s: Non-composite moment of inertia and section modulus of the steel section used for computing f_s (Total-Strength I, and Service II) due to non-composite dead loads ($in.^4$ and $in.^3$).

$I_c(n)$, $S_c(n)$: Composite moment of inertia and section modulus of the steel and deck based upon the modular ratio, "n", used for computing f_s (Total-Strength I, and Service II) due to short-term composite live loads in positive moment region. Composite moment of inertia and section modulus of the steel and deck reinforcing based on cracked composite section in negative moment region. ($in.^4$ and $in.^3$).

$I_c(3n)$, $S_c(3n)$: Composite moment of inertia and section modulus of the steel and deck based upon 3 times the modular ratio, "3n", used for computing f_s (Total-Strength I, and Service II) due to long-term composite (superimposed) dead loads in positive moment region. Composite moment of inertia and section modulus of the steel and deck reinforcing based on cracked composite section in negative moment region. ($in.^4$ and $in.^3$)

DC1: Un-factored non-composite dead load (kips/ft.).

M_{DC1}: Un-factored moment due to non-composite dead load (kip-ft.).

DC2: Un-factored long-term composite (superimposed excluding future wearing surface) dead load (kips/ft.).

M_{DC2}: Un-factored moment due to long-term composite (superimposed excluding future wearing surface) dead load (kip-ft.).

DW: Un-factored long-term composite (superimposed future wearing surface only) dead load (kips/ft.).

M_{DW}: Un-factored moment due to long-term composite (superimposed future wearing surface only) dead load (kip-ft.).

M_{LL+IM}: Un-factored live load moment plus dynamic load allowance (impact) (kip-ft.).

M_u (Strength I): Factored design moment (kip-ft.).
$1.25\ (M_{DC1} + M_{DC2}) + 1.5\ M_{DW} + 1.75\ M_{LL+IM}$

$\phi_f M_n$: Compact composite positive moment capacity computed according to Article 6.10.7.1 (kip-ft.).

$\phi_f M_{nc}$: Compact composite negative moment capacity computed according to Article A6.1.1 (kip-ft.).

f_s (Service II): Sum of stresses as computed from the moments below (ksi).
$M_{DC1} + M_{DC2} + M_{DW} + 1.3\ M_{LL+IM}$

V_f: Maximum factored shear range in composite portion of span computed according to Article 6.10.10.

Notes:

All cross frames or diaphragms shall be installed as steel is erected and secured with erection pins and bolts except as otherwise noted. Individual cross frames or diaphragms at supports may be temporarily disconnected to install bearing anchor rods.

Diaphragms and connecting plates and angles shall conform to the requirements of AASHTO M270 Grade 50W.

NOTE:

Structural steel was furnished in Contract 78283 and is shown for information only. Erection is included in Contract 78049.

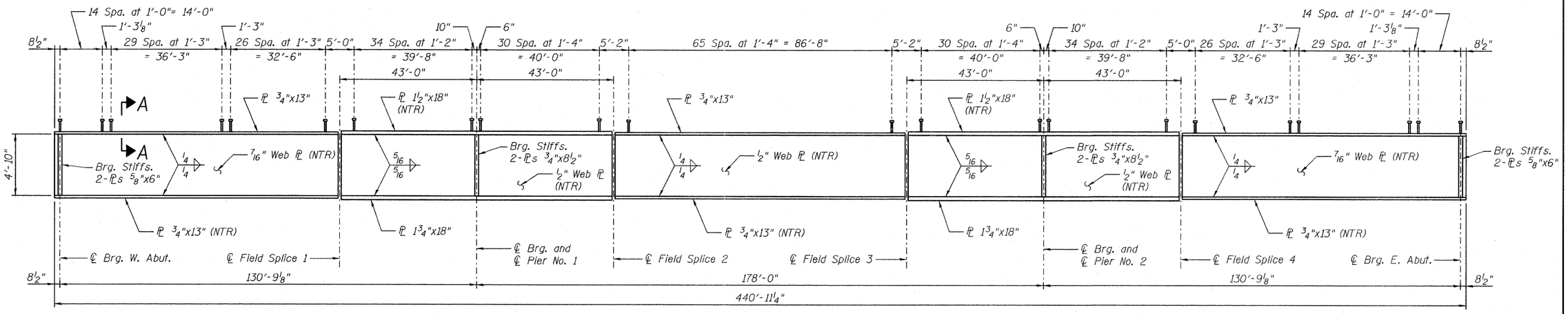

GIRDER ELEVATION

"NTR" denotes plates to which notch toughness requirements are applicable.

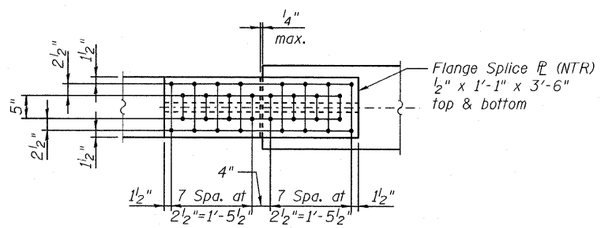

TOP AND BOTTOM SPLICE PLATES

NOTE:
Structural steel was furnished in Contract 78283 and is shown for information only. Stud Shear Connectors and erection are included in Contract 78049.

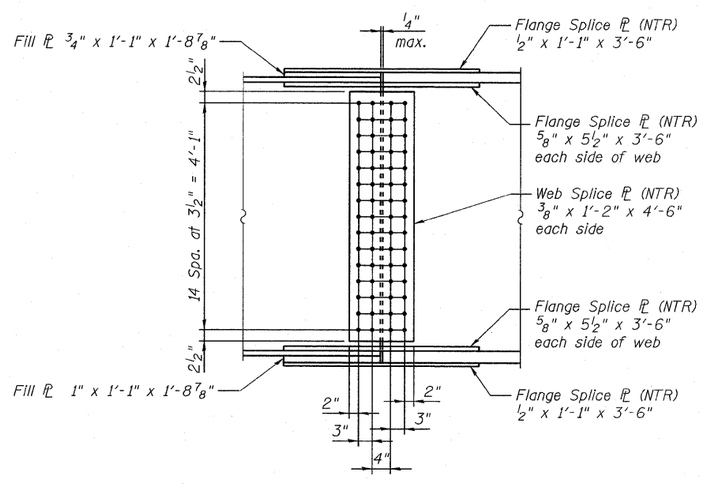

SPLICE DETAIL

(24 Required)

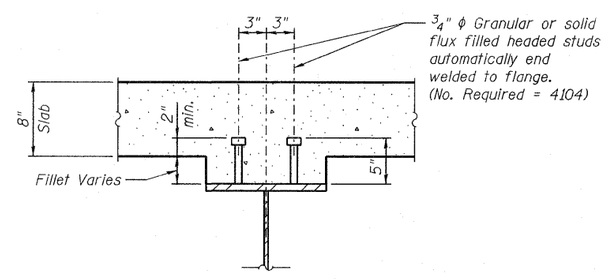

SECTION A-A

Notes:
Load carrying components designated "NTR" shall conform to the Supplemental Requirements for Notch Toughness, Zone 2.
Structural steel shall conform to the requirements of AASHTO M270 Grade 50W except as noted.
All bolts are 7/8" ϕ ASTM A325 high strength bolts in 15/16" ϕ holes.

JACOBS	USER NAME =	DESIGNED - B. ERSCHEN	REVISED -	STATE OF ILLINOIS DEPARTMENT OF TRANSPORTATION	GIRDER DETAILS STRUCTURE NO. 039-0074	F.A.P. RTE.	SECTION	COUNTY	TOTAL SHEETS / SHEET NO.
		CHECKED - M. CRONIN	REVISED -			686	114B-1	JACKSON	97 / 114
	PLOT DATE = 19-OCT-2011	DRAWN - C. SALLADE	REVISED -					CONTRACT NO. 78049	
FILE NAME=039-0074978049-SteelDetails.dgn		CHECKED - J. SMITH	REVISED -		SHEET NO. 18 OF 35 SHEETS		ILLINOIS FED. AID PROJECT		

P:\CIX26703\700cadd\709str\039-0074978049-SteelDetails.dgn 19-OCT-2011 15:47

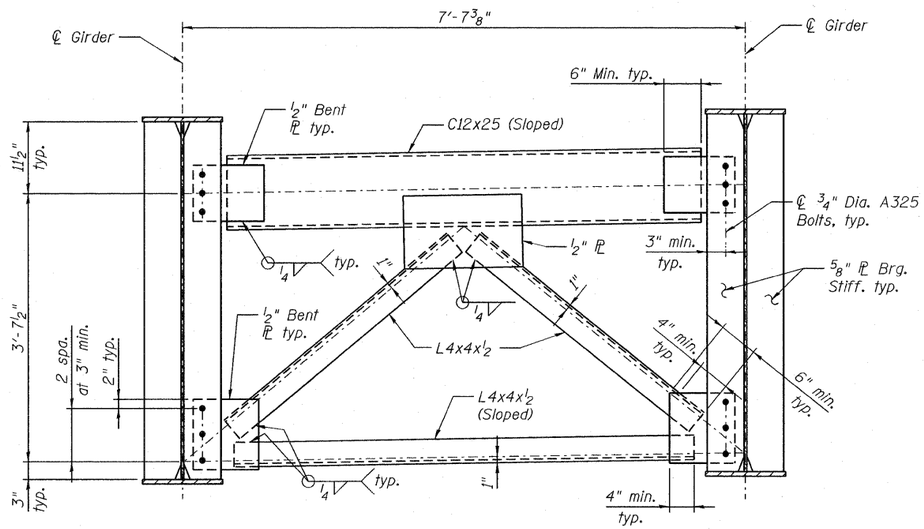

END CROSS FRAME AT ABUTMENTS

Two hardened washers shall be required for all oversized holes.

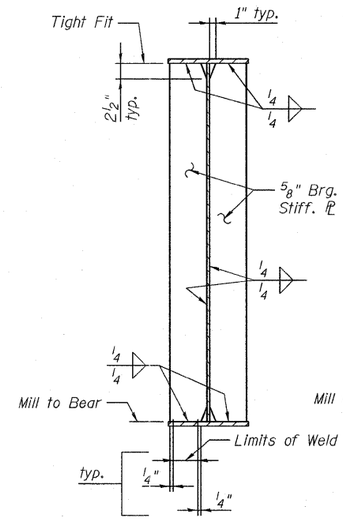

BEARING STIFFENER AT ABUTMENTS

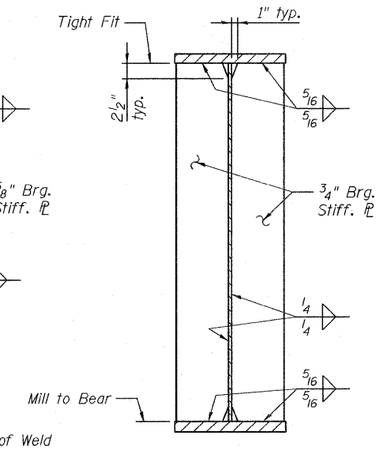

BEARING STIFFENER AT PIERS

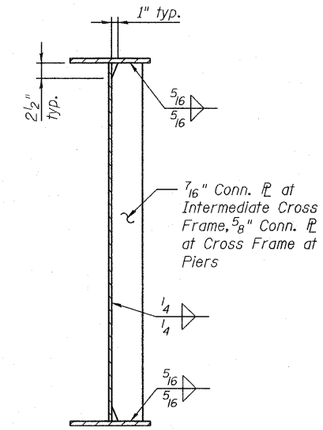

AT CROSS FRAMES

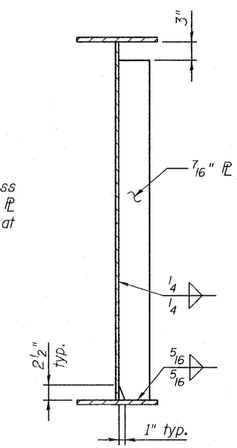

INTERMEDIATE STIFFENER

(Detail of Intermediate stiffener is shown near pier. Intermediate stiffener near abutment shall have a 3" gap at bottom flange)

CONNECTION PLATE DETAILS

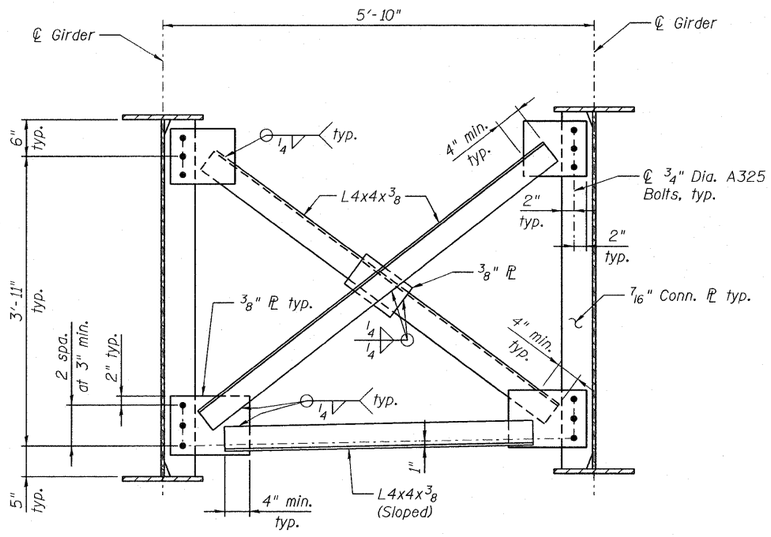

TYPICAL INTERMEDIATE CROSS FRAME

Two hardened washers shall be required for all oversized holes.

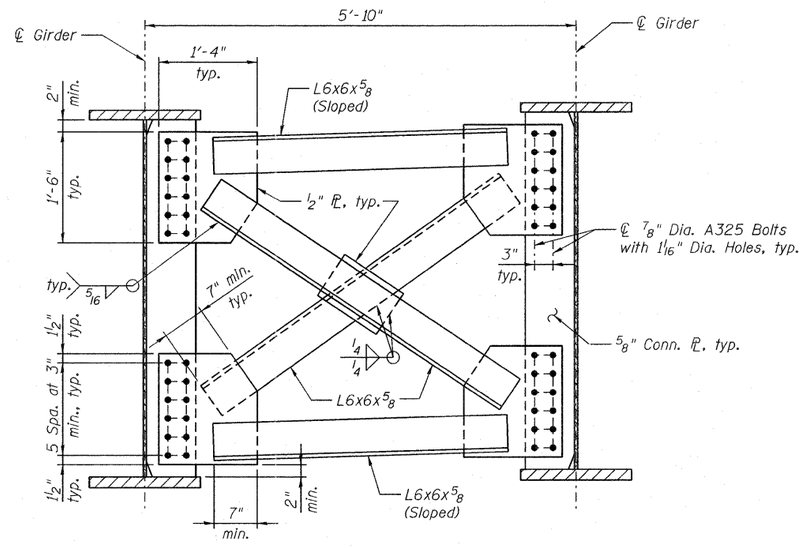

CROSS FRAME AT PIERS

Two hardened washers shall be required for all oversized holes.

STRUCTURAL STEEL NOTES

All structural steel shall be AASHTO M270, Grade 50W unless otherwise noted.

Fasteners shall be 3/4" diameter high strength bolts with 15/16" diameter open holes unless otherwise noted.

High strength bolts are designed for a Class A contact surface in a standard hole for a slip-critical connection.

The contact surface of joints with oversized holes shall be free of paint or lacquer.

All bearing stiffeners shall be vertical in the completed structure.

NOTE:

Structural steel was furnished in Contract 78283 and is shown for information only. Erection is included in Contract 78049.

P:\CIX26703\700cadd\709str\039-0074978049-Cross Frame.dgn 19-OCT-2011 15:47

JACOBS	USER NAME =	DESIGNED - B. ERSCHEN	REVISED -	STATE OF ILLINOIS DEPARTMENT OF TRANSPORTATION	CROSS FRAME DETAILS STRUCTURE NO. 039-0074	F.A.P. RTE.	SECTION	COUNTY	TOTAL SHEETS	SHEET NO.
		CHECKED - M. CRONIN	REVISED -			686	114B-1	JACKSON	98	114
	PLOT DATE = 19-OCT-2011	DRAWN - E. KRACK	REVISED -					CONTRACT NO. 78049		
FILE NAME=039-0074978049-Cross Frame.dgn		CHECKED - J. SMITH	REVISED -		SHEET NO. 19 OF 35 SHEETS		ILLINOIS FED. AID PROJECT			

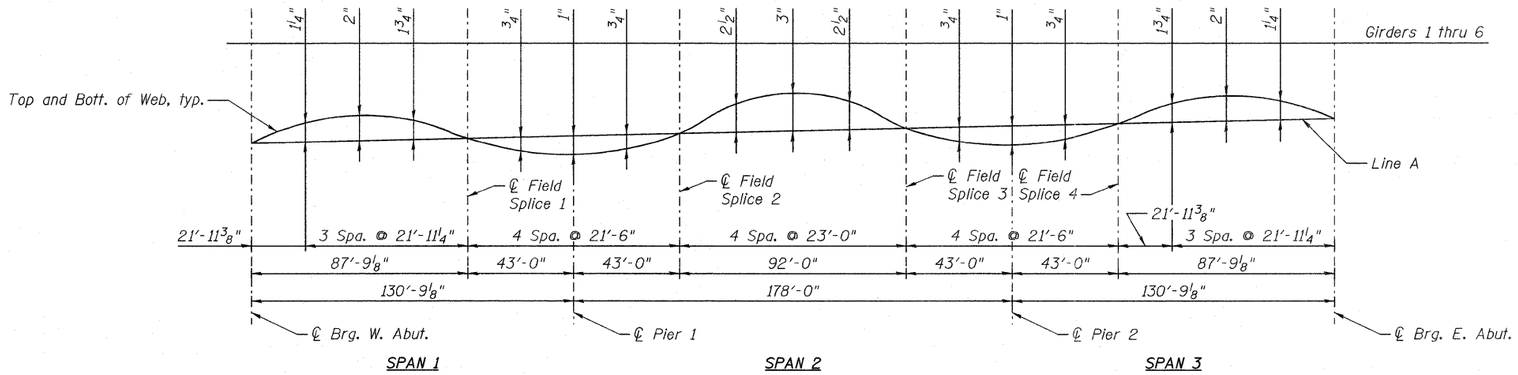

CAMBER DIAGRAM

* TOP OF GIRDER WEB ELEVATIONS								
Location / Girder	℄ Brg. West Abut.	℄ Field Splice 1	℄ Brg. and ℄ Pier 1	℄ Field Splice 2	℄ Field Splice 3	℄ Brg. and ℄ Pier 2	℄ Field Splice 4	℄ Brg. East Abut.
Girder 1	388.56	388.72	388.76	388.97	389.15	389.11	389.25	389.44
Girder 2	388.68	388.83	388.87	389.07	389.26	389.22	389.36	389.56
Girder 3	388.78	388.93	388.97	389.17	389.36	389.32	389.46	389.66
Girder 4	388.79	388.94	388.98	389.18	389.37	389.33	389.47	389.67
Girder 5	388.71	388.86	388.90	389.10	389.29	389.25	389.39	389.59
Girder 6	388.61	388.77	388.81	389.01	389.20	389.16	389.30	389.49

* For fabrication only.

Notes:
Line A is a straight line at the top of web plates between ℄ bearing and ℄ field splice or from ℄ field splice to ℄ field splice.
Camber dimensions include correction for cross slope and vertical curve in addition to the correction for dead load.

NOTE:
Structural steel was furnished in Contract 78283 and is shown for information only. Erection is included in Contract 78049.

P:\CIX26703\T00cadd\709str\039-0074978049-Girder Camber.dgn 19-OCT-2011 15:47

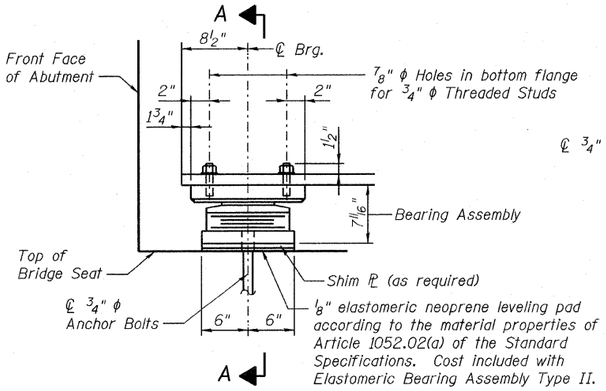

ELEVATION AT ABUTMENT

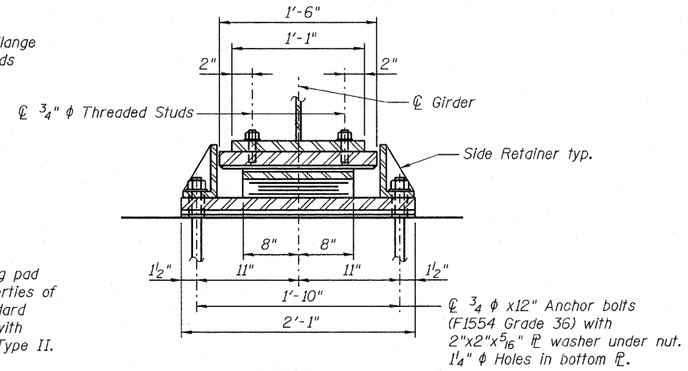

SECTION A-A

TYPE II ELASTOMERIC EXPANSION BEARING AT WEST AND EAST ABUTMENTS

(12 Required Total)

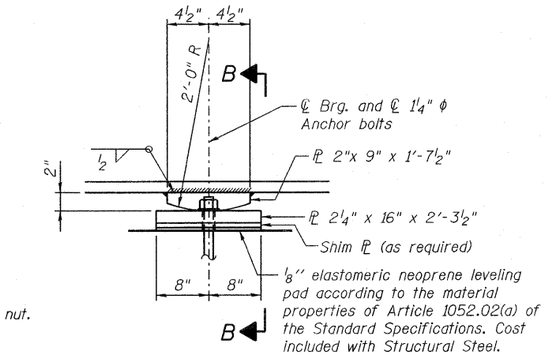

ELEVATION AT PIER

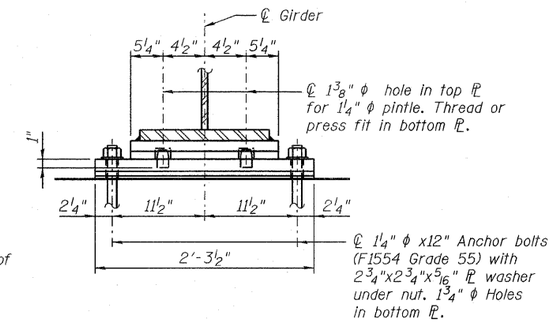

SECTION B-B

FIXED BEARING AT PIER 1 AND PIER 2

(12 Required Total)

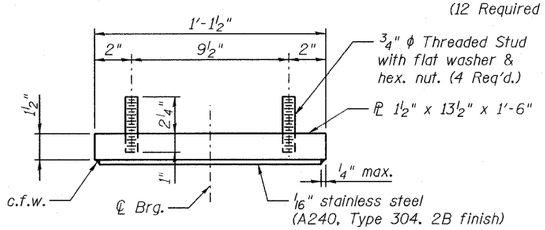

TOP BEARING ASSEMBLY

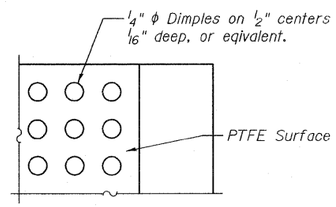

PLAN-PTFE SURFACE

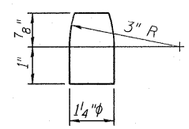

PINTLE

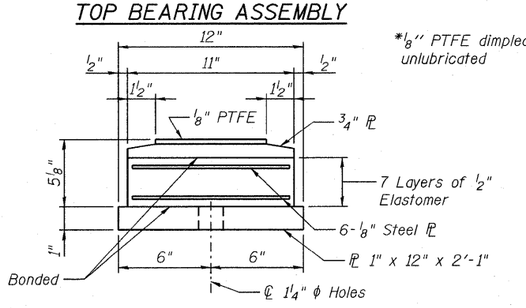

BOTTOM BEARING ASSEMBLY

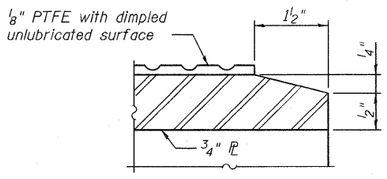

SECTION THRU PTFE

PLANNED SHIMS TABLE

Location	G1	G2	G3	G4	G5	G6
West Abutment	-	-	-	⅛"	-	-
Pier 1	-	-	-	⅛"	-	-
Pier 2	-	-	-	⅛"	-	-
East Abutment	-	-	-	⅛"	-	-

Notes:

Anchor bolts shall be ASTM F1554 all-thread (or an Engineer-approved alternate material) of the grade(s) and diameter(s) specified.

The corresponding specified grade of AASHTO M314 anchor bolts may be used in lieu of ASTM F1554.

Anchor bolts at fixed bearings may be either cast in place or installed in holes drilled after the supported member is in place.

Anchor bolts for Type II bearings shall be placed in holes drilled in the concrete through holes in the bottom bearing plate after members are in place. Side retainers shall be placed after bolts are installed.

Drilled and set anchor bolts shall be installed according to Article 521.06 of the Standard Specifications.

Side retainers and other steel members required for the elastomeric bearing assembly shall be included in the cost of Elastomeric Bearing Assembly, Type II.

The ⅛" PTFE sheet shall be bonded directly to the top steel plate with a two-component, medium viscosity epoxy resin, conforming to the requirements of the Federal Specification MMM-A-134, Type I. The bond agent shall be applied on the full area of the contact surfaces.

Bonding of ⅛" PTFE sheet during vulcanizing process will be permitted provided the process and method of adjusting assembly height is approved by the Engineer.

The anchor bolt sizes and grades shown constitute a calculated seismic structural fuse. Substitution of higher diameter and/or grade anchor bolts will not be allowed.

The structural steel of the bearing assembly shall conform to the requirements of AASHTO M270 Grade 50W.

Two ⅛" adjusting shims shall be provided for each bearing in addition to all other plates or shims and placed as shown on bearing details.

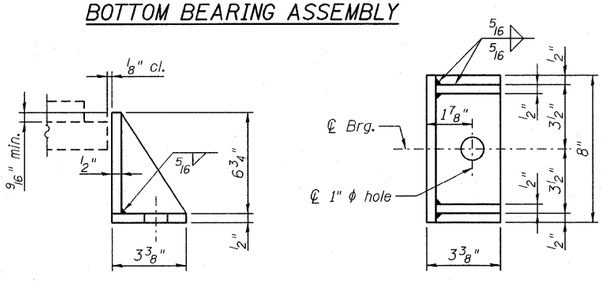

SIDE RETAINER

Equivalent rolled angle with stiffeners will be allowed in lieu of welded plates.

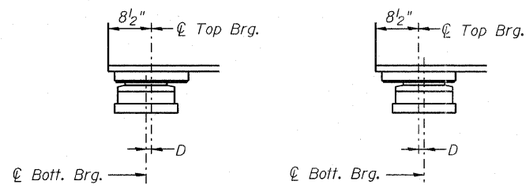

BELOW 50°F. (Move bott. brg. away from fixed brg.)

ABOVE 50°F. (Move bott. brg. toward fixed brg.)

SETTING ANCHOR BOLTS AT EXP. BRG.

D=⅛" per each 100' of expansion for every 15° temp. change from the normal temp. of 50°F.

NOTE:

Structural steel was furnished in Contract 78283 and is shown for information only. Anchor Bolts and bearing erection are included in Contract 78049.

BILL OF MATERIAL

Item	Unit	Total
Elastomeric Bearing Assembly Type II	Each	12
Anchor Bolts, ¾"	Each	24
Anchor Bolts, 1¼"	Each	24

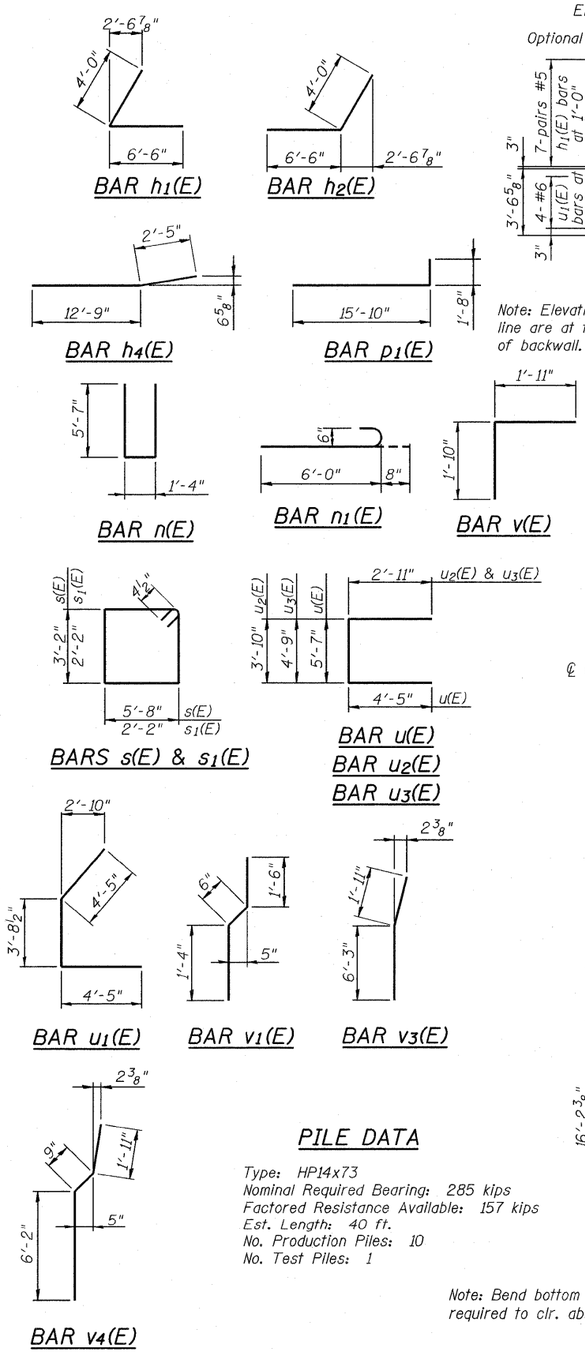

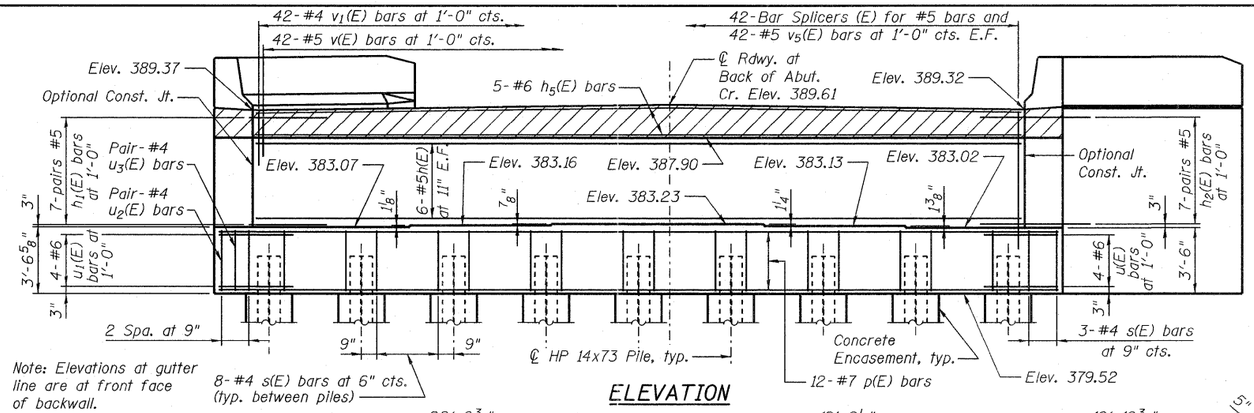

Note: Elevations at gutter line are at front face of backwall.

ELEVATION

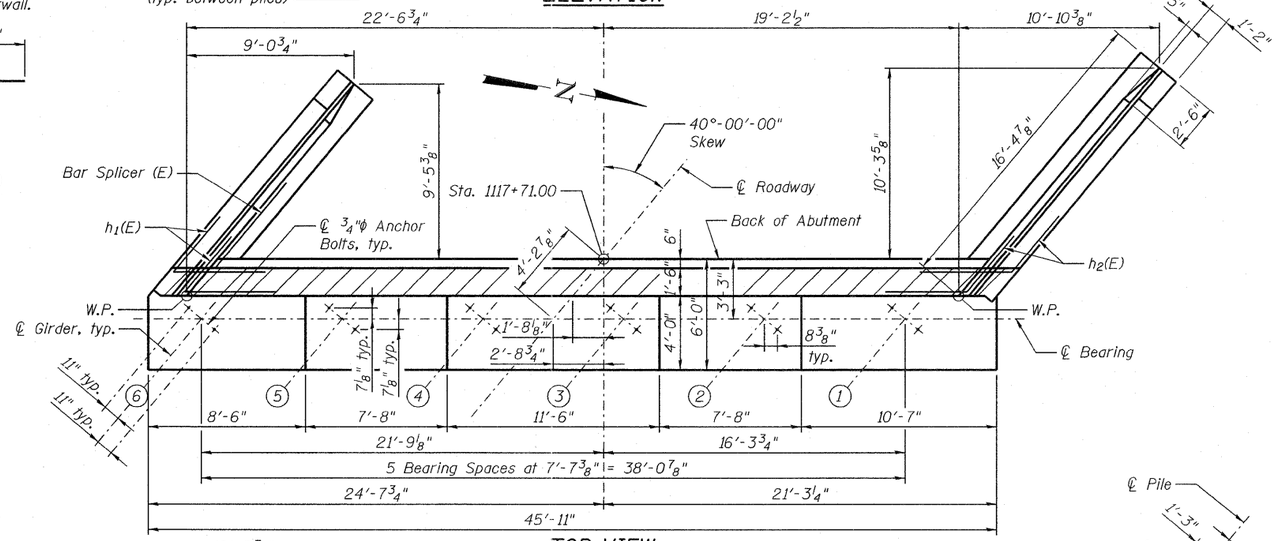

TOP VIEW

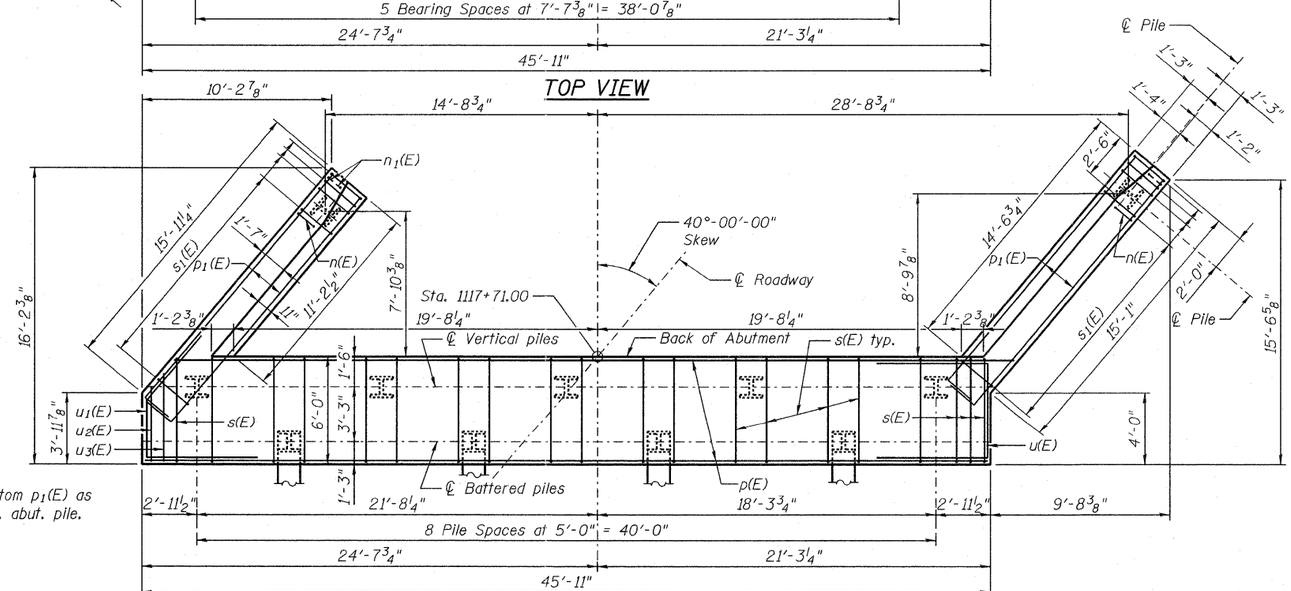

PLAN-PILE CAP

PILE DATA

Type: HP14x73
Nominal Required Bearing: 285 kips
Factored Resistance Available: 157 kips
Est. Length: 40 ft.
No. Production Piles: 10
No. Test Piles: 1

Note: Bend bottom $p_1(E)$ as required to clr. abut. pile.

WEST ABUTMENT BILL OF MATERIAL

Bar	No.	Size	Length	Shape
h(E)	12	#5	41'-7"	
h1(E)	14	#5	10'-6"	
h2(E)	14	#5	10'-6"	
h3(E)	26	#4	15'-3"	
h4(E)	18	#4	15'-2"	
h5(E)	5	#6	41'-7"	
n(E)	26	#6	12'-6"	
n1(E)	12	#6	6'-8"	
p(E)	12	#7	45'-7"	
p1(E)	12	#7	17'-6"	
s(E)	68	#4	18'-5"	
s1(E)	32	#4	9'-5"	
u(E)	4	#6	14'-5"	
u1(E)	4	#6	12'-7"	
u2(E)	2	#4	9'-8"	
u3(E)	2	#4	10'-7"	
v(E)	42	#5	3'-9"	
v1(E)	42	#4	3'-4"	
v2(E)	32	#6	8'-10"	
v3(E)	6	#6	8'-2"	
v4(E)	26	#6	8'-10"	
v5(E)	84	#5	7'-3"	
Structure Excavation		Cu. Yd.	186	
Concrete Structures		Cu. Yd.	70.3	
Reinforcement Bars, Epoxy Coated		Pound	6,710	
Furnishing - Piles, HP14x73		Foot	400	
Driving Piles		Foot	400	
Test Pile, HP14x73		Each	1	
Concrete Encasement		Cu. Yd.	6.0	
Concrete Sealer		Sq. Ft.	640	

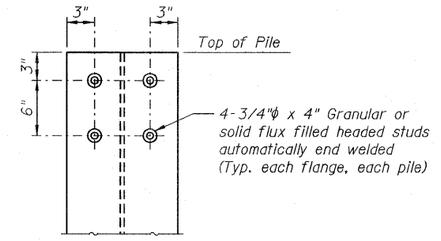

SEISMIC PILE DETAILS

Cost of 3/4"φ Studs shall be included in item "Furnishing Steel Piles, HP14x73."

NOTES

Top of backwall shall conform to longitudinal grade and cross slope of roadway.

Pour steps monolithically with cap.

Space reinforcement in cap to miss anchor bolts.

Concrete Sealer should be applied to the designated areas of the abutment shown on sheet 23 of 35.

All edges shall have a standard 3/4" chamfer except as noted.

For details of Bar Splicers, see sheet 29 of 35.

For details of piles and Concrete Encasement, see sheet 30 of 35.

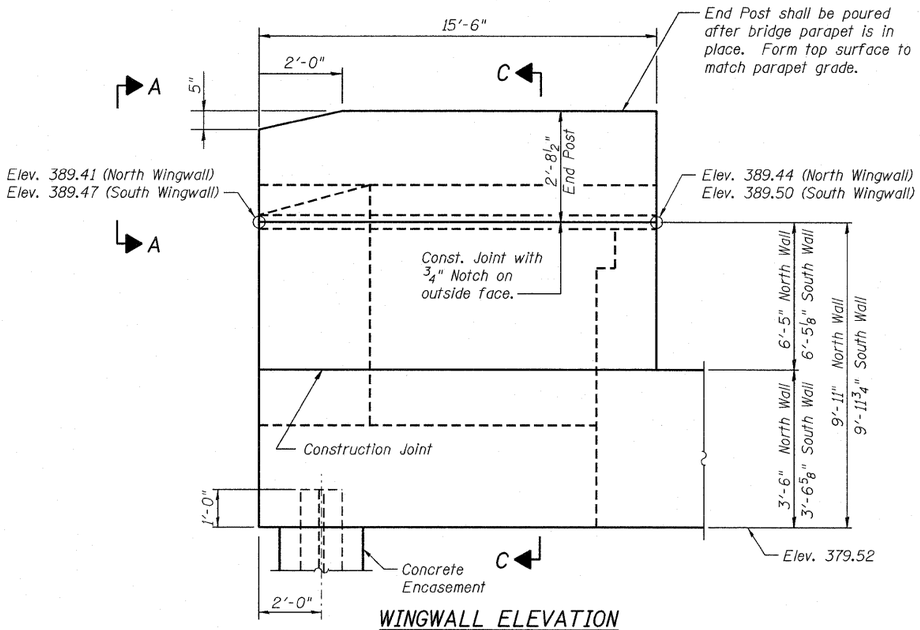

WINGWALL ELEVATION

Showing Dimensions

Note: Elevations shown are at outside face of Wingwall.

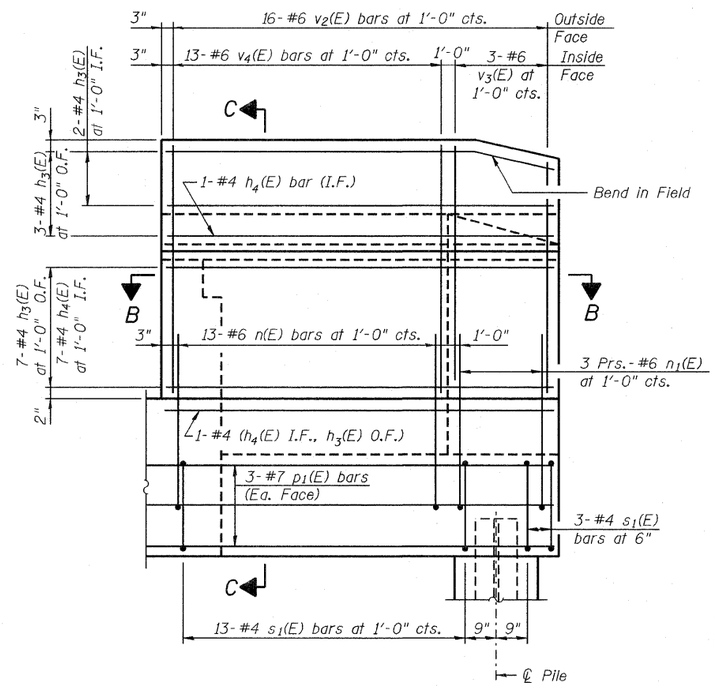

WINGWALL ELEVATION

Showing Reinforcement

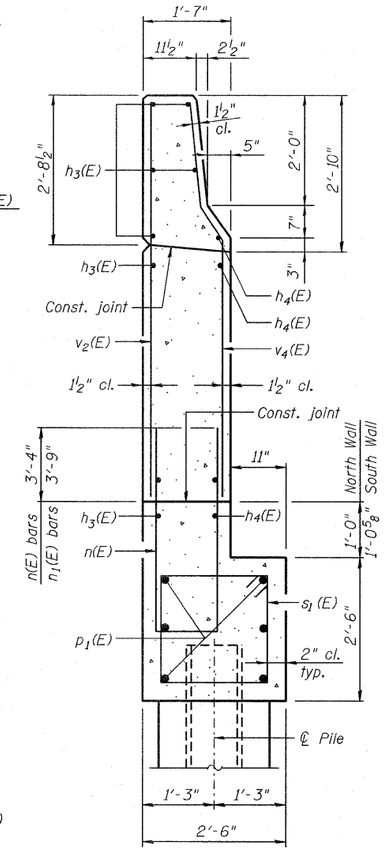

SECTION C-C

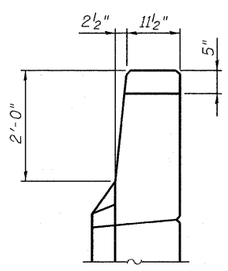

VIEW A-A

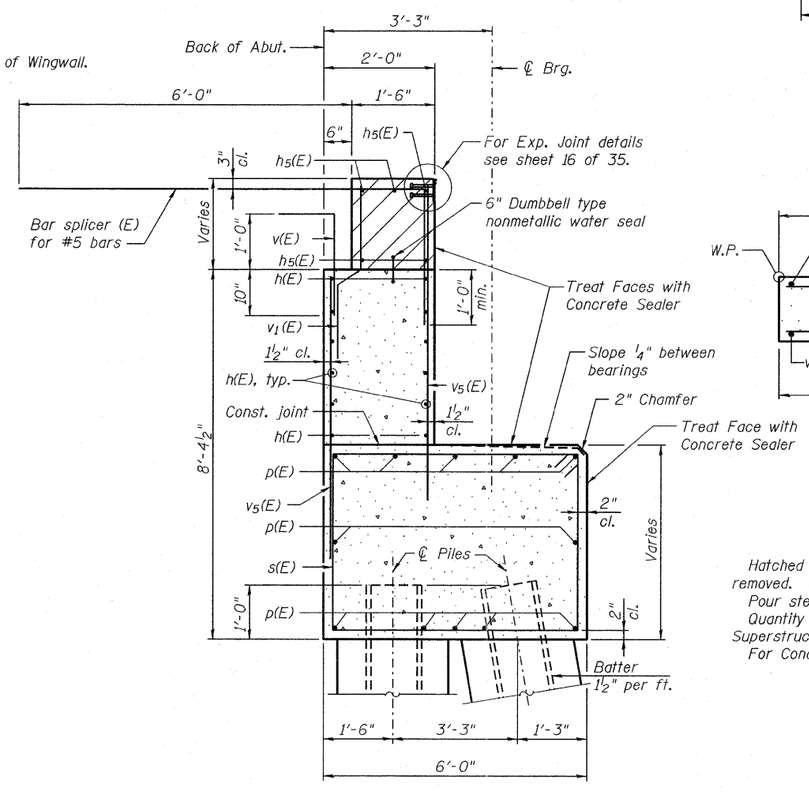

SECTION THRU ABUTMENT

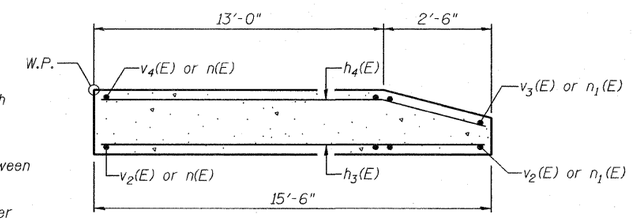

SECTION B-B

NOTES

Hatched area to be poured after superstructure false work has been removed. Quantity of concrete included with Concrete Superstructure.

Pour steps monolithically with cap.

Quantity of concrete in end post included with Concrete Superstructure on sheet 11 of 35.

For Concrete Encasement details, see sheet 30 of 35.

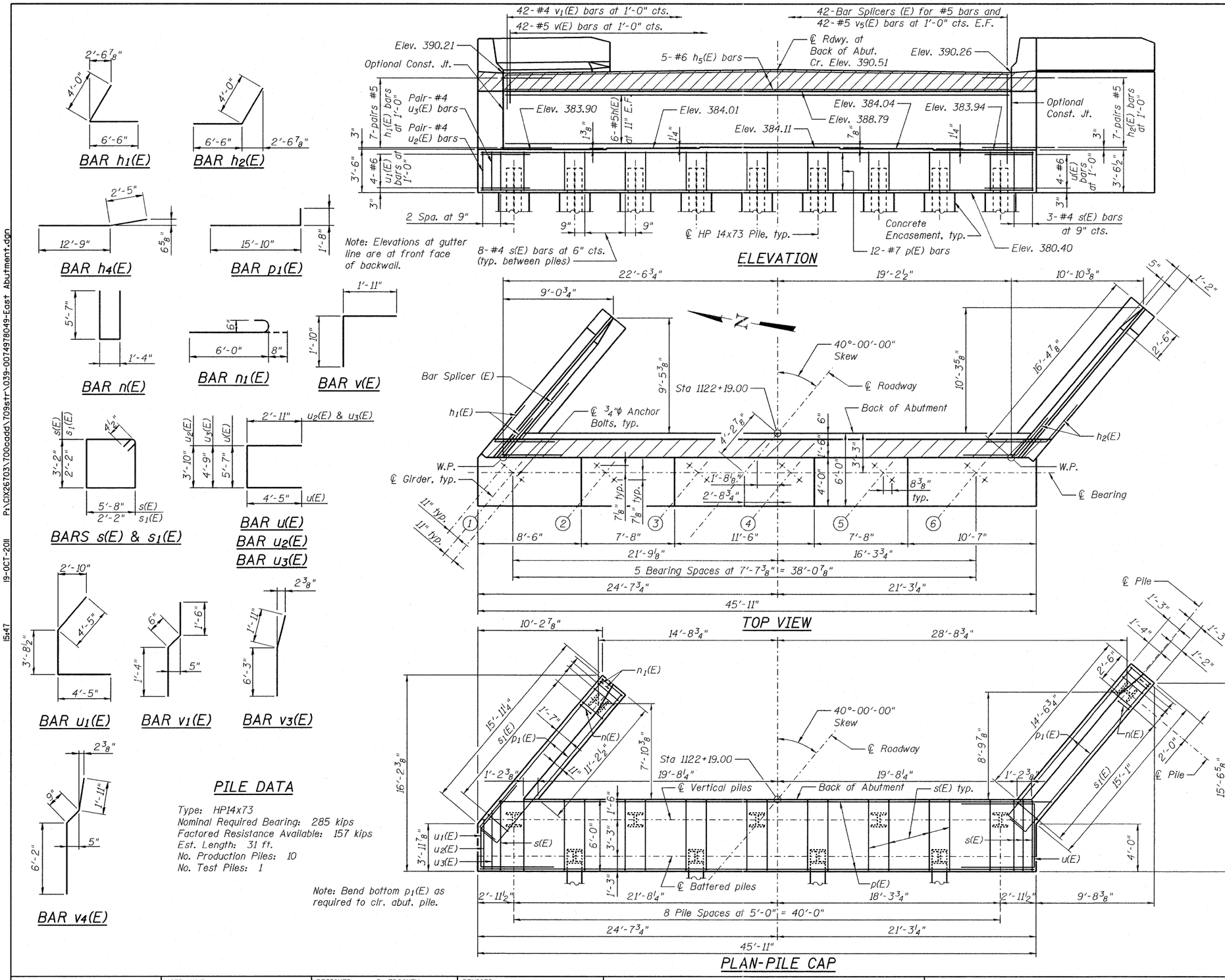

EAST ABUTMENT BILL OF MATERIAL

Bar	No.	Size	Length	Shape
h(E)	12	#5	41'-7"	
h1(E)	14	#5	10'-6"	
h2(E)	14	#5	10'-6"	
h3(E)	26	#4	15'-3"	
h4(E)	18	#4	15'-2"	
h5(E)	5	#6	41'-7"	
n(E)	26	#6	12'-6"	
n1(E)	12	#6	6'-8"	
p(E)	12	#7	45'-7"	
p1(E)	12	#7	17'-6"	
s(E)	68	#4	18'-5"	
s1(E)	32	#4	9'-5"	
u(E)	4	#6	14'-5"	
u1(E)	4	#6	12'-7"	
u2(E)	2	#4	9'-8"	
u3(E)	2	#4	10'-7"	
v(E)	42	#5	3'-9"	
v1(E)	42	#4	3'-4"	
v2(E)	32	#6	8'-10"	
v3(E)	6	#6	8'-2"	
v4(E)	26	#6	8'-10"	
v5(E)	84	#5	7'-3"	
Structure Excavation		Cu. Yd.	186	
Concrete Structures		Cu. Yd.	70.4	
Reinforcement Bars, Epoxy Coated		Pound	6,710	
Furnishing - Piles, HP14x73		Foot	310	
Driving Piles		Foot	310	
Test Pile, HP14x73		Each	1	
Pile Shoe		Each	4	
Concrete Encasement		Cu. Yd.	6.0	
Concrete Sealer		Sq. Ft.	640	

SEISMIC PILE DETAILS

Cost of 3/4"φ Studs shall be included in item "Furnishing Steel Piles, HP14x73."

PILE DATA

Type: HP14x73
Nominal Required Bearing: 285 kips
Factored Resistance Available: 157 kips
Est. Length: 31 ft.
No. Production Piles: 10
No. Test Piles: 1

Note: Bend bottom p1(E) as required to clr. abut. pile.

NOTES

Top of backwall shall conform to longitudinal grade and cross slope of roadway.

Pour steps monolithically with cap.

Space reinforcement in cap to miss anchor bolts.

Concrete Sealer should be applied to the designated areas of the abutment shown on sheet 25 of 35.

All edges shall have a standard 3/4" chamfer except as noted.

For details of Bar Splicers, see sheet 29 of 35.

For details of piles and Concrete Encasement, see sheet 30 of 35.

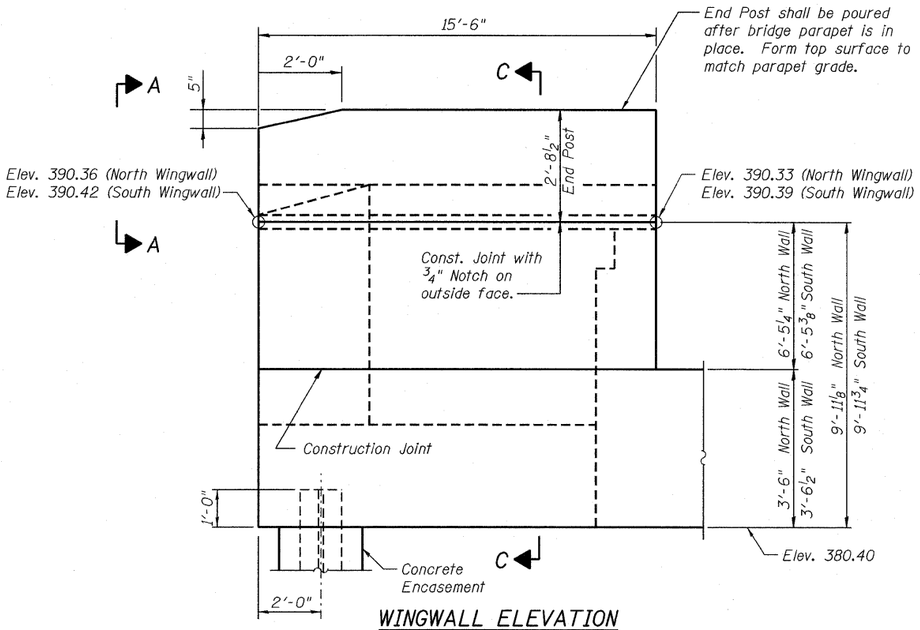

WINGWALL ELEVATION

Showing Dimensions

Note: Elevations shown are at outside face of Wingwall.

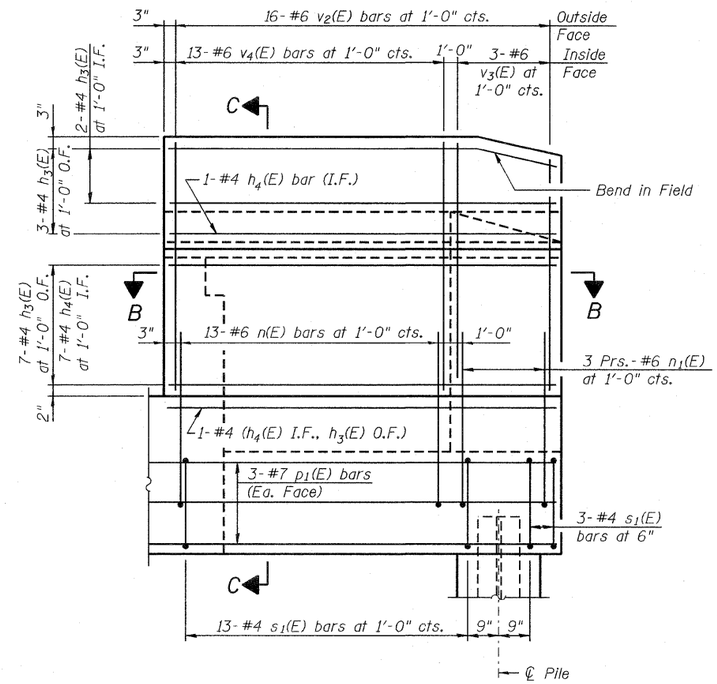

WINGWALL ELEVATION

Showing Reinforcement

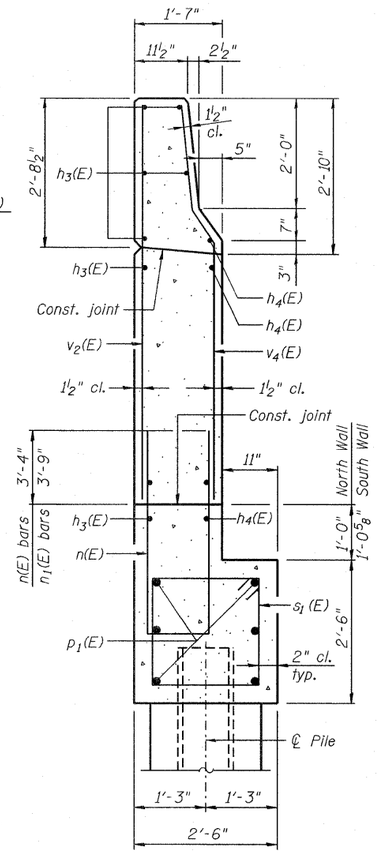

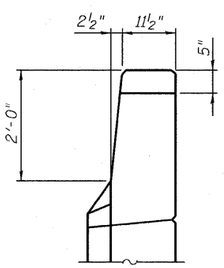

VIEW A-A

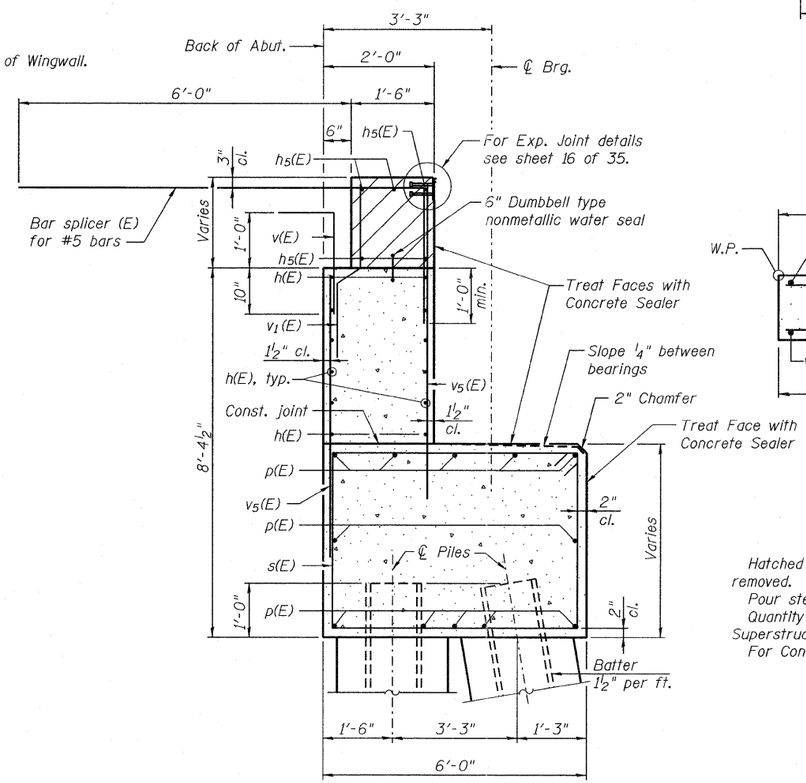

SECTION THRU ABUTMENT

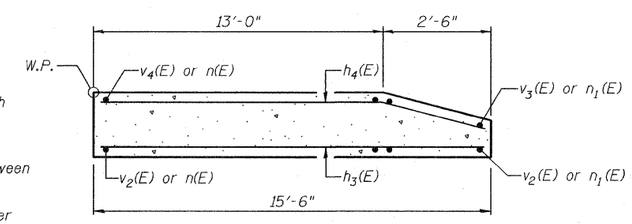

SECTION B-B

SECTION C-C

NOTES

Hatched area to be poured after superstructure false work has been removed. Quantity of concrete included with Concrete Superstructure.

Pour steps monolithically with cap.

Quantity of concrete in end post included with Concrete Superstructure on sheet 11 of 35.

For Concrete Encasement details, see sheet 30 of 35.

JACOBS	USER NAME =	DESIGNED - B. ERSCHEN	REVISED -	STATE OF ILLINOIS DEPARTMENT OF TRANSPORTATION	EAST ABUTMENT DETAILS STRUCTURE NO. 039-0074	F.A.P. RTE.	SECTION	COUNTY	TOTAL SHEETS	SHEET NO.
		CHECKED - M. CRONIN	REVISED -			686	114B-1	JACKSON	104	114
	PLOT DATE = 19-OCT-2011	DRAWN - C. SALLADE	REVISED -					CONTRACT NO. 78049		
FILE NAME=039-0074978049-East Abutment Details.dgn		CHECKED - F. CAMBA	REVISED -		SHEET NO. 25 OF 35 SHEETS			ILLINOIS FED. AID PROJECT		

15:47 19-OCT-2011 P:\CIX26703\700cadd\709str\039-0074978049-East Abutment Details.dgn

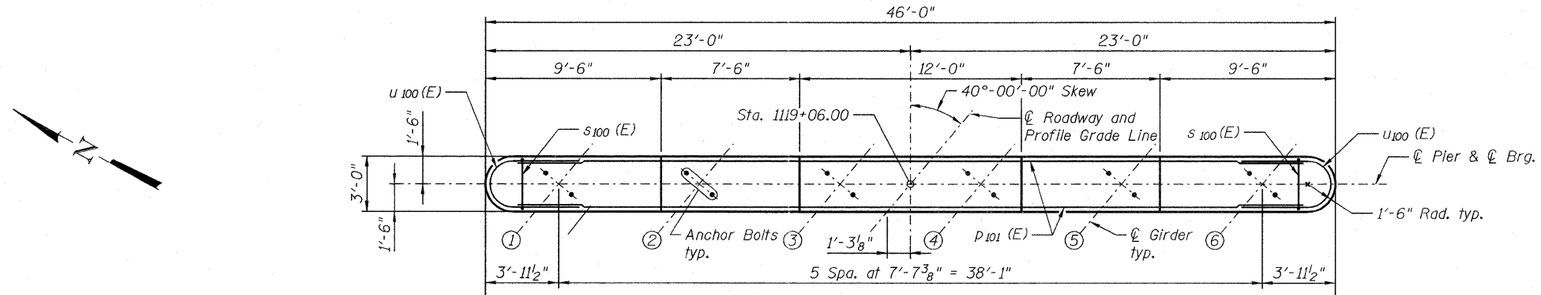

TOP PLAN

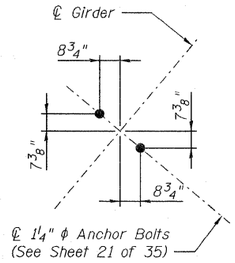

ANCHOR BOLT LAYOUT

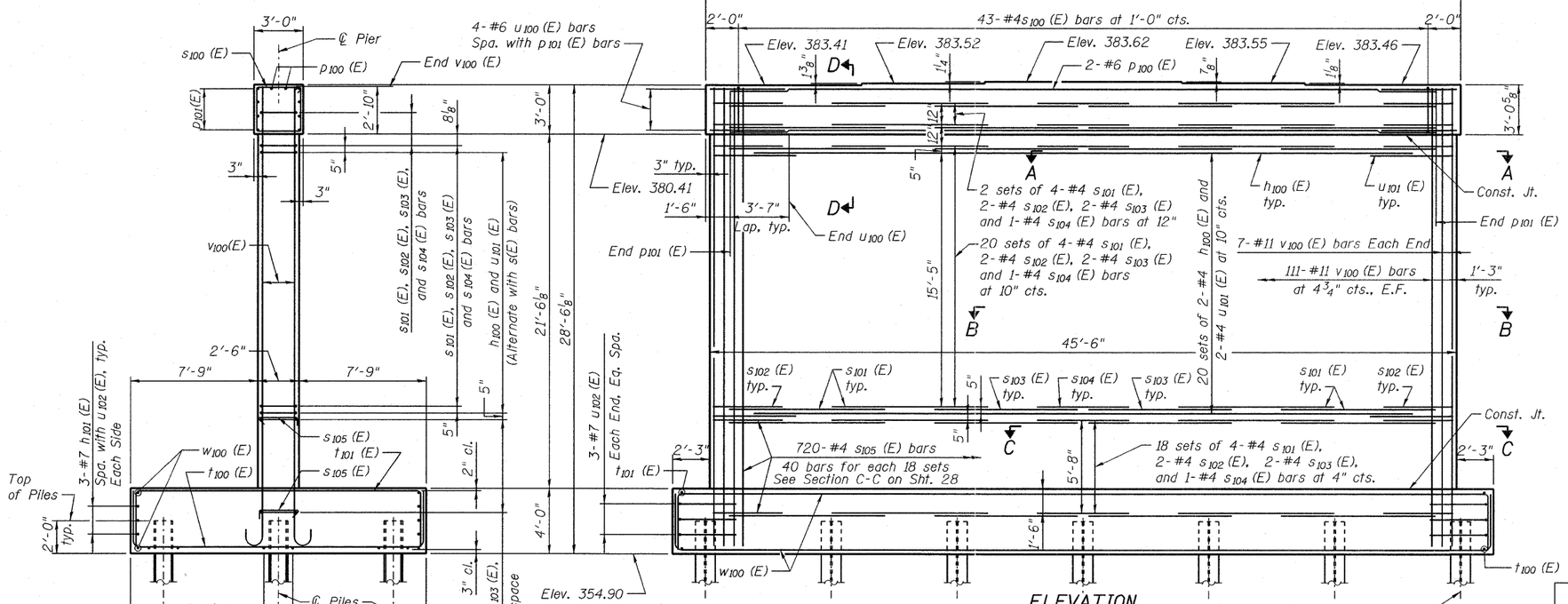

ELEVATION
(Looking Ahead Station)

END VIEW

FOOTING PLAN

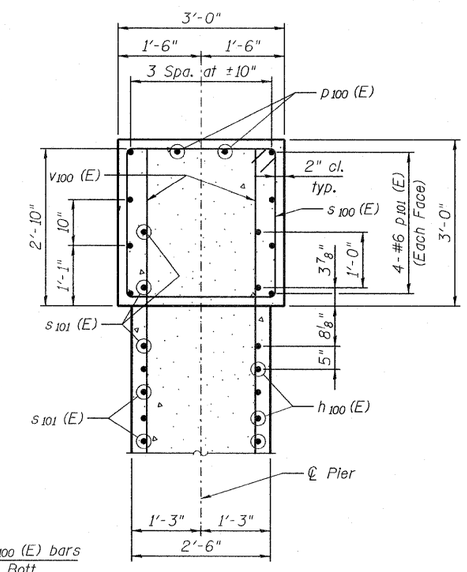

SECTION D-D

PILE DATA

Type: Steel HP14x73
Nominal Required Bearing: 509 kips
Factored Resistance Available: 280 kips
Est. Length: 49 ft
No. Production Piles: 20
No. Test Piles: 1

NOTES

All edges shall have ¾" chamfer.
Pour steps monolithically with cap.
Place reinforcement in cap to miss anchor bolts.
For details of bearings, see Sheet 21 of 35.
For details of piles, see Sheet 30 of 35.

JACOBS	USER NAME =	DESIGNED - B. ERSCHEN	REVISED -	STATE OF ILLINOIS DEPARTMENT OF TRANSPORTATION	PIER 1 PLAN AND ELEVATION STRUCTURE NO. 039-0074	F.A.P. RTE.	SECTION	COUNTY	TOTAL SHEETS / SHEET NO.
		CHECKED - N. KHATRI	REVISED -			686	114B-1	JACKSON	105 / 114
	PLOT DATE = 19-OCT-2011	DRAWN - C. SALLADE	REVISED -					CONTRACT NO. 78049	
FILE NAME=039-0074978049-Pier1.dgn		CHECKED - J. SMITH	REVISED -		SHEET NO. 26 OF 35 SHEETS			ILLINOIS FED. AID PROJECT	

P:\DIX26703\T00cadd\709str\039-0074978049-Pier1.dgn 19-OCT-2011 15:47

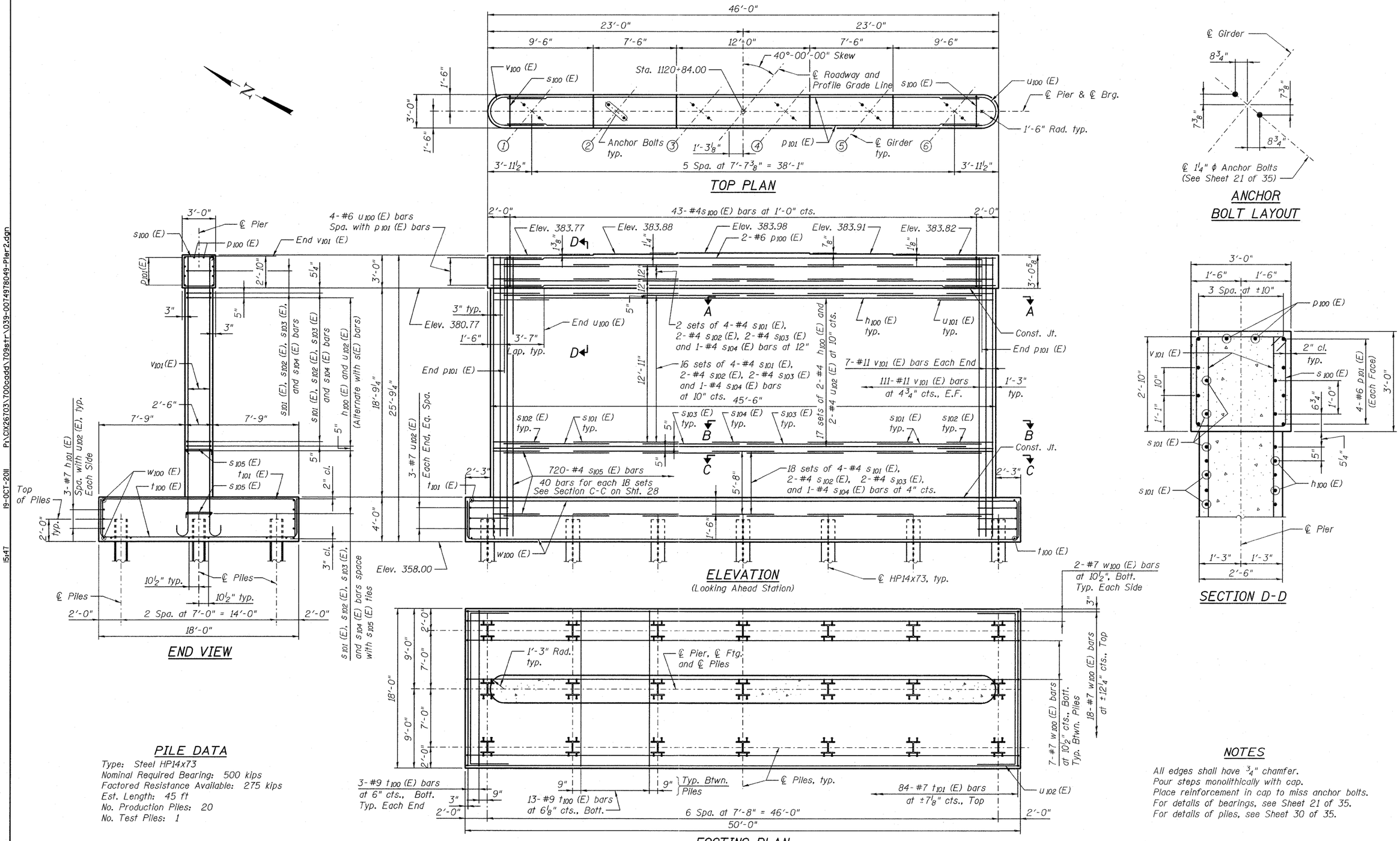

PILE DATA

Type: Steel HP14x73
Nominal Required Bearing: 500 kips
Factored Resistance Available: 275 kips
Est. Length: 45 ft
No. Production Piles: 20
No. Test Piles: 1

NOTES

All edges shall have 3/4" chamfer.
Pour steps monolithically with cap.
Place reinforcement in cap to miss anchor bolts.
For details of bearings, see Sheet 21 of 35.
For details of piles, see Sheet 30 of 35.

JACOBS	USER NAME =	DESIGNED - B. ERSCHEN	REVISED -	STATE OF ILLINOIS DEPARTMENT OF TRANSPORTATION	PIER 2 PLAN AND ELEVATION STRUCTURE NO. 039-0074	F.A.P. RTE. 686	SECTION 114B-1	COUNTY JACKSON	TOTAL SHEETS 106 / SHEET NO. 114
		CHECKED - N. KHATRI	REVISED -					CONTRACT NO. 78049	
	PLOT DATE = 19-OCT-2011	DRAWN - C. SALLADE	REVISED -						
FILE NAME=039-0074978049-Pier2.dgn		CHECKED - J. SMITH	REVISED -		SHEET NO. 27 OF 35 SHEETS			ILLINOIS FED. AID PROJECT	

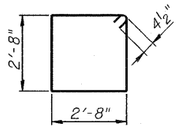

BAR s_{100} (E)

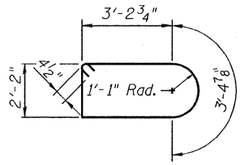

BARS s_{102} (E)

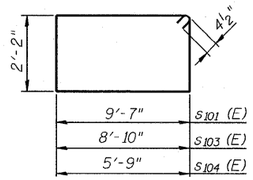

BAR s_{101} (E), s_{103} (E) & s_{104} (E)

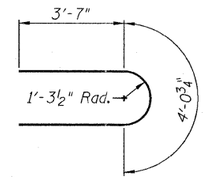

BAR u_{100} (E)

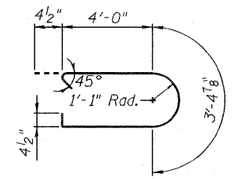

BARS u_{101} (E)

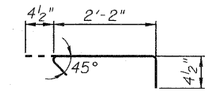

BAR s_{105} (E)

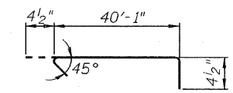

BAR h_{100} (E)

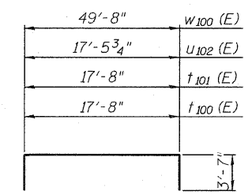

BAR t_{100} (E), t_{101} (E)
BAR u_{102} (E) & w_{100} (E)

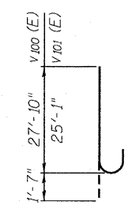

BAR v_{100} (E) & v_{101} (E)

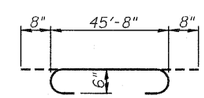

BAR p_{100} (E)

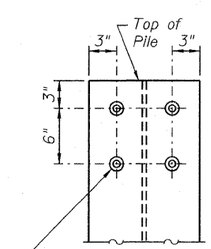

4-3/4"ϕ x 4" Granular or solid flux filled headed studs automatically end welded (Typ. each flange, each pile)

SEISMIC PILE DETAIL

Cost of ¾" ϕ studs shall be included in item "Furnishing Steel Piles, HP14x73".

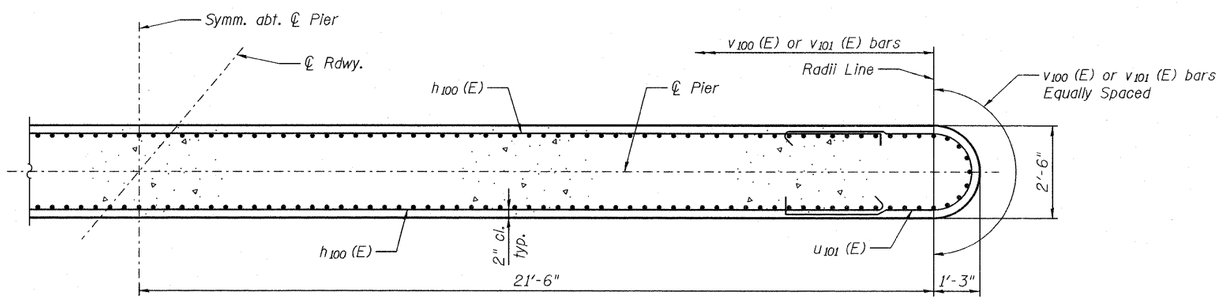

SECTION A-A

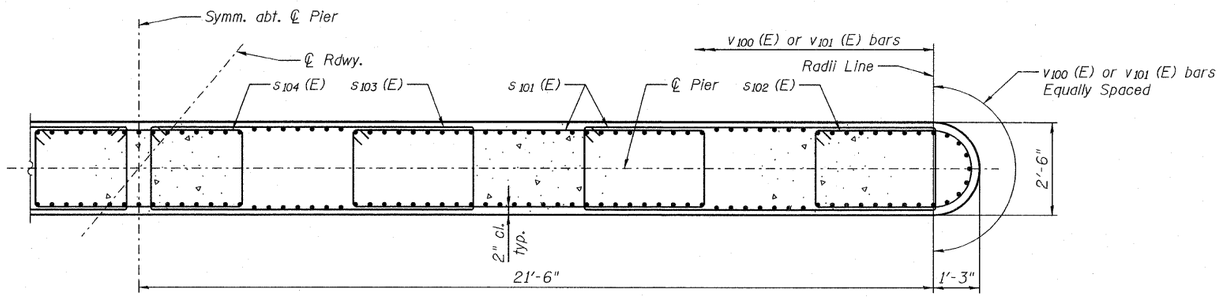

SECTION B-B

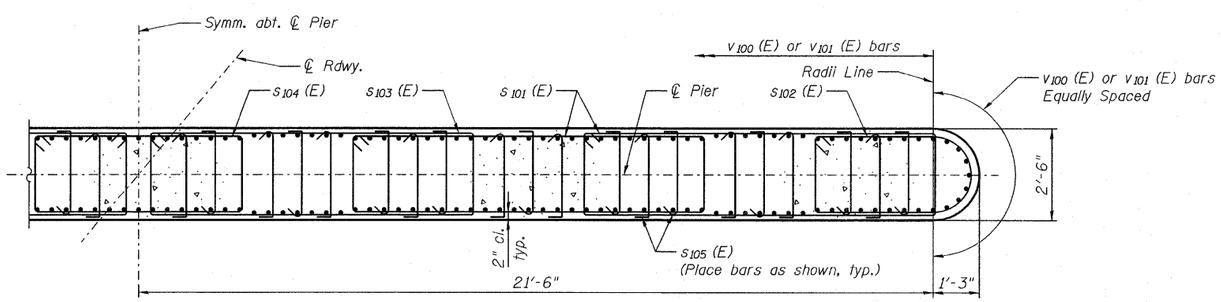

SECTION C-C

Note: Place 90° leg of s_{105} (E) bar on opposite side of pier every other layer.

PIER 1
BILL OF MATERIAL

Bar	No.	Size	Length	Shape
h_{100} (E)	40	#4	40'-10"	
h_{101} (E)	6	#7	49'-5"	
p_{100} (E)	2	#6	47'-0"	
p_{101} (E)	8	#6	43'-0"	
s_{100} (E)	43	#4	11'-5"	
s_{101} (E)	160	#4	24'-3"	
s_{102} (E)	80	#4	12'-10"	
s_{103} (E)	80	#4	22'-9"	
s_{104} (E)	40	#4	16'-7"	
s_{105} (E)	720	#4	2'-11"	
t_{100} (E)	84	#9	24'-10"	
t_{101} (E)	84	#7	24'-10"	
u_{100} (E)	8	#6	11'-3"	
u_{101} (E)	40	#4	12'-2"	
u_{102} (E)	6	#7	24'-8"	
v_{100} (E)	236	#11	29'-5"	
w_{100} (E)	36	#7	57'-0"	
Concrete Structures			Cu. Yd.	238.8
Reinforcement Bars, Epoxy Coated			Pound	62,220
Furnishing - Piles, HP14x73			Foot	980
Driving Piles			Foot	980
Test Pile, HP14x73			Each	1
Pile Shoes			Each	21

PIER 2
BILL OF MATERIAL

Bar	No.	Size	Length	Shape
h_{100} (E)	34	#4	40'-10"	
h_{101} (E)	6	#7	49'-5"	
p_{100} (E)	2	#6	47'-0"	
p_{101} (E)	8	#6	43'-0"	
s_{100} (E)	43	#4	11'-5"	
s_{101} (E)	144	#4	24'-3"	
s_{102} (E)	72	#4	12'-10"	
s_{103} (E)	72	#4	22'-9"	
s_{104} (E)	36	#4	16'-7"	
s_{105} (E)	720	#4	2'-11"	
t_{100} (E)	84	#9	24'-10"	
t_{101} (E)	84	#7	24'-10"	
u_{100} (E)	8	#6	11'-3"	
u_{101} (E)	34	#4	12'-2"	
u_{102} (E)	6	#7	24'-8"	
v_{101} (E)	236	#11	26'-8"	
w_{100} (E)	36	#7	57'-0"	
Concrete Structures			Cu. Yd.	227.3
Reinforcement Bars, Epoxy Coated			Pound	58,070
Furnishing - Piles, HP14x73			Foot	900
Driving Piles			Foot	900
Test Pile, HP14x73			Each	1
Pile Shoes			Each	21

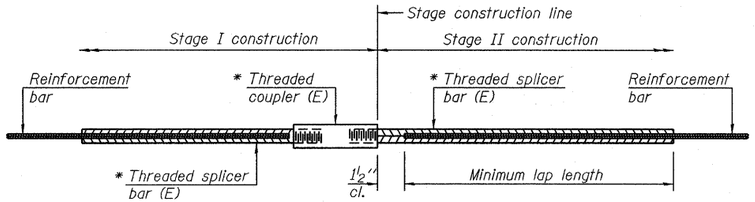

STANDARD BAR SPLICER ASSEMBLY

Minimum Lap Lengths					
Bar size to be spliced	Table 1	Table 2	Table 3	Table 4	Table 5
3, 4	1'-5"	1'-11"	2'-1"	2'-4"	2'-3"
5	1'-9"	2'-5"	2'-7"	2'-11"	2'-10"
6	2'-1"	2'-11"	3'-1"	3'-6"	3'-4"
7	2'-9"	3'-10"	4'-2"	4'-8"	4'-6"
8	3'-8"	5'-1"	5'-5"	6'-2"	5'-10"
9	4'-7"	6'-5"	6'-10"	7'-9"	7'-5"

Table 1: Black bar, 0.8 Class C
Table 2: Black bar, Top bar lap, 0.8 Class C
Table 3: Epoxy bar, 0.8 Class C
Table 4: Epoxy bar, Top bar lap, 0.8 Class C
Table 5: Epoxy bar, Top bar lap, Class B

Threaded splicer bar length = min. lap length + 1½" + thread length

* Epoxy not required on Bar Splicer Assembly components used in conjunction with black bars.

Location	Bar size	No. assemblies required	Table for minimum lap length

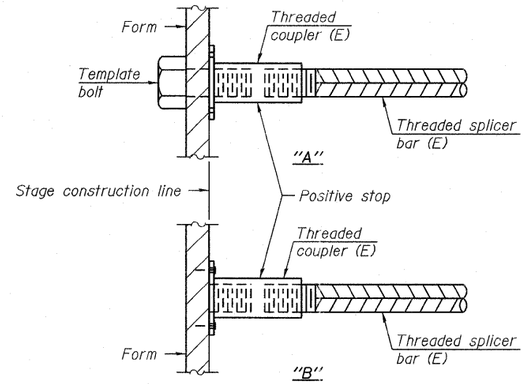

INSTALLATION AND SETTING METHODS

"A" : Set bar splicer assembly by means of a template bolt.
"B" : Set bar splicer assembly by nailing to wood forms or cementing to steel forms.
(E) : Indicates epoxy coating.

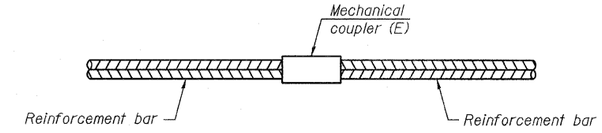

STANDARD MECHANICAL SPLICER

Location	Bar size	No. assemblies required

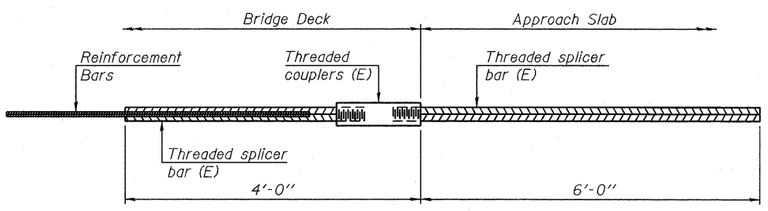

BAR SPLICER ASSEMBLY FOR #5 BAR ON INTEGRAL OR SEMI-INTEGRAL ABUTMENTS

No. required =

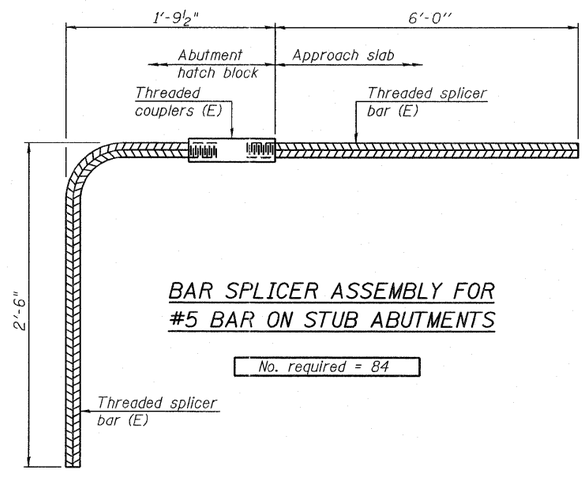

BAR SPLICER ASSEMBLY FOR #5 BAR ON STUB ABUTMENTS

No. required = 84

NOTES

Splicer bars shall be deformed with threaded ends and have a minimum 60 ksi yield strength.
All reinforcement shall be lapped and tied to the splicer bars.
Bar splicer assemblies shall be epoxy coated according to the requirements for reinforcement bars. See Section 508 of the Standard Specifications.

See approved list of bar splicer assemblies and mechanical splicers for alternatives.

BSD-1 7-1-10

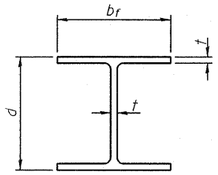

STEEL PILE TABLE

Designation	Depth d	Flange width b_f	Web and Flange thickness t	Encasement diameter A
HP 14x117	14 1/4"	14 7/8"	13/16"	30"
x102	14"	14 3/4"	11/16"	30"
x89	13 7/8"	14 3/4"	5/8"	30"
x73	13 5/8"	14 5/8"	1/2"	30"
HP 12x84	12 1/4"	12 1/4"	11/16"	24"
x74	12 1/8"	12 1/4"	5/8"	24"
x63	12"	12 1/8"	1/2"	24"
x53	11 3/4"	12"	7/16"	24"
HP 10x57	10"	10 1/4"	9/16"	24"
x42	9 3/4"	10 1/8"	7/16"	24"
HP 8x36	8"	8 1/8"	7/16"	18"

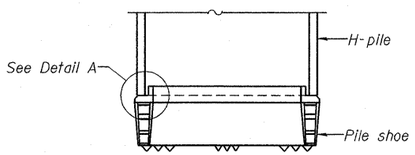

ELEVATION

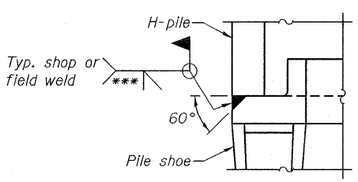

DETAIL A

H-PILE SHOE ATTACHMENT

H-Pile Shoe Attachment required at Pier 1, Pier 2 and Battered Piles on East Abutment. (46 Req'd.)

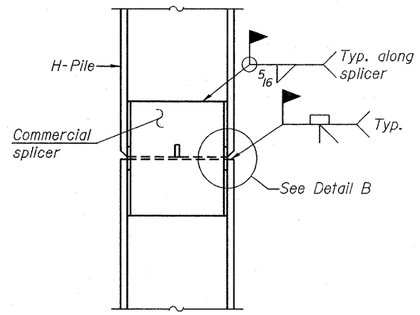

ELEVATION

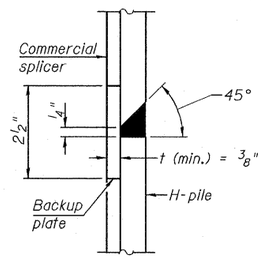

DETAIL "B"

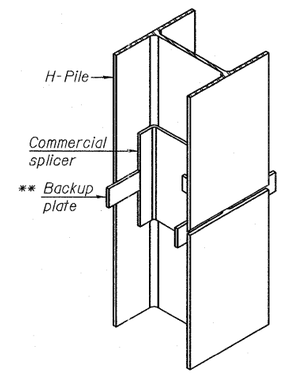

ISOMETRIC VIEW

WELDED COMMERCIAL SPLICE

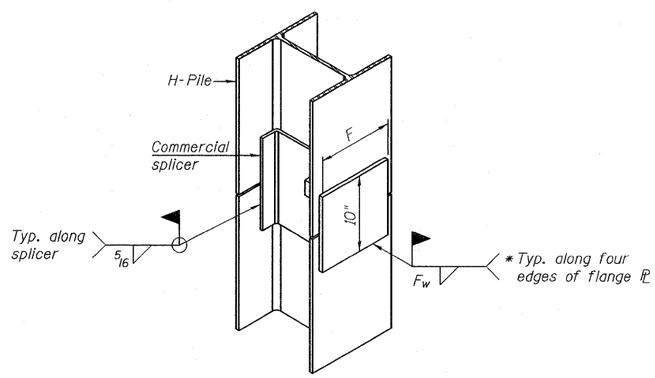

ISOMETRIC VIEW

WELDED COMMERCIAL SPLICE ALTERNATE

* Interrupt welds 1/4" from end of web and/or each flange.

** Remove portions of backup plates that extend outside the flanges.

*** Weld size per pile shoe manufacturer (5/16" min.).

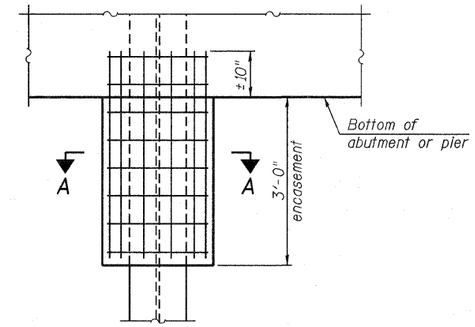

ELEVATION

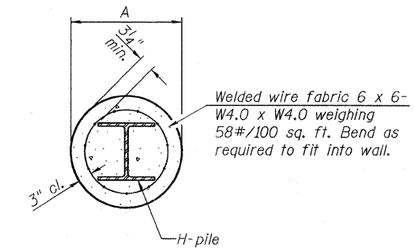

Note:
Forms for encasement may be omitted when soil conditions permit.

SECTION A-A

PILE ENCASEMENT

Pile Encasement required at West and East Abutments (22 Req'd.)

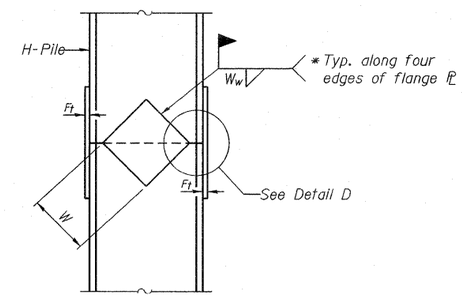

ELEVATION

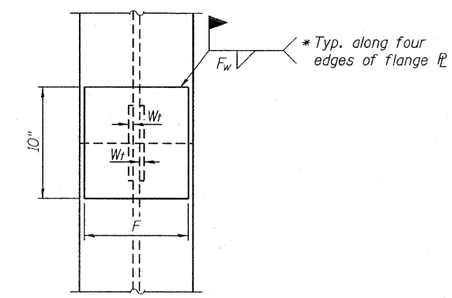

END VIEW

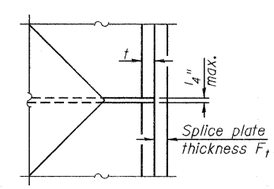

DETAIL D

Designation	F	F_t	F_w	W	W_t	W_w
HP 14x117	12 1/2"	1"	7/8"	7 3/4"	5/8"	1/2"
x102	12 1/2"	7/8"	3/4"	7 3/4"	5/8"	1/2"
x89	12 1/2"	3/4"	11/16"	7 3/4"	5/8"	1/2"
x73	12 1/2"	5/8"	9/16"	7 3/4"	5/8"	1/2"
HP 12x84	10"	7/8"	11/16"	6 1/2"	5/8"	1/2"
x74	10"	7/8"	11/16"	6 1/2"	5/8"	1/2"
x63	10"	5/8"	1/2"	6 1/2"	1/2"	3/8"
x53	10"	5/8"	1/2"	6 1/2"	1/2"	3/8"
HP 10x57	8"	3/4"	9/16"	5 1/4"	1/2"	3/8"
x42	8"	5/8"	9/16"	5 1/4"	1/2"	3/8"
HP 8x36	7"	5/8"	7/16"	4 1/4"	1/2"	3/8"

WELDED PLATE FIELD SPLICE

Note:
The steel H-piles shall be according to AASHTO M270 Grade 50.

F-HP 7-1-10

JACOBS	USER NAME =	DESIGNED -	REVISED -	STATE OF ILLINOIS DEPARTMENT OF TRANSPORTATION	HP PILE DETAILS STRUCTURE NO. 039-0074	F.A.P. RTE.	SECTION	COUNTY	TOTAL SHEETS	SHEET NO.
		CHECKED -	REVISED -			686	114B-1	JACKSON	109	114
	PLOT DATE = 19-OCT-2011	DRAWN - C. SALLADE	REVISED -					CONTRACT NO. 78049		
FILE NAME=039-0074978049-Pile Details.dgn		CHECKED - B. ERSCHEN	REVISED -		SHEET NO. 30 OF 35 SHEETS			ILLINOIS FED. AID PROJECT		

19-OCT-2011 15:48 P:\CIX26703\T00cadd\709str\039-0074978049-Pile Details.dgn

ILLINOIS DEPARTMENT OF TRANSPORTATION
District Nine Materials

Bridge Foundation
Boring Log

FA Rte 686 (IL 4) Over Beaucoup Creek

Sheet 1 of 2

Route: Rte 686 (IL Structure Number: 039-0042 Date: 10/6/2008
Section 115B, 115B-BR Bored By: Rich Moberly
County: Jackson Location: 0.5 mi West of IL Rte 13/127 Checked By: Rob Graeff

Boring No 1-S (2008)
Station 1117+57
Offset 10' Lt CL
Ground Surface 386.0 Ft

Surf Wat Elev: 355.1
Ground Water Elevation
when Drilling 320
At Completion
At: Hrs:

Description	Depth	Blows	Qu tsf	W%
Asphalt and Crushed Aggregate				
384.0				
Stiff, moist, brown and grey, Clay to Silty Clay A7-6		2		
		2	1.1B	36
		3		
	5.0	1		
		2	1.2B	37
		3		
379.0				
Stiff, moist to very moist, grey, Clay A7-6		1		
		2	1.1S	35
		3		
376.5				
Medium, very moist, grey, Clay A7-6	10.0	1		
		1	0.6B	42
		1		
374.0				
Stiff, moist, grey, Clay A7-6		1		
		2	1.2B	36
		2		
	15.0	1		
		2	1.5B	36
		3		
369.0				
Stiff, moist, grey, Silty Clay A-6		1		
		2	1.9B	22
		3		
	20.0	1		
		4	1.7B	23
		4		
		1		
		2	1.2B	25
		4		
361.0	25.0	1		

Description	Depth	Blows	Qu tsf	W%
Stiff, moist, grey, Silty Clay to Clay A7-6		4	1.5B	23
		4		
		1		
		2	1.0B	24
		3		
356.5				
Medium, very moist, brown mottled grey, Silty Clay A-6	30.0	1		
		2	0.6B	26
		2		
	35.0	1		
		2	0.5B	26
		2		
		WH		
		1	0.6B	23
		2		
346.5				
Stiff, moist, brown, Clay A7-6	40.0	2		
		3	1.8B	21
		3		
341.5				
Very stiff, moist, grey and brown, Clay A7-6	45.0	2		
		4	2.5B	16
		8		
	50.0	2		

N-Std Pentr Test: 2" OD Sampler,
140# Hammer, 30" Fall (Type Fail. B-Bulge S-Shear E-Estimated P-Penetrometer)

Sheet 2 of 2

Route: Rte 686 (IL 4) Date: 10/6/2008
Section: 115B, 115B-BR
County: Jackson

Boring No: 1-S (2008)
Station: 1117+57
Offset: 10' Lt CL
Ground Surface: 386.0 Ft

Description	Depth	Blows	Qu tsf	W%
Very stiff, moist, grey and brown, Clay A7-6		6	2.9B	17
		8		
	55.0	2		
		7	2.1B	17
		9		
	60.0	1		
		4	2.7B	19
		8		
	65.0	3		
		10	3.1B	18
		14		
316.5				
Very loose, wet, grey, fine Silty Sand 84% Sand 9% Silt 7% Clay	70.0	WR		
		WH		26
		WH		
312.5				
Medium, moist, grey, fine Sand		Washed 3'		
	75.0	6		

Description	Depth	Blows	Qu tsf	W%
Medium, moist, grey, fine Sand 79% Sand 16% Silt 5% Clay		11		21
		16		
			Washed 1'	
	80.0	4		
		9		
		10		
	85.0			
297.0				
Hard, damp, grey, Clay Shale			Washed 1'	
296.0	90.0	100/6"		
Bottom of hole = 90.0 feet				
Free water observed at 66.0 ft				
Elevation referenced to BM @ NE wingwall = 384.3 feet				
To convert "N" values to "N60" values multiply by 1.25	95.0			
	100.0			

N-Std Pentr Test: 2" OD Sampler,
140# Hammer, 30" Fall (Type Fail. B-Bulge S-Shear E-Estimated P-Penetrometer)

BORING 1-S

ILLINOIS DEPARTMENT OF TRANSPORTATION
District Nine Materials

Bridge Foundation
Boring Log
Sheet 1 of 2

FA Rte 686 (IL 4) Over Beaucoup Creek

Route: A Rte 686 (IL Structure Number: 039-0042 Date: 9/29/2008
Section 115B, 115B-BR Bored By: Rich Moberly
County: Jackson Location: 0.5 mi West of IL Rte 13/127 Checked By: Rob Graeff

Boring No 2-S (2008)
Station 1119+11
Offset 35' Rt CL
Ground Surface 366.9 Ft

Surf Wat Elev: 356.4
Ground Water Elevation when Drilling 349.4
At Completion
At: 72 Hrs: 364.8

Description	Depth	Blows	Qu tsf	W%
Very stiff, moist, brown, Silt Loam to Silty Clay Loam A-4				
		1		
		5	2.1S	32
		6		
	362.4			
Medium to stiff, very moist, brown Silty Clay Loam A-4	5.0	1		
		3	1.0B	24
		3		
		1		
		1	0.6B	28
		2		
	357.4			
Soft, very moist, brown mottled grey, Silty Clay A-6	10.0	1		
		1	0.3B	33
		1		
	354.9			
Very soft, wet, brown mottled grey, Silty Clay A-6		WH		
		WH	0.1B	32
		WH		
	352.4			
Medium to soft, very moist, brown mottled grey, Silty Clay A-6	15.0	WH		
		WH	0.5B	29
		WH		
	349.9			
Very soft, wet, grey mottled brown, Silty Clay A-6		WH		
		WH	0.2B	31
		WH		
	347.4			
Medium, very moist, grey mottled brown, Clay A7-6	20.0	WH		
		2	0.9B	22
		2		
	344.9			
Very stiff, moist, grey mottled brown, Clay A7-6		1		
		4	2.1B	17
		5		
	25.0	1		

Description	Depth	Blows	Qu tsf	W%
Very stiff, moist, grey mottled brown, Clay A7-6		4	2.1B	18
		6		
	339.9			
Very stiff, moist, grey, Clay A7-6		1		
		4	2.1B	18
		5		
	30.0	1		
		4	2.1B	18
		6		
	332.4			
Stiff, moist, grey, Clay A7-6	35.0	1		
		4	1.6B	19
		6		
	329.9			
Very stiff, moist, grey, Silty Clay A-6		1		
		4	2.1B	18
		6		
	327.4			
Stiff, moist, grey, Clay A7-6	40.0	1		
		3	1.6B	19
		4		
	322.4			
Hard, moist, grey, Clay A7-6	45.0	1		
		5	4.1B	17
		10		
	316.9	50.0	1	

N-Std Pentr Test: 2" OD Sampler,
140# Hammer, 30" Fall (Type Fail. B-Bulge S-Shear E-Estimated P-Penetrometer)

Sheet 2 of 2

Route: A Rte 686 (IL 4) Date: 9/29/2008
Section: 115B, 115B-BR
County: Jackscn

Boring No: 2-S (2008)
Station: 1119+11
Offset: 35' Rt CL
Ground Surface: 366.9 Ft

Description	Depth	Blows	Qu tsf	W%
Medium, very moist, grey, fine Sand with Clay layers 70% Sand 16% Silt 14% Clay		5		19
		10		
			Washed 3'	
	55.0	4		
		7		
		9		
			Washed 1'	
	307.4			
Medium, very moist, grey, fine Sand with Silt layers 48% Sand 40% Silt 12% Clay	60.0	4		
		6		23
		10		
			Washed 1'	
	65.0	3		
		4		
		10		
			Washed 1'	
	296.9	70.0	12	
Hard, damp, grey, Clay Shale		100/8"		
	75.0	100/2"		

Description	Depth	Blows	Qu tsf	W%
Hard, damp, grey, Clay Shale				
	286.9	80.0	100/2"	
Bottom of hole = 79.7 feet				
Free water observed at 17.5 feet				
Elevation referenced to BM @ NE wingwall = 384.3 feet				
To convert "N" values to "N60" values multiply by 1.25	85.0			
	90.0			
	95.0			
	100.0			

N-Std Pentr Test: 2" OD Sampler,
140# Hammer, 30" Fall (Type Fail. B-Bulge S-Shear E-Estimated P-Penetrometer)

BORING 2-S

ILLINOIS DEPARTMENT OF TRANSPORTATION
District Nine Materials

Bridge Foundation
Boring Log
Sheet 1 of 2

FA Rte 686 (IL 4) Over Beaucoup Creek

Route: FA Rte 686 (IL Structure Number: 039-0042 Date: 10/1/2008
Section 115B, 115B-BR Bored By: Rich Moberly
County: Jackson Location: 0.5 mi West of IL Rte 13/127 Checked By: Rob Graeff

Boring No 3-S (2008)
Station 1120+32
Offset 27' Lt CL
Ground Surface 367.2 Ft

Surf Wat Elev: 356.4
Ground Water Elevation when Drilling 345.2
At Completion
At: 48 Hrs: 359.2

	DEPTH	BLOWS	Qu tsf	W%
Stiff, moist, brown and grey, Silty Clay Loam A-6				
		1		
		5	1.2S	18
		4		
	362.7			
Medium to stiff, very moist, grey, Silty Clay A-6	5.0	1		
		2	1.0B	27
		2		
	360.2			
Medium to soft, very moist, grey, Clay to Silty Clay A7-6		WH		
		1	0.5B	31
		2		
	10.0	WH		
		1	0.4B	34
		1		
		WH		
		1	0.6B	32
		2		
	15.0	WH		
		1	0.5B	31
		1		
	350.2			
Very soft, wet, grey, Silty Clay A7-6		WH		
		1	0.2B	32
		1		
	347.7			
Medium, very moist, grey mottled brown, Silty Clay A7-6	20.0	WH		
		1	0.5B	29
		2		
	345.2			
Medium, very moist, grey, Clay A7-6		WH		
		1	0.6B	36
		1		
	342.7			
	25.0	1		

	DEPTH	BLOWS	Qu tsf	W%
Stiff, moist, grey, Clay A7-6		3	1.5B	18
		4		
	340.2			
Very stiff, moist, brown mottled grey, Clay to Clay Loam A7-6		2		
		7	3.1B	17
		8		
	337.7			
Stiff to very stiff, moist, grey, Clay A7-6	30.0	1		
		5	1.9B	22
		6		
		1		
		4	2.1B	18
		6		
	35.0	1		
		3	1.5B	18
		5		
		1		
		3	1.6B	18
		5		
	40.0	1		
		3	1.5B	17
		5		
	45.0	2		
		9	2.9B	17
		11		
	50.0	1		

N-Std Pentr Test: 2" OD Sampler,
140# Hammer, 30" Fall (Type Fail. B-Bulge S-Shear E-Estimated P-Penetrometer)

Sheet 2 of 2

Route: FA Rte 686 (IL 4) Date: 10/1/2008
Section: 115B, 115B-BR
County: Jackson

Boring No: 3-S (2008)
Station: 1120+32
Offset: 27' Lt CL
Ground Surface: 367.2 Ft

	DEPTH	BLOWS	Qu tsf	W%
Stiff to very stiff, moist, grey, Clay A7-6		5	2.1B	16
		8		
	312.7	Washed 1'		
Very stiff, moist, grey, Silty Clay Loam to Clay Loam A-4 w/ sand seams	55.0	5		
		8	2.9S	17
		11		
	307.7	Washed 1'		
Stiff, moist, grey, Silty Clay Loam to Clay Loam A-4 w/ sand seams	60.0	3		
		3	1.1B	20
		3		
	302.7	Washed 1'		
Medium, very moist, grey, medium Sand with some Gravel and Clay 71% Sand 10% Silt 3% Clay 16% Gravel	65.0	5		
		6		20
		6		
	297.2	Washed 1'		
Hard, damp, grey, Clay Shale	70.0	3		
	296.2	100/8"		
Bottom of hole = 70.7 feet	75.0			

Bottom of hole = 70.7 feet

Free water observed at 22.0 ft

Elevation referenced to BM @ NE wingwall = 384.3 feet

To convert "N" values to "N60" values multiply by 1.25

	DEPTH	BLOWS	Qu tsf	W%
	80.0			
	85.0			
	90.0			
	95.0			
	100.0			

N-Std Pentr Test: 2" OD Sampler,
140# Hammer, 30" Fall (Type Fail. B-Bulge S-Shear E-Estimated P-Penetrometer)

BORING 3-S

ILLINOIS DEPARTMENT OF TRANSPORTATION
District Nine Materials

Bridge Foundation
Boring Log
Sheet 1 of 2

FA Rte 686 (IL 4) Over Beaucoup Creek

Route: A Rte 686 (IL Structure Number: 039-0042 Date: 10/2/2008
Section 115B, 115B-BR Bored By: Rich Moberly
County: Jackson Location: 0.5 mi West of IL Rte 13/127 Checked By: Rob Graeff

Boring No 4-S (2008)
Station 1121+43
Offset 24' Rt CL
Ground Surface 371.3 Ft

Surf Wat Elev: 356.4
Ground Water Elevation
when Drilling 331.3
At Completion
At: 24 Hrs: 366.8

Description	Elev.	Depth	Blows	Qu tsf	W%
Stiff, damp, brown mottled grey, Silty Clay Loam to Silt Loam A-4	366.8		2 4 5	1.5P	14
Very stiff, moist, brown mottled grey, Clay to Silty Clay A7-6	364.3	5.0	1 4 5	2.3B	21
Stiff, moist, brown mottled grey, Silty Clay A7-6	361.8		1 4 5	1.9B	23
Very stiff, moist, brown mottled grey, Clay to Silty Clay A7-6	359.3	10.0	1 4 4	2.1B	22
Stiff, moist, grey mottled brown, Silty Clay A7-6	356.8		1 3 5	1.5B	24
Very stiff, moist, brown mottled grey, Clay A7-6	351.8	15.0	1 4 6 1 4 6	2.3B 2.1B	17 17
Stiff, moist, brown mottled grey, Clay A7-6	346.3	20.0	1 4 5 1 4 5	1.8B 1.8B	18 17
		25.0	2		
Very stiff, moist, brown, Clay A7-6	339.3	30.0	5 6	2.5B	16
			2 5 7	2.7B	16
			2 6 8	3.1B	16
Very stiff, moist, grey, Clay A7-6	331.8	35.0	1 5 7	2.3B	16
			1 5 7	2.1B	16
			2 6 8	2.9B	18
Stiff, moist, grey, Clay A7-6	321.3	40.0	1 6 6	1.6B	17
		45.0	3 7 6	1.5B	17
		50.0	3		

N-Std Pentr Test: 2" OD Sampler,
140# Hammer, 30" Fall (Type Fail. B-Bulge S-Shear E-Estimated P-Penetrometer)

Sheet 2 of 2

Route: A Rte 686 (IL 4) Date: 10/2/2008
Section: 115B, 115B-BR
County: Jackson

Boring No: 4-S (2008)
Station: 1121+43
Offset: 24' Rt CL
Ground Surface: 371.3 Ft

Description	Elev.	Depth	Blows	Qu tsf	W%
Very stiff, damp to moist, grey, Clay Loam to Silty Clay Loam A-6	316.8		14 21	2.6S	14
Loose, very moist, grey, fine Silty Sand 77% Sand 14% Silt 9% Clay	311.8	55.0	WH 1 4		21
			Washed 3'		
Dense, moist, grey, fine Silty Sand 77% Sand 14% Silt 9% Clay	306.8	60.0	8 20 23		
			Washed 2'		
Medium, moist, grey, fine Silty Sand 77% Sand 14% Silt 9% Clay	297.3	65.0	5 10 15		
			Washed 1'		
Hard, damp, grey, weathered Clay Shale		70.0	3 7 12		
		75.0	3		
Weathered Clay Shale	295.8		22 100/6"		
Hard, dry, grey, Clay Shale	286.3	80.0	100/2"		
		85.0	100/1"		
		90.0			
		95.0			
		100.0			

Bottom of hole = 84.6 feet

Free water observed at 40.0 feet

Elevation referenced to BM @ NE wingwall = 384.3 feet

To convert "N" values to "N60" values multiply by 1.25

N-Std Pentr Test: 2" OD Sampler,
140# Hammer, 30" Fall (Type Fail. B-Bulge S-Shear E-Estimated P-Penetrometer)

BORING 4-S

P:\CIX26703\700cadd\709str\039-0074978049-Boring Log4.dgn 19-OCT-2011 15:48

ILLINOIS DEPARTMENT OF TRANSPORTATION
District Nine Materials

Bridge Foundation
Boring Log

FA Rte 686 (IL 4) Over Beaucoup Creek

Sheet 1 of 2

Route: FA Rte 686 (IL Structure Number: 039-0042 Date: 10/3/2008
Section: 115B, 115B-BR Bored By: Rich Moberly
County: Jackson Location: 0.5 mi West of IL Rte 13/127 Checked By: Rob Graeff

Boring No 5-S (2008)
Station 1122+15
Offset 32' Lt CL
Ground Surface 383.5 Ft

Surf Wat Elev: 355.1
Ground Water Elevation when Drilling 363.5
At Completion
At: Hrs:

Description	DEPTH	BLOWS	Qu tsf	W%
Hard, damp, brown and grey, Silty Clay A-6		2		
These break lines are correct. The rig is elevated; 1st sample is 1.5 to 3.0		6	4.5S	14
		8		
	379.5			
Very stiff, moist, grey and brown, Silty Clay to Clay A7-6		1		
	5.0	4	2.1B	22
		5		
	377.0			
Medium, very moist, grey, Clay A7-6		1		
		2	0.9B	41
		3		
	374.5			
Very stiff, moist, grey, Clay A7-6		1		
	10.0	3	2.3B	33
		4		
		1		
		4	2.1B	29
		4		
	369.5			
Stiff, moist, grey mottled brown, Clay A7-6		1		
	15.0	3	1.7S	35
		4		
		1		
		4	2.1B	26
		5		
	364.0			
Soft, very moist, brown mottled grey, Silt Loam A-4		1		
	20.0	4	0.3B	26
		4		
		1		
		3	0.3B	28
		3		
	359.5			
Medium to stiff, very moist, brown, Silty Clay Loam A-6		1		
	25.0	2	1.0B	24

Description	DEPTH	BLOWS	Qu tsf	W%
Medium to stiff, very moist, brown, Silty Clay Loam A-6		3		
		1		
		3	1.1B	18
		4		
	354.5			
Very stiff, moist, brown, Clay to Silty Clay A7-6		1		
	30.0	4	2.1B	17
		5		
		2		
		5	2.3B	16
		6		
	347.0			
Very stiff, damp to moist, brown, Clay A7-6		2		
		6	2.7B	16
		8		
		1		
	40.0	5	3.1B	16
		8		
		2		
	45.0	8	3.1B	16
		11		
		2		
	50.0	8	3.3B	17

N-Std Pentr Test: 2" OD Sampler,
140# Hammer, 30" Fall (Type Fail. B-Bulge S-Shear E-Estimated P-Penetrometer)

Sheet 2 of 2

Route: FA Rte 686 (IL 4) Date: 10/3/2008
Section: 115B, 115B-BR
County: Jackson

Boring No: 5-S (2008)
Station: 1122+15
Offset: 32' Lt CL
Ground Surface: 383.5 Ft

Description	DEPTH	BLOWS	Qu tsf	W%
Very stiff, damp to moist, brown, Clay A7-6		10		
		2		
	55.0	7	2.5B	22
		9		
	324.5			
Stiff, moist, grey, Clay A7-6		2		
	60.0	5	1.6B	19
		5		
3' blow-in	319.5			
Loose, wet, grey, fine Silty Sand		WH		
	65.0	WH		
		4		
	317.5			
Very dense, moist, grey, Silty Sand with some Gravel 72% Sand 11% Silt 12% Clay 5% Gravel		Washed 2'		
		9		
	70.0	33		22
		35		
	309.5	Washed 3'		
Medium, moist, grey, fine Sand with Clay layers		6		
	75.0	14		

Description	DEPTH	BLOWS	Qu tsf	W%
Medium, moist, grey, fine Sand with Clay layers 80% Sand 16% Silt 4% Clay		14		
	304.5	Washed 1'		
Very dense, moist, grey, fine Sand 80% Sand 16% Silt 4% Clay		14		
	80.0	30		23
		35		
	294.5	Washed 1'		
Medium, very moist, grey and black, fine Sand with Coal pieces		4		
	90.0	9		
		14		
	290.5			
Hard, damp, grey, weathered Clay Shale	289.5			
Hard, dry, grey, Clay Shale	289.0	100/3"		
	95.0			
Bottom of hole 94.3 feet				
Free water observed at 20.0 ft				
Elevation referenced to BM @ NE wingwall = 384.3 feet				
To convert "N" values to "N60" values multiply by 1.25				
	100.0			

N-Std Pentr Test: 2" OD Sampler,
140# Hammer, 30" Fall (Type Fail. B-Bulge S-Shear E-Estimated P-Penetrometer)

BORING 5-S