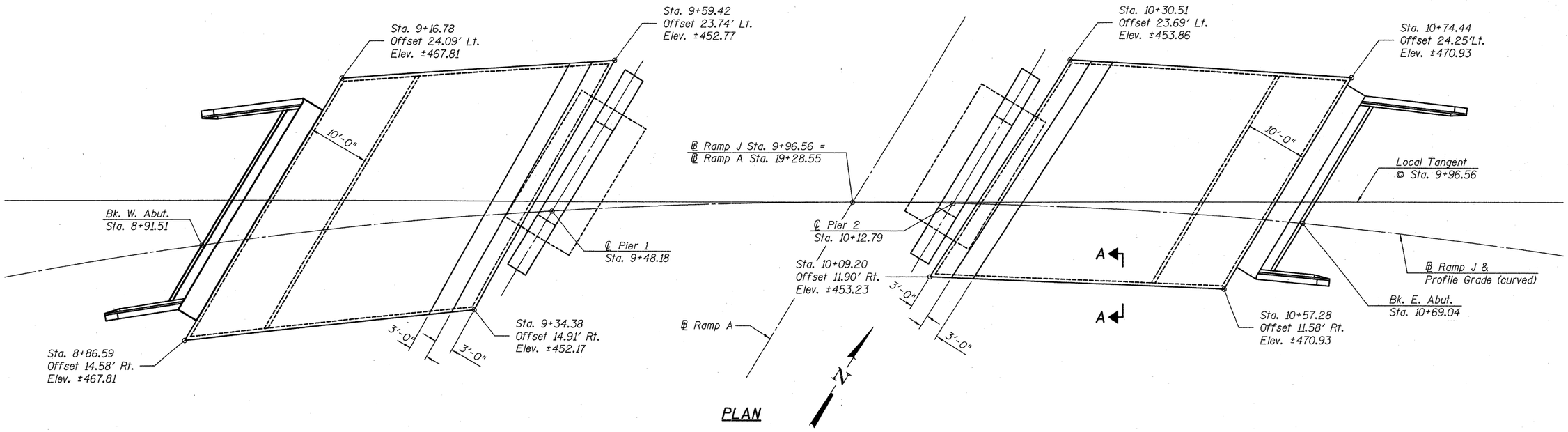

PLAN

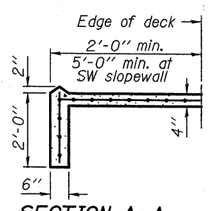

SECTION A-A

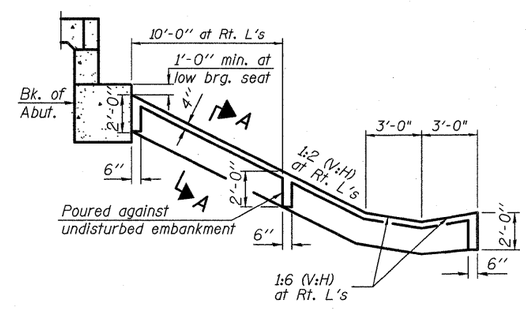

SECTION THRU
CONCRETE SLOPEWALL

Notes:
Slope wall shall be reinforced with welded wire fabric, 6"x6" - W4.0xW4.0, weighing 58 lbs. per 100 sq. ft.

EFK • Moen, LLC
Civil Engineering Design
331 Salem Place, Suite 225
Fairview Heights, IL 62208
Phone 618-206-4250

FILE NAME = 1000098-78182-003-SlopeWall Details.dgn	USER NAME = jo	DESIGNED - CTW	REVISED -	STATE OF ILLINOIS DEPARTMENT OF TRANSPORTATION
		CHECKED - CDL	REVISED -	
	PLOT SCALE = 01.0000 '' / IN.	DRAWN - DP	REVISED -	
	PLOT DATE = 9/7/2011	DATE - 9/7/2011	REVISED -	

SLOPEWALL DETAILS
STRUCTURE NO. 100-0098
SHEET NO. 3 OF 33 SHEETS

F.A.I RTE.	SECTION	COUNTY	TOTAL SHEETS	SHEET NO.
57	(X1-6-2)HB-2	WILLIAMSON	968	686
		CONTRACT NO. 78182		
		ILLINOIS FED. AID PROJECT		

PRINT DATE: 9/7/2011 2:10:23 PM z:\00035 i-57 and i13 interchange\dgn\bridge\final\plotsheets\1000098-78182-003-SlopeWall Details.dgn