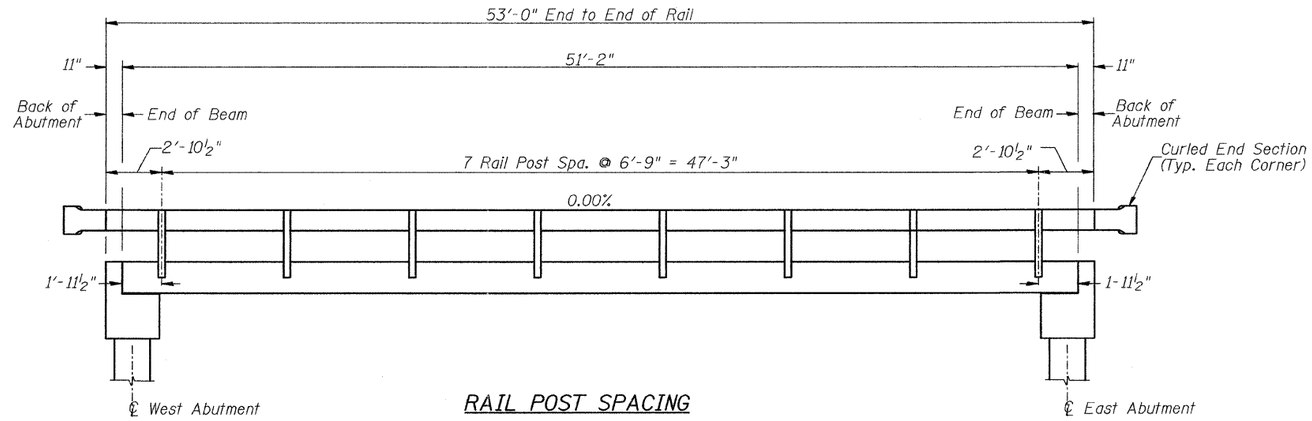

RAIL POST SPACING

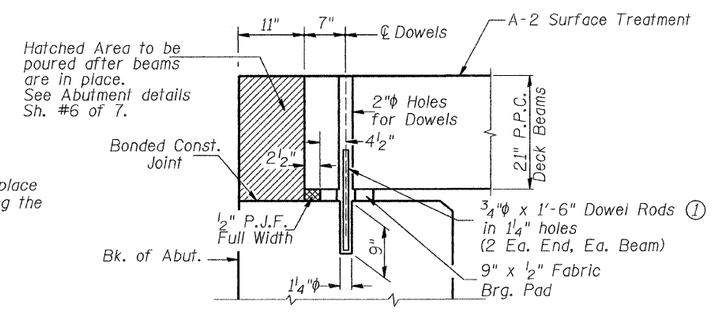

SECTION THRU ABUTMENT

(1) Dowel Rods to be grouted after beams are in place and allowed to cure (Min. 24 hr.) prior to grouting the shear keys.

RAIL POST SPACING AND
SUPERSTRUCTURE DETAILS
PIKE COUNTY
SECTION 09-00083-00-BR
C.H. 13 OVER BREWSTER CREEK

SHEET NO. 5	ROUTE NO.	SECTION	COUNTY	TOTAL SHEETS	SHEET NO.
7 SHEETS	CH 13	09-00083-00-BR	PIKE	26	11
	S.N. 075-3317		CONTRACT NO. 93550		
	FED. ROAD DIST. NO. 7	ILLINOIS	FED. AID PROJECT BRS-0597(103)		

2698b005