URBAN

SUMMARY OF QUANTITIES				CONSTRUCTION TYPE CODE					
CODE NO	ITEM	UNIT	TOTAL QUANTITIES	KENDALL FED 80 STATE 20 0005	WILL FED 80 STATE 20 0005				
20200100	EARTH EXCAVATION	CU YD	5		5				
21101615	TOPSOIL FURNISH AND PLACE, 4"	SQ YD	198		198				
25200110	SODDING, SALT TOLERANT	SQ YD	198		198				
40600290	BITUMINOUS MATERIALS (TACK COAT)	POUND	84111	18932	65179				
40600400	MIXTURE FOR CRACKS, JOINTS, AND FLANGEWAYS	TON	245	57	188				
40600827	POLYMERIZED LEVELING BINDER (MACHINE METHOD), IL-4.75, N50	TON	5234	1250	3984				
40600982	HOT-MIX ASPHALT SURFACE REMOVAL - BUTT JOINT	SQ YD	955	388	567				
40601005	HOT-MIX ASPHALT REPLACEMENT OVER PATCHES	TON	144	30	114				
40603340	HOT-MIX ASPHALT SURFACE COURSE, MIX "D", N70	TON	10658	2547	8111				
42001300	PROTECTIVE COAT	SQ YD	80		80				
42400200	PORTLAND CEMENT CONCRETE SIDEWALK 5 INCH	SQ FT	559		559				
42400800	DETECTABLE WARNINGS	SQ FT	66		66				

1

12

URBAN

SUMMARY OF QUANTITIES				CONSTRUCTION TYPE CODE					
CODE NO	ITEM	UNIT	TOTAL QUANTITIES	KENDALL FED 80 STATE 20 0005	WILL FED 80 STATE 20 0005				
44000158	HOT-MIX ASPHALT SURFACE REMOVAL, 2 1/4"	SQ YD	126886	30324	96562				
44000600	SIDEWALK REMOVAL	SQ FT	559		559				
44002209	HOT-MIX ASPHALT REMOVAL OVER PATCHES, 2 1/4"	SQ YD	1143	240	903				
44201773	CLASS D PATCHES, TYPE I, 11 INCH	SQ YD	5		5				
44201777	CLASS D PATCHES, TYPE II, 11 INCH	SQ YD	58	13	45				
44201783	CLASS D PATCHES, TYPE IV, 11 INCH	SQ YD	1080	227	853				
48102100	AGGREGATE WEDGE SHOULDER, TYPE B	TON	1524	364	1160				
* 66900200	NON-SPECIAL WASTE DISPOSAL	CU YD	5		5				
* 66900450	SPECIAL WASTE PLANS AND REPORTS	LSUM	1		1				
* 66900530	SOIL DISPOSAL ANALYSIS	EACH	1		1				
67000400	ENGINEER'S FIELD OFFICE, TYPE A	CAL MO	3	0.7	2.3				
67100100	MOBILIZATION	LSUM	1	0.2	0.8				
70100460	TRAFFIC CONTROL AND PROTECTION, STANDARD 701306	LSUM	1	0.2	0.8				
70102640	TRAFFIC CONTROL AND PROTECTION, STANDARD 701801	LSUM	1	0.2	0.8				

*SPECIALTY ITEM

FILE NAME = pw:\\IL084EBIDINTEG\Illinois.gov.PWIDOT\Documents\400	USER NAME = kdotmorm	DESIGNED -	REVISED -
	Office\District 1\Projects\D134546\CADData\Design\D134546BR&MOD.dgn	-	REVISED -
	PLOT SCALE = 100.0000 ' / in.	CHECKED -	REVISED -
	PLOT DATE = 10/31/2016	DATE -	REVISED -

STATE OF ILLINOIS
DEPARTMENT OF TRANSPORTATION

SUMMARY OF QUANTITIES
US-30 AT LINCOLN STATION DR TO 143RD ST

SCALE: | SHEET NO. OF SHEETS | STA. TO STA.

F.A.P. RTE.	SECTION	COUNTY	TOTAL SHEETS	SHEET NO.
349	(15&16)RS-12	WILL	35	3

CONTRACT NO. 62C38

FED. ROAD DIST. NO. 1 | ILLINOIS | FED. AID PROJECT

WILL & KENDALL

Rev 1-04-17

URBAN

SUMMARY OF QUANTITIES			TOTAL QUANTITIES	CONSTRUCTION TYPE CODE					
CODE NO	ITEM	UNIT		KENDALL FED 80 STATE 20 0005	WILL FED 80 STATE 20 0005				
70300100	SHORT TERM PAVEMENT MARKING	FOOT	41250	10631	30619				
70300150	SHORT TERM PAVEMENT MARKING REMOVAL	SQ FT	13750	3544	10206				
70300210	TEMPORARY PAVEMENT MARKING LETTERS AND SYMBOLS	SQ FT	1153.2	364	789.2				
70300220	TEMPORARY PAVEMENT MARKING - LINE 4"	FOOT	130459	33574	96885				
70300240	TEMPORARY PAVEMENT MARKING - LINE 6"	FOOT	6406	1749	4657				
70300250	TEMPORARY PAVEMENT MARKING - LINE 8"	FOOT	391	156	235				
70300260	TEMPORARY PAVEMENT MARKING - LINE 12"	FOOT	792	236	556				
70300280	TEMPORARY PAVEMENT MARKING - LINE 24"	FOOT	822	159	663				
* 72501000	TERMINAL MARKER - DIRECT APPLIED	EACH	1	1					
* 78000100	THERMOPLASTIC PAVEMENT MARKING - LETTERS AND SYMBOLS	SQ FT	1153.2	364	789.2				
* 78000200	THERMOPLASTIC PAVEMENT MARKING - LINE 4"	FOOT	130459	33574	96885				
* 78000400	THERMOPLASTIC PAVEMENT MARKING - LINE 6"	FOOT	6218	1704	4514				
* 78000500	THERMOPLASTIC PAVEMENT MARKING - LINE 8"	FOOT	391	156	235				

URBAN

SUMMARY OF QUANTITIES			TOTAL QUANTITIES	CONSTRUCTION TYPE CODE					
CODE NO	ITEM	UNIT		KENDALL FED 80 STATE 20 0005	WILL FED 80 STATE 20 0005				
* 78000600	THERMOPLASTIC PAVEMENT MARKING - LINE 12"	FOOT	1459	842	617				
* 78000650	THERMOPLASTIC PAVEMENT MARKING - LINE 24"	FOOT	822	159	663				
* 78100100	RAISED REFLECTIVE PAVEMENT MARKER	EACH	1198	324	874				
78300200	RAISED REFLECTIVE PAVEMENT MARKER REMOVAL	EACH	1198	324	874				
* 88600600	DETECTOR LOOP REPLACEMENT	FOOT	2919	192	2727				
X0327980	PAVEMENT MARKING REMOVAL - WATER BLASTING	SQ FT	51111	13671	37440				
X2020110	GRADING AND SHAPING SHOULDERS	UNIT	381	91	290				
Z0004562	COMBINATION CONCRETE CURB AND GUTTER REMOVAL AND REPLACEMENT	FOOT	53		53				
Z0030850	TEMPORARY INFORMATION SIGNING	SQ FT	51.4	25.7	25.7				
~~Z0033700~~	~~LONGITUDINAL JOINT SEALANT~~	~~FOOT~~	~~48000~~	~~10800~~	~~37200~~				
X0320050	CONSTRUCTION LAYOUT (SPECIAL)	L SUM	1		1				

*SPECIALTY ITEM

1

13

FILE NAME = pw:\\ILD04EBIDINTEC\Hinds.pw:PWIDOT\Documents\IDOT Office\District 1\Projects\D1345\6-CADD\Hinds\Design\D1345SB\Design	USER NAME = redstmorm	DESIGNED -	REVISED -
			REVISED -
	PLOT SCALE = 100.0000 ' / in.	CHECKED -	REVISED -
	PLOT DATE = 10/31/2016	DATE -	REVISED -

STATE OF ILLINOIS
DEPARTMENT OF TRANSPORTATION

SUMMARY OF QUANTITIES
US-30 AT LINCOLN STATION DR TO 143RD ST

SCALE: | SHEET NO. OF SHEETS | STA. TO STA.

F.A.P. RTE.	SECTION	COUNTY	TOTAL SHEETS	SHEET NO.
349	(15&16)RS-12	WILL	35	4
		CONTRACT NO. 62C38		
FED. ROAD DIST. NO. 1	ILLINOIS	FED. AID PROJECT		

WILL & KENDALL

1 Rev. 1-04-17

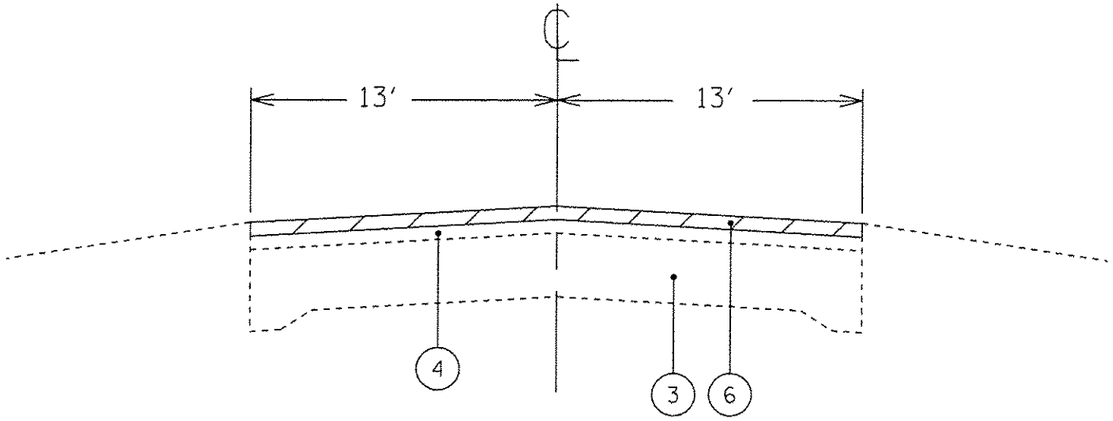

STA 190+00 TO STA 308+00

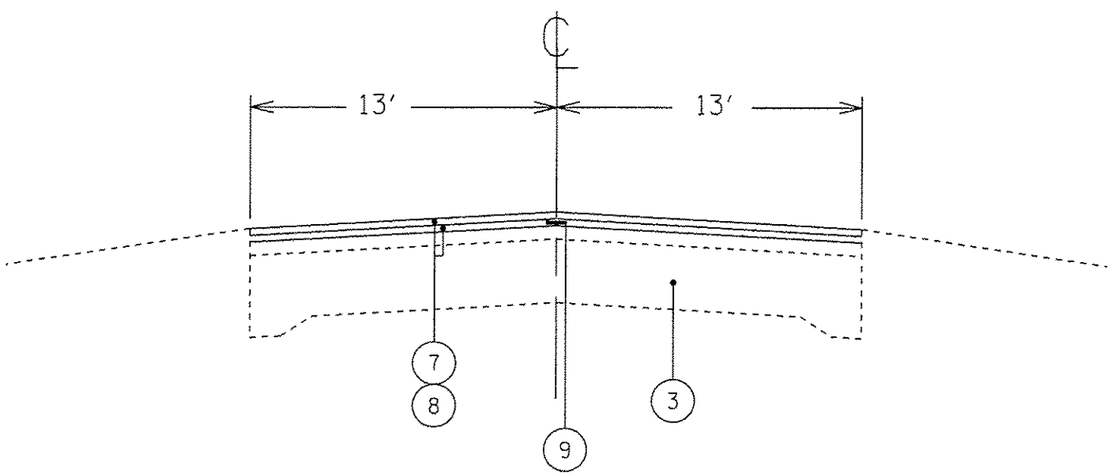

STA 190+00 TO STA 308+00

HOT-MIX ASPHALT MIXTURE REQUIREMENTS		QUALITY MANAGEMENT PROGRAM (QMP)
MIXTURE TYPE	AIR VOIDS (%) @ NDES	
RESURFACING:		
HMA SURFACE COURSE MIX "D", N70, 1½" (IL-9.5mm)	4% @ 70 GYR.	PFP 1
POLY. LEVELING BINDER (MM) IL-4.75, N50, 3/4"	3.5% @ 50 GYR.	QCP
HOT-MIX ASPHALT PATCHING		
CLASS D PATCHES (HMA BINDER IL-19 mm), 11"	4% @ 70 GYR.	QC/QA
HMA REPLACEMENT OVER PATCHES (HMA BINDER IL-19 mm), 2¼"	4% @ 70 GYR.	QC/QA
QMP DESIGNATION QUALITY CONTROL/QUALITY ASSURANCE (QC/QA) QUALITY CONTROL FOR PERFORMANCE (QCP)		

THE UNIT WEIGHT USED TO CALCULATE ALL HMA SURFACE MIXTURE QUANTITIES IS 112 POUND PER SQUARE YARD-INCH

THE "AC TYPE" FOR POLYMERIZED HMA MIXES SHALL BE "SBS / SBR PG 76-22" AND FOR NON-POLYMERIZED HMA THE "AC TYPE" SHALL BE "PG 64-22" UNLESS MODIFIED BY DISTRICT ONE SPECIAL PROVISIONS.

"FOR USE OF RECYCLED MATERIALS SEE DISTRICT ONE SPECIAL PROVISIONS".

QUALITY MANAGEMENT PROGRAM (QMP) IDENTIFIES THE PARTICULAR QUALITY CONTROL SPECIFICATION THAT APPLIES TO THE HMA MIXTURE.

LEGEND

1. EXIST. SUB-BASE
2. EXIST. PCC BASE COURSE, 9"
3. EXIST. PCC PAVEMENT, 9"-6"-9"
4. EXIST. HMA SURFACE COURSE, 4"
5. EXIST. AGGREGATE SHOULDER
6. PROP. HMA SURFACE REMOVAL, 2¼"
7. PROP. HMA SURFACE COURSE, MIX "D", N70, 1½"
8. PROP. POLY. LEVELING BINDER, N50, ¾" (MACHINE METHOD)
9. PROP. HMA LONGITUDINAL JOINT SEALANT
10. PROP. AGGREGATE WEDGE SHOULDER, TYPE B

NOTES:
1. HMA LONGITUDINAL JOINT SEALANT SHALL BE APPLIED ON THE ROADWAY AS DESCRIBED IN THE SPECIAL PROVISION
2. PATCHING SHALL BE DONE BEFORE MILLING

1 Revised Sheet 1-04-17

FILE NAME = pw:\\IL084EBIDINTEG.illinois.gov:PWIDOT\Documents\IDOT Offices\District 1\Projects\D134516\PROWD\Data\Design\D134516-sht-typical.dgn	USER NAME = STEEDPA	DESIGNED -	REVISED -
			REVISED -
	PLOT SCALE = 100.0000 ' / in.	CHECKED -	REVISED -
Default	PLOT DATE = 12/27/2016	DATE -	REVISED -

STATE OF ILLINOIS
DEPARTMENT OF TRANSPORTATION

TYPICAL SECTIONS
US RTE 30 FROM LINCOLN STATION DR TO 143RD ST

SCALE: SHEET OF SHEETS STA. TO STA.

F.A.P. RTE.	SECTION	COUNTY	TOTAL SHEETS	SHEET NO
349	(15&16)RS-12	WILL	35	5
		CONTRACT NO. 62C38		
		ILLINOIS FED. AID PROJECT		