F.A. RTE.	SECTION	COUNTY	TOTAL SHEETS	SHEET NO.
1349	3197 (A&B) RS	COOK	33	8
STA.		TO STA.		
FED. ROAD DIST. NO.	ILLINOIS	FED. AID PROJECT		

CONTRACT 60721

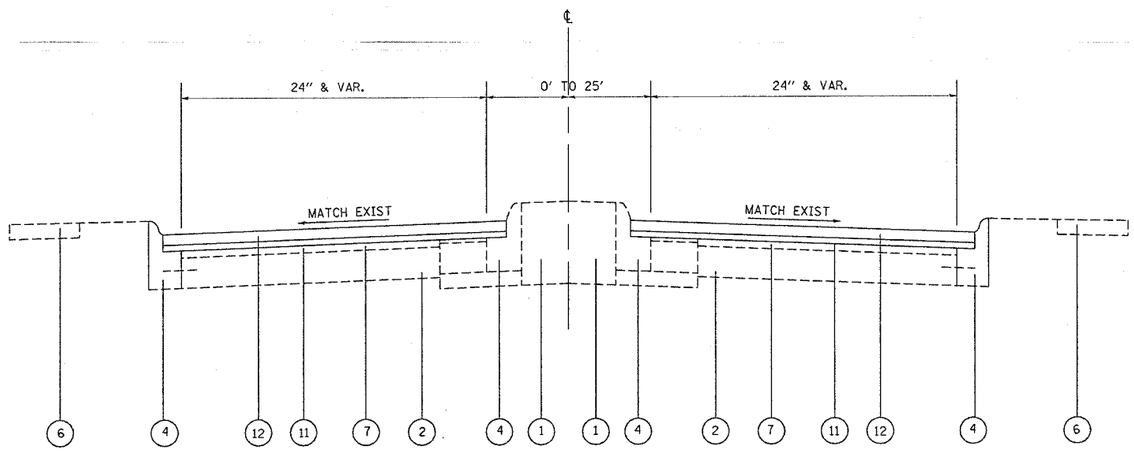

PROPOSED TYPICAL SECTION
DEVON AVE.

ALDINE AVE. TO CUMBERLAND AVE.

LEGEND

1. EXISTING CONCRETE OR GRASS MEDIAN
2. EXISTING P.C.C. BASE 9"
3. EXISTING BITUMINOUS OVERLAY (±4¾)
4. EXISTING COMBINATION CONCRETE CURB AND GUTTER, TYPE B-6.12 OR B-6.24
5. EXISING BITUMINOUS SHOULDER
5B. EXISTING AGGREGATE SHOULDER, TYPE B
6. EXISTING CONCRETE SIDEWALK
7. EXISTING BITUMINOUS OVERLAY AFTER MILLING
8. PROP. BITUMINOUS SURFACE REMOVAL, 2¼"
9. PROP. BITUMINOUS SURFACE REMOVAL, (VARIABLE DEPTH) 1½" TO 1"
10. PROP. BITUMINOUS CONCRETE SURFACE COURSE, SUPERPAVE MIX "D", N70, 1½" TO 1"
11. PROP. POLYMERED LEVELING BINDER (MACHINE METHOD), SUPERPAVE, IL-4-75, N50,¾"
12. PROP. BITUMINOUS CONCRETE SURFACE COURSE, SUPERPAVE MIX "D", N70, 1½"
14. PROP AGGREGATE SHOULDER TYPE B

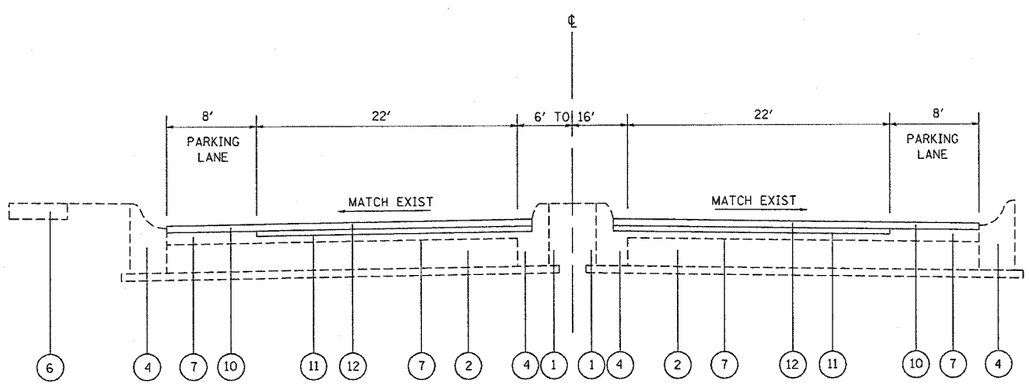

PROPOSED TYPICAL SECTION
DEVON AVE.

CUMBERLAND AVE. TO TALCOTT RD.

MIXTURE REQUIREMENTS			
MIXTURE USE(S):	AC/PG	RAP % MAX	DESIGN AIR VOIDS %
POLYMERIZEDLEVELING BINDER (MACHIVE METHOD) SUPERPAVE IL 4-75,N50	SBS/SBR PG 76-28	0%	2.5 @ 50 Gyr.
BITUMINOUS CONCRETE SURFACE COURSE SUPERPAVE MIX D, N70	PG 64-22	10%	4 @ 70 Gyr.
BITUMINOUS REPLACEMENTS OVER PATCHES-BINDER IL-19mm	PG 58-22	15%	4 @ 70 Gyr.
CLASS D PATCHES- BINDER IL-19mm	PG 58-22	15%	4 @ 70 Gyr.
BITUMINOUS BASE COURSE, SUPERPAVE 6"-BINDER IL-19mm	PG 58-22	50%	2 @ 50 Gyr.

DESIGNERS USED UNIT WEIGHT OF 112 LB/SQYD/IN FOR ALL BITUMINOUS MATERIALS

REVISIONS	
NAME	DATE

ILLINOIS DEPARTMENT OF TRANSPORTATION

DEVON AVENUE
DESPLAINES RIVER RD.
TO CANFIELD RD.
PROPOSED TYPICAL SECTIONS

SCALE: VERT. HORIZ.
DATE
DRAWN BY
CHECKED BY

PLOT DATE = 10/28/2004
FILE NAME = c:\projects\d110499\d110499aa.m32
PLOT SCALE = 50.0000 ' / IN.
REFERENCE = REF

10/28/2004
c:\projects\d110499\d110499aa.m32
gulllaumefp