F.A.S. RTE	SECTION	COUNTY	TOTAL SHEETS	SHEET NO.
1197	105-T	WHITESIDE	59	55
STA. 425+38.00		TO STA. 427+00.00		
FED. ROAD DIST. NO.	ILLINOIS	FED. AID PROJECT		

CONTRACT 64421

FINAL SURVEY		BY	DATE
NOTE BOOK	SURVEYED		
	PLOTTED		
	TEMPLATE		
	AREAS		
NO.	AREAS CHECKED		

ORIGINAL SURVEY		BY	DATE
NOTE BOOK	SURVEYED		
	PLOTTED		
	TEMPLATE		
	AREAS		
NO.	AREAS CHECKED		

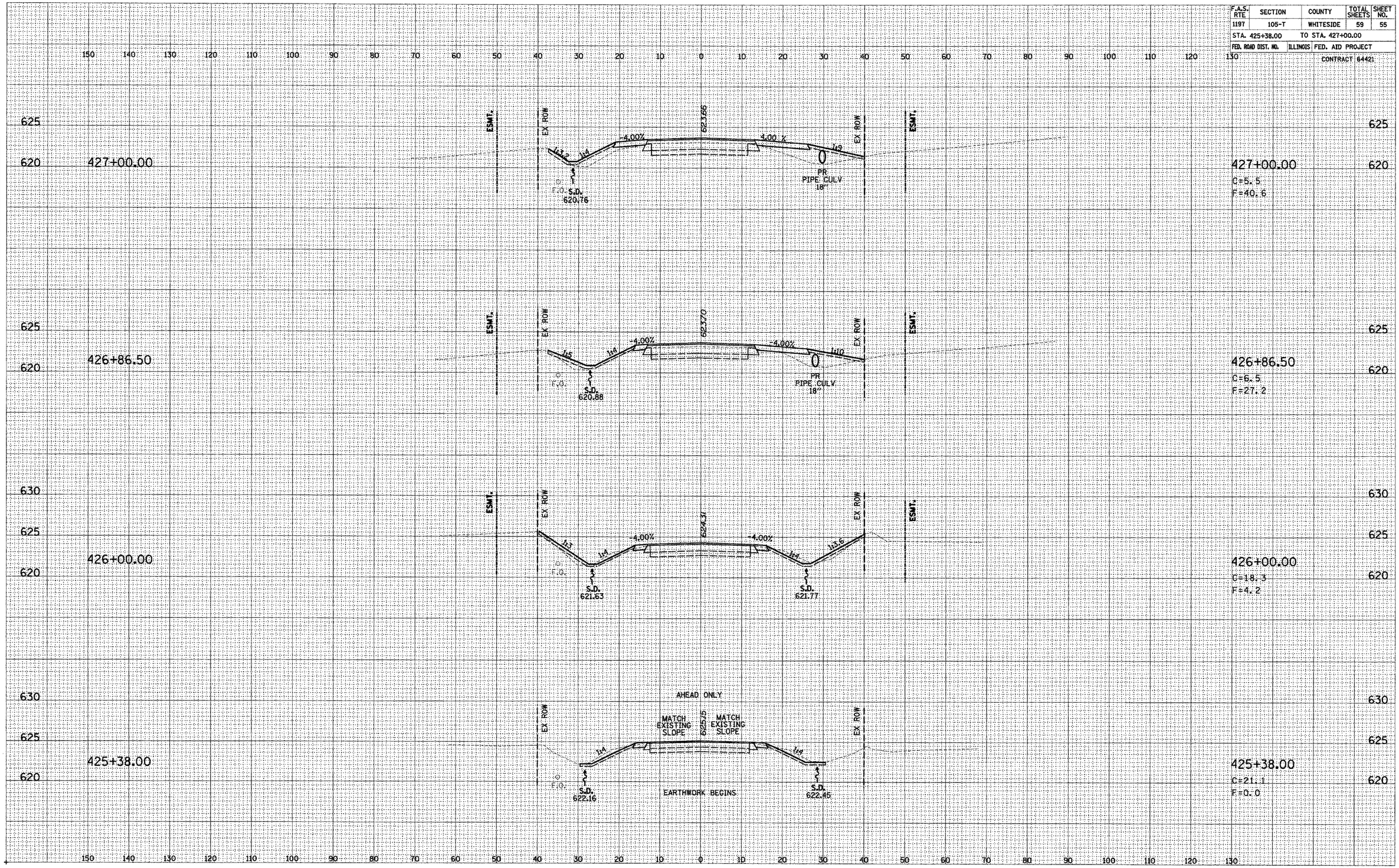

PLOT DATE: 11/5/2004 11:20:00 AM d05499bxm1.dgn

MOLINE ROAD STA 425+38.00 TO STA 427+00.00