ROUTE NO.	SECTION	COUNTY	TOTAL SHEETS	SHEET NO.
T.R. 158	03-05123 -00-BR	MOULTRIE	13	9
FED. ROAD DIST. NO.		ILLINOIS	FED. AID PROJECT-	

CONTRACT NO. 91318

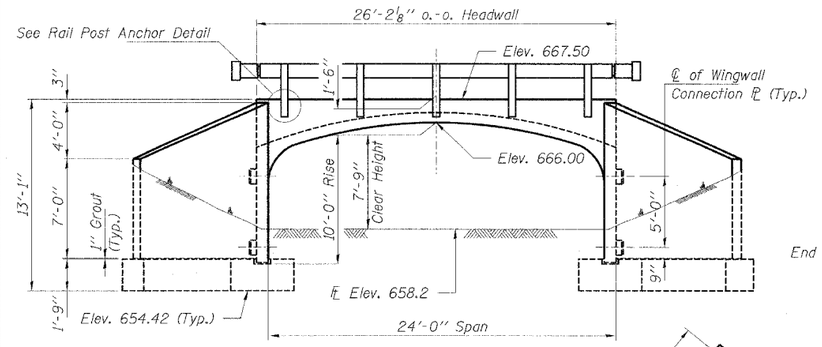

END ELEVATION

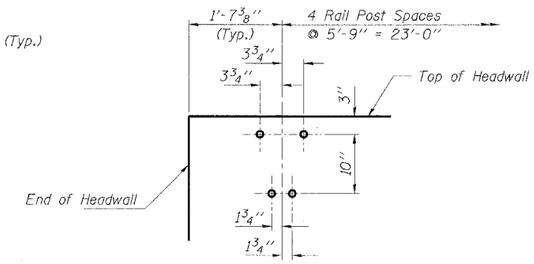

RAIL POST ANCHOR DETAIL

See sheet 11 for Post Insert details

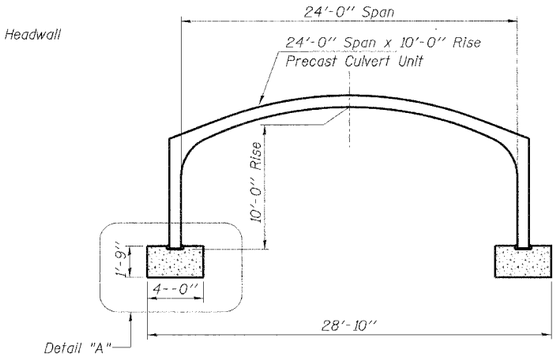

SECTION A-A

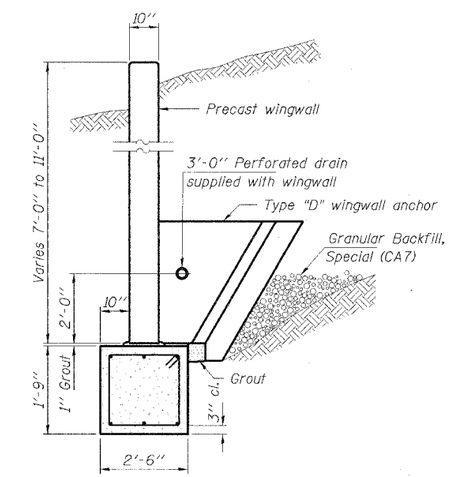

SECTION B-B

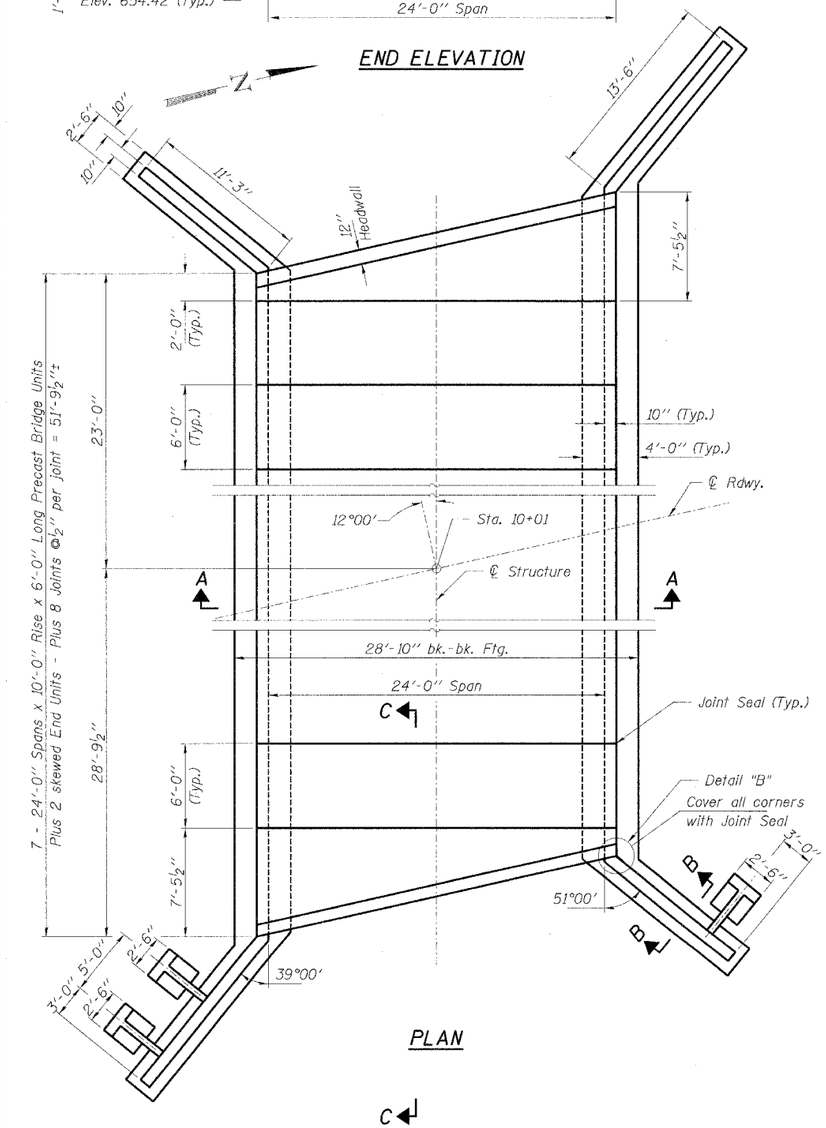

PLAN

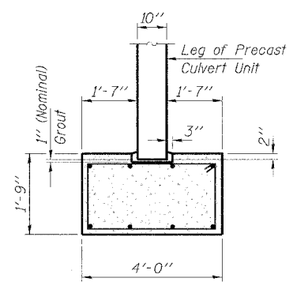

DETAIL "A"

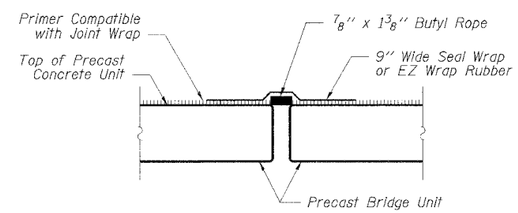

JOINT SEAL DETAIL

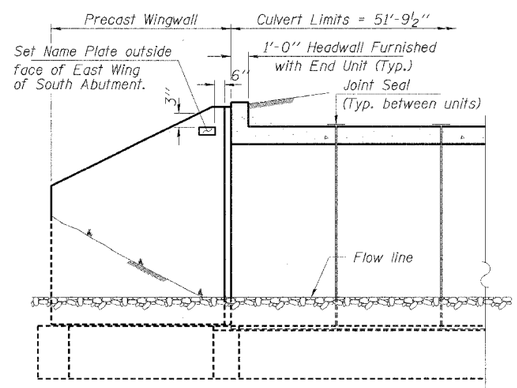

SECTION C-C

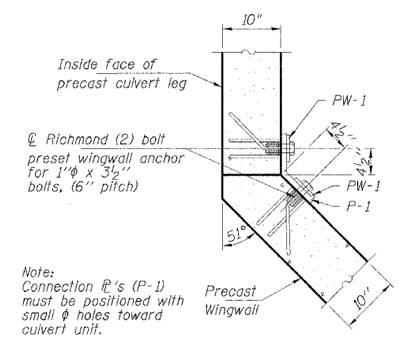

DETAIL "B"

NOTES

DESIGN DATA

Design Loading: HS20-44
Design Method: Load Factor per AASHTO Specification
Assumed Allowable Soil Bearing: 4.5 ton/sf.

All footings shall bear on solid undisturbed soil having a bearing capacity of not less than 1.7 ton/sf.

If bearing is not obtained at indicated plan elevations, material shall be removed in accordance with 502.07 of the Standard Specifications.

A qualified geotechnical inspector will determine if the footing insitu unconfined compressive strength meets or exceeds the design allowable soil bearing. Any remedial treatment must be approved by the Field Inspector Resident Engineer with concurrence of the Local Agency Engineer. Cost included in that of Three Sided Precast Concrete Structures.

MATERIALS

Concrete for Footings and Wingwalls shall have a minimum compressive strength of 3.5 ksi.

Reinforcing steel for Footings and Wingwalls shall conform to AASHTO M31 or M322 Grade 60.

BILL OF MATERIAL

ITEM	UNIT	QUANTITY
Three Sided Precast Concrete Structure 24'x10'	Feet	52

HLR
Rice, Berry and Associates
A Division of Hampton, Lenzini and Renwick, Inc.
Civil & Structural Engineers
801 S. Durkin Drive
Springfield, Illinois 62704
217-546-3400
P.O. Box 1036
DuQuoin, Illinois 62832
618-790-4637

Account Number 12-72-0016-1
Date: 11/01/04

DESIGNED: T.P.L. | CHECKED: M.G.B. | DRAWN: D.T.W.

CULVERT DETAILS

SECTION 03-05123-00-BR

LOWE ROAD DISTRICT

MOULTRIE COUNTY

STATION 10+01

...\P\12720016\Plans\72016cu1.dgn 11/02/2004 08:30:23 AM