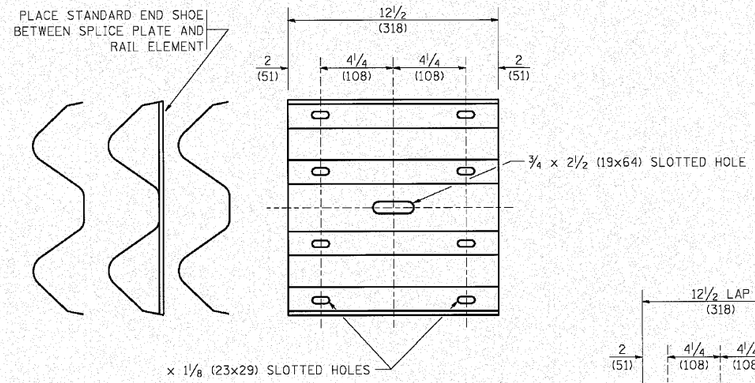


## SPLICE PLATE

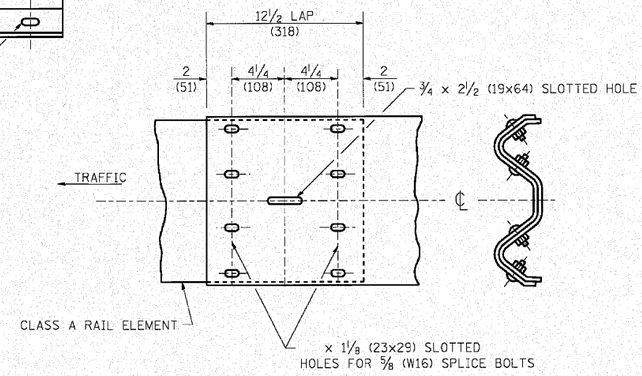


## RAIL ELEMENT SPLICE

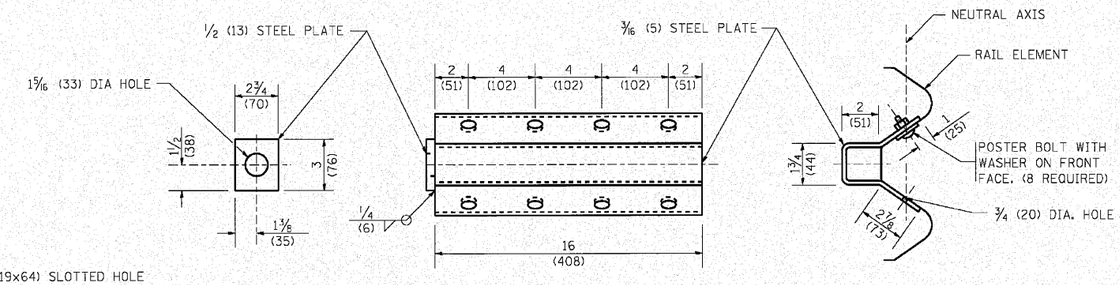


**NOTE:**

ANCHOR PLATE T SHALL BE USED TO ATTACH CABLE ASSEMBLY TO GUARDRAIL WHEN REQUIRED ON TRAFFIC BARRIER TERMINALS.

## ANCHORE PLATE T DETAILS

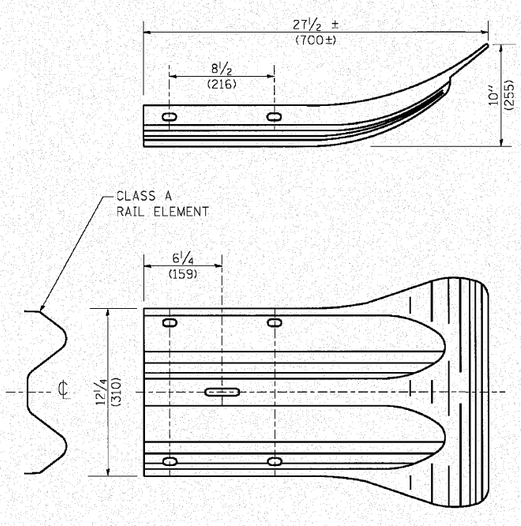


## END SECTION

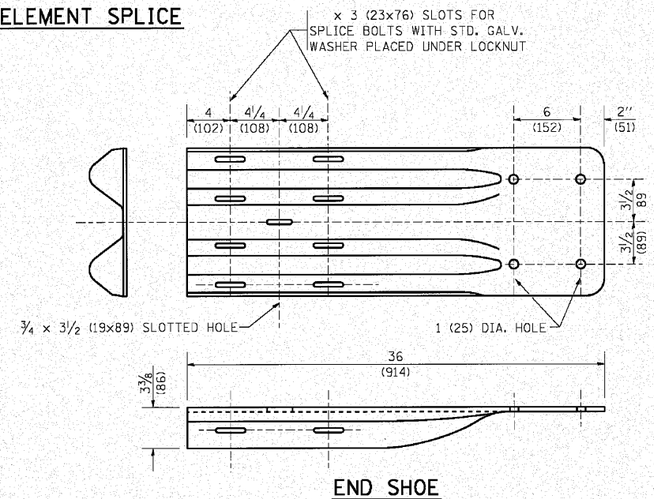


## END SHOE

**NOTE:**

WHEN END SHOE IS ATTACHED TO A BRIDGE PARAPET WHICH HAS AN EXPANSION JOINT, THE BOLTS SHALL BE PROVIDED WITH A LOCKNUT OR DOUBLE NUT AND SHALL BE TIGHTENED ONLY TO A POINT THAT WILL ALLOW GUARDRAIL MOVEMENT.

THE STANDARD END SHOE SHALL BE ATTACHED TO THE CONCRETE WITH PRE-DRILLED OR SELF-DRILLING ANCHOR BOLTS. THE ANCHOR CONE SHALL BE SET FLUSH WITH THE SURFACE OF THE CONCRETE.

EXTERNALLY THREADED STUDS PROTRUDING FROM THE SURFACE OF THE CONCRETE WILL NOT BE PERMITTED.

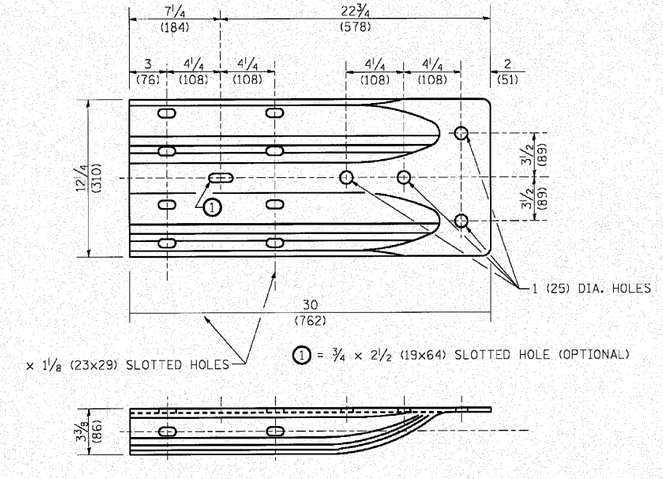


## ALTERNATE END SHOE

| | | | | | | | | | |
|---|---|---|---|---|---|---|---|---|---|
| ENGINEERING CONSULTANT<br>Clorba Group, Inc.<br>CONSULTING ENGINEERS | USER NAME = gaglianobt | DESIGNED - | REVISED - 10-31-06 | STATE OF ILLINOIS<br>DEPARTMENT OF TRANSPORTATION | REMOVE AND REERECT<br>STEEL PLATE BEAM GUARDRAIL | F.A.I. RTE. 80 | SECTION 99-5-Y | COUNTY WILL | TOTAL SHEETS 276 / SHEET NO. 198 |
| | | DRAWN - | REVISED - | | | BM-21 | | CONTRACT NO. 60147 | |
| | PLOT SCALE = 50.0000 ' / IN. | CHECKED - | REVISED - | | SCALE: NONE / SHEET NO. 3 OF 4 SHEETS / STA. / TO STA. | FED. ROAD DIST. NO. 1 | ILLINOIS | FED. AID PROJECT | |
| | PLOT DATE = 1/4/2008 | DATE - | REVISED - | | | | | | |

n:\proj\3384\2_west\design\details\3384W-Detail04C (Standard).dgn