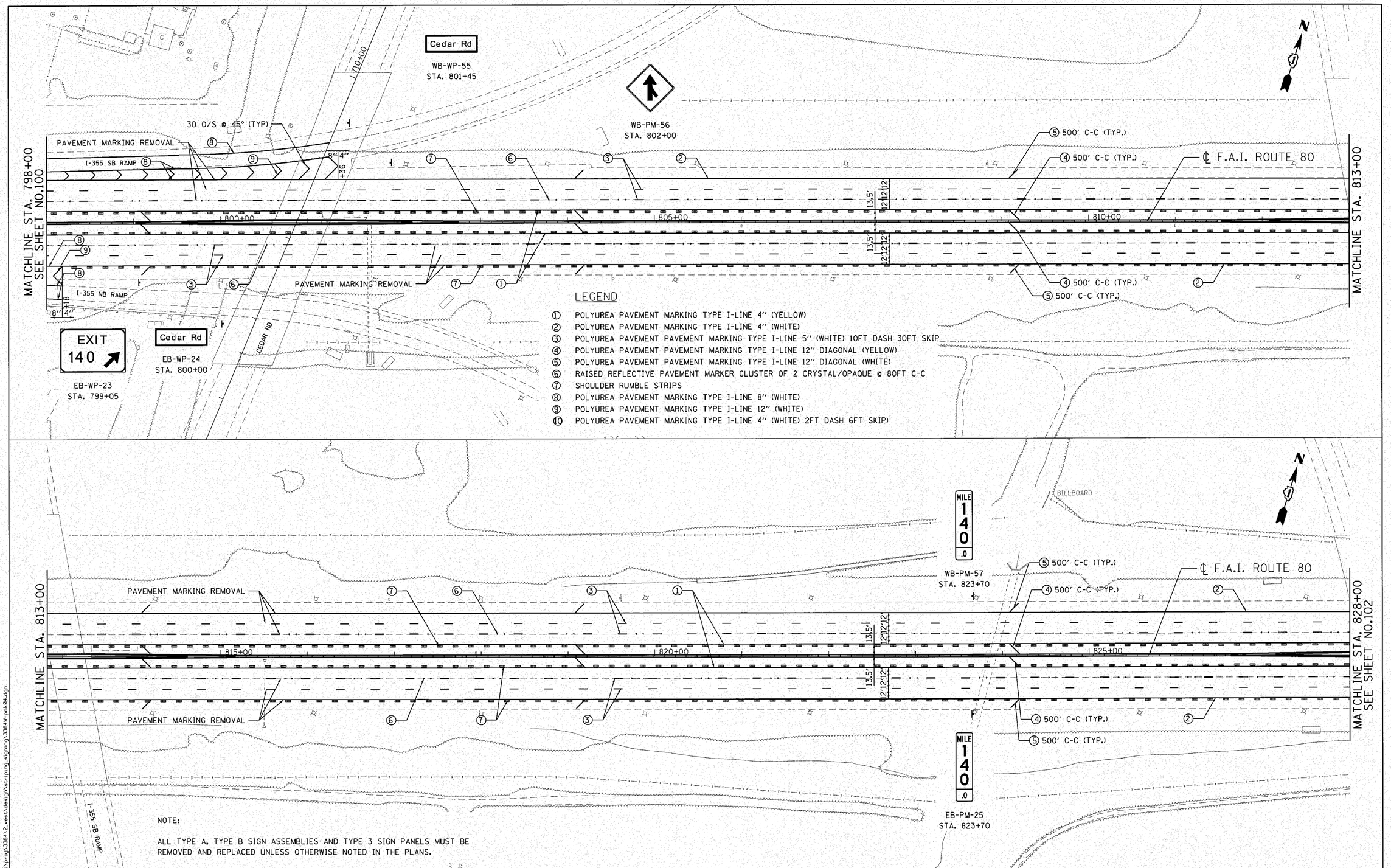

NOTE:

ALL TYPE A, TYPE B SIGN ASSEMBLIES AND TYPE 3 SIGN PANELS MUST BE REMOVED AND REPLACED UNLESS OTHERWISE NOTED IN THE PLANS.

n:\ciorba\33841\2_west\design\str\prog_signing\33841w-pmk04.dgn

ENGINEERING CONSULTANT			
Ciorba Group, Inc. CONSULTING ENGINEERS 5507 North Cumberland Avenue, Suite 402 Chicago, Illinois 60656 Tel. 773.775.4008 Fax 773.775.4014 Email chicago@ciorba.com	USER NAME = jkjellman	DESIGNED - CRC	REVISED -
		DRAWN - JMK	REVISED -
	PLOT SCALE = 50.0000 ' / IN.	CHECKED - MRJ	REVISED -
	PLOT DATE = 12/3/2010	DATE - 10/27/2010	REVISED -

STATE OF ILLINOIS
DEPARTMENT OF TRANSPORTATION

F.A.I. 80 FROM US 30 TO NS RAILROAD
PAVEMENT MARKING AND SIGNING PLAN

SCALE: 1" = 50' | SHEET NO. OF SHEETS | STA. 798+00 TO STA. 828+00

F.A.I. RTE.	SECTION	COUNTY	TOTAL SHEETS	SHEET NO.
80	99-5-Y	WILL	276	101
		CONTRACT NO. 60147		
		ILLINOIS FED. AID PROJECT		

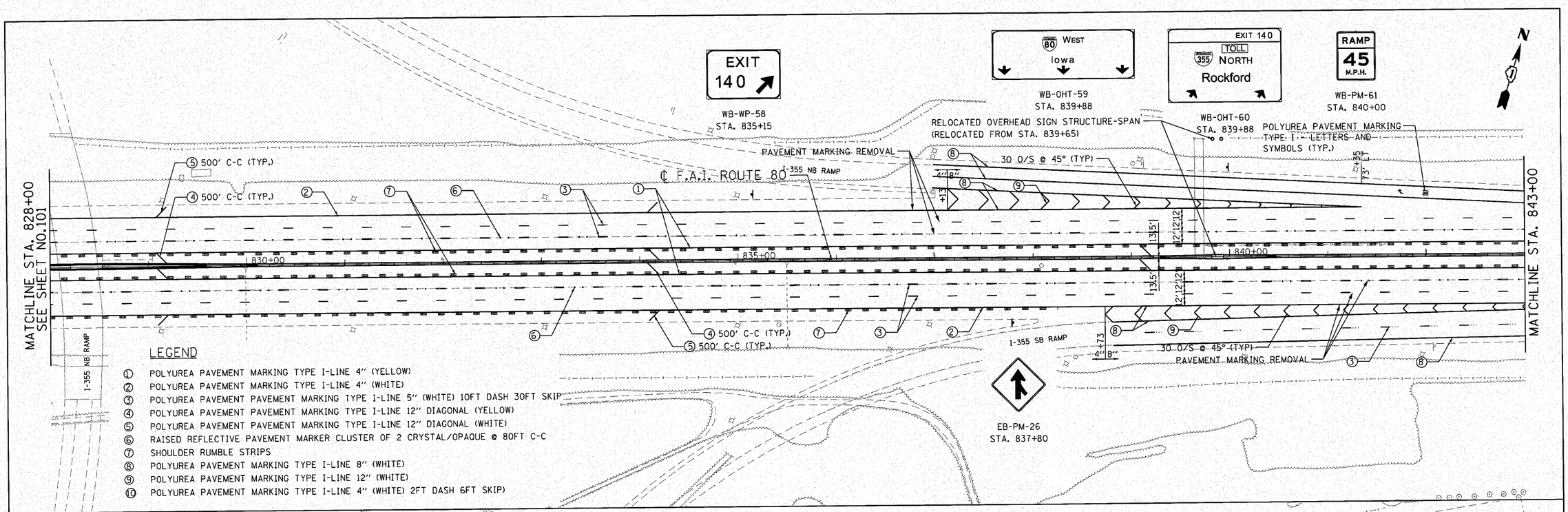

LEGEND

1. POLYUREA PAVEMENT MARKING TYPE I-LINE 4" (YELLOW)
2. POLYUREA PAVEMENT MARKING TYPE I-LINE 4" (WHITE)
3. POLYUREA PAVEMENT PAVEMENT MARKING TYPE I-LINE 5" (WHITE) 10FT DASH 30FT SKIP
4. POLYUREA PAVEMENT PAVEMENT MARKING TYPE I-LINE 12" DIAGONAL (YELLOW)
5. POLYUREA PAVEMENT PAVEMENT MARKING TYPE I-LINE 12" DIAGONAL (WHITE)
6. RAISED REFLECTIVE PAVEMENT MARKER CLUSTER OF 2 CRYSTAL/OPAQUE @ 80FT C-C
7. SHOULDER RUMBLE STRIPS
8. POLYUREA PAVEMENT MARKING TYPE I-LINE 8" (WHITE)
9. POLYUREA PAVEMENT MARKING TYPE I-LINE 12" (WHITE)
10. POLYUREA PAVEMENT MARKING TYPE I-LINE 4" (WHITE) 2FT DASH 6FT SKIP)

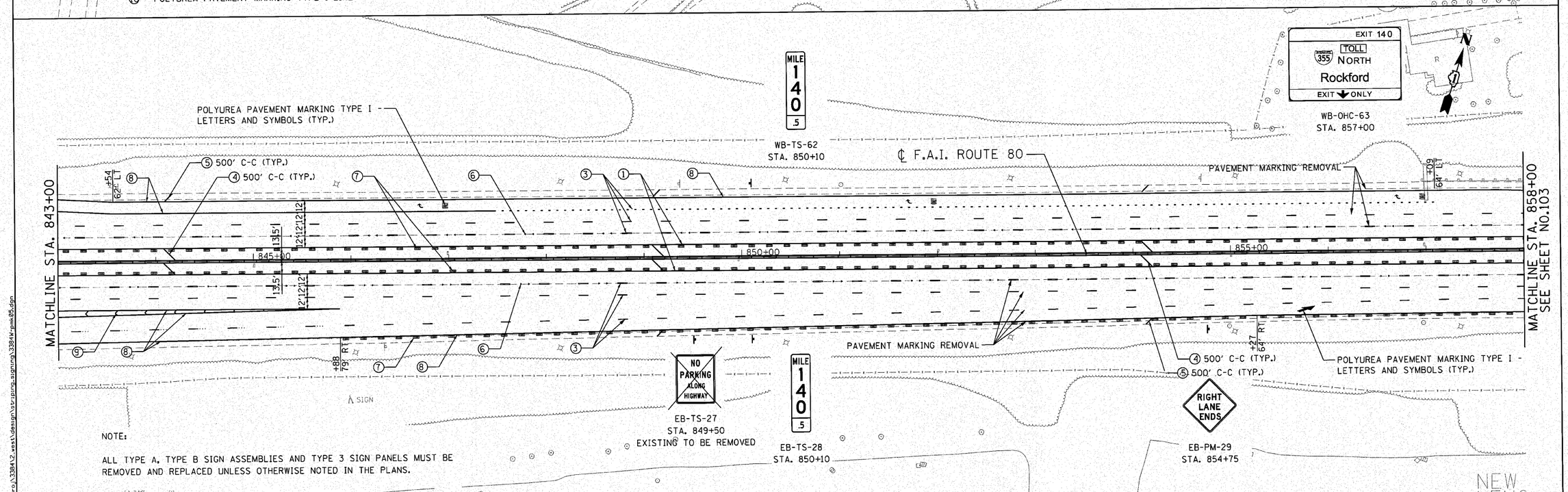

NOTE:

ALL TYPE A, TYPE B SIGN ASSEMBLIES AND TYPE 3 SIGN PANELS MUST BE REMOVED AND REPLACED UNLESS OTHERWISE NOTED IN THE PLANS.

n:\proj\33841\2_west\design\striping_signing\3384w-pmk05.dgn

ENGINEERING CONSULTANT				
Ciorba Group, Inc. CONSULTING ENGINEERS 8507 North Cumberland Avenue, Suite 402 Chicago, Illinois 60656 Ph 773.775.4000 Fax 773.775.4014 Email chicago@ciorba.com	USER NAME = jkjellman	DESIGNED - CRC	REVISED -	
		DRAWN - JMK	REVISED -	
	PLOT SCALE = 50.0000 ' / IN.	CHECKED - MRJ	REVISED -	
	PLOT DATE = 12/3/2010	DATE - 10/27/2010	REVISED -	

STATE OF ILLINOIS
DEPARTMENT OF TRANSPORTATION

F.A.I. 80 FROM US 30 TO NS RAILROAD
PAVEMENT MARKING AND SIGNING PLAN

SCALE: 1" = 50' | SHEET NO. OF SHEETS | STA. 828+00 TO STA. 858+00

F.A.I. RTE.	SECTION	COUNTY	TOTAL SHEETS	SHEET NO.
80	99-5-Y	WILL	276	102
		CONTRACT NO. 60147		
		ILLINOIS FED. AID PROJECT		

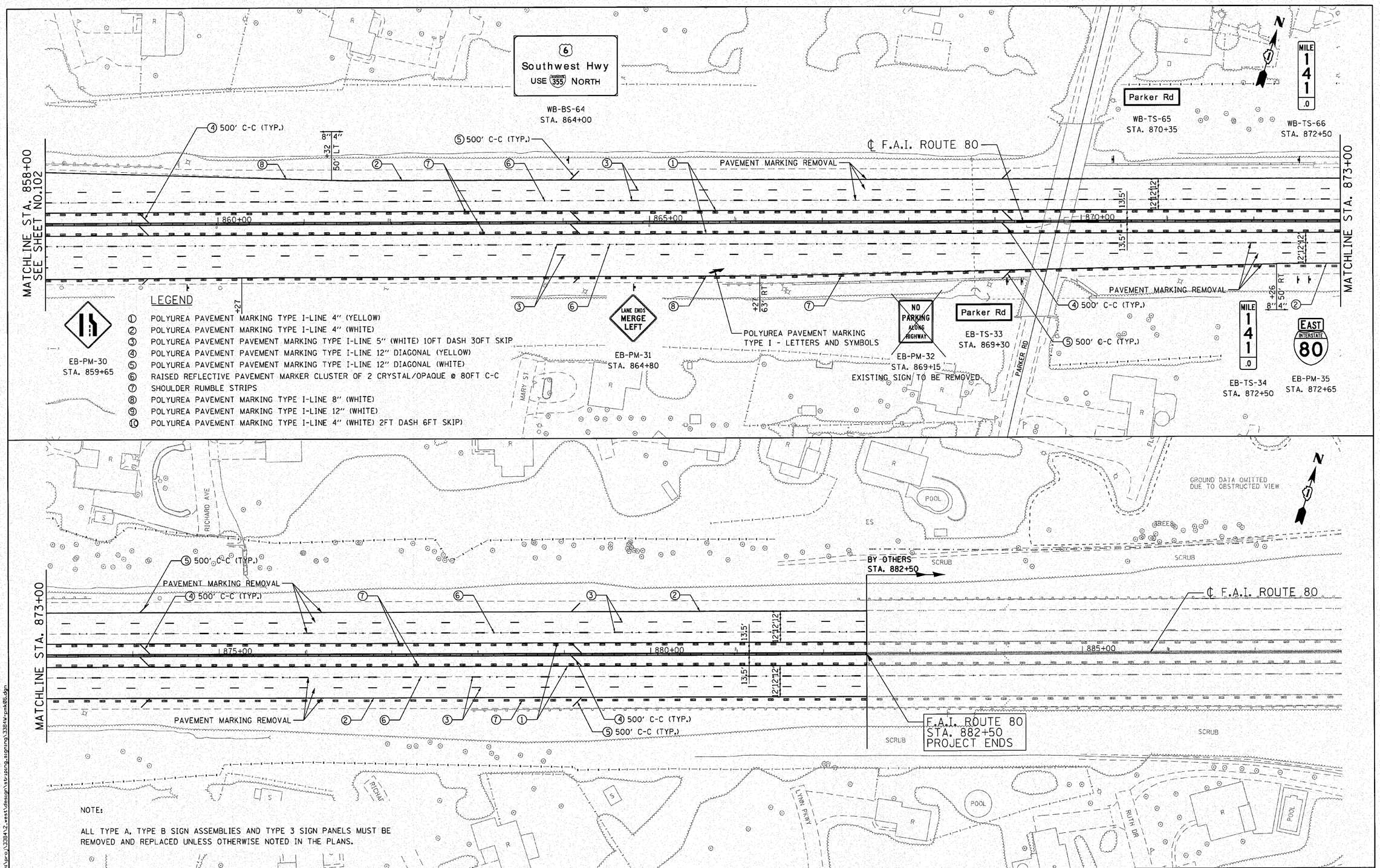

LEGEND

1. POLYUREA PAVEMENT MARKING TYPE I-LINE 4" (YELLOW)
2. POLYUREA PAVEMENT MARKING TYPE I-LINE 4" (WHITE)
3. POLYUREA PAVEMENT PAVEMENT MARKING TYPE I-LINE 5" (WHITE) 10FT DASH 30FT SKIP
4. POLYUREA PAVEMENT PAVEMENT MARKING TYPE I-LINE 12" DIAGONAL (YELLOW)
5. POLYUREA PAVEMENT PAVEMENT MARKING TYPE I-LINE 12" DIAGONAL (WHITE)
6. RAISED REFLECTIVE PAVEMENT MARKER CLUSTER OF 2 CRYSTAL/OPAQUE @ 80FT C-C
7. SHOULDER RUMBLE STRIPS
8. POLYUREA PAVEMENT MARKING TYPE I-LINE 8" (WHITE)
9. POLYUREA PAVEMENT MARKING TYPE I-LINE 12" (WHITE)
10. POLYUREA PAVEMENT MARKING TYPE I-LINE 4" (WHITE) 2FT DASH 6FT SKIP)

NOTE:

ALL TYPE A, TYPE B SIGN ASSEMBLIES AND TYPE 3 SIGN PANELS MUST BE REMOVED AND REPLACED UNLESS OTHERWISE NOTED IN THE PLANS.

n:\proj\3384\2_east\design\str_pm\g_signing\3384w_pmk05.dgn

ENGINEERING CONSULTANT				
Ciorba Group, Inc. CONSULTING ENGINEERS 5507 North Cumberland Avenue, Suite 402 Chicago, Illinois 60656 Tel: 773.775.4009 Fax 773.775.4014 Email chicago@ciorba.com	USER NAME = jkjellman	DESIGNED - CRC	REVISED -	
		DRAWN - JMK	REVISED -	
	PLOT SCALE = 50.0000 ' / IN.	CHECKED - MRJ	REVISED -	
	PLOT DATE = 12/3/2010	DATE - 10/27/2010	REVISED -	

STATE OF ILLINOIS
DEPARTMENT OF TRANSPORTATION

F.A.I. 80 FROM US 30 TO NS RAILROAD
PAVEMENT MARKING AND SIGNING PLAN

SCALE: 1" = 50' | SHEET NO. OF SHEETS | STA. 858+00 TO STA. 882+50

F.A.I. RTE.	SECTION	COUNTY	TOTAL SHEETS	SHEET NO.
80	99-5-Y	WILL	276	103
		CONTRACT NO. 60147		
		ILLINOIS FED. AID PROJECT		

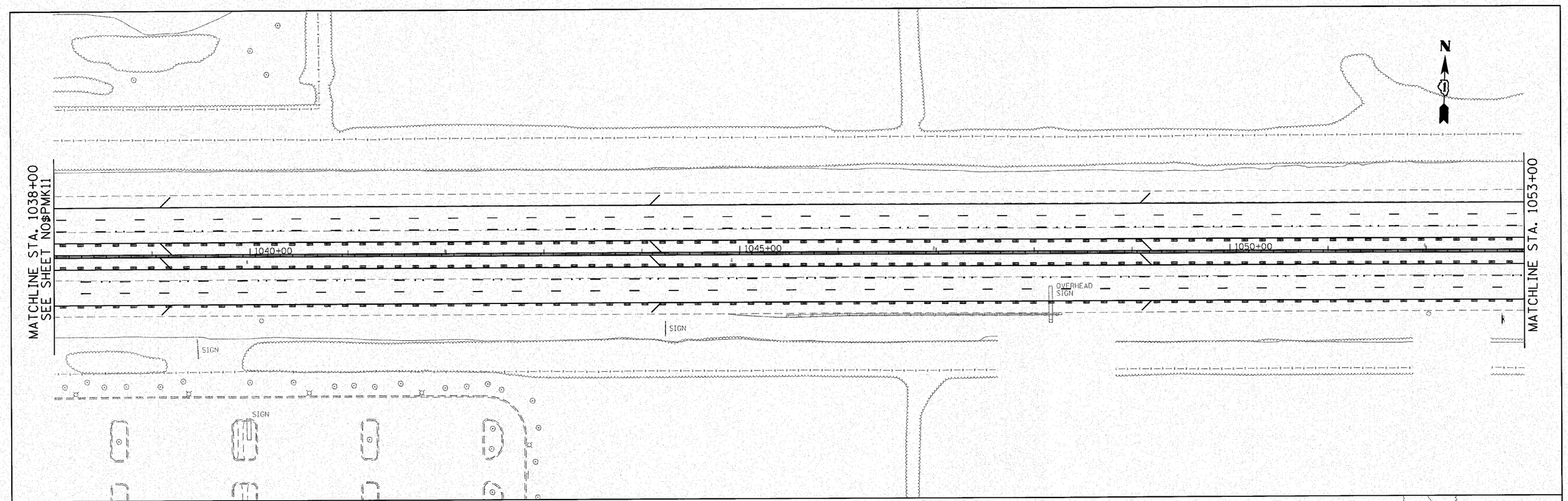

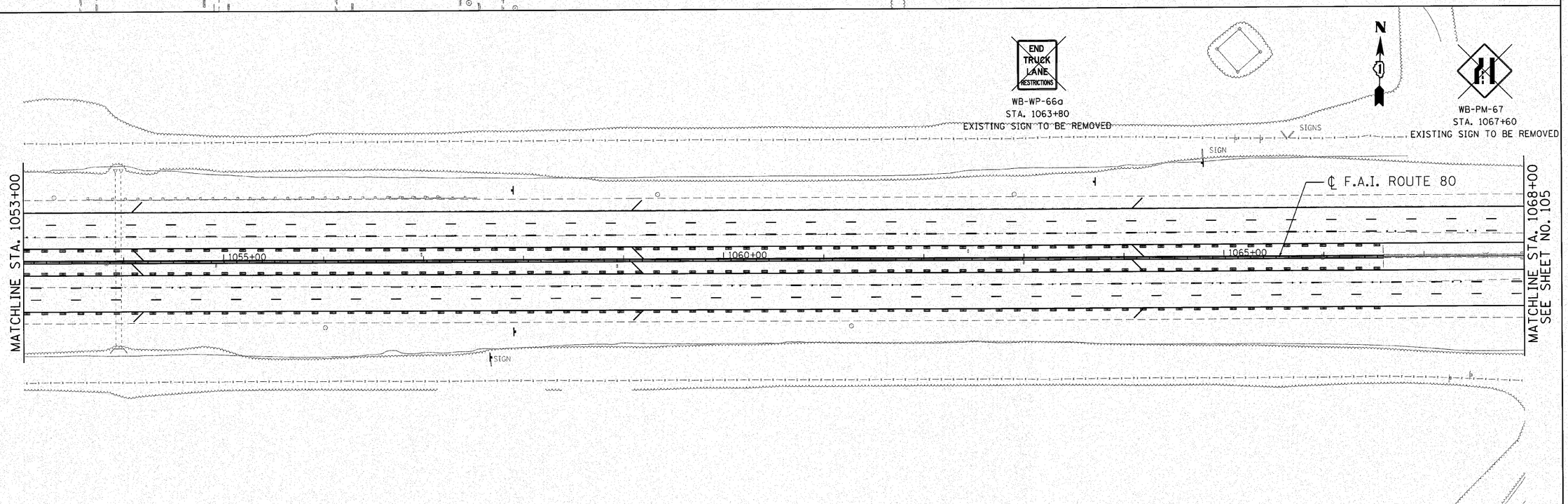

N:\PROJ\33844-2_West\Design\Striping-Signing\33844-Epmk12.dgn

ENGINEERING CONSULTANT					
Clorba Group, Inc. CONSULTING ENGINEERS 5607 North Cumberland Avenue, Suite 402 Chicago, Illinois 60656 Tel. 773.775.4009 Fax 773.775.4014 Email: chicago@clorba.com	USER NAME = jkjellman	DESIGNED - CRC	REVISED -	STATE OF ILLINOIS DEPARTMENT OF TRANSPORTATION	F.A.I. 80 FROM NS RAILROAD TO US 45 PAVEMENT MARKING AND SIGNING PLAN
		DRAWN - JMK	REVISED -		
	PLOT SCALE = 50.0000 ' / IN.	CHECKED - MRJ	REVISED -		
	PLOT DATE = 12/6/2010	DATE - 10/27/2010	REVISED -		SCALE: 1" = 50' SHEET NO. OF SHEETS STA. 1038+00 TO STA. 1068+00

F.A.I. RTE.	SECTION	COUNTY	TOTAL SHEETS	SHEET NO.
80	99-5-Y	WILL	276	104
		CONTRACT NO. 60147		
		ILLINOIS FED. AID PROJECT		

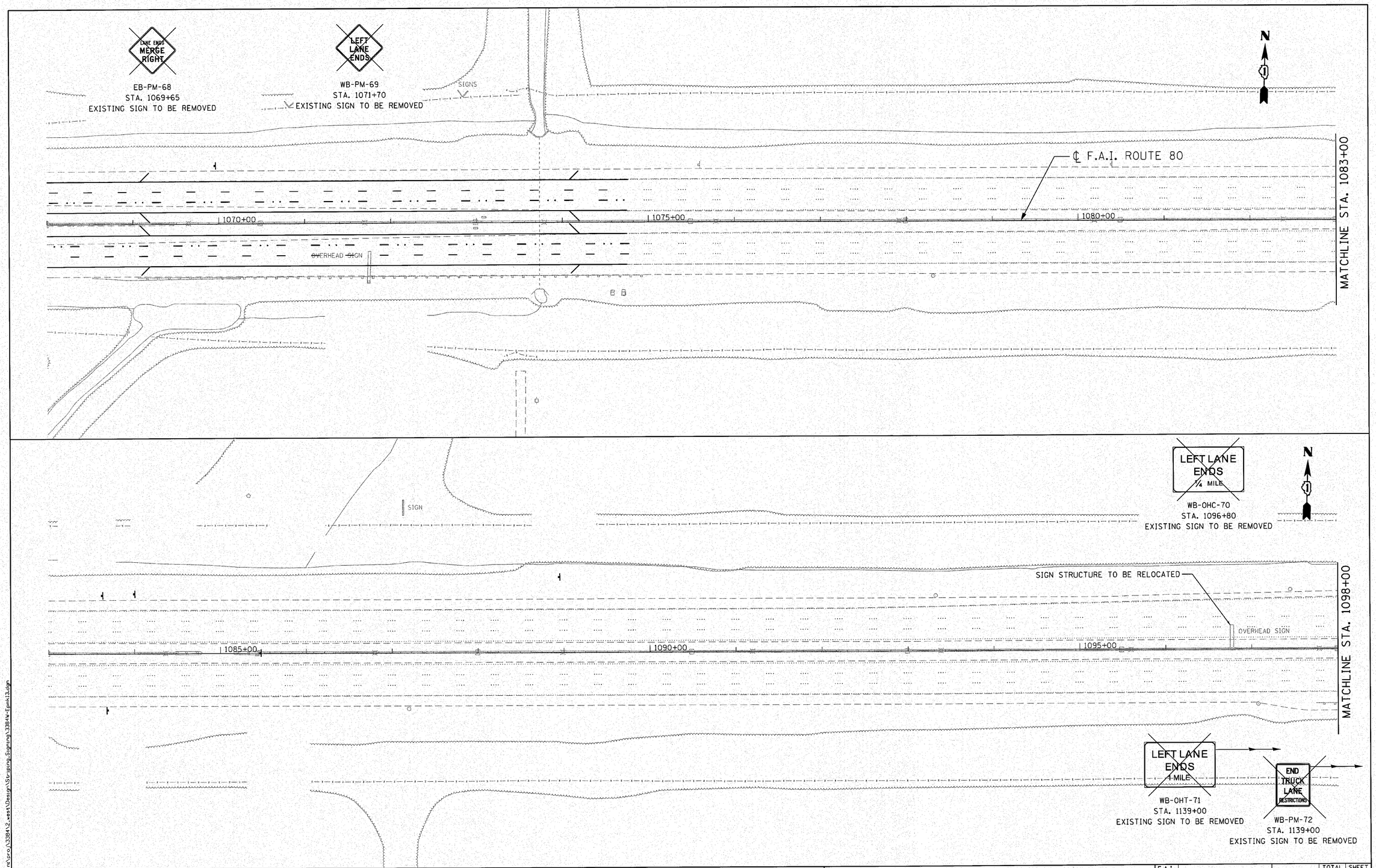

n:\proj\3384\2_west\Design\Striping\Signing\3384W-Epmk13.dgn

ENGINEERING CONSULTANT	USER NAME = jkjellman	DESIGNED - CRC	REVISED -	STATE OF ILLINOIS DEPARTMENT OF TRANSPORTATION	F.A.I. 80 FROM NS RAILROAD TO US 45 PAVEMENT MARKING AND SIGNING PLAN	F.A.I. RTE.	SECTION	COUNTY	TOTAL SHEETS	SHEET NO.
Ciorba Group, Inc. CONSULTING ENGINEERS 5507 North Cumberland Avenue, Suite 402 Chicago, Illinois 60656 Tel: 773.775.4009 Fax: 773.775.4014 Email: chicago@ciorba.com		DRAWN - JMK	REVISED -			80	99-5-Y	WILL	276	105
	PLOT SCALE = 50.0000 ' / IN.	CHECKED - MRJ	REVISED -			CONTRACT NO. 60147				
	PLOT DATE = 12/6/2010	DATE - 10/27/2010	REVISED -		SCALE: 1" = 50' SHEET NO. OF SHEETS STA. 1068+00 TO STA. 1074+75	ILLINOIS FED. AID PROJECT				

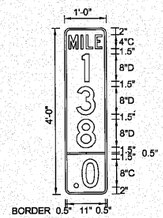

Panel Style: guide_fwy_reference.ssi
M.U.T.C.D.: 2009 Edition

EB-TS-02
STA. 713+80

WB-TS-38
STA. 713+80

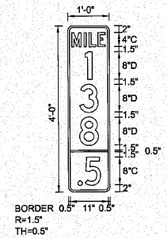

Panel Style: guide_fwy_reference.ssi
M.U.T.C.D.: 2009 Edition

EB-TS-08
STA. 740+20

WB-TS-46
STA. 740+20

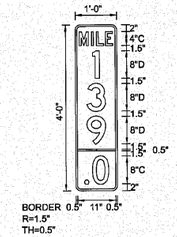

Panel Style: guide_fwy_reference.ssi
M.U.T.C.D.: 2009 Edition

EB-TS-15
STA. 768+10

WB-TS-51
STA. 768+10

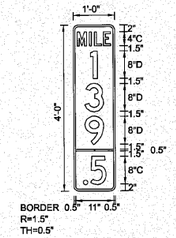

Panel Style: guide_fwy_reference.ssi
M.U.T.C.D.: 2009 Edition

EB-TS-19
STA. 794+50

WB-TS-53
STA. 794+50

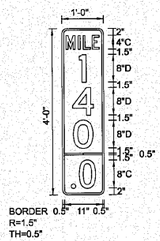

Panel Style: guide_fwy_reference.ssi
M.U.T.C.D.: 2009 Edition

EB-PM-25
STA. 823+70

WB-PM-57
STA. 823+70

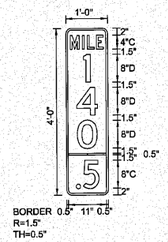

Panel Style: guide_fwy_reference.ssi
M.U.T.C.D.: 2009 Edition

EB-TS-28
STA. 850+10

WB-TS-62
STA. 850+10

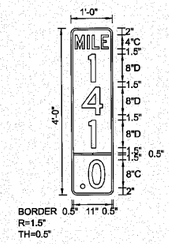

Panel Style: guide_fwy_reference.ssi
M.U.T.C.D.: 2009 Edition

EB-TS-34
STA. 872+50

WB-TS-66
STA. 872+50

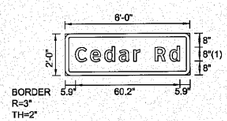

FONT:
(1) ClearviewHwy-5-W

Panel Style: guid_fwy_street name.ssi
M.U.T.C.D.: 2009 Edition

EB-WP-24
STA. 800+00

WB-WP-55
STA. 801+45

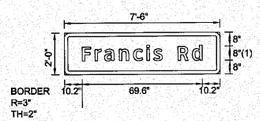

FONT:
(1) ClearviewHwy-5-W

Panel Style: guid_fwy_street name.ssi
M.U.T.C.D.: 2009 Edition

EB-WP-10
STA. 743+50

WB-WP-47
STA. 743+15

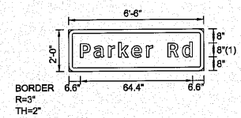

FONT:
(1) ClearviewHwy-5-W

Panel Style: guid_fwy_street name.ssi
M.U.T.C.D.: 2009 Edition

EB-TS-33
STA. 869+30

WB-TS-65
STA. 870+35

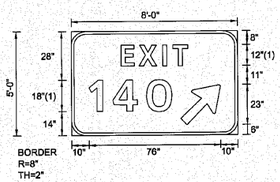

FONT:
(1) ClearviewHwy-5-W

Panel Style: guide_fwy_gore.ssi
M.U.T.C.D.: 2009 Edition

EB-WP-23
STA. 799+05

WB-WP-58
STA. 835+15

NOTE:
1. ALL SIGNS ON THIS SHEET ARE ON GREEN BACKGROUND WITH WHITE LEGEND AND BORDER.

FILE NAME =	DESIGNED - ST	REVISED -	LIN ENGINEERING, LTD. Consulting Engineers Chatham, Illinois · Westmont, Illinois	STATE OF ILLINOIS DEPARTMENT OF TRANSPORTATION	SIGNING DETAILS	F.A.-RTE.	SECTION	COUNTY	TOTAL SHEETS / SHEET NO.
N:\PROJ\3384\2_West\Design\Striping-Signing\DRAWN\signing-details.dgn	DRAWN -	REVISED -				80	99-5-Y	WILL	276 / 106
USER NAME = jkjellman	CHECKED - FML	REVISED -						CONTRACT NO. 60147	
PLOT DATE = 12/6/2010	DATE - 10/2010	REVISED -			SCALE: N.T.S. SHEET NO. __ OF __ SHEETS STA. _____ TO STA. _____	FED. ROAD DIST. NO. _	ILLINOIS	FED. AID PROJECT	

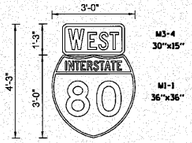

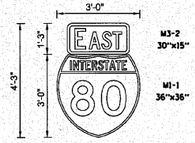

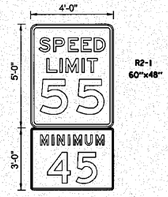

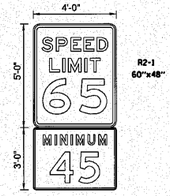

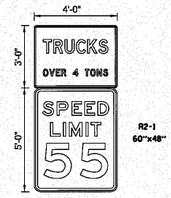

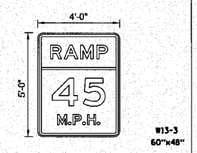

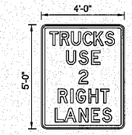

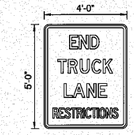

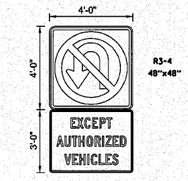

NAME	STATION	NAME	STATION	NAME	STATION	NAME	STATION	NAME	STATION	NAME	STATION	NAME	STATION	NAME	STATION	NAME	STATION		
WB-WP-52	787+80	EB-MP-05	721+40	WB-WP-36	710+90 (RT)	EB-WP-01	711+00	EB-WP-04	716+95	EB-PM-18	792+40	EB-WP-07a	727+00	WB-WP-37c	712+50	EB-TS-14	765+00		
		EB-PM-35	872+65	WB-WP-37	710+90 (LT)					WB-PM-61	840+00			WB-PM-74	778+15	WB-TS-50	765+00		

FILE NAME =	DESIGNED - ST	REVISED -
N:\PROJ\3384\2_West\Design\Striping_Signing\Signing\signing-detailsheets.dgn	DRAWN -	REVISED -
USER NAME = jkjellman	CHECKED - FML	REVISED -
PLOT DATE = 12/6/2010	DATE - 10/2010	REVISED -

LIN ENGINEERING,LTD.
Consulting Engineers
Chatham, Illinois Westmont, Illinois

STATE OF ILLINOIS
DEPARTMENT OF TRANSPORTATION

SIGNING DETAILS

SCALE: N.T.S. | SHEET NO. __ OF __ SHEETS | STA. _____ TO STA. _____

F.A. RTE.	SECTION	COUNTY	TOTAL SHEETS	SHEET NO.
80	99-5-Y	WILL	276	107

CONTRACT NO. 60147

FED. ROAD DIST. NO. _ | ILLINOIS | FED. AID PROJECT

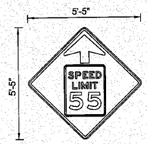

W3-5
48"x48"

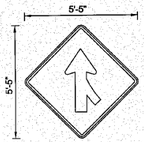

W4-1R
48"x48"

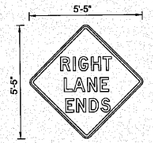

W9-1
48"x48"

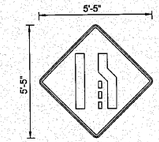

W4-2R
48"x48"

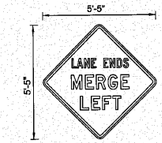

W9-2L
48"x48"

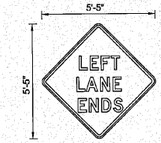

W9-1L
48"x48"

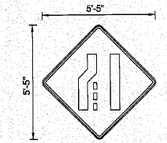

W4-2L
48"x48"

NAME	STATION	NAME	STATION	NAME	STATION	NAME	STATION	NAME	STATION	NAME	STATION	NAME	STATION
WB-TS-40A	718+40 (LT)	EB-PM-26	837+80	EB-PM-29	854+75	EB-PM-30	859+65	EB-PM-31	864+80	WB-TS-42	733+50	WB-TS-39	730+00
WB-TS-40B	718+40 (RT)	WB-PM-56	802+00										

FILE NAME = N:\PROJ\3384\2_West\Design\Striping_Signing\Signing-details-sheets.dgn	DESIGNED - ST	REVISED -
	DRAWN -	REVISED -
USER NAME = jkjellman	CHECKED - FML	REVISED -
PLOT DATE = 12/6/2010	DATE - 10/2010	REVISED -

LIN ENGINEERING, LTD.
Consulting Engineers
Chatham, Illinois Westmont, Illinois

STATE OF ILLINOIS
DEPARTMENT OF TRANSPORTATION

SIGNING DETAILS

SCALE: N.T.S. | SHEET NO. __ OF __ SHEETS | STA. _____ TO STA. _____

F.A.P. RTE.	SECTION	COUNTY	TOTAL SHEETS	SHEET NO.
80	99-5-Y	WILL	276	108

CONTRACT NO. 60147

FED. ROAD DIST. NO. _ | ILLINOIS | FED. AID PROJECT

SIGN DETAIL
1:75

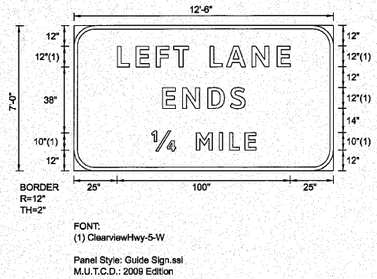

SIGN NUMBER	WB–OHC–45; STA. 737 + 50	
WIDTH x HGHT.	12'–6" x 7'–0"	
BORDER WIDTH	2"	
CORNER RADIUS	12"	
MOUNTING	Overhead	
BACKGROUND	TYPE:	Reflective
	COLOR:	Yellow
LEGEND/BORDER	TYPE:	Reflective
	COLOR:	Black / Black

SYMBOL	ROT	X	Y	WID	HT

Panel Style: Guide Sign.ssi
Dimensions are in inches.tenths

Letter locations are panel edge to lower left corner

LETTER POSITIONS (X)

								LENGTH	SERIES/SIZE
L	E	F	T	L	A	N	E		ClearviewHwy–5–W
25.2	36.1	47.8	57.8	78.5	88	102.7	117.3	99.7	12
E	N	D	S						ClearviewHwy–5–W
51.1	62.8	77.4	90.4					48	12
¼	M	I	L	E					ClearviewHwy–5–W
44.9	70.9	84	89.9	99				60.5	10

FILE NAME =	DESIGNED - ST	REVISED -
N:\PROJ\3384\2_West\Design\Striping_Signing\Signing-detailsheets.dgn	DRAWN - ST	REVISED -
USER NAME = jkjellman	CHECKED - FML	REVISED -
PLOT DATE = 12/6/2010	DATE - 10/2010	REVISED -

LIN ENGINEERING, LTD.
Consulting Engineers
Chatham, Illinois Westmont, Illinois

STATE OF ILLINOIS
DEPARTMENT OF TRANSPORTATION

SIGNING DETAILS

SCALE: N.T.S. | SHEET NO. __ OF __ SHEETS | STA. _____ TO STA. _____

F.A.-RTE.	SECTION	COUNTY	TOTAL SHEETS	SHEET NO.
80	99-5-Y	WILL	276	109

CONTRACT NO. 60I47

FED. ROAD DIST. NO. _ | ILLINOIS | FED. AID PROJECT

SIGN DETAIL
1:75

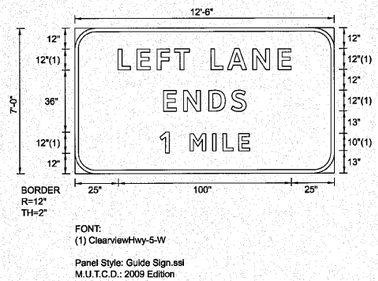

SIGN NUMBER	WB-OHC-73; STA. 778+10	
WIDTH x HGHT.	12'-6" x 7'-0"	
BORDER WIDTH	2"	
CORNER RADIUS	12"	
MOUNTING	Overhead	
BACKGROUND	TYPE:	Reflective
	COLOR:	Yellow
LEGEND/BORDER	TYPE:	Reflective
	COLOR:	Black / Black

SYMBOL	ROT	X	Y	WID	HT

Panel Style: Guide Sign.ssi
Dimensions are in inches.tenths

Letter locations are panel edge to lower left corner

LETTER POSITIONS (X)

								LENGTH	SERIES/SIZE
L	E	F	T	L	A	N	E		ClearviewHwy-5-W
25.1	35.9	47.6	57.7	78.6	88.1	102.8	117.5	100	12
E	N	D	S						ClearviewHwy-5-W
51.1	62.8	77.4	90.4					48	12
1	M	I	L	E					ClearviewHwy-5-W
49.2	66.6	79.7	85.6	94.7				51.9	12,10

FILE NAME =	DESIGNED - ST	REVISED -
N:\PROJ\3384\2_West\Design\Striping_Signing\Signing-details\sheets.dgn	DRAWN -	REVISED -
USER NAME = jkjellman	CHECKED - FML	REVISED -
PLOT DATE = 12/6/2010	DATE - 10/2010	REVISED -

LIN ENGINEERING, LTD.
Consulting Engineers
Chatham, Illinois Westmont, Illinois

STATE OF ILLINOIS
DEPARTMENT OF TRANSPORTATION

SIGNING DETAILS

SCALE: N.T.S. | SHEET NO. __ OF __ SHEETS | STA. _____ TO STA. _____

F.A.P. RTE.	SECTION	COUNTY	TOTAL SHEETS	SHEET NO.
80	99-5-Y	WILL	276	110

CONTRACT NO. 60147

FED. ROAD DIST. NO. _ | ILLINOIS | FED. AID PROJECT

SIGN DETAIL
1:75

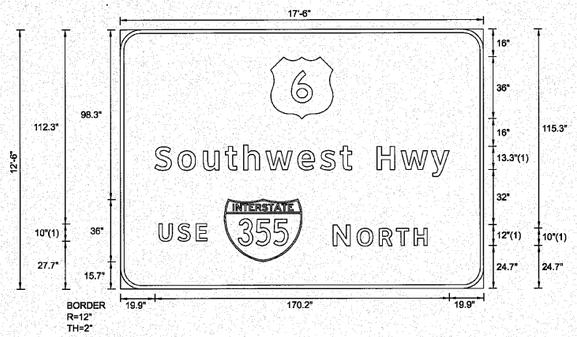

SIGN NUMBER	WB-BS-64; STA. 864+00	
WIDTH x HGHT.	17'-6" x 12'-6"	
BORDER WIDTH	2"	
CORNER RADIUS	12"	
MOUNTING	Ground	
BACKGROUND	TYPE:	Reflective
	COLOR:	Green
LEGEND/BORDER	TYPE:	Reflective
	COLOR:	White / White

SYMBOL	ROT	X	Y	WID	HT
M1_4	0	87	98	36	36
M1_1	0	60	15.6	45	36

Panel Style: Guide Sign.ssi
Dimensions are in inches.tenths

Letter locations are panel edge to lower left corner

LETTER POSITIONS (X)

														LENGTH	SERIES-SIZE
S	o	u	t	h	w	e	s	t		H	w	y			ClearviewHwy-5-W
19.9	33.2	48	60.8	71.3	84.1	102.5	115.8	127.2	133.7	148.5	162.4	179.7		170.2	13,3/10.8
U	S	E													ClearviewHwy-5-W
22.3	33.2	43.7												27.8	10
N	O	R	T	H											ClearviewHwy-5-W
123	136.8	149.6	159.6	169.7										54.3	12,10

FILE NAME =	DESIGNED - ST	REVISED -
N:\PROJ\3384\2_West\Design\Striping_Signing\Signing-details\sheets.dgn	DRAWN -	REVISED -
USER NAME = jkjollman	CHECKED - FML	REVISED -
PLOT DATE = 12/6/2010	DATE - 10/2010	REVISED -

LIN ENGINEERING, LTD.
Consulting Engineers
Chatham, Illinois Westmont, Illinois

STATE OF ILLINOIS
DEPARTMENT OF TRANSPORTATION

SIGNING DETAILS

SCALE: N.T.S. | SHEET NO. __ OF __ SHEETS | STA. _____ TO STA. _____

F.A. RTE.	SECTION	COUNTY	TOTAL SHEETS	SHEET NO.
80	99-5-Y	WILL	276	111
		CONTRACT NO. 60147		

FED. ROAD DIST. NO. _ | ILLINOIS | FED. AID PROJECT

SIGN DETAIL
1:75

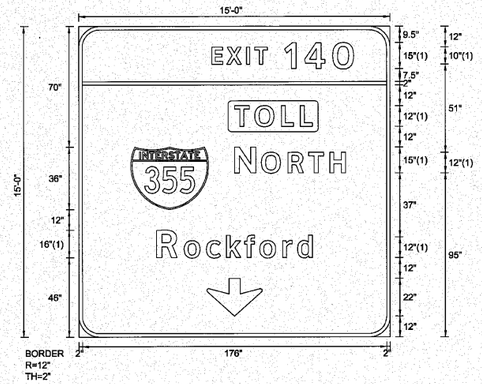

FONT:
(1) ClearviewHwy-5-W

Panel Style: Guide Sign.ssi
M.U.T.C.D.: 2009 Edition

SIGN NUMBER	WB-OHC-63; STA. 857+00	
WIDTH x HGHT.	15'-0" x 15'-0"	
BORDER WIDTH	2"	
CORNER RADIUS	12"	
MOUNTING	Overhead	
BACKGROUND	TYPE:	Reflective
	COLOR:	Green / Yellow
LEGEND/BORDER	TYPE:	Reflective
	COLOR:	White,Black /White

SYMBOL	ROT	X	Y	WID	HT
M1_1	0	30	74	45	36
ARDOWN	0	74	12	32	22

Panel Style: Guide Sign.ssi
Dimensions are in inches.tenths

Letter locations are panel edge to lower left corner

LETTER POSITIONS (X)

								LENGTH	SERIES-SIZE
E	X	I	T	1	4	0			ClearviewHwy-5-W
77	85.5	96.9	101.9	119	130.6	146.8		82	10,15
T	O	L	L						ClearviewHwy-5-W
90	101.8	117.2	128					45	12
N	O	R	T	H					ClearviewHwy-5-W
90	105.5	121	132.9	145.1				64.2	15,12
R	o	c	k	f	o	r	d		ClearviewHwy-5-W
45	60.9	73.7	85.3	95.9	104.6	117.9	126.4	90.1	16,12,9.8

FILE NAME = N:\PROJ\3384\2_West\Design\Striping_Signing\DRAWING\signing-details\sheets.dgn	DESIGNED - ST	REVISED -
USER NAME = jkjellman	CHECKED - FML	REVISED -
PLOT DATE = 12/6/2010	DATE - 10/2010	REVISED -

LIN ENGINEERING, LTD.
Consulting Engineers
Chatham, Illinois Westmont, Illinois

STATE OF ILLINOIS
DEPARTMENT OF TRANSPORTATION

SIGNING DETAILS

SCALE: N.T.S. | SHEET NO. __ OF __ SHEETS | STA. _____ TO STA. _____

F.A.-. RTE.	SECTION	COUNTY	TOTAL SHEETS	SHEET NO.
80	99-5-Y	WILL	276	112
		CONTRACT NO. 60147		

FED. ROAD DIST. NO. _ | ILLINOIS | FED. AID PROJECT

SIGN DETAIL
1:75

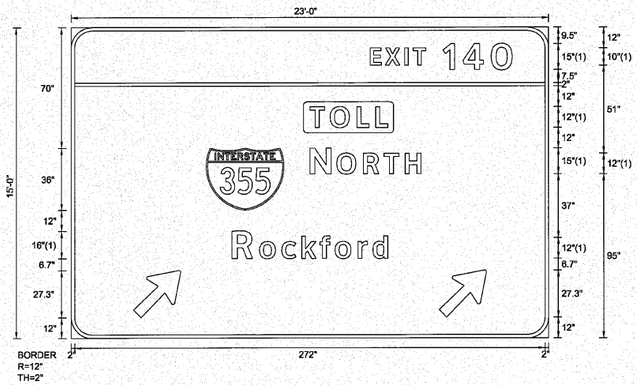

SIGN NUMBER	WB–OHT–60; STA. 839 + 88	
WIDTH x HGHT.	23'–0" x 15'–0"	
BORDER WIDTH	2"	
CORNER RADIUS	12"	
MOUNTING	Overhead	
BACKGROUND	TYPE:	Reflective
	COLOR:	Green / Yellow
LEGEND/BORDER	TYPE:	Reflective
	COLOR:	White,Black /White

SYMBOL	ROT	X	Y	WID	HT
M1_1	0	78	74	45	36
ARMED	45	36	12	22.3	35.1
ARMED	45	212.8	12	22.3	35.1

Panel Style: Guide Sign.ssi
Dimensions are in inches.tenths

Letter locations are panel edge to lower left corner

LETTER POSITIONS (X)

																																						LENGTH	SERIES/SIZE
E	X	I	T	1	4	0																																	ClearviewHwy-5-W
173	181.5	192.9	197.9	215.1	226.6	242.8																																82	10,15
T	O	L	L																																				ClearviewHwy-5-W
138	149.8	165.2	176																																			45	12
N	O	R	T	H																																			ClearviewHwy-5-W
138	153.5	169	180.9	193.1																																		64.2	15,12
R	o	c	k	f	o	r	d																																ClearviewHwy-5-W
93	108.9	121.7	133.3	143.9	152.6	165.9	174.4																															90.1	16,129.8

FILE NAME =	DESIGNED - ST	REVISED -
N:\PROJ\3384\2.West\Design\Striping.Signing\Signing-details\sheets.dgn	DRAWN -	REVISED -
USER NAME = jkjellman	CHECKED - FML	REVISED -
PLOT DATE = 12/6/2010	DATE - 10/2010	REVISED -

LIN ENGINEERING, LTD.
Consulting Engineers
Chatham, Illinois Westmont, Illinois

STATE OF ILLINOIS
DEPARTMENT OF TRANSPORTATION

SIGNING DETAILS

SCALE: N.T.S. | SHEET NO. __ OF __ SHEETS | STA. _____ TO STA. _____

F.A.-RTE.	SECTION	COUNTY	TOTAL SHEETS	SHEET NO.
80	99-5-Y	WILL	276	113
		CONTRACT NO. 60147		

FED. ROAD DIST. NO. _ | ILLINOIS | FED. AID PROJECT

SIGN DETAIL
1:75

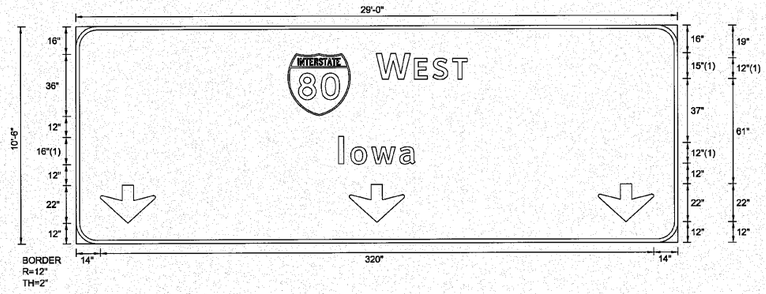

FONT:
(1) ClearviewHwy-5-W

Panel Style: Guide Sign.ssi
M.U.T.C.D.: 2009 Edition

Panel Style: Guide Sign.ssi
Dimensions are in inches.tenths

Letter locations are panel edge to lower left corner

SIGN NUMBER	WB-OHT-59; STA. 839+88
WIDTH x HGHT.	29'-0" x 10'-6"
BORDER WIDTH	2"
CORNER RADIUS	12"
MOUNTING	Overhead
BACKGROUND	TYPE: Reflective
	COLOR: Green
LEGEND/BORDER	TYPE: Reflective
	COLOR: White / White

SYMBOL	ROT	X	Y	WID	HT
M1_1	0	122.7	73.9	36	36
ARDOWN	0	14	12	32	22
ARDOWN	0	158	12	32	22
ARDOWN	0	302	12	32	22

LETTER POSITIONS (X)

				LENGTH	SERIES/SIZE
W	E	S	T		ClearviewHwy-5-W
173.7	195.7	206.5	217.9	52.8	15,12
I	o	w	a		ClearviewHwy-5-W
151.9	159	171	187.3	44.3	16,12/9.8

FILE NAME =	DESIGNED - ST	REVISED -
N:\PROJ\3384\2_West\Design\Striping_Signing\Signing-details\sheets.dgn	DRAWN - EJ	REVISED -
USER NAME = jkjellman	CHECKED - FML	REVISED -
PLOT DATE = 12/6/2010	DATE - 10/2010	REVISED -

LIN ENGINEERING, LTD.
Consulting Engineers
Chatham, Illinois Westmont, Illinois

STATE OF ILLINOIS
DEPARTMENT OF TRANSPORTATION

SIGNING DETAILS

SCALE: N.T.S. | SHEET NO. __ OF __ SHEETS | STA. _____ TO STA. _____

F.A. RTE.	SECTION	COUNTY	TOTAL SHEETS	SHEET NO.
80	99-5-Y	WILL	276	114

CONTRACT NO. 60147

FED. ROAD DIST. NO. _ | ILLINOIS | FED. AID PROJECT

SIGN DETAIL

1:75

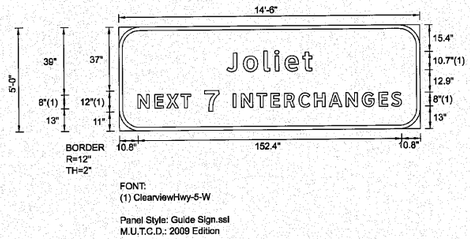

SIGN NUMBER	WB-BS-54; STA. 797+50	
WIDTH x HGHT.	14'-6" x 5'-0"	
BORDER WIDTH	2"	
CORNER RADIUS	12"	
MOUNTING	Ground	
BACKGROUND	TYPE:	Reflective
	COLOR:	Green
LEGEND/BORDER	TYPE:	Reflective
	COLOR:	White / White

SYMBOL	ROT	X	Y	WID	HT

Panel Style: Guide Sign.ssi

Dimensions are in inches.tenths

Letter locations are panel edge to lower left corner

LETTER POSITIONS (X)

																		LENGTH	SERIES-SIZE
J	o	l	i	e	t														ClearviewHwy-5-W
62.4	72	83.8	90.2	96	106.4													49.3	10.7/8.7
N	E	X	T	7	I	N	T	E	R	C	H	A	N	G	E	S			ClearviewHwy-5-W
10.8	20.5	27.4	35.7	49.4	65.9	70.6	79.6	87.7	95.5	103.9	112.9	121.3	131.1	140.5	150.3	157.5		152.5	8,12

FILE NAME = N:\PROJ\3384\2_West\Design\Striping_Signing\Signing-details\sheets.dgn	DESIGNED - ST	REVISED -
	DRAWN - GT	REVISED -
USER NAME = jkjellman	CHECKED - FML	REVISED -
PLOT DATE = 12/6/2010	DATE - 10/2010	REVISED -

LIN ENGINEERING, LTD.
Consulting Engineers
Chatham, Illinois Westmont, Illinois

STATE OF ILLINOIS
DEPARTMENT OF TRANSPORTATION

SIGNING DETAILS

SCALE: N.T.S. | SHEET NO. __ OF __ SHEETS | STA. _____ TO STA. _____

F.A. RTE.	SECTION	COUNTY	TOTAL SHEETS	SHEET NO.
80	99-5-Y	WILL	276	115

CONTRACT NO. 60147

FED. ROAD DIST. NO. _ | ILLINOIS | FED. AID PROJECT

SIGN DETAIL
1:75

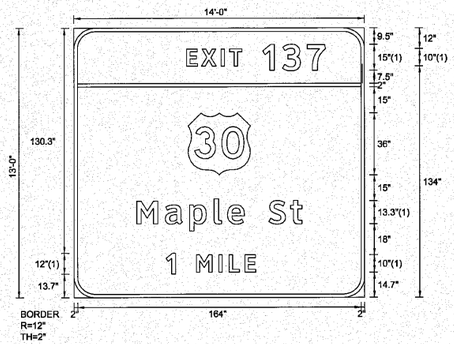

FONT:
(1) ClearviewHwy-5-W

Panel Style: Guide Sign.ssi
M.U.T.C.D.: 2009 Edition

SIGN NUMBER	WB-BS-48; STA. 747+00	
WIDTH x HGHT.	14'-0" x 13'-0"	
BORDER WIDTH	2"	
CORNER RADIUS	12"	
MOUNTING	Ground	
BACKGROUND	TYPE:	Reflective
	COLOR:	Green
LEGEND/BORDER	TYPE:	Reflective
	COLOR:	White / White

SYMBOL	ROT	X	Y	WID	HT
M1_4	0	66	71	36	36

Panel Style: Guide Sign.ssi
Dimensions are in inches.tenths

Letter locations are panel edge to lower left corner

LETTER POSITIONS (X)

																																				LENGTH	SERIES/SIZE
E	X	I	T	1	3	7																															ClearviewHwy-5-W
65.2	73.7	85.1	90.1	109.3	120.6	134.9																														80.3	10,15
M	a	p	l	e		S	t																														ClearviewHwy-5-W
36.2	52.8	66.9	81	88.7	98.5	112.7	125.2																													95.6	13.3/10.8
1	M	I	L	E																																	ClearviewHwy-5-W
53.3	70.7	83.8	89.7	98.8																																51.9	12,10

FILE NAME =	DESIGNED - ST	REVISED -
N:\PROJ\3384\2_West\Design\Striping_Signing\DRAWING\signing-details\sheets.dgn	DRAWN -	REVISED -
USER NAME = jkjellman	CHECKED - FML	REVISED -
PLOT DATE = 12/6/2010	DATE - 10/2010	REVISED -

LIN ENGINEERING, LTD.
Consulting Engineers
Chatham, Illinois Westmont, Illinois

STATE OF ILLINOIS
DEPARTMENT OF TRANSPORTATION

SIGNING DETAILS

SCALE: N.T.S. | SHEET NO. __ OF __ SHEETS | STA. _____ TO STA. _____

F.A.P. RTE.	SECTION	COUNTY	TOTAL SHEETS	SHEET NO.
80	99-5-Y	WILL	276	116
		CONTRACT NO. 60147		

FED. ROAD DIST. NO. _ | ILLINOIS | FED. AID PROJECT

SIGN DETAIL
1:75

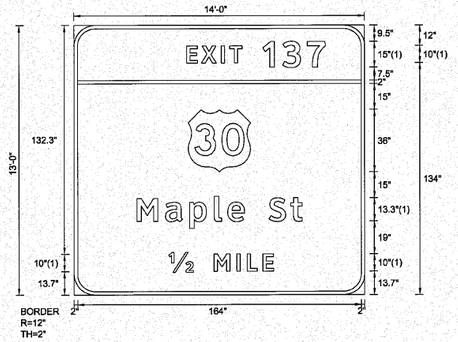

FONT:
(1) ClearviewHwy-5-W

Panel Style: Guide Sign.ssi
M.U.T.C.D.: 2003 Edition

SIGN NUMBER	WB-BS-41; STA. 719 + 80	
WIDTH x HGHT.	14'-0" x 13'-0"	
BORDER WIDTH	2"	
CORNER RADIUS	12"	
MOUNTING	Ground	
BACKGROUND	TYPE:	Reflective
	COLOR:	Green
LEGEND/BORDER	TYPE:	Reflective
	COLOR:	White / White

SYMBOL	ROT	X	Y	WID	HT
M1_4	0	66	71	36	36

Panel Style: Guide Sign.ssi
Dimensions are in inches.tenths

Letter locations are panel edge to lower left corner

LETTER POSITIONS (X)

																																						LENGTH	SERIES/SIZE
E	X	I	T	1	3	7																																	ClearviewHwy-5-W
65.2	73.7	85.1	90.1	109.3	120.6	134.9																																80.3	10,15
M	a	p	l	e		S	t																																ClearviewHwy-5-W
36.2	52.8	66.9	81	88.7	98.5	112.7	125.2																															95.6	13.3/10.8
½	M	I	L	E																																			ClearviewHwy-5-W
54.7	80.9	94	100	109																																		60.7	10

FILE NAME = N:\PROJ\3384\2_West\Design\Striping_Signing\Signing-details\sheets.dgn	DESIGNED - ST	REVISED -
	DRAWN -	REVISED -
USER NAME = jk_jellman	CHECKED - FML	REVISED -
PLOT DATE = 12/6/2010	DATE - 10/2010	REVISED -

LIN ENGINEERING, LTD.
Consulting Engineers
Chatham, Illinois Westmont, Illinois

STATE OF ILLINOIS
DEPARTMENT OF TRANSPORTATION

SIGNING DETAILS

SCALE: N.T.S. | SHEET NO. __ OF __ SHEETS | STA. _____ TO STA. _____

F.A.P. RTE.	SECTION	COUNTY	TOTAL SHEETS	SHEET NO.
80	99-5-Y	WILL	276	117
		CONTRACT NO. 60147		

FED. ROAD DIST. NO. _ | ILLINOIS | FED. AID PROJECT

SIGN DETAIL
1:75

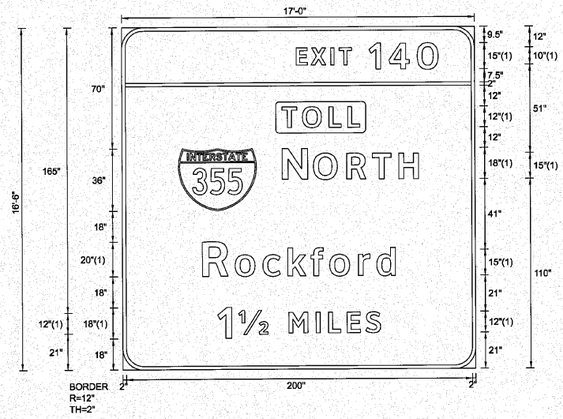

SIGN NUMBER	EB-BS-03; STA. 715+50		
WIDTH x HGHT.	17'-0" x 16'-6"		
BORDER WIDTH	2"		
CORNER RADIUS	12"		
MOUNTING	Ground		
BACKGROUND	TYPE:	Reflective	
	COLOR:	Green / Yellow	
LEGEND/BORDER	TYPE:	Reflective	
	COLOR:	White,Black /White	

SYMBOL	ROT	X	Y	WID	HT
M1_1	0	32.6	92	45	36

Panel Style: Guide Sign.ssi
Dimensions are in inches.tenths

Letter locations are panel edge to lower left corner

LETTER POSITIONS (X)

								LENGTH	SERIES-SIZE
E	X	I	T	1	4	0			Clearview Hwy-5-W
101	109.5	120.9	125.9	143	154.6	170.8		82	10,15
T	O	L	L						Clearview Hwy-5-W
92.6	104.3	119.7	130.6					45	12
N	O	R	T	H					Clearview Hwy-5-W
92.6	110.5	129.8	144.7	160				78.9	18,15
R	o	c	k	f	o	r	d		Clearview Hwy-5-W
46.2	65.1	81.1	95.6	108.8	119.7	136.4	147	111.6	20,15 12.2
1	12	M	I	L	E	S			Clearview Hwy-5-W
54.9	67	96	111.8	118.9	129.7	140.5		94.3	18,12

FILE NAME = N:\PROJ\3384\2_West\Design\Striping_Signing\DSGN\signing-details-sheets.dgn	DESIGNED - ST	REVISED -
	DRAWN -	REVISED -
USER NAME = jkjellman	CHECKED - FML	REVISED -
PLOT DATE = 12/6/2010	DATE - 10/2010	REVISED -

LIN ENGINEERING, LTD.
Consulting Engineers
Chatham, Illinois Westmont, Illinois

STATE OF ILLINOIS
DEPARTMENT OF TRANSPORTATION

SIGNING DETAILS

SCALE: N.T.S. | SHEET NO. __ OF __ SHEETS | STA. _____ TO STA. _____

F.A. RTE.	SECTION	COUNTY	TOTAL SHEETS	SHEET NO.
80	99-5-Y	WILL	276	118

CONTRACT NO. 60147

FED. ROAD DIST. NO. _ | ILLINOIS | FED. AID PROJECT

SIGN DETAIL
1:75

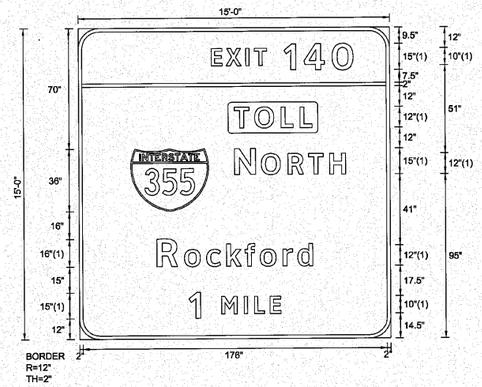

FONT:
(1) ClearviewHwy-5-W

Panel Style: Guide Sign.ssi
M.U.T.C.D.: 2009 Edition

Panel Style: Guide Sign.ssi
Dimensions are in inches.tenths

SIGN NUMBER	EB-OHC-09; STA. 742+25
WIDTH x HGHT.	15'-0" x 15'-0"
BORDER WIDTH	2"
CORNER RADIUS	12"
MOUNTING	Overhead
BACKGROUND	TYPE: Reflective
	COLOR: Green / Yellow
LEGEND/BORDER	TYPE: Reflective
	COLOR: White,Black /White

SYMBOL	ROT	X	Y	WID	HT
M1_1	0	30	74	45	36

Letter locations are panel edge to lower left corner

LETTER POSITIONS (X)

								LENGTH	SERIES-SIZE
E	X	I	T	1	4	0			ClearviewHwy-5-W
77	85.5	96.9	101.9	119	130.6	146.8		82	10,15
T	O	L	L						ClearviewHwy-5-W
90	101.8	117.2	128					45	12
N	O	R	T	H					ClearviewHwy-5-W
90	105.5	120.9	132.9	145.1				64.2	15,12
R	o	c	k	f	o	r	d		ClearviewHwy-5-W
44.9	60.9	73.7	85.3	95.9	104.6	117.9	126.4	90.1	16,12,9.8
1	M	I	L	E					ClearviewHwy-5-W
63.4	82.2	95.3	101.2	110.3				53.2	15,10

FILE NAME = N:\PROJ\3384\2_West\Design\Striping.Signing\Signing-details\sheets.dgn	DESIGNED - ST	REVISED -
USER NAME = jkjellman	DRAWN -	REVISED -
	CHECKED - FML	REVISED -
PLOT DATE = 12/6/2010	DATE - 10/2010	REVISED -

LIN ENGINEERING,LTD.
Consulting Engineers
Chatham, Illinois Westmont, Illinois

STATE OF ILLINOIS
DEPARTMENT OF TRANSPORTATION

SIGNING DETAILS

SCALE: N.T.S. | SHEET NO. __ OF __ SHEETS | STA. _____ TO STA. _____

F.A. RTE.	SECTION	COUNTY	TOTAL SHEETS	SHEET NO.
80	99-5-Y	WILL	276	119

CONTRACT NO. 60147

FED. ROAD DIST. NO. _ | ILLINOIS | FED. AID PROJECT

SIGN DETAIL
1:75

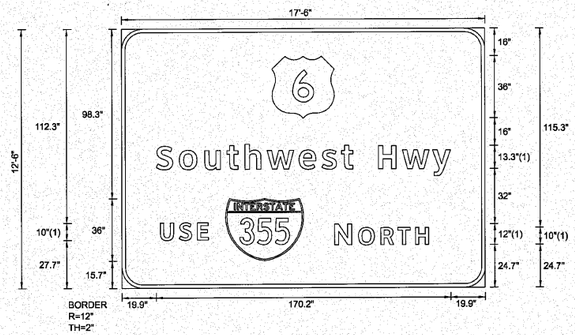

FONT:
(1) ClearviewHwy-5-W

Panel Style: Guide Sign.ssi
M.U.T.C.D.: 2009 Edition

SIGN NUMBER	EB-BS-13; STA. 754+80	
WIDTH x HGHT.	17'-6" x 12'-6"	
BORDER WIDTH	2"	
CORNER RADIUS	12"	
MOUNTING	Ground	
BACKGROUND	TYPE:	Reflective
	COLOR:	Green
LEGEND/BORDER	TYPE:	Reflective
	COLOR:	White / White

SYMBOL	ROT	X	Y	WID	HT
M1_4	0	87	98	36	36
M1_1	0	60	15.6	45	36

Panel Style: Guide Sign.ssi
Dimensions are in inches.tenths

Letter locations are panel edge to lower left corner

LETTER POSITIONS (X)

																																					LENGTH	SERIES-SIZE
S	o	u	t	h	w	e	s	t		H	w	y																										ClearviewHwy-5-W
19.9	33.2	48	60.8	71.3	84.1	102.5	115.8	127.2	133.7	148.5	162.4	179.7																									170.2	13.3/10.8
U	S	E																																				ClearviewHwy-5-W
22.3	33.2	43.7																																			27.8	10
N	O	R	T	H																																		ClearviewHwy-5-W
123	136.8	149.6	159.6	169.7																																	54.3	12,10

FILE NAME =	DESIGNED - ST	REVISED -
N:\PROJ\3384\2_West\Design\Striping_Signing\Signing-details\sheets.dgn	DRAWN - ST	REVISED -
USER NAME = jkjellman	CHECKED - FML	REVISED -
PLOT DATE = 12/6/2010	DATE - 10/2010	REVISED -

LIN ENGINEERING, LTD.
Consulting Engineers
Chatham, Illinois Westmont, Illinois

STATE OF ILLINOIS
DEPARTMENT OF TRANSPORTATION

SIGNING DETAILS

SCALE: N.T.S. | SHEET NO. __ OF __ SHEETS | STA. _____ TO STA. _____

F.A. RTE.	SECTION	COUNTY	TOTAL SHEETS	SHEET NO.
80	99-5-Y	WILL	276	120
		CONTRACT NO. 60147		
FED. ROAD DIST. NO. _	ILLINOIS	FED. AID PROJECT		

SIGN DETAIL
1:75

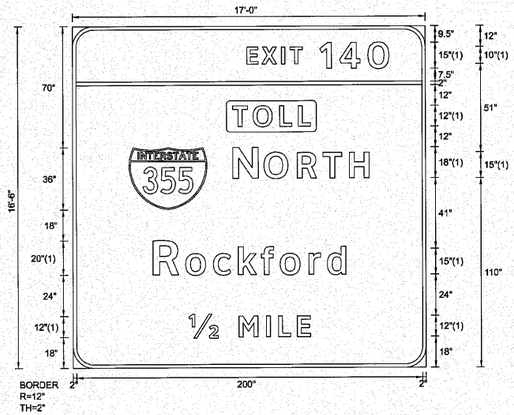

SIGN NUMBER	EB-BS-16; STA. 768+50	
WIDTH x HGHT.	17'-0" x 16'-6"	
BORDER WIDTH	2"	
CORNER RADIUS	12"	
MOUNTING	Ground	
BACKGROUND	TYPE:	Reflective
	COLOR:	Green / Yellow
LEGEND/BORDER	TYPE:	Reflective
	COLOR:	White,Black /White

SYMBOL	ROT	X	Y	WID	HT
M1_1	0	32.6	92	45	36

Panel Style: Guide Sign.ssi
Dimensions are in inches.tenths

Letter locations are panel edge to lower left corner

LETTER POSITIONS (X)

								LENGTH	SERIES-SIZE
E	X	I	T	1	4	0			ClearviewHwy-5-W
101	109.5	120.9	125.9	143	154.6	170.8		82	10,15
T	O	L	L						ClearviewHwy-5-W
92.6	104.3	119.7	130.6					45	12
N	O	R	T	H					ClearviewHwy-5-W
92.6	110.5	129.8	144.7	160				78.9	18,15
R	o	c	k	f	o	r	d		ClearviewHwy-5-W
46.2	65.1	81.1	95.6	108.8	119.8	136.4	147	111.6	20,15,12.2
1/2	M	I	L	E					ClearviewHwy-5-W
66.8	95.9	111.6	118.8	129.6				70.4	12

FILE NAME = N:\PROJ\3384\2_West\Design\Striping_Signing\DRAWN\signing-details-sheets.dgn	DESIGNED - ST	REVISED -
	DRAWN - GL	REVISED -
USER NAME = jkjellman	CHECKED - FML	REVISED -
PLOT DATE = 12/6/2010	DATE - 10/2010	REVISED -

LIN ENGINEERING, LTD.
Consulting Engineers
Chatham, Illinois Westmont, Illinois

STATE OF ILLINOIS
DEPARTMENT OF TRANSPORTATION

SIGNING DETAILS

SCALE: N.T.S. | SHEET NO. __ OF __ SHEETS | STA. _____ TO STA. _____

F.A.-RTE.	SECTION	COUNTY	TOTAL SHEETS	SHEET NO.
80	99-5-Y	WILL	276	121
		CONTRACT NO. 60147		

FED. ROAD DIST. NO. _ | ILLINOIS | FED. AID PROJECT

SIGN DETAIL

1:75

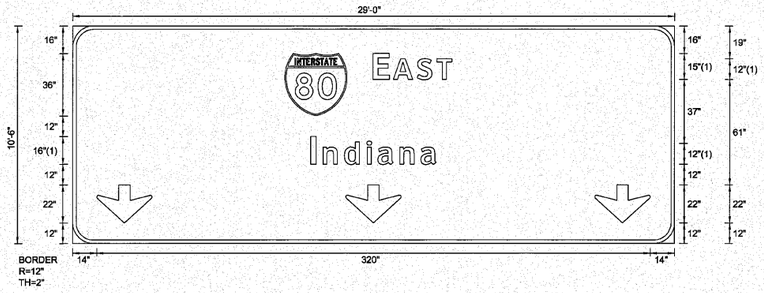

FONT:
(1) ClearviewHwy-5-W

Panel Style: Guide Sign.ssi
M.U.T.C.D.: 2009 Edition

Panel Style: Guide Sign.ssi
Dimensions are in inches.tenths

Letter locations are panel edge to lower left corner

SIGN NUMBER	EB-0HT-20; STA. 795+35
WIDTH x HGHT.	29'-0" x 10'-6"
BORDER WIDTH	2"
CORNER RADIUS	12"
MOUNTING	Overhead
BACKGROUND	TYPE: Reflective
	COLOR: Green
LEGEND/BORDER	TYPE: Reflective
	COLOR: White / White

SYMBOL	ROT	X	Y	WID	HT
M1_1	0	122.7	73.9	36	36
ARDOWN	0	14	12	32	22
ARDOWN	0	158	12	32	22
ARDOWN	0	302	12	32	22

LETTER POSITIONS (X)

																																						LENGTH	SERIES/SIZE
E	A	S	T																																				ClearviewHwy-5-W
173.7	185.4	199.2	210.6																																			45.5	15,12
I	n	d	i	a	n	a																																	ClearviewHwy-5-W
137.8	144.9	157.2	170.2	176.6	189.3	201.4																																72.5	16,12/9.8

FILE NAME = N:\PROJ\3384\2_West\Design\Striping_Signing\DRAWING\signing-details-sheets.dgn	DESIGNED - ST	REVISED -
	DRAWN - ST	REVISED -
USER NAME = jkjellman	CHECKED - FML	REVISED -
PLOT DATE = 12/6/2010	DATE - 10/2010	REVISED -

LIN ENGINEERING, LTD.
Consulting Engineers
Chatham, Illinois Westmont, Illinois

STATE OF ILLINOIS
DEPARTMENT OF TRANSPORTATION

SIGNING DETAILS

SCALE: N.T.S. | SHEET NO. __ OF __ SHEETS | STA. _____ TO STA. _____

F.A.P. RTE.	SECTION	COUNTY	TOTAL SHEETS	SHEET NO.
80	99-5-Y	WILL	276	122

CONTRACT NO. 60147

FED. ROAD DIST. NO. _ | ILLINOIS | FED. AID PROJECT

SIGN DETAIL
1:75

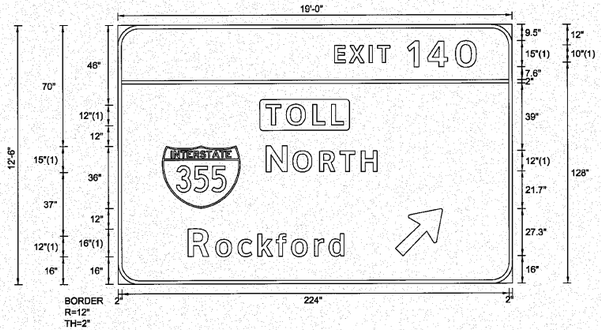

FONT:
(1) ClearviewHwy-5-W

Panel Style: Guide Sign.ssi
M.U.T.C.D.: 2009 Edition

Panel Style: Guide Sign.ssi
Dimensions are in inches.tenths

SIGN NUMBER	EB-OHT-21; STA. 795+35
WIDTH x HGHT.	19'-0" x 12'-6"
BORDER WIDTH	2"
CORNER RADIUS	12"
MOUNTING	Overhead
BACKGROUND	TYPE: Reflective
	COLOR: Green / Yellow
LEGEND/BORDER	TYPE: Reflective
	COLOR: White,Black /White

SYMBOL	ROT	X	Y	WID	HT
M1_1	0	25.5	44	45	36
ARMED	45	160.3	16	22.3	35.1

Letter locations are panel edge to lower left corner

LETTER POSITIONS (X)

																																				LENGTH	SERIES/SIZE
E	X	I	T	1	4	0																															ClearviewHwy-5-W
125.3	133.9	145.3	150.2	167.4	178.9	195.2																														82	10,15
T	O	L	L																																		ClearviewHwy-5-W
85.6	97.3	112.7	123.6																																	45	12
N	O	R	T	H																																	ClearviewHwy-5-W
85.6	101	116.5	128.4	140.6																																64.2	15,12
R	o	c	k	f	o	r	d																														ClearviewHwy-5-W
40.5	56.4	69.2	80.8	91.4	100.1	113.4	121.9																													90.1	16,12/9.8

FILE NAME =	DESIGNED - ST	REVISED -
N:\PROJ\3384\2_West\Design\Striping_Signing\Signing-details\sheets.dgn	DRAWN - SJ	REVISED -
USER NAME = jkjellman	CHECKED - FML	REVISED -
PLOT DATE = 12/6/2010	DATE - 10/2010	REVISED -

LIN ENGINEERING, LTD.
Consulting Engineers
Chatham, Illinois Westmont, Illinois

STATE OF ILLINOIS
DEPARTMENT OF TRANSPORTATION

SIGNING DETAILS

SCALE: N.T.S. | SHEET NO. __ OF __ SHEETS | STA. _____ TO STA. _____

F.A. RTE.	SECTION	COUNTY	TOTAL SHEETS	SHEET NO.
80	99-5-Y	WILL	276	123
		CONTRACT NO. 60I47		

FED. ROAD DIST. NO. _ | ILLINOIS | FED. AID PROJECT

Structure Number	Station	Design Truss Type	Cantilever Length (L)	Elev. A	Dim. D	D_s	Total Sign Area
1C099 1080L138.4	737+50	II-C-A	±23'-0"			8'-0"	88 sq. ft.

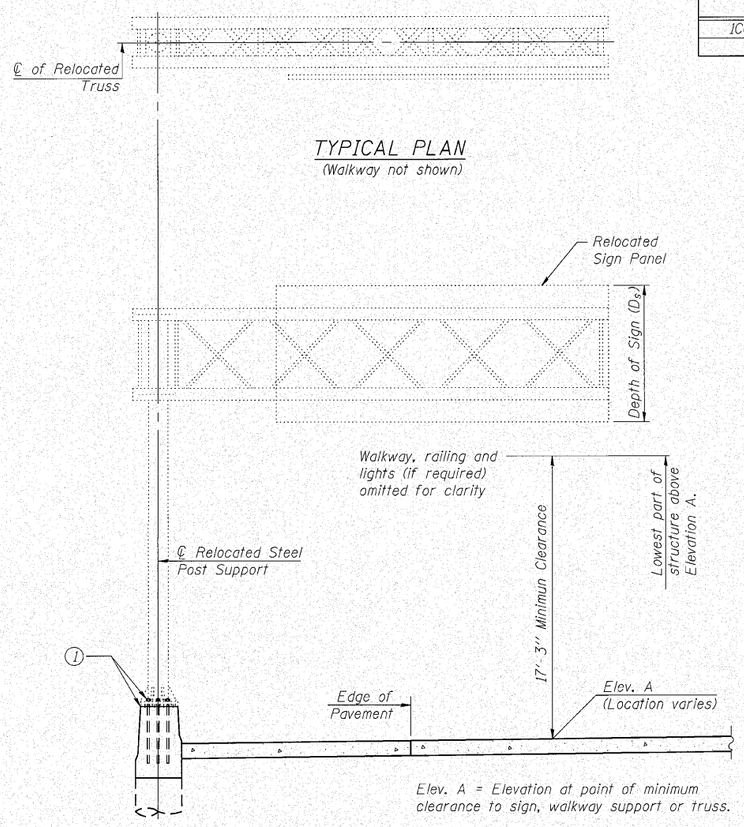

TYPICAL PLAN
(Walkway not shown)

Elev. A = Elevation at point of minimum clearance to sign, walkway support or truss.

TYPICAL ELEVATION
Looking in Direction of Traffic

Sign support structures may be subject to damaging vibrations and oscillations when sign panels are not in place during erection or maintenance of the structure. To avoid these vibrations and oscillations, consideration should be given to attaching temporary blank sign panels to the structure.

Truss Type	Maximum Sign Area	Maximum Length
I-C-A	170 Sq. Ft.	25 Ft.
II-C-A	340 Sq. Ft.	30 Ft.
III-C-A	400 Sq. Ft.	40 Ft.

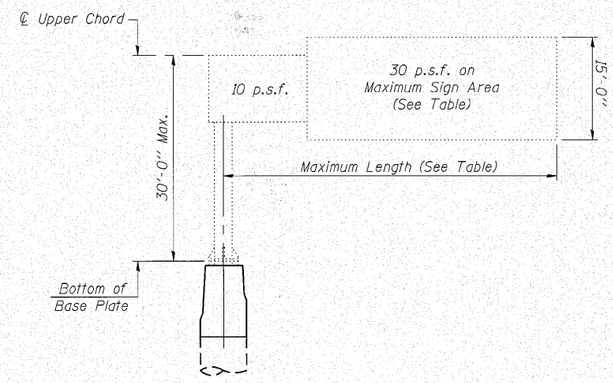

DESIGN WIND LOADING DIAGRAM

Parameters shown are basis for I.D.O.T. Standards Installations not within dimensional limits shown require special analysis for all components.

Note:
Trusses shall be shipped individually with adequate provision to prevent detrimental motion during transport. This may require ropes between horizontals and diagonals or energy dissipating (elastic) ties to the vehicle. The contractor is responsible for maintaining the configuration and protection of the trusses.

(1) After adjustments to level truss and insure adequate vertical clearance, all top and leveling nuts shall be tightened against the base plate with a minimum torque of 200 lb.-ft. Stainless steel mesh shall then be placed around the perimeter of the base plate. Secure to base plate with stainless steel banding.

* If M270 Gr. 50W (M222) steel is proposed, chemistry for plate to be used shall first be approved by the Engineer as suitable for galvanizing and welding.

GENERAL NOTES

DESIGN: AASHTO Standard Specifications for Structural Supports for Highway Signs, Luminaires and Traffic Signals. ("AASHTO Specifications")

CONSTRUCTION: Current (at time of letting) Illinois Department of Transportation Standard Specifications for Road and Bridge Construction, Supplemental Specifications and Special Provisions. ("Standard Specifications")

LOADING: 90 M.P.H. WIND VELOCITY

WALKWAY LOADING: Dead load plus 500 lbs. concentrated live load.

DESIGN STRESSES:
Field Units
f'_c = 3,500 p.s.i.
fy = 60,000 p.s.i. (reinforcement)

WELDING: All welds to be continuous unless otherwise shown. All welding to be done in accordance with current AWS D1.1 and D1.2 Structural Welding Codes (Steel and Aluminum) and the Standard Specificiations.

MATERIALS: Aluminum Alloys as shown throughout plans. All Structural Steel Pipe shall be ASTM A53 Grade B or A500 Grade B or C. If A500 pipe is substituted for A53, then the outside diameter shall be as detailed and wall thickness greater than or equal to A53.
All Structural Steel Plates and Shapes shall conform to AASHTO M270 Gr. 36, Gr. 50 or Gr. 50W*. Stainless steel for shims, sleeves and handhole covers shall be ASTM A240, Type 302 or 304, or another alloy suitable for exterior exposure and acceptable to the Engineer.
The steel pipe and stiffening ribs at the base plate for the column shall have a minimum longitudinal Charpy V-Notch (CVN) energy of 15 lb.-ft. at 40° F. (Zone 2) before galvanizing.

FASTENERS FOR ALUMINUM TRUSSES: All bolts noted as "high strength" must satisfy the requirements of AASHTO M164 (ASTM A325), or approved alternate, and must have matching lock nuts. Threaded studs for splices (if Members interfere) must satisfy the requirements of ASTM A449, ASTM A193, Grade B7, or approved alternate, and must have matching lock nuts. Bolts and lock nuts not required to be high strength must satisfy the requirements of ASTM A307. All bolts and lock nuts must be hot dip galvanized per AASHTO M232. The lock nuts must have nylon or steel inserts. A stainless steel flat washer conforming to ASTM A240 Type 302 or 304, is required under both head and nut or under both nuts where threaded studs are used. High strength bolt installation shall conform to Article 505.04 (f) (2)d of the IDOT Standard Specifications for Road and Bridge Construction. Rotational capacity ("ROCAP") testing of bolts will not be required.

U-BOLTS AND EYEBOLTS: U-Bolts and Eyebolts must be produced from ASTM A276 Type 304, 304L, 316 or 316L, Condition A, cold finished stainless steel, or an equivalent material acceptable to the Engineer. All nuts for U-Bolts and Eyebolts must be lock nuts equivalent to ASTM A307 with nylon or steel inserts and hot dip galvanized per AASHTO M232. A stainless steel flat washer conforming to ASTM A240, Type 302 or 304, is required under each U-Bolt and Eyebolt lock nut.

GALVANIZING: All Steel Grating, Plates, Shapes and Pipe shall be Hot Dip Galvanized after fabrication in accordance with AASHTO M111. Painting is not permitted.

ANCHOR RODS: Shall conform to AASHTO M314 Gr. 105 with a minimum Charpy V-Notch (CVN) energy of 15 lb.-ft. at 10° F.

CONCRETE SURFACES: All concrete surfaces above an elevation 6" below the lowest final ground line at each foundation shall be cleaned and coated with Bridge Seat Sealer in accordance with the Standard Specifications.

REINFORCEMENT BARS: Reinforcement Bars designated (E) shall be epoxy coated in accordance with the Standard Specifications.

FOUNDATIONS: The contract unit price for Drilled Shaft Concrete Foundations shall include reinforcement bars complete in place.

TOTAL BILL OF MATERIAL

ITEM	UNIT	TOTAL
RELOCATE OVERHEAD SIGN STRUCTURE - CANTILEVER	Each	1
DRILLED SHAFT CONCRETE FOUNDATIONS	Cu. Yds.	9.9

Ciorba Group, Inc.
CONSULTING ENGINEERS
5007 North Cumberland Avenue
Suite 200 Chicago, Illinois 60656
Tel. 773.775.4200
Fax 773.775.4014
Email: ch.cgi@ciorba.com

FILE NAME =	USER NAME = mthomas	DESIGNED - SAT	REVISED -
		CHECKED - AMK	REVISED -
	PLOT SCALE =	DRAWN - SAT	REVISED -
	PLOT DATE = 10/27/2010	CHECKED - AMK	REVISED -

STATE OF ILLINOIS
DEPARTMENT OF TRANSPORTATION

CANTILEVER SIGN STRUCTURES – GENERAL PLAN & ELEVATION
ALUMINUM TRUSS & STEEL POST

SHEET NO. 1 OF 3 SHEETS

F.A.I. RTE.	SECTION	COUNTY	TOTAL SHEETS	SHEET NO.
80	99-5-Y	WILL	276	124

CONTRACT NO. 60147

ILLINOIS FED. AID PROJECT

n:\proj\33841\2_west\design\structure\overhead sign structure - cantilever\3384 I-80W 01 OSC-A-1.dgn

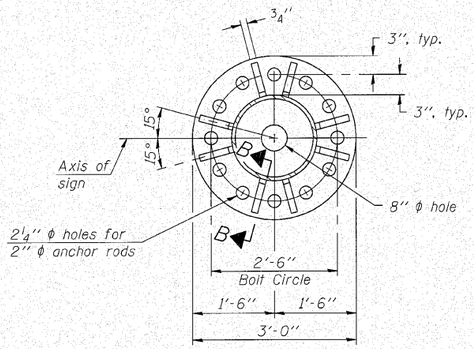

SECTION A-A
Existing

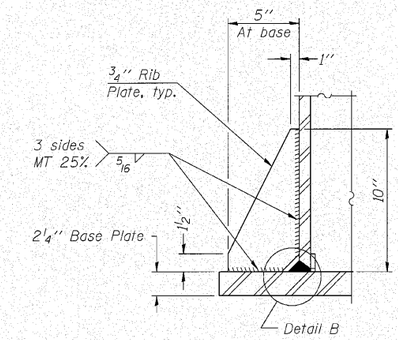

SECTION B-B
Existing

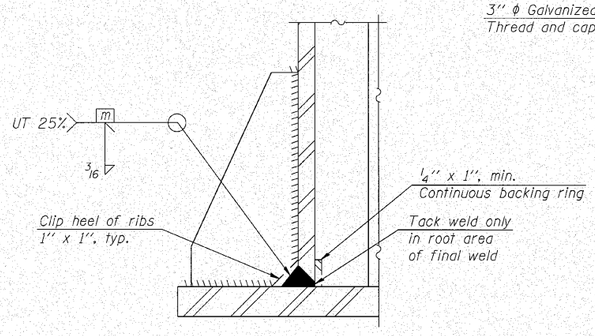

DETAIL B
(Typical rib)
Existing

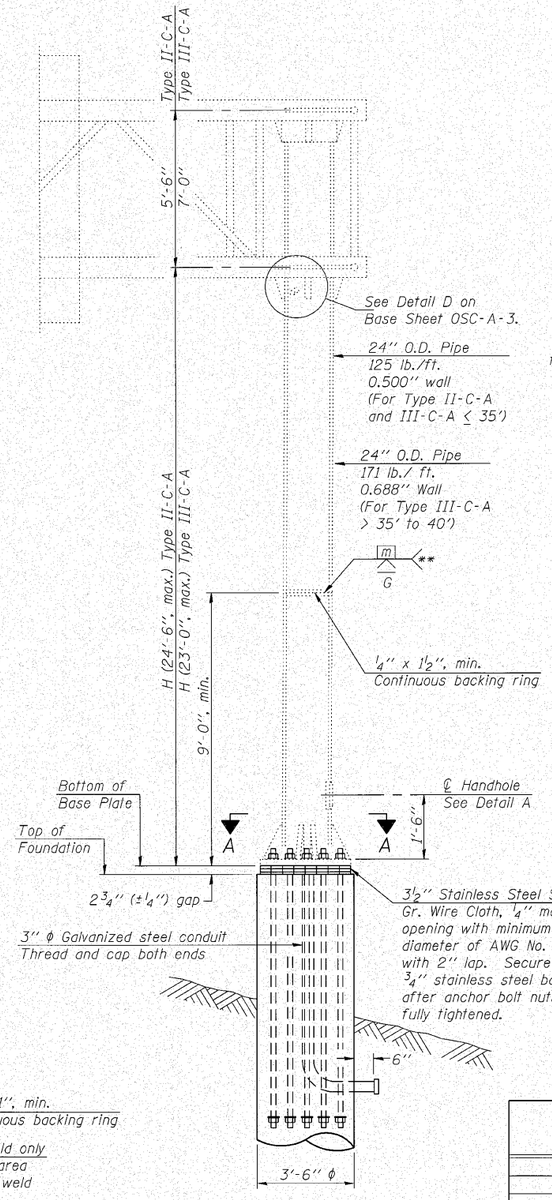

FRONT ELEVATION
For Foundation Details see Base Sheet OSC-A-9.

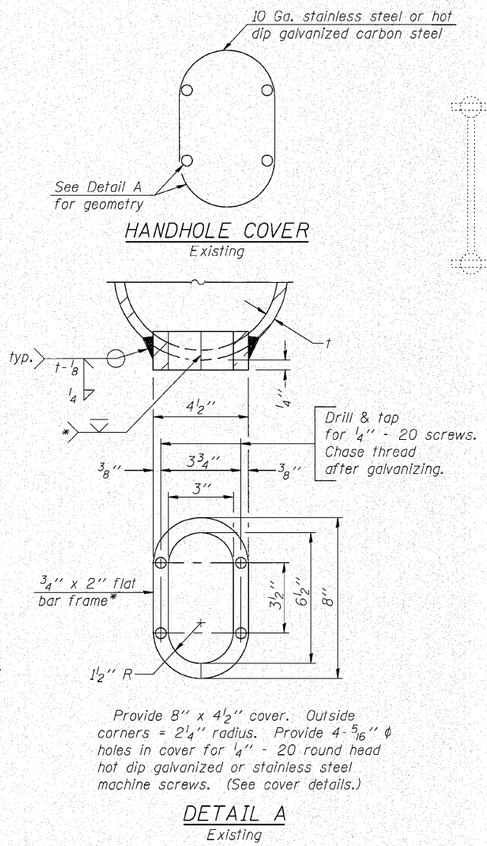

Provide 8'' x 4 1/2'' cover. Outside corners = 2 1/4'' radius. Provide 4-5/16'' ϕ holes in cover for 1/4'' - 20 round head hot dip galvanized or stainless steel machine screws. (See cover details.)

HANDHOLE COVER
Existing

DETAIL A
Existing

* Bent bars may be butt welded top and bottom or bottom only. In lieu of fabricated handhole frame as shown, may cut from 2'' plate (rolling direction vertical). All cut faces to be ground to ANSI Roughness of 500 μin or less.

** Butt welded joint in post is only allowed for post heights (H) over 20 ft. in length. If used, weld procedure must be preapproved by Engineer and joint shall receive 100% RT or UT (tension criteria) at Contractor's expense.

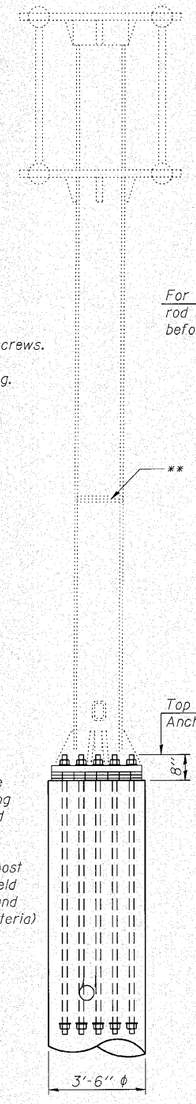

SIDE ELEVATION

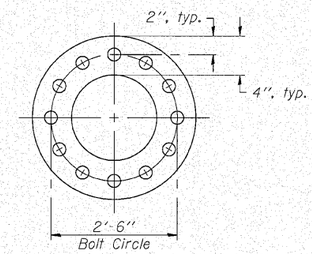

SUGGESTED POSITIONING PLATE

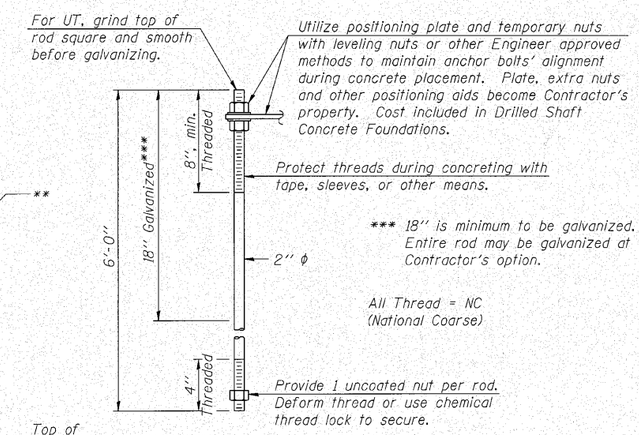

*** 18'' is minimum to be galvanized. Entire rod may be galvanized at Contractor's option.

All Thread = NC (National Coarse)

ANCHOR ROD DETAIL

Anchor rods shall conform to AASHTO M314 Grade 105 and meet Charpy V-Notch (CVN) energy of 15 lb.-ft. at 10° F. before galvanizing. Galvanize the upper 18'' (minimum***) and associated M291, Grade A, C or DH heavy hex nuts and hardened washers per AASHTO M232. No welding shall be permitted on rods. Provide an unfinished nut at bottom, a hexagon locknut and washer above base plate and a leveling nut and washer below base plate. Nuts shall each be tightened with 200 lb.-ft. minimum torque against base plate. Before or after threading, but before galvanizing, each anchor rod shall be ultrasonically tested (UT) by a Level II or III inspector, qualified in accord with ANSI guidelines, using a straight beam, 1/2'' ϕ 3.5 mhz. transducer, to insure no rejectable flaws exist in the upper 18'' (tension criteria). Cost of testing included in Drilled Shaft Concrete Foundations.

Structure Number	Station	H

Note: "H" based on 15'-0'' or actual sign height, whichever is greater.

* Grind anchor rod to bright finish at ground clamp location before installing clamp.

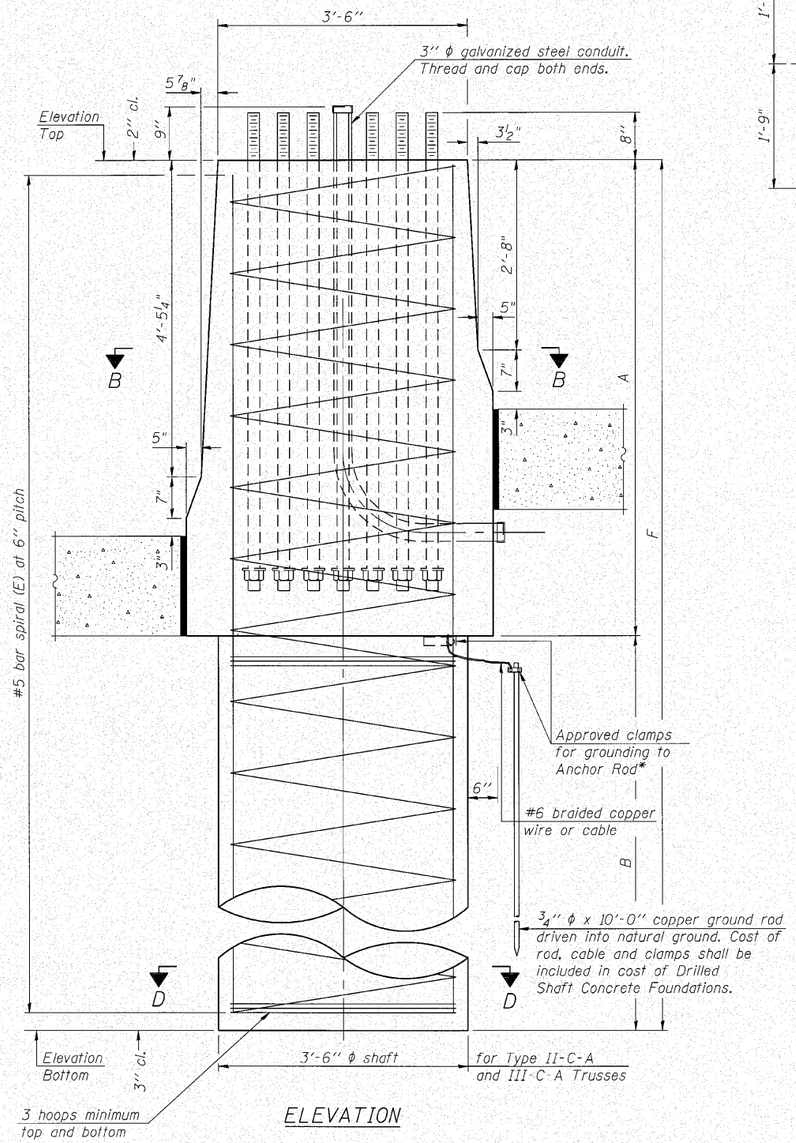

ELEVATION

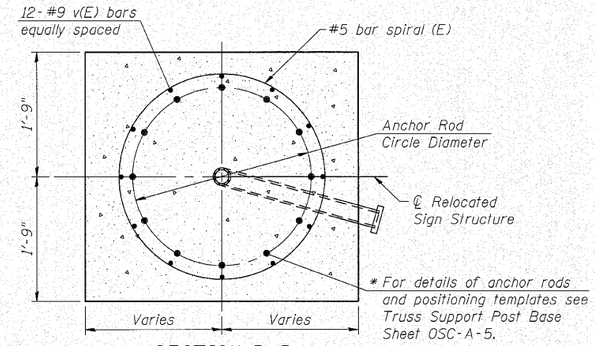

SECTION B-B

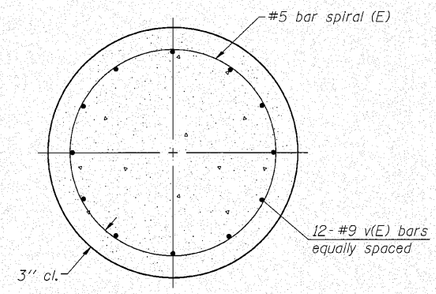

SECTION D-D

3'-6" ϕ shaft

NOTES:

The foundation dimensions shown in the Foundation Design Table are based on the presence of mostly cohesive soils with an average Unconfined Compressive Strength (Qu) of at least 1.25 tsf, which must be determined by previous soil investigations at the jobsite. When other conditions are indicated, the boring data will be included in the plans and the foundation dimensions shown in the Foundation Data Table will be the result of site specific designs.

If the conditions encountered are different than those indicated, the Contractor shall notify the Engineer to determine if the foundation dimensions need to be modified. If dimensions "B" or "F" are revised by more than 12" by the Contractor, "as-built" plans shall be prepared and submitted to the District Bureau of Operations for future reference.

No sonotubes or decomposable forms shall be used below the lower conduit entrance. Permanent metal forms or other shielding may not be left in place below that elevation without the Engineer's written permission.

Concrete shall be placed monolithically, without construction joints.

Backfill shall be placed per Article 502 of Standard Specification and prior to erection of support column.

A normal surface finish followed by a Bridge Seat Sealer application will be required on concrete surfaces above the lowest elevation 6" below finished ground line. Cost included in "Drilled Shaft Concrete Foundation".

FOUNDATION DESIGN TABLE

Truss Type	Post Base Sheet	Maximum CantileverLength (ft)	Maximum Total Sign Area (sq ft)	Shaft Diameter (in)	"B" Depth (ft)	Anchor Rods		Anchor Rod Circle Diameter (in)
						No.	Diameter (in)	
I-C-A	OSC-A-4	25	170	3.0	16.0	8	2	22
II-C-A	OSC-A-5	30	170	3.5	17.0	12	2	30
II-C-A	OSC-A-5	30	340	3.5	21.5	12	2	30
III-C-A	OSC-A-5	35	170	3.5	19.0	12	2	30
III-C-A	OSC-A-5	35	250	3.5	22.5	12	2	30
III-C-A	OSC-A-5	35	400	3.5	26.5	12	2	30
III-C-A	OSC-A-5	40	400	3.5	32.0	12	2	30

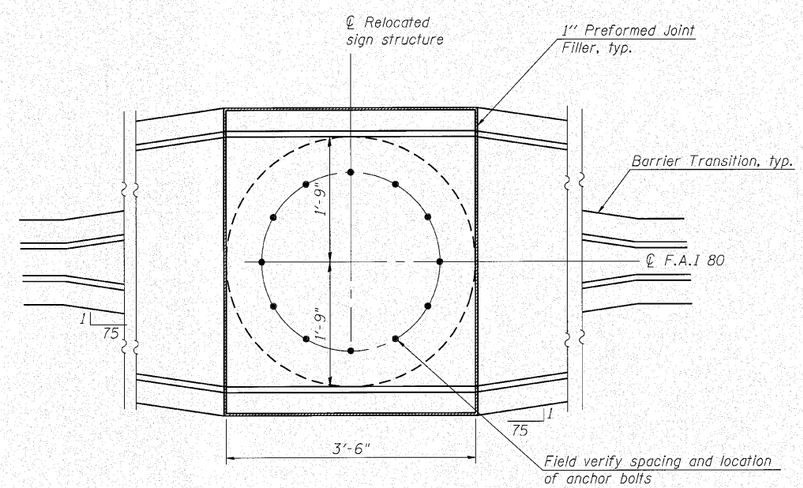

PLAN

FOUNDATION DATA TABLE

Structure Number	Station	Truss Type	Shaft Diameter	Elevation Top	Elevation Bottom	Qu	A	B	F	Class DS Concrete Cubic Yards
IC0991080L138.4	737+50	II-C-A	3'-6"	653.01	629.34		6'-8"	17'-0"	23'-8"	9.9

Ciorba Group, Inc.
CONSULTING ENGINEERS
2507 North Cumberland Avenue
Chicago, Illinois 60666
Tel. 773.774.0000
Fax 773.775.6014
Email chicago@ciorba.com

FILE NAME =	USER NAME = mthomas	DESIGNED - SAT	REVISED -
		CHECKED - AMK	REVISED -
	PLOT SCALE =	DRAWN - SAT	REVISED -
	PLOT DATE = 10/27/2010	CHECKED - AMK	REVISED -

STATE OF ILLINOIS
DEPARTMENT OF TRANSPORTATION

CANTILEVER SIGN STRUCTURES – DRILLED SHAFT
ALUMINUM TRUSS & STEEL POST

SHEET NO. 3 OF 3 SHEETS

F.A.I. RTE.	SECTION	COUNTY	TOTAL SHEETS	SHEET NO.
80	99-5-Y	WILL	276	126
		CONTRACT NO. 60147		
		ILLINOIS FED. AID PROJECT		

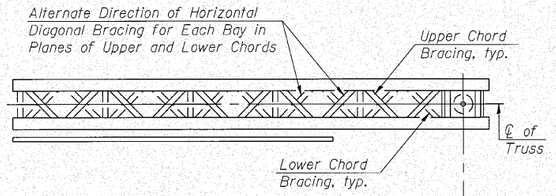

TYPICAL PLAN

(Walkway not shown)

Structure Number	Station	Design Truss Type	Cantilever Length (L)	Elev. A	Dim. D	D_s	Total Sign Area
1C099I080L139.2	778+15	II-C-A	27'-9"	678.0	2'-1¼"	10'-6"	174 Sq. Ft.

Truss Type	Maximum Sign Area	Maximum Length
I-C-A	170 Sq. Ft.	25 Ft.
II-C-A	340 Sq. Ft.	30 Ft.
III-C-A	400 Sq. Ft.	40 Ft.

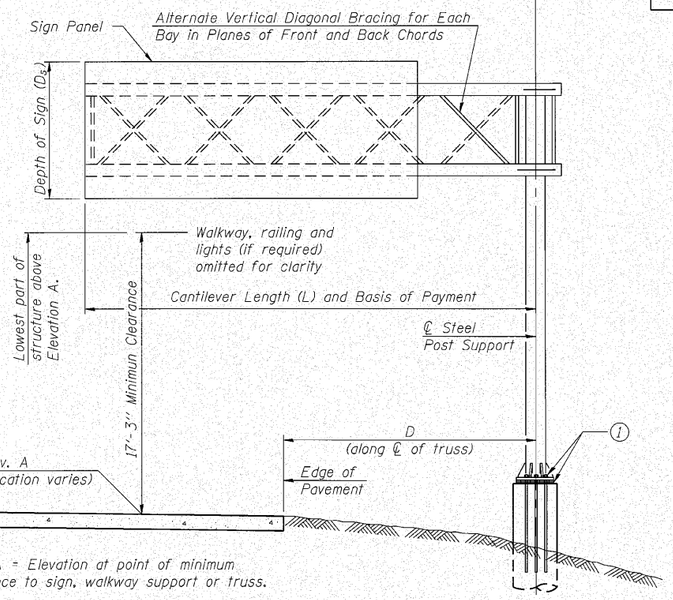

Elev. A = Elevation at point of minimum clearance to sign, walkway support or truss.

TYPICAL ELEVATION

Looking in Direction of Traffic

Sign support structures may be subject to damaging vibrations and oscillations when sign panels are not in place during erection or maintenance of the structure. To avoid these vibrations and oscillations, consideration should be given to attaching temporary blank sign panels to the structure.

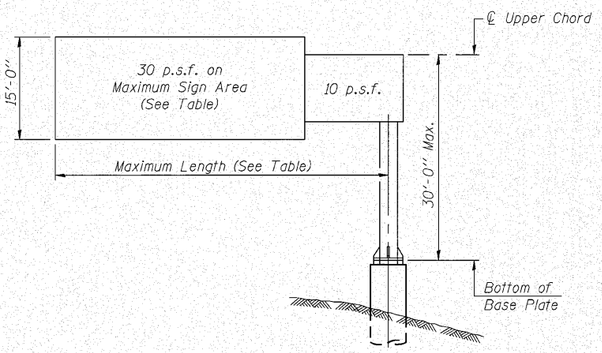

DESIGN WIND LOADING DIAGRAM

Parameters shown are basis for I.D.O.T. Standards Installations not within dimensional limits shown require special analysis for all components.

Note:
Trusses shall be shipped individually with adequate provision to prevent detrimental motion during transport. This may require ropes between horizontals and diagonals or energy dissipating (elastic) ties to the vehicle. The contractor is responsible for maintaining the configuration and protection of the trusses.

(1) After adjustments to level truss and insure adequate vertical clearance, all top and leveling nuts shall be tightened against the base plate with a minimum torque of 200 lb.-ft. Stainless steel mesh shall then be placed around the perimeter of the base plate. Secure to base plate with stainless steel banding.

* If M270 Gr. 50W (M222) steel is proposed, chemistry for plate to be used shall first be approved by the Engineer as suitable for galvanizing and welding.

GENERAL NOTES

DESIGN: AASHTO Standard Specifications for Structural Supports for Highway Signs, Luminaires and Traffic Signals. ("AASHTO Specifications")

CONSTRUCTION: Current (at time of letting) Illinois Department of Transportation Standard Specifications for Road and Bridge Construction, Supplemental Specifications and Special Provisions. ("Standard Specifications")

LOADING: 90 M.P.H. WIND VELOCITY

WALKWAY LOADING: Dead load plus 500 lbs. concentrated live load.

DESIGN STRESSES:
Field Units
f'_c = 3,500 p.s.i.
fy = 60,000 p.s.i. (reinforcement)

WELDING: All welds to be continuous unless otherwise shown. All welding to be done in accordance with current AWS D1.1 and D1.2 Structural Welding Codes (Steel and Aluminum) and the Standard Specificiations.

MATERIALS: Aluminum Alloys as shown throughout plans. All Structural Steel Pipe shall be ASTM A53 Grade B or A500 Grade B or C. If A500 pipe is substituted for A53, then the outside diameter shall be as detailed and wall thickness greater than or equal to A53.
All Structural Steel Plates and Shapes shall conform to AASHTO M270 Gr. 36, Gr. 50 or Gr. 50W*. Stainless steel for shims, sleeves and handhole covers shall be ASTM A240, Type 302 or 304, or another alloy suitable for exterior exposure and acceptable to the Engineer.
The steel pipe and stiffening ribs at the base plate for the column shall have a minimum longitudinal Charpy V-Notch (CVN) energy of 15 lb.-ft. at 40° F. (Zone 2) before galvanizing.

FASTENERS FOR ALUMINUM TRUSSES: All bolts noted as "high strength" must satisfy the requirements of AASHTO M164 (ASTM A325), or approved alternate, and must have matching lock nuts. Threaded studs for splices (if Members interfere) must satisfy the requirements of ASTM A449, ASTM A193, Grade B7, or approved alternate, and must have matching lock nuts. Bolts and lock nuts not required to be high strength must satisfy the requirements of ASTM A307. All bolts and lock nuts must be hot dip galvanized per AASHTO M232. The lock nuts must have nylon or steel inserts. A stainless steel flat washer conforming to ASTM A240 Type 302 or 304, is required under both head and nut or under both nuts where threaded studs are used. High strength bolt installation shall conform to Article 505.04 (f) (2)d of the IDOT Standard Specifications for Road and Bridge Construction. Rotational capacity ("ROCAP") testing of bolts will not be required.

U-BOLTS AND EYEBOLTS: U-Bolts and Eyebolts must be produced from ASTM A276 Type 304, 304L, 316 or 316L, Condition A, cold finished stainless steel, or an equivalent material acceptable to the Engineer. All nuts for U-Bolts and Eyebolts must be lock nuts equivalent to ASTM A307 with nylon or steel inserts and hot dip galvanized per AASHTO M232. A stainless steel flat washer conforming to ASTM A240, Type 302 or 304, is required under each U-Bolt and Eyebolt lock nut.

GALVANIZING: All Steel Grating, Plates, Shapes and Pipe shall be Hot Dip Galvanized after fabrication in accordance with AASHTO M111. Painting is not permitted.

ANCHOR RODS: Shall conform to AASHTO M314 Gr. 105 with a minimum Charpy V-Notch (CVN) energy of 15 lb.-ft. at 10° F.

CONCRETE SURFACES: All concrete surfaces above an elevation 6" below the lowest final ground line at each foundation shall be cleaned and coated with Bridge Seat Sealer in accordance with the Standard Specifications.

REINFORCEMENT BARS: Reinforcement Bars designated (E) shall be epoxy coated in accordance with the Standard Specifications.

FOUNDATIONS: The contract unit price for Drilled Shaft Concrete Foundations shall include reinforcement bars complete in place.

TOTAL BILL OF MATERIAL

ITEM	UNIT	TOTAL
OVERHEAD SIGN STRUCTURE CANTILEVER TYPE II-C-A	Foot	27.75
OVERHEAD SIGN STRUCTURE WALKWAY	Foot	18.25
DRILLED SHAFT CONCRETE FOUNDATIONS	Cu. Yds.	11.4

OSC-A-1 7-1-10

LIN ENGINEERING, LTD. Consulting Engineers Chatham, Illinois

USER NAME =	DESIGNED - ADB	REVISED -
	CHECKED - MTH	REVISED -
PLOT SCALE =	DRAWN - ADB	REVISED -
PLOT DATE =	CHECKED - MTH	REVISED -

STATE OF ILLINOIS
DEPARTMENT OF TRANSPORTATION

CANTILEVER SIGN STRUCTURES – GENERAL PLAN & ELEVATION
ALUMINUM TRUSS & STEEL POST

SHEET NO. 1 OF 9 SHEETS

F.A.I. RTE.	SECTION	COUNTY	TOTAL SHEETS	SHEET NO.
80	99 (5&5-1) Y	WILL	276	127
		CONTRACT NO. 60147		
		ILLINOIS FED. AID PROJECT		

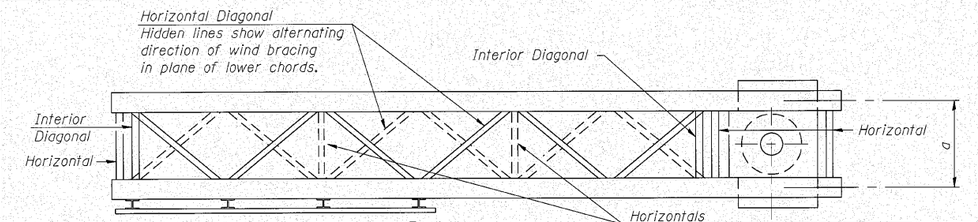

PLAN
(Walkway not shown)

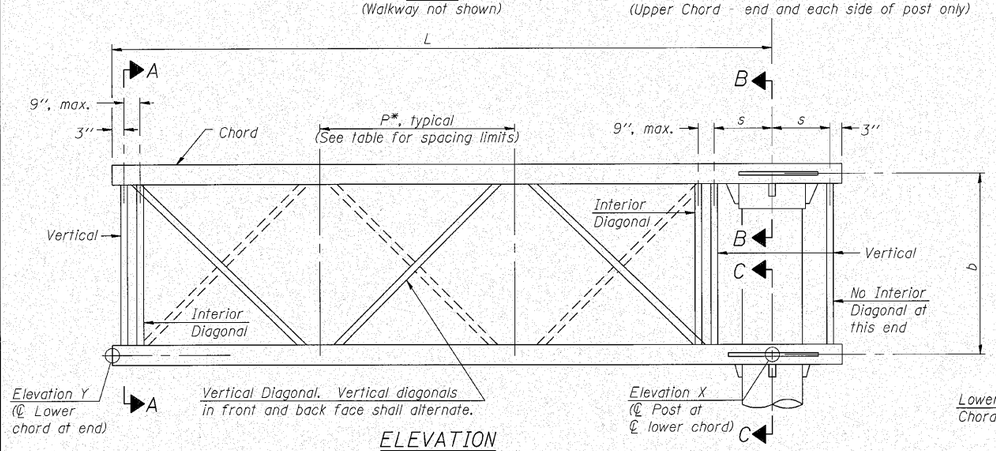

ELEVATION
(Sign and walkway omitted for clarity)

TYPICAL TRUSS UNIT

For Section B-B and Section C-C, see Base Sheet OSC-A-3.

Note:
There are twice as many horizontal diagonals as there are vertical diagonals.

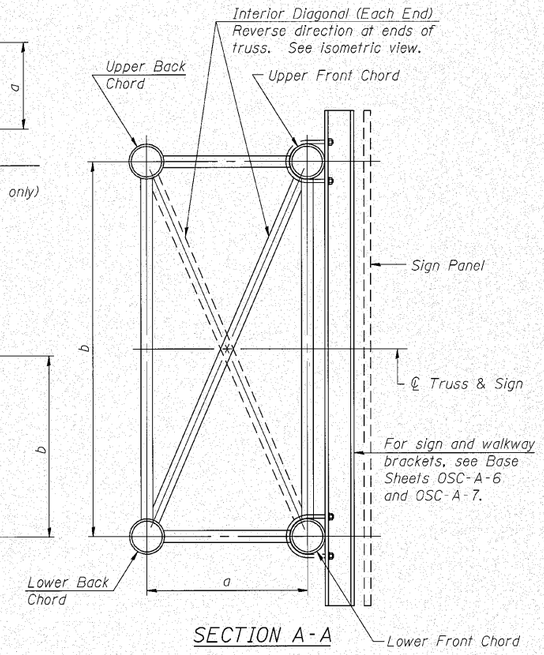

SECTION A-A

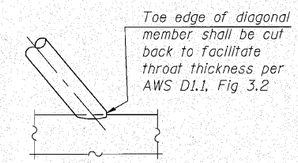

DETAIL A

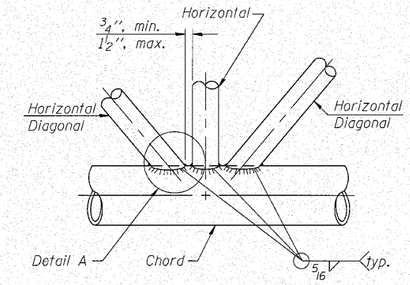

TRUSS INTERIOR JOINT DETAIL

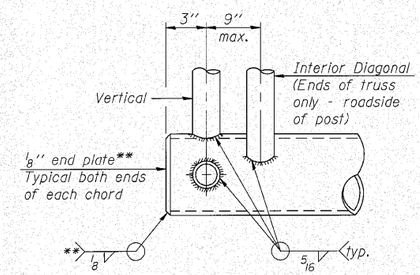

CANTILEVER END JOINT DETAIL
** Contractor may alternatively use standard aluminum drive-fit cap to close ends.

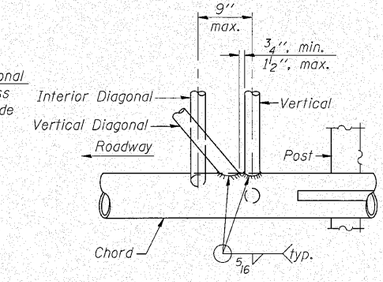

POST END JOINT DETAIL

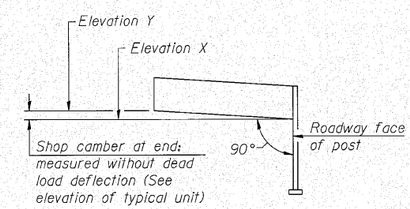

CAMBER DIAGRAM
(For Fabrication Only)

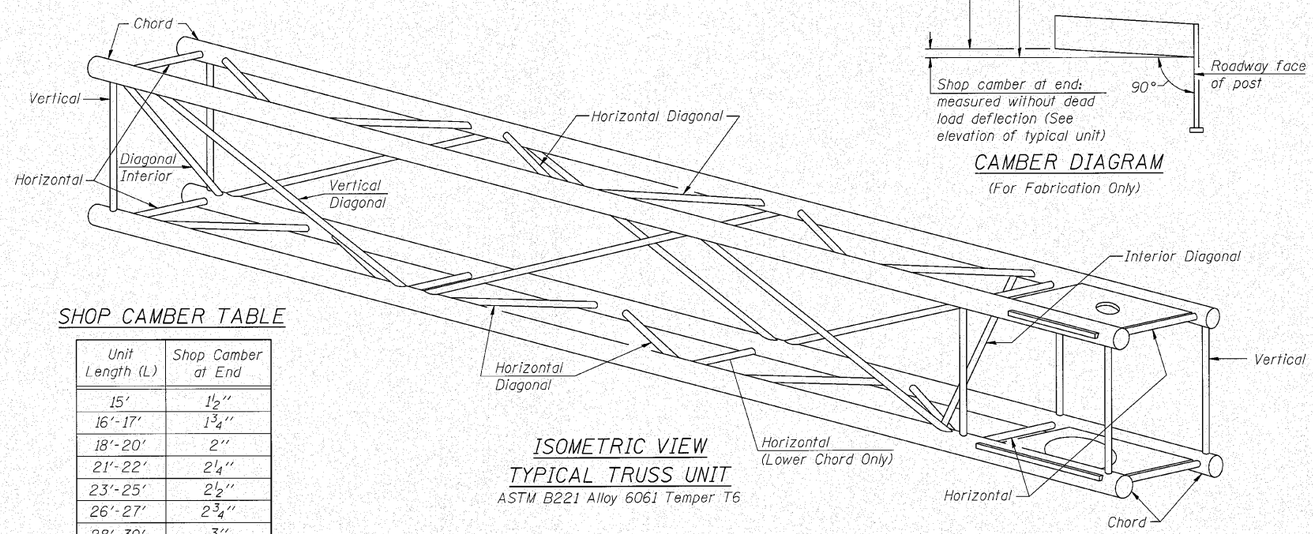

ISOMETRIC VIEW
TYPICAL TRUSS UNIT
ASTM B221 Alloy 6061 Temper T6

TRUSS UNIT TABLE

Truss Type	Dimension "a"	Dimension "b"	Dimension "s"	Limits for Panel Spacing (P)*	Up. & Low. Chord O.D.	Up. & Low. Chord Wall	Verticals; Horizontals; Vertical, Horizontal, and Interior Diagonals O.D.	Verticals; Horizontals; Vertical, Horizontal, and Interior Diagonals Wall
I-C-A	24"	54"	16"	36" min. to 48" max.	5"	5/16"	2 1/2"	5/16"
II-C-A	36"	66"	21"	42" min. to 54" max.	6 1/2"	5/16"	3 1/4"	5/16"
III-C-A (35' Max.)	36"	84"	21"	48" min. to 66" max.	7"	3/8"	3 1/2"	3/8"
III-C-A (>35' to 40')	36"	84"	21"	48" min. to 66" max.	8"	3/8"	3 1/2"	3/8"

$$*P = \frac{L - s - 3''}{\#\ Panels}$$

Structure Number	Station	Truss Type	Design Length (L)	Number of Panels Per Unit	Panel Length (P)*
1C099I080L139.2	778+15	II-C-A	27'-9"	6	4'-3 1/2"

SHOP CAMBER TABLE

Unit Length (L)	Shop Camber at End
15'	1 1/2"
16'-17'	1 3/4"
18'-20'	2"
21'-22'	2 1/4"
23'-25'	2 1/2"
26'-27'	2 3/4"
28'-30'	3"
31'-32'	3 1/4"
33'-35'	3 1/2"
36'-37'	4"
38'-40'	4 1/2"

OSC-A-2 7-1-10

LIN ENGINEERING, LTD.
Consulting Engineers
Chatham, Illinois

USER NAME =	DESIGNED - ADB	REVISED -	
	CHECKED - MTH	REVISED -	
PLOT SCALE =	DRAWN - ADB	REVISED -	
PLOT DATE =	CHECKED - MTH	REVISED -	

STATE OF ILLINOIS
DEPARTMENT OF TRANSPORTATION

CANTILEVER SIGN STRUCTURES – TRUSS DETAILS
ALUMINUM TRUSS & STEEL POST
SHEET NO. 2 OF 9 SHEETS

F.A.I. RTE.	SECTION	COUNTY	TOTAL SHEETS	SHEET NO.
80	99 (5&5-1) Y	WILL	276	128
		CONTRACT NO. 60I47		
		ILLINOIS FED. AID PROJECT		

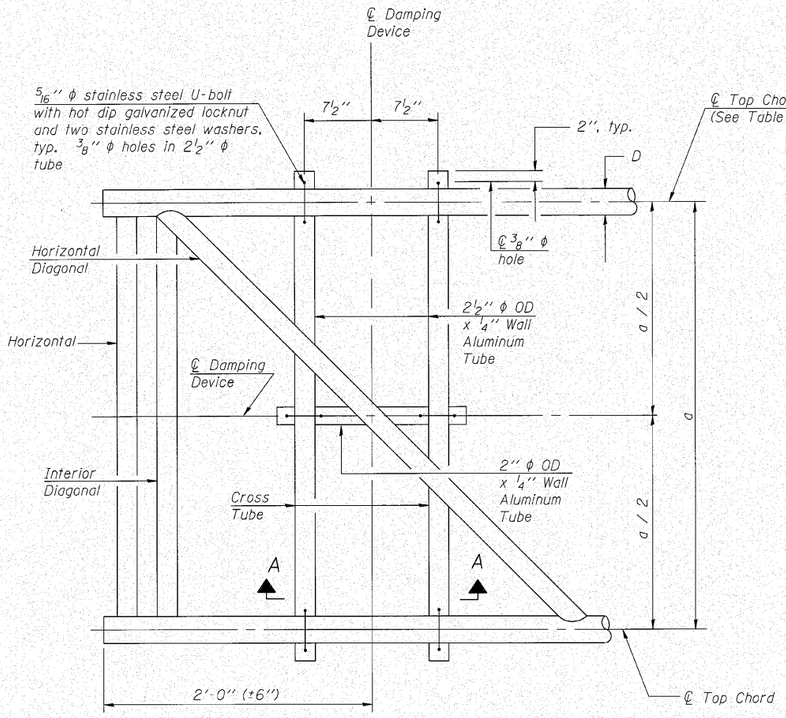

PLAN DETAIL

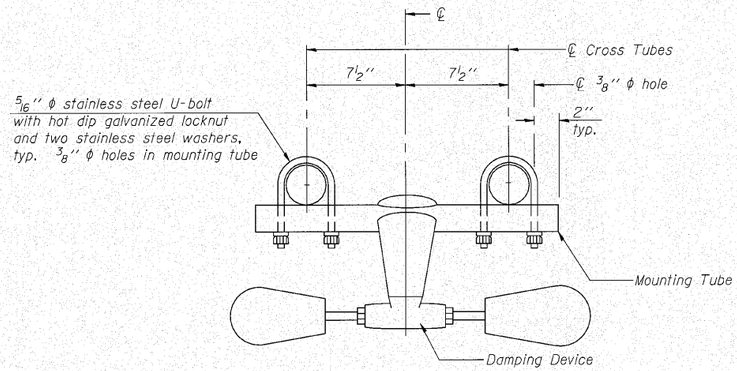

TRUSS DAMPING DEVICE CONNECTION DETAIL

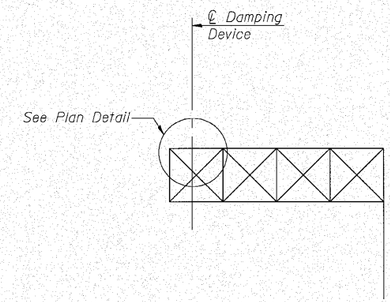

ELEVATION

Aluminum Cantilever Sign Structure

GENERAL NOTES

Damper: One damper per truss. (31 lbs. Stockbridge-Type Aluminum-29'' minimum between ends of weights)

Materials: Aluminum tubes shall be ASTM B221 alloy 6061 temper T6

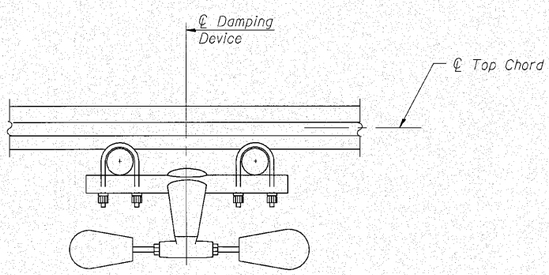

SECTION A-A

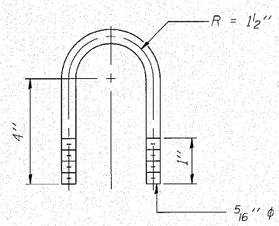

DAMPING DEVICE MOUNTING TUBE U-BOLT DETAIL

(Typical)

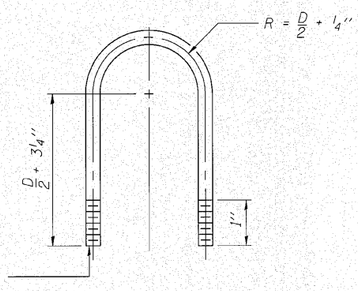

TOP CHORD TO CROSS TUBE U-BOLT DETAIL

(Typical)

OSC-A-D 7-1-10

LIN ENGINEERING, LTD. Consulting Engineers Chatham, Illinois	USER NAME =	DESIGNED - ADB	REVISED -
		CHECKED - MTH	REVISED -
	PLOT SCALE =	DRAWN - ADB	REVISED -
	PLOT DATE =	CHECKED - MTH	REVISED -

STATE OF ILLINOIS
DEPARTMENT OF TRANSPORTATION

CANTILEVER SIGN STRUCTURE
DAMPING DEVICE

SHEET NO. 3 OF 9 SHEETS

F.A.I. RTE.	SECTION	COUNTY	TOTAL SHEETS	SHEET NO.
80	99 (5&5-1) Y	WILL	276	129
		CONTRACT NO. 60I47		
		ILLINOIS FED. AID PROJECT		

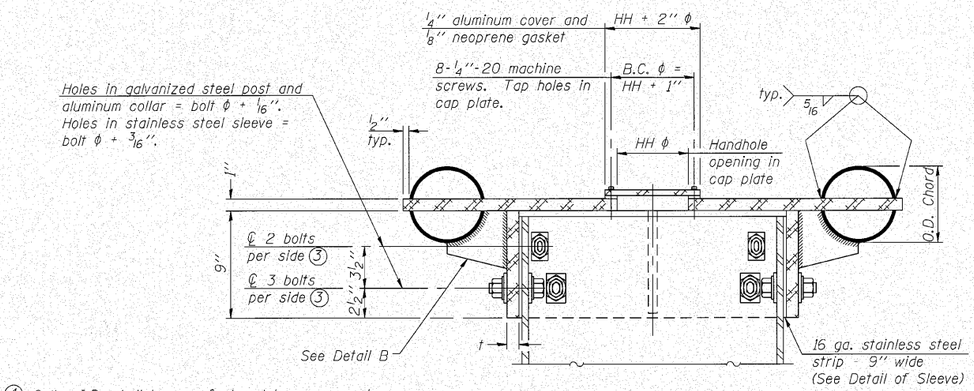

SECTION B-B

Bolts, washers (including contoured washers), and locknuts shall be stainless steel.

(4) Collar I.D. shall be manufactured to correspond to O.D. of actual galvanized post and stainless steel sleeve plus 1/8" (±1/16"). Maximum gap between post and collar at any location equals 1/8" before tightening bolts.

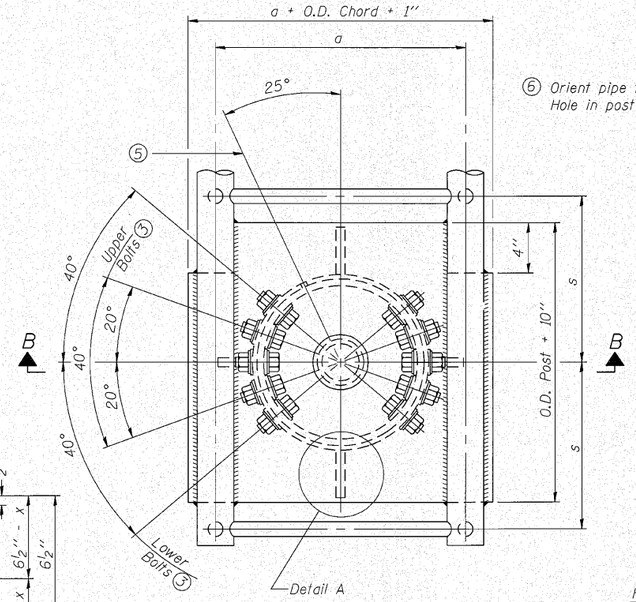

(6) Orient pipe toward walkway side. Hole in post = O.D. pipe + 1/8".

PLAN VIEW - TOP OF COLUMN

(5) Optional full penetration weld in collar. (Two locations maximum....(180° apart)....X-ray or UT 100%)

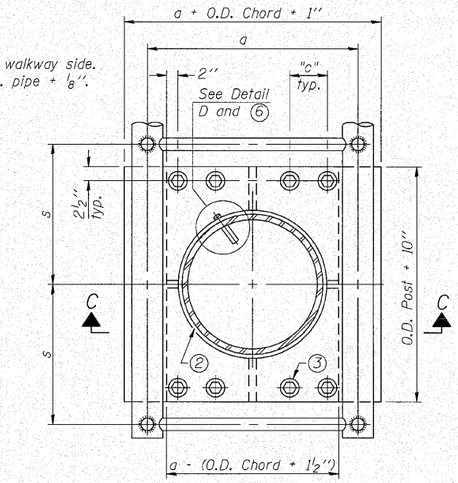

SECTION THRU POST ABOVE LOWER CHORDS

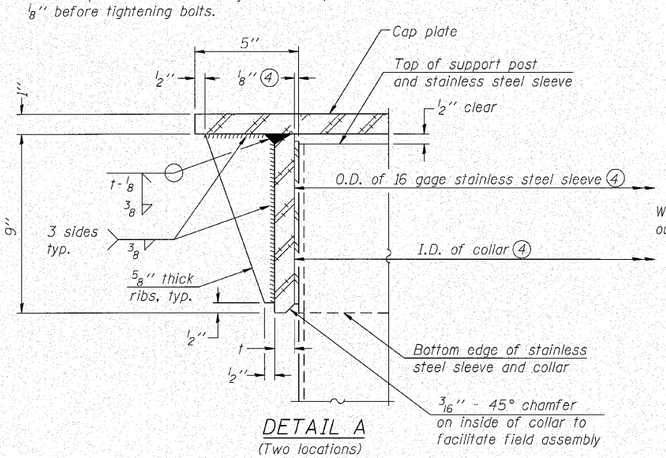

DETAIL A

(Two locations)

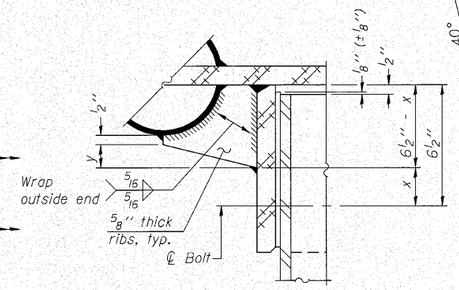

DETAIL B

Two locations
(For details not shown, see Detail C)

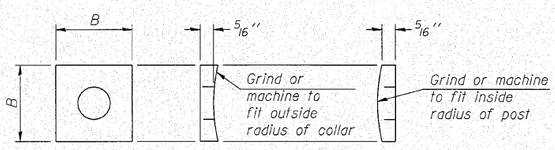

CONTOURED WASHERS

Bolt Size	Contoured Washers	
	Hole Dia.	B
7/8"	1"	2 1/2"
1"	1 1/8"	3"
1 1/4"	1 3/8"	3 1/4"

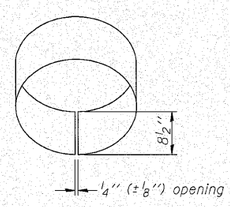

DETAIL OF STAINLESS STEEL SLEEVE

Weld to post after galvanizing. (Prepare post surface to insure tight, uniform fit and allow welding.) Welds to be 1 1/2" long at 6" cts. along top edge and at 1/4" opening.

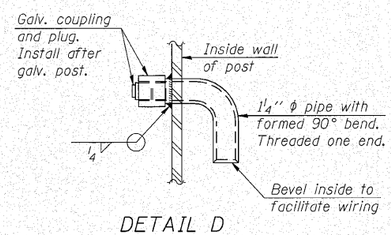

DETAIL D

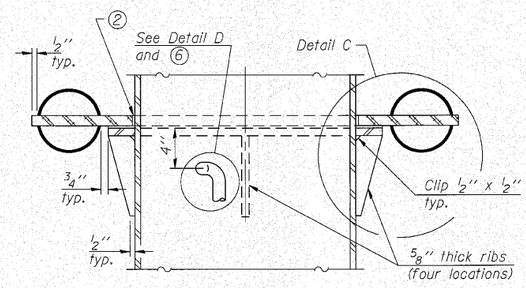

SECTION C-C

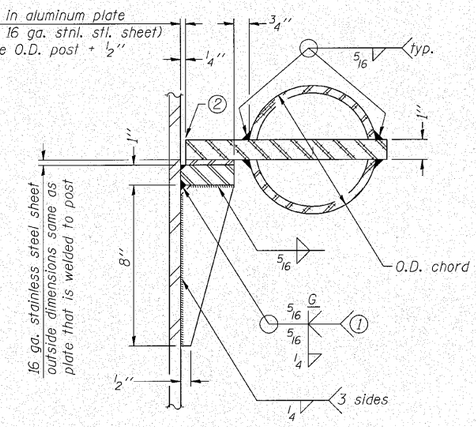

DETAIL C

Truss Type	Post Size	Upper & Lower Connection Bolt Diameter (3)	Lower Juncture Bolt Spacing Dimension "c" (3)	Opening in Cap Plate "HH"	Collar Thickness (t)	Side Ribs	
						x	y
I-C-A	16" ϕ (83#/')	7/8"	3 1/4"	8"	5/8"	1 3/4"	2 1/4"
II-C-A	24" ϕ (125#/')	1"	3 1/2"	12"	7/8"	2"	1 1/4"
III-C-A (35' max.)	24" ϕ (125#/')	1 1/4"	3 1/2"	12"	7/8"	2"	1"
III-C-A (>35' to 40')	24" ϕ (171#/')	1 1/4"	3 1/2"	12"	7/8"	2"	1"

(1) Grind top if required to fully seat aluminum plate and stainless steel sheet.

(2) After tightening lower connection bolts, fill gap with non-hardening, silicone caulk suitable for exterior exposure and acceptable to the Engineer. Cost is included in Overhead Sign Structure Cantilever.

(3) Upper and lower connection bolts in collar and bolts at lower chord connection shall be high strength with matching locknuts. Connection bolts shall have 2 stainless steel flat washers each.

OSC-A-3 7-1-10

LIN ENGINEERING, LTD.
Consulting Engineers
Chatham, Illinois

USER NAME =	DESIGNED - ADB	REVISED -	
	CHECKED - MTH	REVISED -	
PLOT SCALE =	DRAWN - ADB	REVISED -	
PLOT DATE =	CHECKED - MTH	REVISED -	

STATE OF ILLINOIS
DEPARTMENT OF TRANSPORTATION

CANTILEVER SIGN STRUCTURES – JUNCTURE DETAILS
ALUMINUM TRUSS & STEEL POST

SHEET NO. 4 OF 9 SHEETS

F.A.I. RTE.	SECTION	COUNTY	TOTAL SHEETS	SHEET NO.
80	99 (5&5-1) Y	WILL	276	130
		CONTRACT NO. 60147		
		ILLINOIS FED. AID PROJECT		

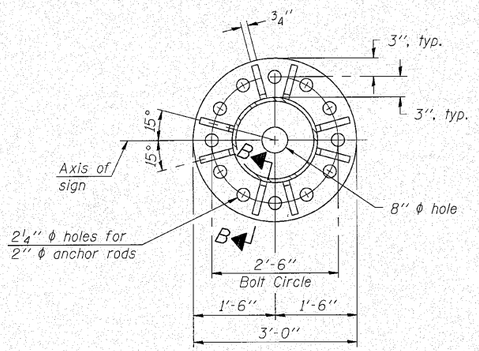

SECTION A-A

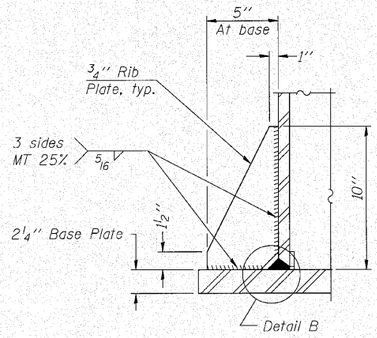

SECTION B-B

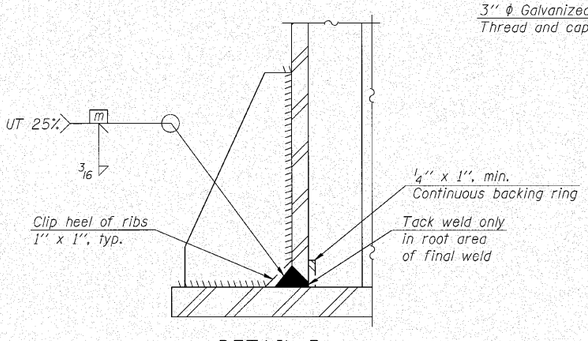

DETAIL B

(Typical rib)

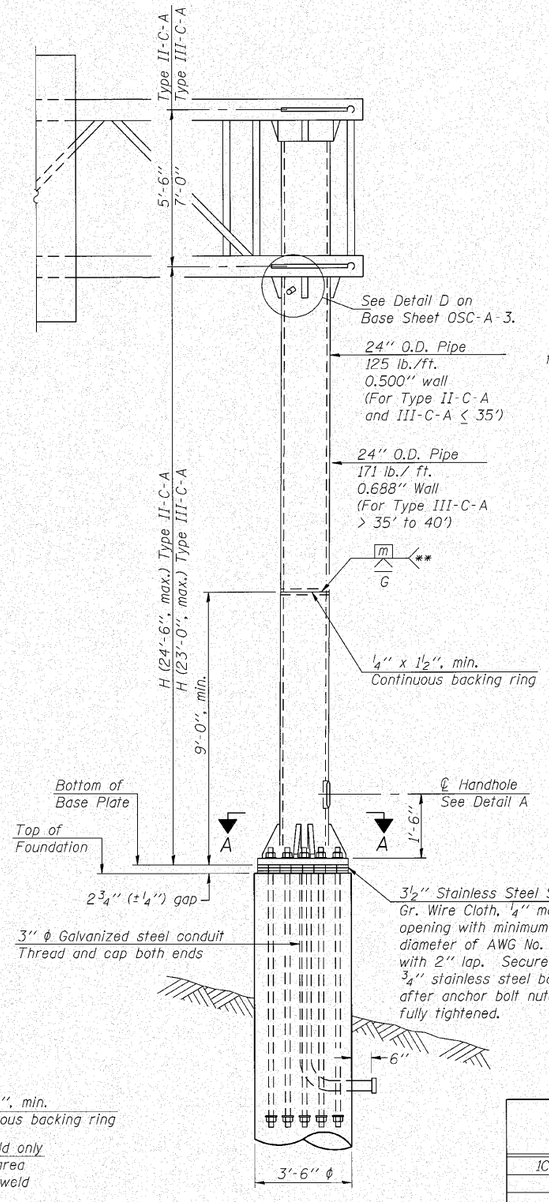

FRONT ELEVATION

For Foundation Details see Base Sheet OSC-A-9.

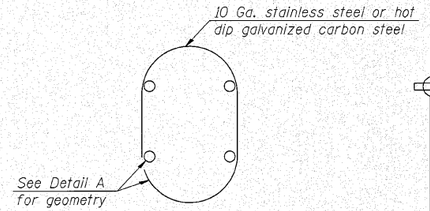

HANDHOLE COVER

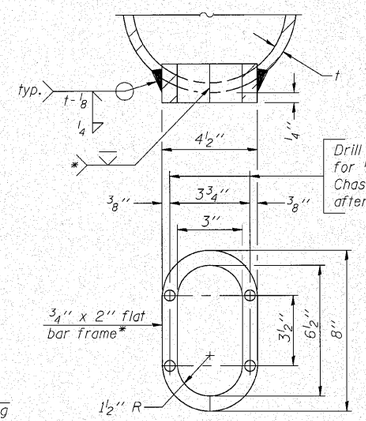

Provide 8" x 4 1/2" cover. Outside corners = 2 1/4" radius. Provide 4-5/16" ϕ holes in cover for 1/4" - 20 round head hot dip galvanized or stainless steel machine screws. (See cover details.)

DETAIL A

* Bent bars may be butt welded top and bottom or bottom only. In lieu of fabricated handhole frame as shown, may cut from 2" plate (rolling direction vertical). All cut faces to be ground to ANSI Roughness of 500 μin or less.

** Butt welded joint in post is only allowed for post heights (H) over 20 ft. in length. If used, weld procedure must be preapproved by Engineer and joint shall receive 100% RT or UT (tension criteria) at Contractor's expense.

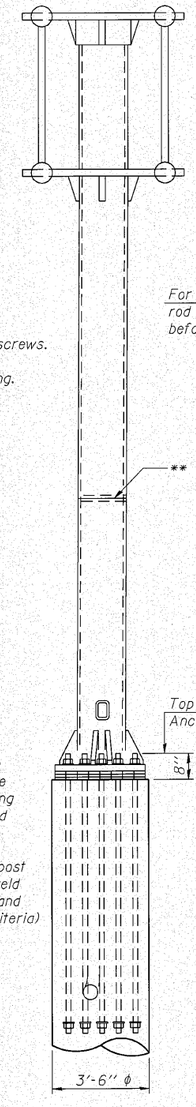

SIDE ELEVATION

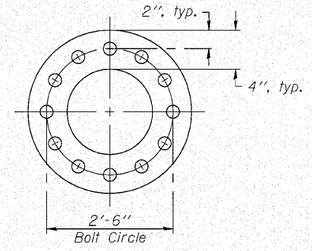

SUGGESTED POSITIONING PLATE

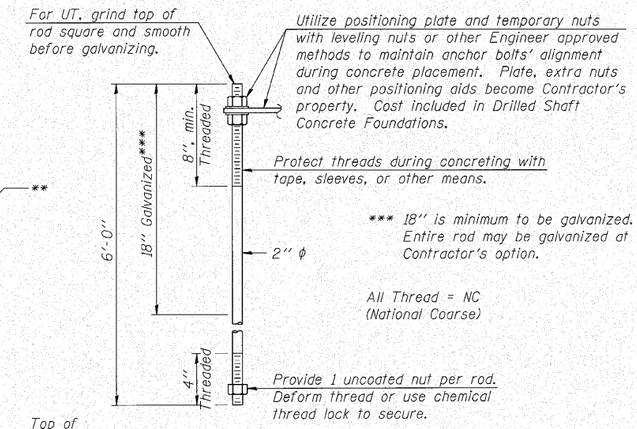

ANCHOR ROD DETAIL

Anchor rods shall conform to AASHTO M314 Grade 105 and meet Charpy V-Notch (CVN) energy of 15 lb.-ft. at 10° F. before galvanizing. Galvanize the upper 18" (minimum***) and associated M291, Grade A, C or DH heavy hex nuts and hardened washers per AASHTO M232. No welding shall be permitted on rods. Provide an unfinished nut at bottom, a hexagon locknut and washer above base plate and a leveling nut and washer below base plate. Nuts shall each be tightened with 200 lb.-ft. minimum torque against base plate. Before or after threading, but before galvanizing, each anchor rod shall be ultrasonically tested (UT) by a Level II or III inspector, qualified in accord with ANSI guidelines, using a straight beam, 1/2" ϕ 3.5 mhz. transducer, to insure no rejectable flaws exist in the upper 18" (tension criteria). Cost of testing included in Drilled Shaft Concrete Foundations.

Structure Number	Station	H
1C099I080L139.2	778+15	20'-10"

Note: "H" based on 15'-0" or actual sign height, whichever is greater.

OSC-A-5 7-1-10

LIN ENGINEERING, LTD.
Consulting Engineers
Chatham, Illinois

USER NAME =	DESIGNED - ADB	REVISED -	
	CHECKED - MTH	REVISED -	
PLOT SCALE =	DRAWN - ADB	REVISED -	
PLOT DATE =	CHECKED - MTH	REVISED -	

STATE OF ILLINOIS
DEPARTMENT OF TRANSPORTATION

CANTILEVER SIGN STRUCTURES – TYPE II-C-A & III-C-A
TRUSS SUPPORT POST – ALUMINUM TRUSS & STEEL POST

SHEET NO. 5 OF 9 SHEETS

F.A.I. RTE.	SECTION	COUNTY	TOTAL SHEETS	SHEET NO.
80	99 (5&5-1) Y	WILL	276	131
		CONTRACT NO. 60147		
		ILLINOIS FED. AID PROJECT		

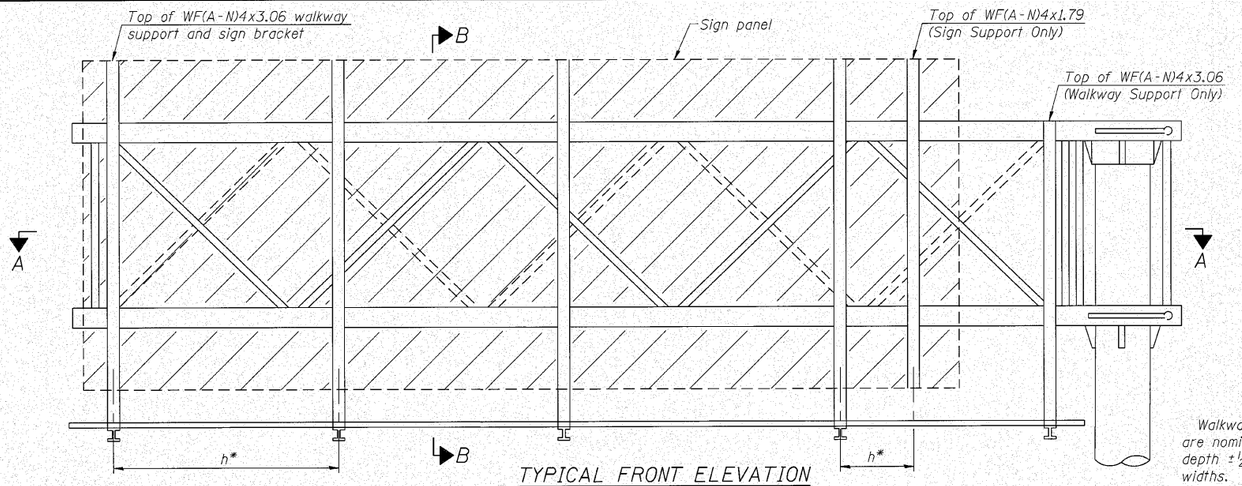

TYPICAL FRONT ELEVATION

With lights and handrail omitted for clarity.

Walkway and truss grating dimensions are nominal and may vary (width ±½", depth ±½") based on available standard widths.

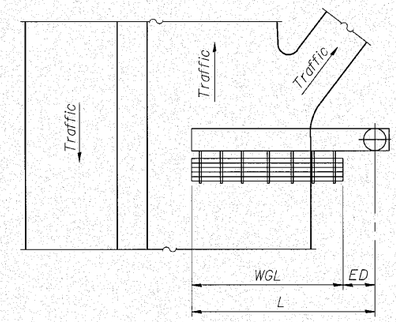

PLAN

WALKWAY AND HANDRAIL SKETCH

(Road plan beneath truss varies)

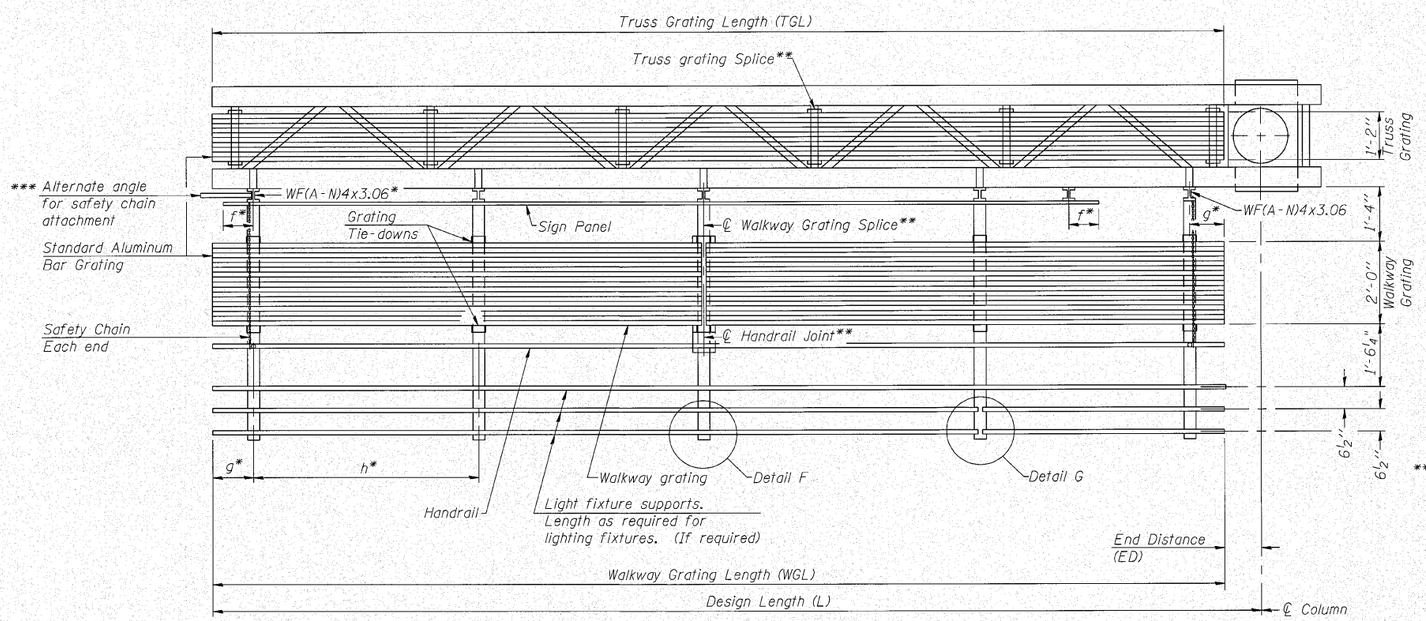

SECTION A-A

Structure Number	Station	WGL	ED	TGL
1C099I080L139.2	778+15	18'-3"	9'-6"	26'-3"

Notes:

* Space walkway brackets WF(A-N)4x3.06 and sign brackets WF(A-N)4x1.79 for efficiency and within limits shown:

f = 12" maximum, 4" minimum (End of sign to ℄ of nearest bracket)
g = 12" maximum, 4" minimum (End of walkway to ℄ of nearest bracket)
h = 6'-0" maximum (℄ to ℄ sign and/or walkway support brackets, WF(A-N)4x1.79 or WF(A-N)4x3.06)

*** If walkway bracket at safety chain location is behind sign, add angle to bracket. See alternate safety chain attachment on base sheet OSC-A-8

For details of sign placement, sign/walkway brackets, truss and walkway gratings, grating splices and Section B-B, see Base Sheet OSC-A-7.
For details of handrail, handrail joint, safety chain and Details F and G, see Base Sheet OSC-A-8.

Truss grating to facilitate inspection shall run full length of cantilevers. Cost of truss grating is included in Overhead Sign Structure Cantilever.

Handrail and walkway grating shall span a minimum of three brackets between splices.
** Use and location of handrail joints or grating splices are optional, based on lengths needed and material availability.

$$TGL = L - \left(\frac{\text{Post O.D.}}{2} + 6''\right)$$

BRACKET TABLE

WF(A-N)4x1.79 or WF(A-N)4x3.06
ASTM B308, Alloy 6061-T6

Sign Width		Number Brackets Required
Greater Than	Less Than or Equal To	
	8'-0"	2
8'-0"	14'-0"	3
14'-0"	20'-0"	4
20'-0"	26'-0"	5
26'-0"	32'-0"	6

OSC-A-6 7-1-10

LIN ENGINEERING, LTD. Consulting Engineers Chatham, Illinois

USER NAME =	DESIGNED - ADB	REVISED -	
	CHECKED - MTH	REVISED -	
PLOT SCALE =	DRAWN - ADB	REVISED -	
PLOT DATE =	CHECKED - MTH	REVISED -	

STATE OF ILLINOIS
DEPARTMENT OF TRANSPORTATION

CANTILEVER SIGN STRUCTURES – ALUMINUM WALKWAY
DETAILS – ALUMINUM TRUSS & STEEL POST

SHEET NO. 6 OF 9 SHEETS

F.A.I. RTE.	SECTION	COUNTY	TOTAL SHEETS	SHEET NO.
80	99 (5&5-1) Y	WILL	276	132

CONTRACT NO. 60I47

ILLINOIS FED. AID PROJECT

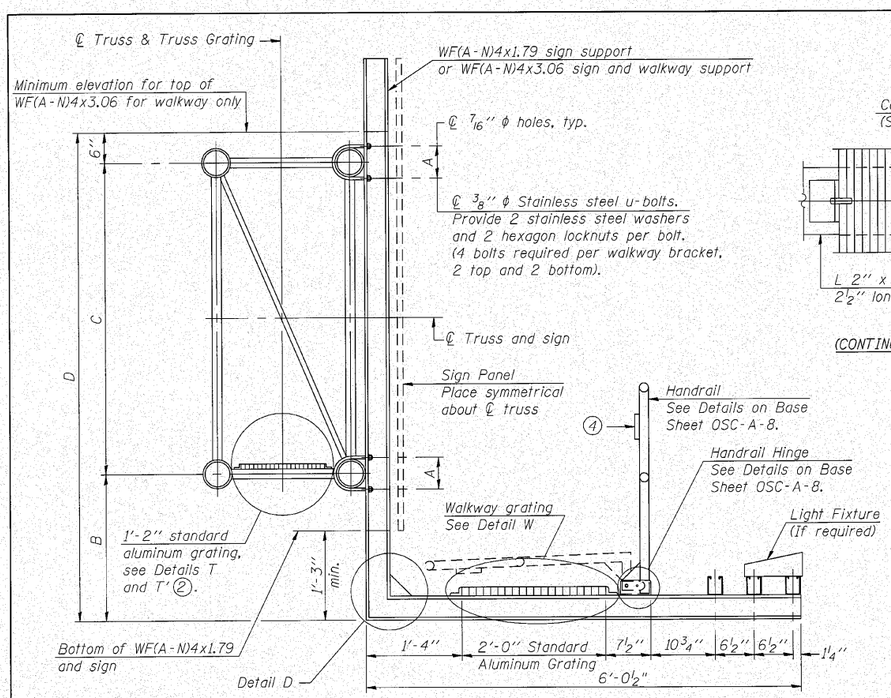

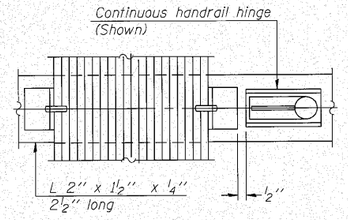

(CONTINUOUS WALKWAY GRATING)

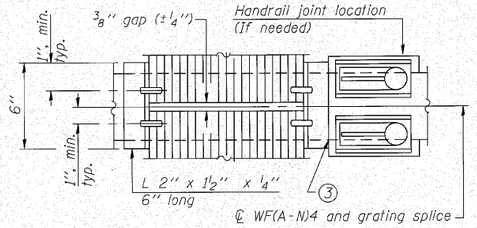

(AT WALKWAY GRATING SPLICE)

SPECIFICATIONS FOR STANDARD ALUMINUM GRATING

Main Bearing Bars (MBB) shall be 3/16" x 1 1/2" on 1 3/16" centers and conform to ASTM B211 Alloy 6061-T6.

Cross bars (CB) shall be 3/16" x 1 1/2" on 4" centers and conform to ASTM B221 Alloy 6063-T5 or 6061-T6.

OR

Aluminum Grating with modified "t" sections for main bearing bars shall meet the following requirements:

Main bars shall conform to ASTM B221 Alloy 6061-T6 and have a minimum section modulus equal to 0.0705 in.^{3} per bar, a depth of 1 1/2", spaced on 1 3/16" centers.

Cross bars shall conform to ASTM B221 Alloy 6063-T5 or T-42 and spaced on 4" centers.

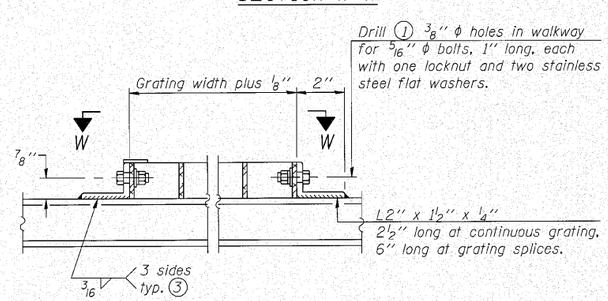

SECTION W-W

DETAIL W

(Walkway grating)

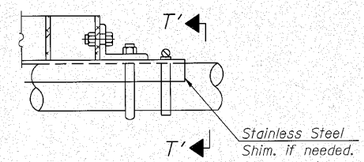

DETAIL T'

(Truss grating splice)

Details not shown same as Detail T.
Alternate materials may be used subject to the Engineer's review and approval.

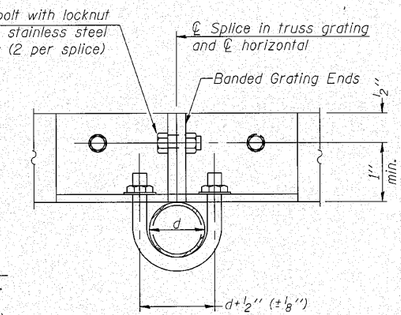

SECTION T'-T'

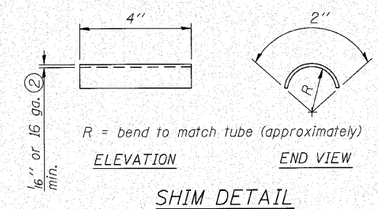

SHIM DETAIL

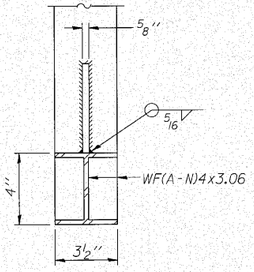

SECTION D-D

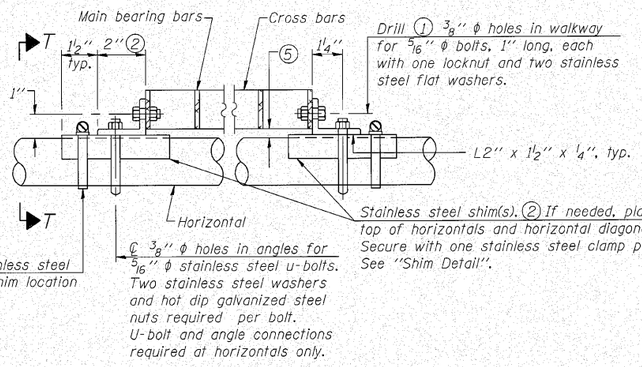

SECTION B-B

DETAIL T

(Continuous Truss grating)

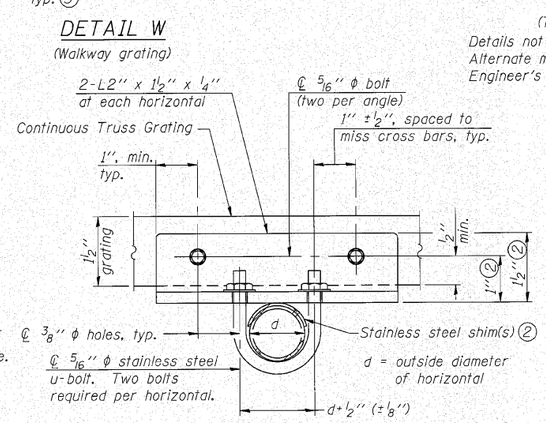

SECTION T-T

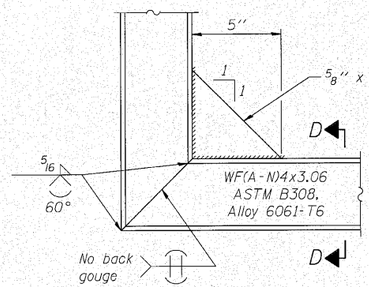

DETAIL D

Structure Number	Station	A	(6) B	C	(6) D
1C099 1080L 139.2	778+15	7"	3'-9"	5'-6"	9'-9"

(1) Drilling holes in grating may be done in shop or field, based on Contractor's preference and subject to accurate alignment.

(2) Stainless steel shims shall be placed as shown in Detail T if needed to compensate for alignment variations between horizontal and diagonal pipes beyond adjustment provided by angles. Thicker shims may be used subject to shims performing properly.

(3) If Handrail Joint present, weld angle to WF(A-N)4 and 1/4" extension bars. (See Base Sheet OSC-A-8.)

(4) PL 1/8" x 1/2" x 2" welded to handrail posts to protect locations that contact grating.

(5) Tube to grating gap may vary from 0 to 1/2", max. to align walkway, allow for camber, etc.

(6) Based on actual sign height, D_S, given on OSC-A-1.

OSC-A-7 7-1-10

LIN ENGINEERING, LTD. Consulting Engineers Chatham, Illinois

USER NAME =	DESIGNED - ADB	REVISED -	
	CHECKED - MTH	REVISED -	
PLOT SCALE =	DRAWN - ADB	REVISED -	
PLOT DATE =	CHECKED - MTH	REVISED -	

STATE OF ILLINOIS
DEPARTMENT OF TRANSPORTATION

CANTILEVER SIGN STRUCTURES – WALKWAY DETAILS
ALUMINUM TRUSS & STEEL POST

SHEET NO. 7 OF 9 SHEETS

F.A.I. RTE.	SECTION	COUNTY	TOTAL SHEETS	SHEET NO.
80	99 (5&5-1) Y	WILL	276	133
		CONTRACT NO. 60147		
		ILLINOIS FED. AID PROJECT		

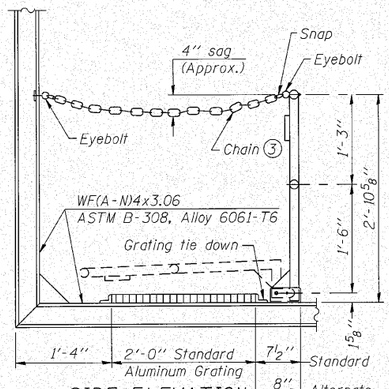

SIDE ELEVATION

(Showing Safety Chain W/O Sign)

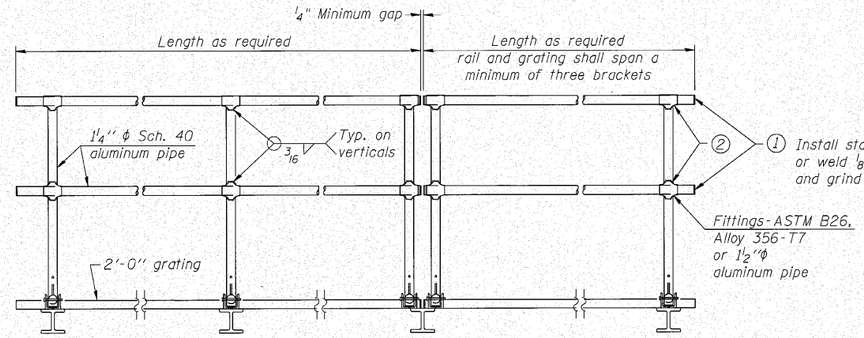

FRONT ELEVATION

HANDRAIL DETAILS

Handrail pipe shall be ASTM B241 or B429, Alloy 6063-T6 or Alloy 6061-T6.

(2) Horizontal handrail member shall be continuous thru fitting. Provide 7/16" ϕ hole in fitting for 3/8" ϕ bolt. Field drill 7/16" ϕ hole in horizontal rail member. Provide locknut and two stainless steel washers for bolt. (Use 5/16" eyebolts in 7/16" ϕ holes on top rail at ends only.)

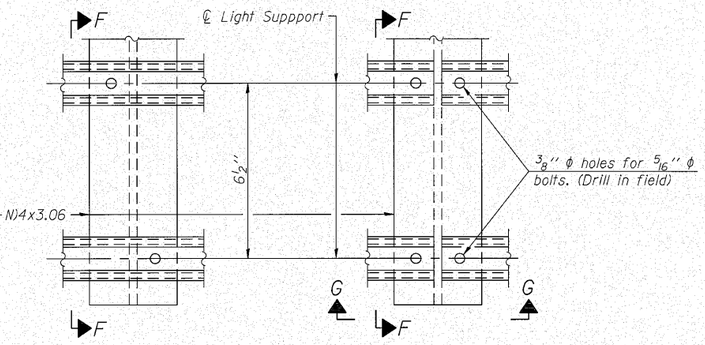

DETAIL F

DETAIL G

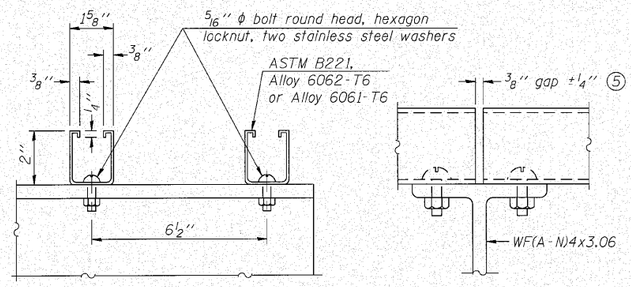

SECTION F-F

SECTION G-G

LIGHTING FIXTURE MOUNTS (IF REQUIRED)

(5) Field cut ends of light support channels shall be free of burrs or hazardous projections and coated with zinc-rich primer or equivalent.

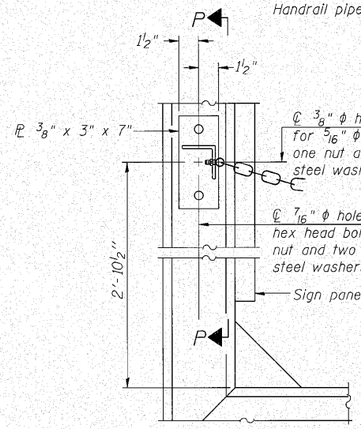

ALTERNATE SAFETY CHAIN ATTACHMENT

(With Sign Present)

Items not shown same as "Side Elevation" of "Handrail Details"

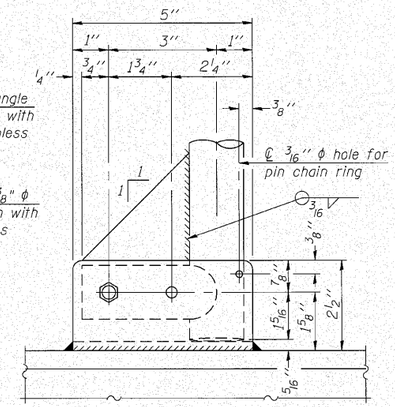

SIDE ELEVATION

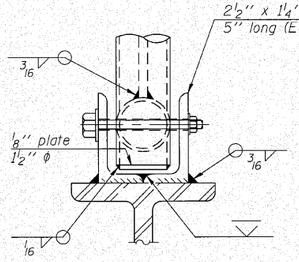

FRONT ELEVATION

Details not shown same as "ELEVATION" at right.

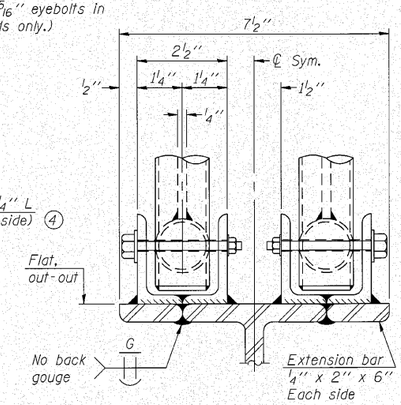

ELEVATION AT HANDRAIL JOINT (4)

Details not shown same as "FRONT ELEVATION"

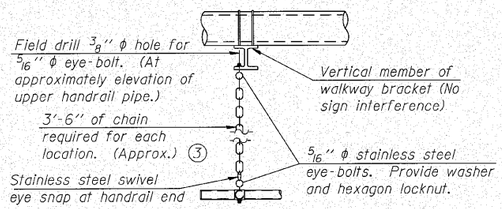

SAFETY CHAIN

One required for each end of each walkway.

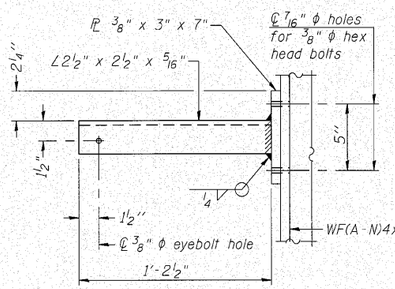

SECTION P-P

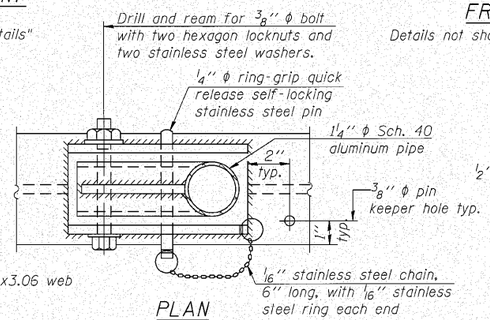

PLAN

DETAIL E HANDRAIL HINGE

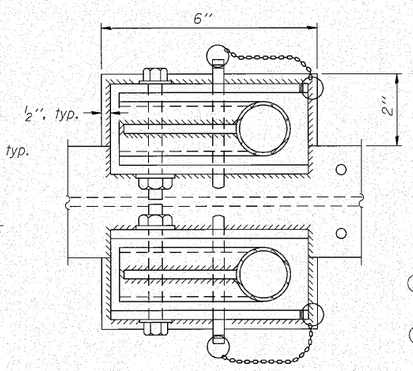

PLAN AT HANDRAIL JOINT

Details not shown same as "PLAN"

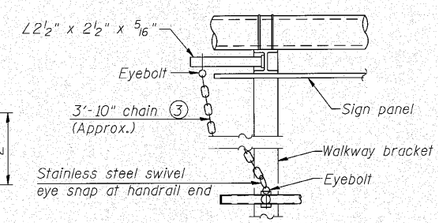

ALTERNATE SAFETY CHAIN ATTACHMENT

Details not shown similar to "Safety Chain" Details

(Walkway omitted for clarity)

(3) 3/16" Type 304L stainless steel chain, approximately 12 links per foot.

(4) Extrusions may be used in lieu of the details shown, with approval of the Engineer.

OSC-A-8 7-1-10

LIN ENGINEERING, LTD. Consulting Engineers Chatham, Illinois	USER NAME =	DESIGNED - ADB	REVISED -	STATE OF ILLINOIS DEPARTMENT OF TRANSPORTATION
		CHECKED - MTH	REVISED -	
	PLOT SCALE =	DRAWN - ADB	REVISED -	
	PLOT DATE =	CHECKED - MTH	REVISED -	

CANTILEVER SIGN STRUCTURES – HANDRAIL DETAILS
ALUMINUM TRUSS & STEEL POST

SHEET NO. 8 OF 9 SHEETS

F.A.I. RTE.	SECTION	COUNTY	TOTAL SHEETS	SHEET NO.
80	99 (5&5-1) Y	WILL	276	134
		CONTRACT NO. 60147		
		ILLINOIS FED. AID PROJECT		

* Grind anchor rod to bright finish at ground clamp location before installing clamp.

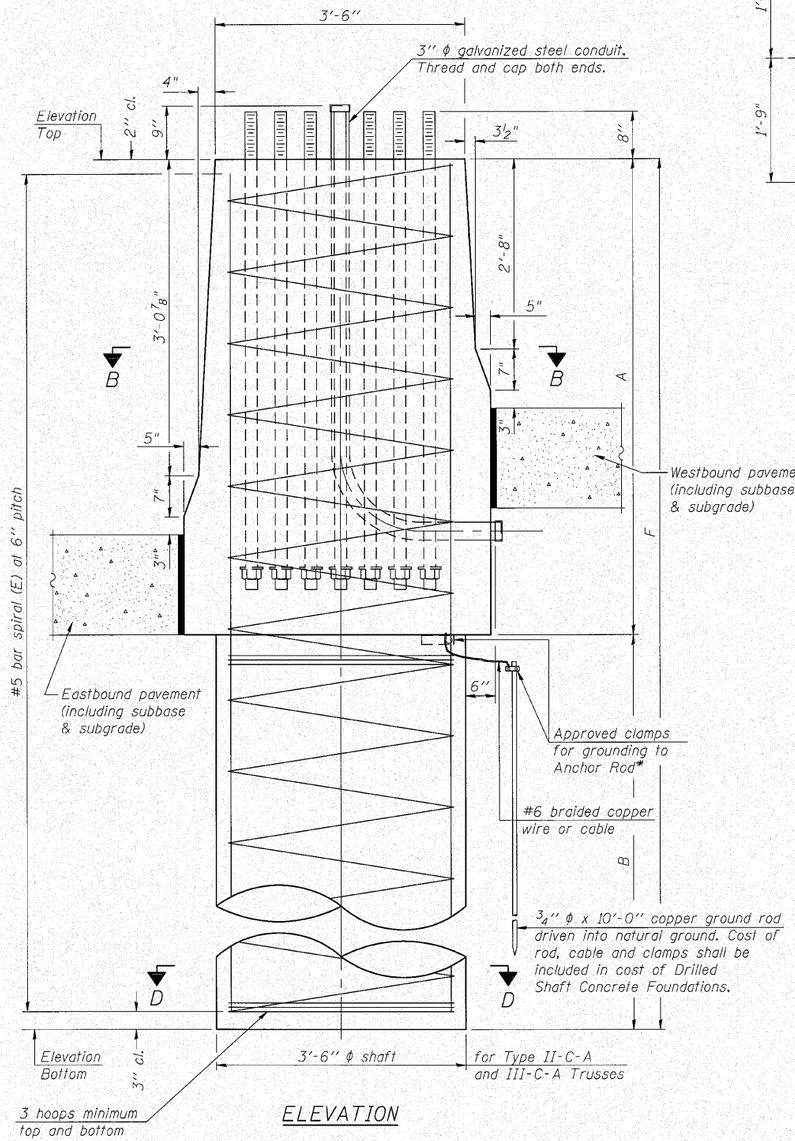

ELEVATION

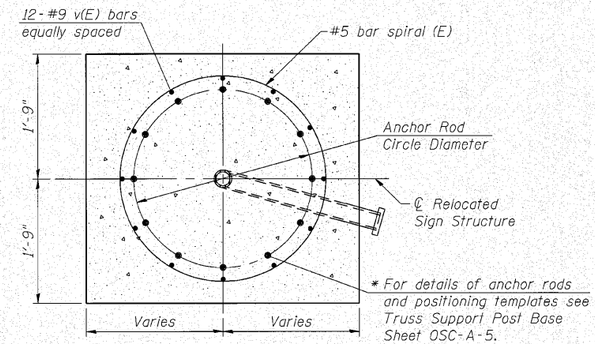

SECTION B-B

3'-6" ϕ shaft

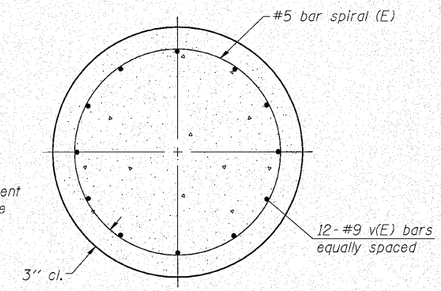

SECTION D-D

3'-6" ϕ shaft

NOTES:

The foundation dimensions shown in the Foundation Design Table are based on the presence of mostly cohesive soils with an average Unconfined Compressive Strength (Qu) of at least 1.25 tsf, which must be determined by previous soil investigations at the jobsite. When other conditions are indicated, the boring data will be included in the plans and the foundation dimensions shown in the Foundation Data Table will be the result of site specific designs.

If the conditions encountered are different than those indicated, the Contractor shall notify the Engineer to determine if the foundation dimensions need to be modified. If dimensions "B" or "F" are revised by more than 12" by the Contractor, "as-built" plans shall be prepared and submitted to the District Bureau of Operations for future reference.

No sonotubes or decomposable forms shall be used below the lower conduit entrance. Permanent metal forms or other shielding may not be left in place below that elevation without the Engineer's written permission.

Concrete shall be placed monolithically, without construction joints.

Backfill shall be placed per Article 502 of Standard Specification and prior to erection of support column.

A normal surface finish followed by a Bridge Seat Sealer application will be required on concrete surfaces above the lowest elevation 6" below finished ground line. Cost included in "Drilled Shaft Concrete Foundation".

FOUNDATION DESIGN TABLE

Truss Type	Post Base Sheet	Maximum CantileverLength (ft)	Maximum Total Sign Area (sq ft)	Shaft Diameter (ft)	"B" Depth (ft)	Anchor Rods		Anchor Rod Circle Diameter (in)
						No.	Diameter (in)	
I-C-A	OSC-A-4	25	170	3.0	16.0	8	2	22
II-C-A	OSC-A-5	30	170	3.5	17.0	12	2	30
II-C-A	OSC-A-5	30	340	3.5	21.5	12	2	30
III-C-A	OSC-A-5	35	170	3.5	19.0	12	2	30
III-C-A	OSC-A-5	35	250	3.5	22.5	12	2	30
III-C-A	OSC-A-5	35	400	3.5	26.5	12	2	30
III-C-A	OSC-A-5	40	400	3.5	32.0	12	2	30

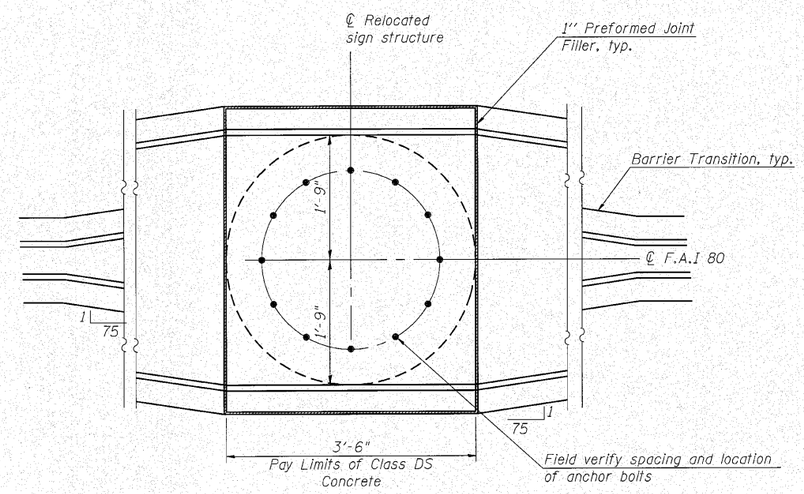

PLAN

FOUNDATION DATA TABLE

Structure Number	Station	Truss Type	Shaft Diameter	Elevation Top	Elevation Bottom	Qu	A	B	F	Class DS Concrete Cubic Yards
IC0991080L139.2	778+15	II-C-A	3'-6"	680.27	652.35		6'-5"	21'-6"	27'-11"	11.4

LIN ENGINEERING, LTD.
Consulting Engineers
Chatham, Illinois

USER NAME =	DESIGNED - ADB	REVISED -	
	CHECKED - MTH	REVISED -	
PLOT SCALE =	DRAWN - ADB	REVISED -	
PLOT DATE =	CHECKED - MTH	REVISED -	

STATE OF ILLINOIS
DEPARTMENT OF TRANSPORTATION

CANTILEVER SIGN STRUCTURES – DRILLED SHAFT
ALUMINUM TRUSS & STEEL POST

SHEET NO. 9 OF 9 SHEETS

F.A.I. RTE.	SECTION	COUNTY	TOTAL SHEETS	SHEET NO.
80	99 (5&5-1) Y	WILL	276	135

CONTRACT NO. 60147

ILLINOIS FED. AID PROJECT

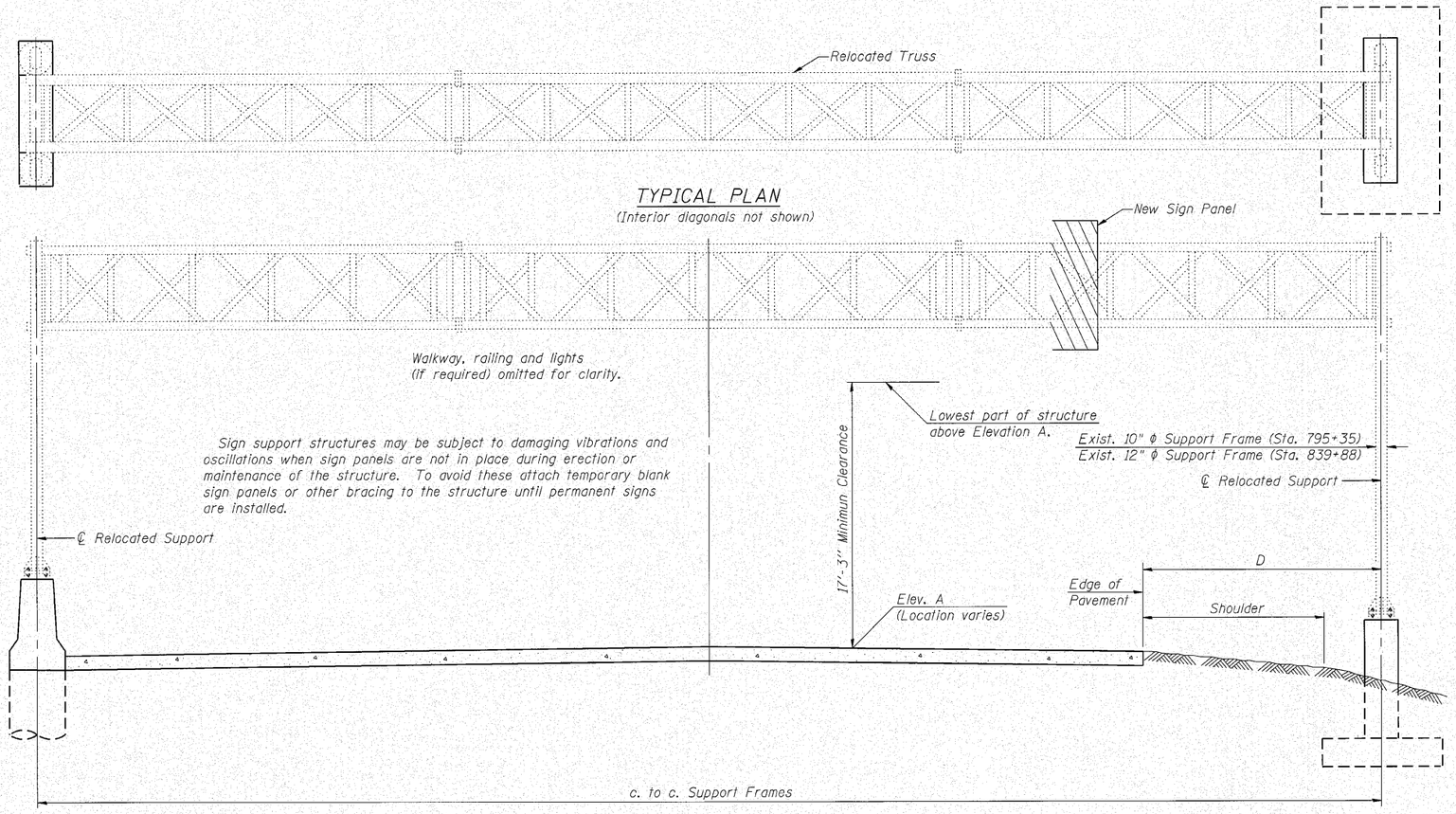

TYPICAL PLAN

(Interior diagonals not shown)

TYPICAL ELEVATION

(Looking at Face of Signs**)

Elev. A = Elevation at point of minimum clearance to sign, walkway support or truss.

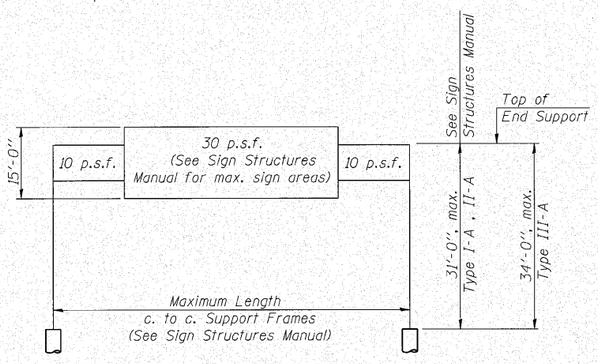

DESIGN WIND LOADING DIAGRAM

Parameters shown are basis for I.D.O.T. Standards and Sign Manual Tables. Installations not within dimensional limits shown require special analysis for all components.

Structure Number	Station	Design Truss Type	c. to c. Supports	Elev. A	Dim. D	Height of Tallest Sign	Total Sign Area
1S099I080R139.5	795+35	II	110'-0"	N.A.	N.A.	11'-0"	516 sq.ft.
1S099I080L140.3	839+88	III	120'-0"	N.A.	N.A.	13'-0"	518 sq.ft.

**Looking upstation for structures with signs both sides.

* If M270 Gr. 50W (M222) steel is proposed, chemistry for plate to be used shall first be approved by the Engineer as suitable for galvanizing and welding.

GENERAL NOTES

DESIGN: AASHTO Standard Specifications for Structural Supports for Highway Signs, Luminaires and Traffic Signals. ("AASHTO Specifications")

CONSTRUCTION: Current (at time of letting) Illinois Department of Transportation Standard Specifications for Road and Bridge Construction, Supplemental Specifications and Special Provisions. ("Standard Specifications")

LOADING: 90 M.P.H. WIND VELOCITY

WALKWAY LOADING: Dead load plus 500 lbs. concentrated live load.

DESIGN STRESSES:
Field Units
f'c = 3,500 p.s.i.
fy = 60,000 p.s.i. (reinforcement)

WELDING: All welds to be continuous unless otherwise shown. All welding to be done in accordance with current AWS D1.1 and D1.2 Structural Welding Codes (Steel and Aluminum) and the Standard Specificiations.

MATERIALS: Aluminum Alloys as shown throughout plans. All Structural Steel Pipe shall be ASTM A53 Grade B or A500 Grade B or C. If A500 pipe is substituted for A53, then the outside diameter shall be as detailed and wall thickness greater than or equal to A53. All Structural Steel Plates and Shapes shall conform to AASHTO M270 Gr. 36, Gr. 50 or Gr. 50W*. Stainless steel for shims, sleeves and handhole covers shall be ASTM A240, Type 302 or 304, or another alloy suitable for exterior exposure and acceptable to the Engineer.
The steel pipe and stiffening ribs at the base plate for the column shall have a minimum longitudinal Charpy V-Notch (CVN) energy of 15 lb.-ft. at 40° F. (Zone 2) before galvanizing.

FASTENERS FOR ALUMINUM TRUSSES: All bolts noted as "high strength" must satisfy the requirements of AASHTO M164 (ASTM A325), or approved alternate, and must have matching lock nuts. Threaded studs for splices (if Members interfere) must satisfy the requirements of ASTM A449, ASTM A193, Grade B7, or approved alternate, and must have matching lock nuts. Bolts and lock nuts not required to be high strength must satisfy the requirements of ASTM A307. All bolts and lock nuts must be hot dip galvanized per AASHTO M232. The lock nuts must have nylon or steel inserts. A stainless steel flat washer conforming to ASTM A240 Type 302 or 304, is required under both head and nut or under both nuts where threaded studs are used. High strength bolt installation shall conform to Article 505.04 (f) (2)d of the IDOT Standard Specifications for Road and Bridge Construction. Rotational capacity ("ROCAP") testing of bolts will not be required.

U-BOLTS AND EYEBOLTS: U-Bolts and Eyebolts must be produced from ASTM A276 Type 304, 304L, 316 or 316L, Condition A, cold finished stainless steel, or an equivalent material acceptable to the Engineer. All nuts for U-Bolts and Eyebolts must be lock nuts equivalent to ASTM A307 with nylon or steel inserts and hot dip galvanized per AASHTO M232. A stainless steel flat washer conforming to ASTM A240, Type 302 or 304, is required under each U-Bolt and Eyebolt lock nut.

GALVANIZING: All Steel Grating, Plates, Shapes and Pipe shall be Hot Dip Galvanized after fabrication in accordance with AASHTO M111. Painting is not permitted.

ANCHOR RODS: Shall conform to AASHTO M314 Gr. 36, 55 or 105 with a minimum Charpy V-Notch (CVN) energy of 15 lb.-ft. at 40° F.

CONCRETE SURFACES: All concrete surfaces above an elevation 6" below the lowest final ground line at each foundation shall be cleaned and coated with Bridge Seat Sealer in accordance with the Standard Specifications.

REINFORCEMENT BARS: Reinforcement Bars designated (E) shall be epoxy coated in accordance with the Standard Specifications.

FOUNDATIONS: The contract unit price for Concrete Foundations and Drilled Shaft Concrete Foundations shall include reinforcement bars complete in place.

TOTAL BILL OF MATERIAL

ITEM	UNIT	TOTAL
RELOCATE OVERHEAD SIGN STRUCTURE-SPAN	Each	2
CONCRETE FOUNDATIONS	Cu. Yds.	24.4
OVERHEAD SIGN STRUCTURE WALKWAY	Foot	28
DRILLED SHAFT CONCRETE FOUNDATIONS	Cu. Yds.	53.5

Ciorba Group, Inc.
CONSULTING ENGINEERS
2007 Hoch Cumberland Avenue
Suite 430 Chicago, Illinois 60606
Tel. 773.775.8000
Fax 773.775.4011
Email chicago@ciorba.com

FILE NAME =	USER NAME = mthomas	DESIGNED - AMK	REVISED -
		CHECKED - BWS	REVISED -
	PLOT SCALE =	DRAWN - SAT	REVISED -
	PLOT DATE = 10/27/2010	CHECKED - BWS	REVISED -

STATE OF ILLINOIS
DEPARTMENT OF TRANSPORTATION

RELOCATED OVERHEAD SIGN STRUCTURES – GENERAL PLAN & ELEVATION – ALUMINUM TRUSS & STEEL SUPPORTS

SHEET NO. 1 OF 9 SHEETS

F.A.I. RTE.	SECTION	COUNTY	TOTAL SHEETS	SHEET NO.
80	99-5-Y	WILL	276	136
		CONTRACT NO. 60147		
		ILLINOIS FED. AID PROJECT		

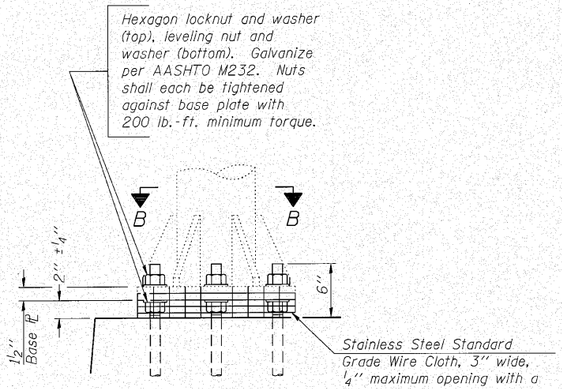

DETAIL B

Ribs shall be cut to fit slope of pipe.

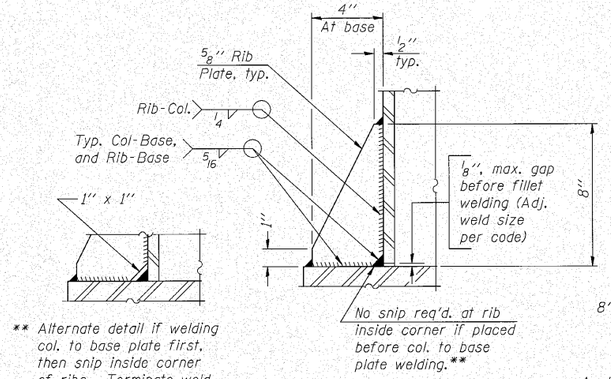

SECTION D-D

Existing

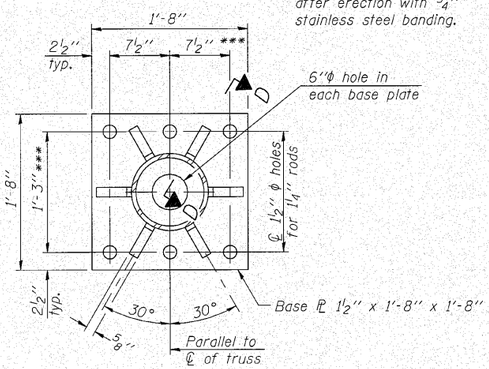

SECTION B-B

Existing

*** Verify existing dimensions. Holes in positioning plates and anchor plates shall match existing hole spacing.

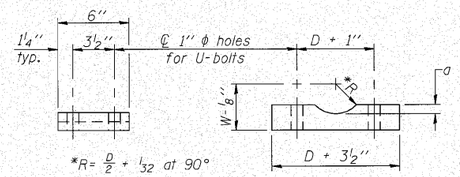

D = Outside Diameter of Chord.
For W, see Base Sheet OS-A-6.

SADDLE SHIM DETAIL

ASTM B26 Alloy 356-F
or
ASTM B209 Alloy 6061-T651
(4 required per sign truss)
Existing

Truss Chord Nominal Dia.	a
5''	3/4''
5 1/2''	13/16''
6''	7/8''
6 1/2''	15/16''
7''	1''

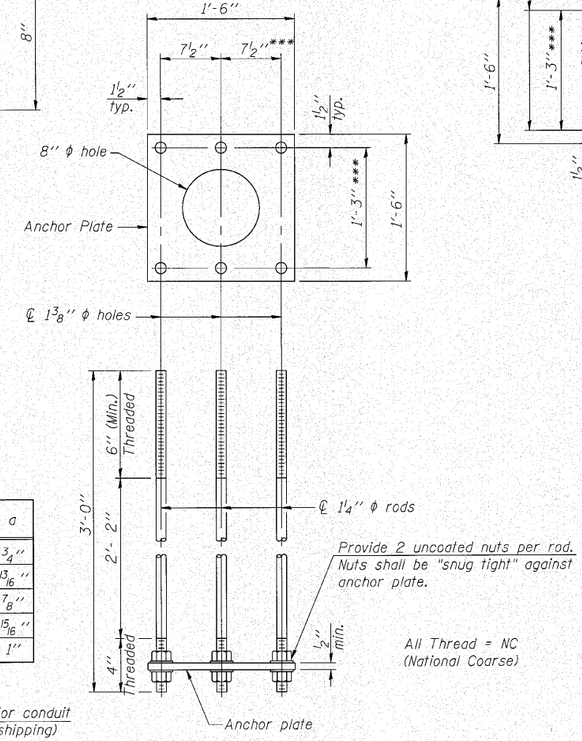

ANCHOR ROD DETAIL

Spread Footing Foundation

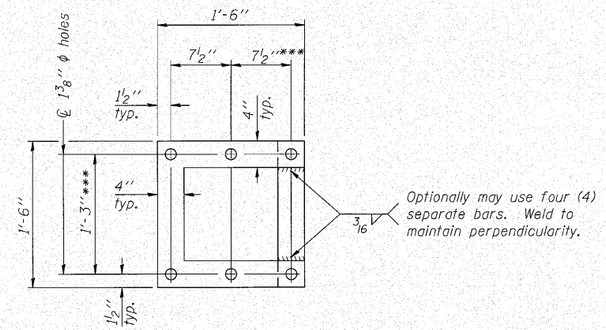

POSITIONING PLATE(S)

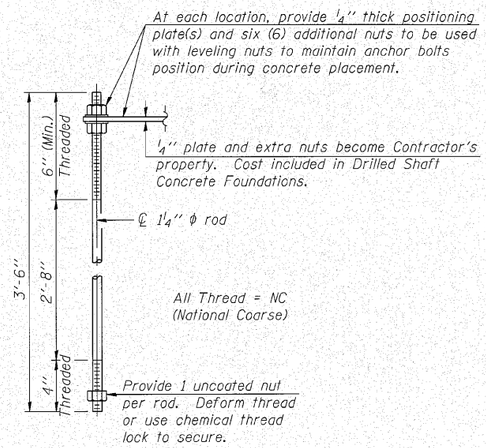

ANCHOR ROD DETAIL

Drilled Shaft Foundation

Anchor rods shall conform to AASHTO M314 Grade 36 or 50 and meet Charpy V-Notch (CVN) energy of 15 lb.-ft. at 40° F. Galvanize upper 12'' per AASHTO M232. No welding shall be permitted on rods.

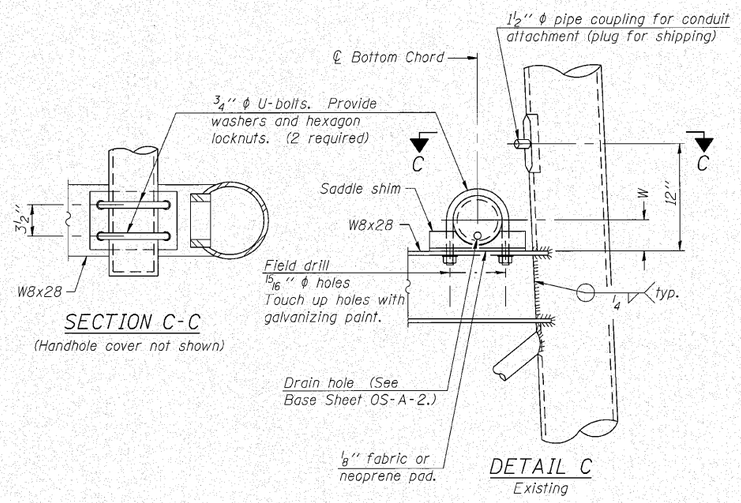

SECTION C-C

(Handhole cover not shown)

DETAIL C

Existing

TYPE II-A TRUSS
10'' Φ PIPE SUPPORT FRAME DETAILS

(Sta. 795+35)

OS-A-6A 7-1-10

FILE NAME =	USER NAME = mthomas	DESIGNED - AMK	REVISED -	STATE OF ILLINOIS DEPARTMENT OF TRANSPORTATION	OVERHEAD SIGN STRUCTURES SUPPORT FRAME DETAILS – ALUMINUM TRUSS	F.A.I. RTE.	SECTION	COUNTY	TOTAL SHEETS / SHEET NO.
Ciorba Group, Inc. CONSULTING ENGINEERS 2007 North Cumberland Avenue Suite 102 Chicago, Illinois 60656 Tel. 773.775.4009 Fax 773.775.4314 Email chicago@ciorba.com		CHECKED - BWS	REVISED -			80	99-5-Y	WILL	276 / 137
	PLOT SCALE =	DRAWN - SAT	REVISED -					CONTRACT NO. 60147	
	PLOT DATE = 10/27/2010	CHECKED - BWS	REVISED -		SHEET NO. 2 OF 9 SHEETS			ILLINOIS FED. AID PROJECT	

n:\proj\3384\2_west\design\structural\Overhead Sign Structure - Span\3384 I-80W 02 OS-A-6A.dgn

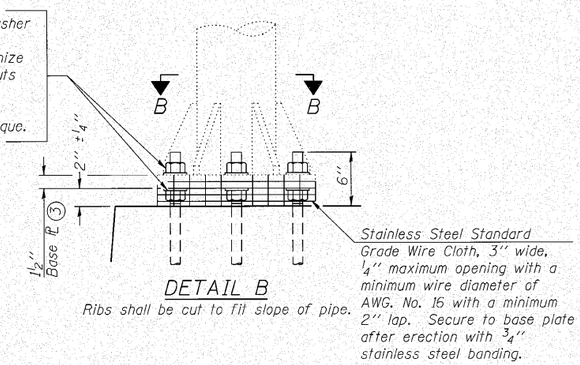

DETAIL B

Ribs shall be cut to fit slope of pipe.

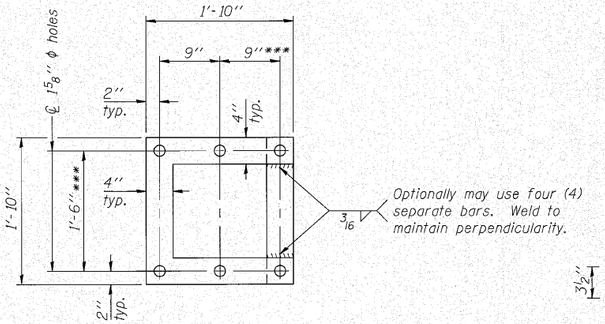

POSITIONING PLATE(S)

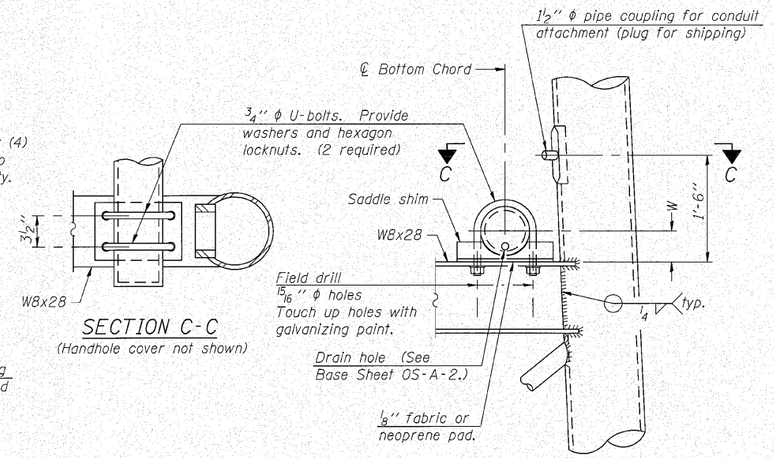

SECTION C-C

(Handhole cover not shown)

DETAIL C

Existing

*** Verify existing dimensions. Holes in positioning plates and anchor plates shall match existing hole spacing.

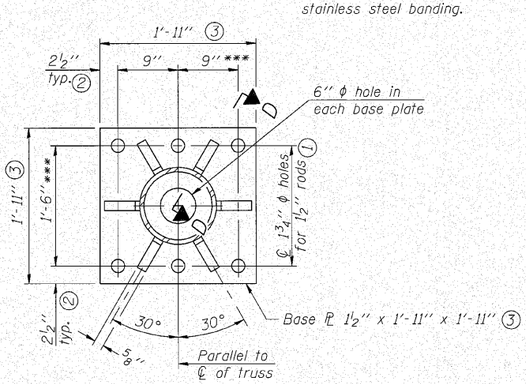

SECTION B-B

Existing

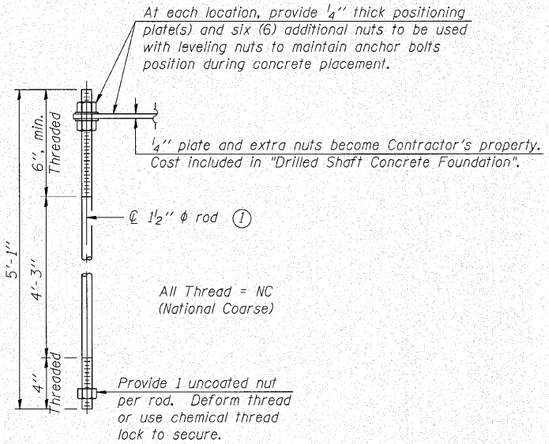

ANCHOR ROD DETAIL

Anchor rods shall conform to AASHTO M314 Grade 36 or 55 and meet Charpy V-Notch (CVN) energy of 15 lb.-ft. at 40° F. Galvanize upper 12'' per AASHTO M232. No welding shall be permitted on rods.

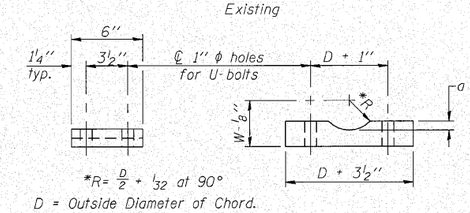

*R= D/2 + 1/32 at 90°

D = Outside Diameter of Chord.
For W, see Base Sheet OS-A-6.

Truss Chord Nominal Dia.	a
7''	1''
8 1/2''	1 1/4''
9''	1 3/8''

SADDLE SHIM DETAIL

ASTM B26 Alloy 356-F
or
ASTM B209 Alloy 6061-T651
(4 required per sign truss)
Existing

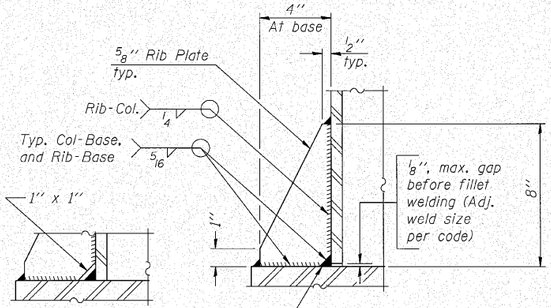

** Alternate detail if welding col. to base plate first, then snip inside corner of ribs. Terminate weld on rib 1/4'' from snip.

SECTION D-D

Existing

TYPE III-A TRUSS

12'' ϕ PIPE SUPPORT FRAME DETAILS

(Sta. 839+88)

Notes:

For Type III-A Truss spans greater than 150 ft. and up to 160 ft.:

① 1 3/4'' ϕ rod, 2'' ϕ holes

② 2 3/4'' edge distance

③ Base ℄ 1 5/8'' x 1'-11 1/2'' x 1'-11 1/2''

OS4-A-8aA 7-1-10

FILE NAME =	USER NAME = mthomas	DESIGNED - AMK	REVISED -
Clorba Group, Inc. CONSULTING ENGINEERS 5957 North Cumberland Avenue Suite 227 Chicago, Illinois 60656 Tel 773.775.4000 Fax 773.775.4005 Email chicago@clorba.com		CHECKED - BWS	REVISED -
	PLOT SCALE =	DRAWN - SAT	REVISED -
	PLOT DATE = 10/27/2010	CHECKED - BWS	REVISED -

STATE OF ILLINOIS
DEPARTMENT OF TRANSPORTATION

OVERHEAD SIGN STRUCTURES
SUPPORT FRAME FOR TYPE III-A ALUMINUM TRUSS

SHEET NO. 3 OF 9 SHEETS

F.A.I. RTE.	SECTION	COUNTY	TOTAL SHEETS	SHEET NO.
80	99-5-Y	WILL	276	138

CONTRACT NO. 60147

ILLINOIS FED. AID PROJECT

m:\proj\3364\2-west\design\structural\Overhead Sign Structure - Span\3384 I-80W 03 OS-A-8aA.dgn

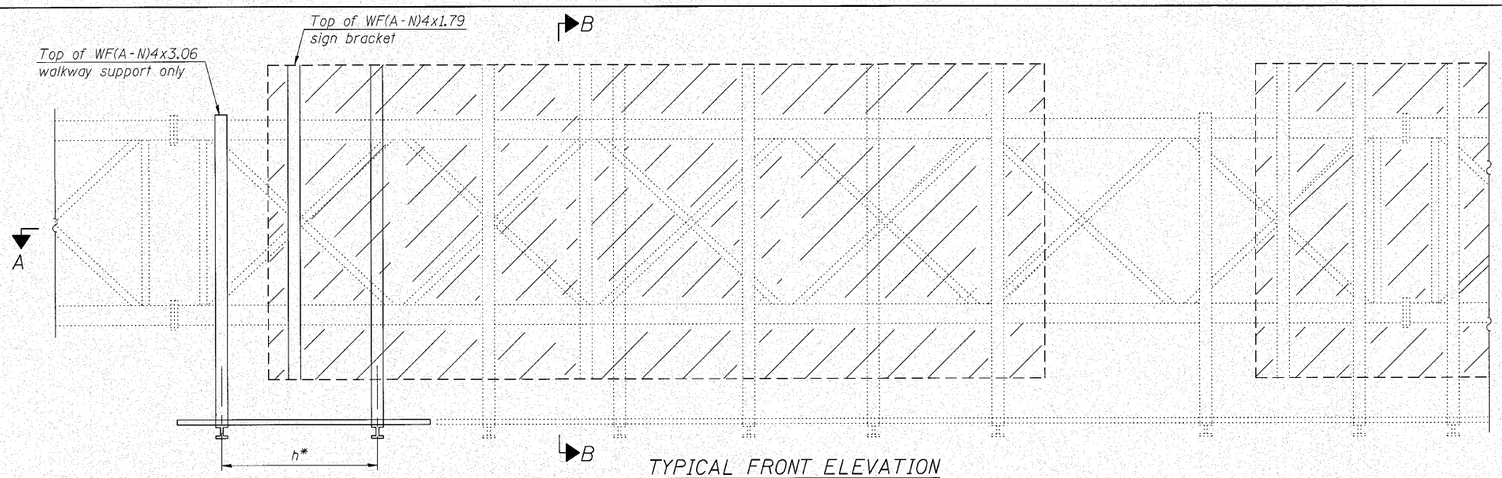

TYPICAL FRONT ELEVATION

With lights and handrail omitted for clarity.
For Section B-B, see Base Sheet OS-A-10.

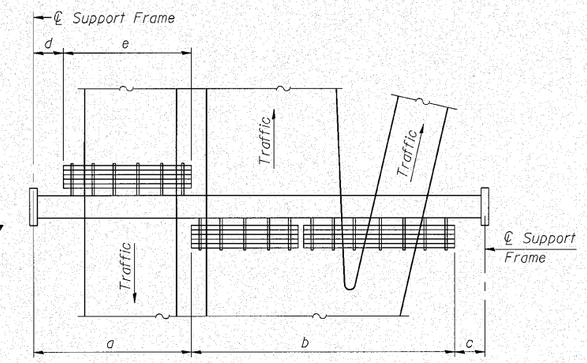

PLAN
WALKWAY AND HANDRAIL SKETCH

(Road plan beneath truss varies)

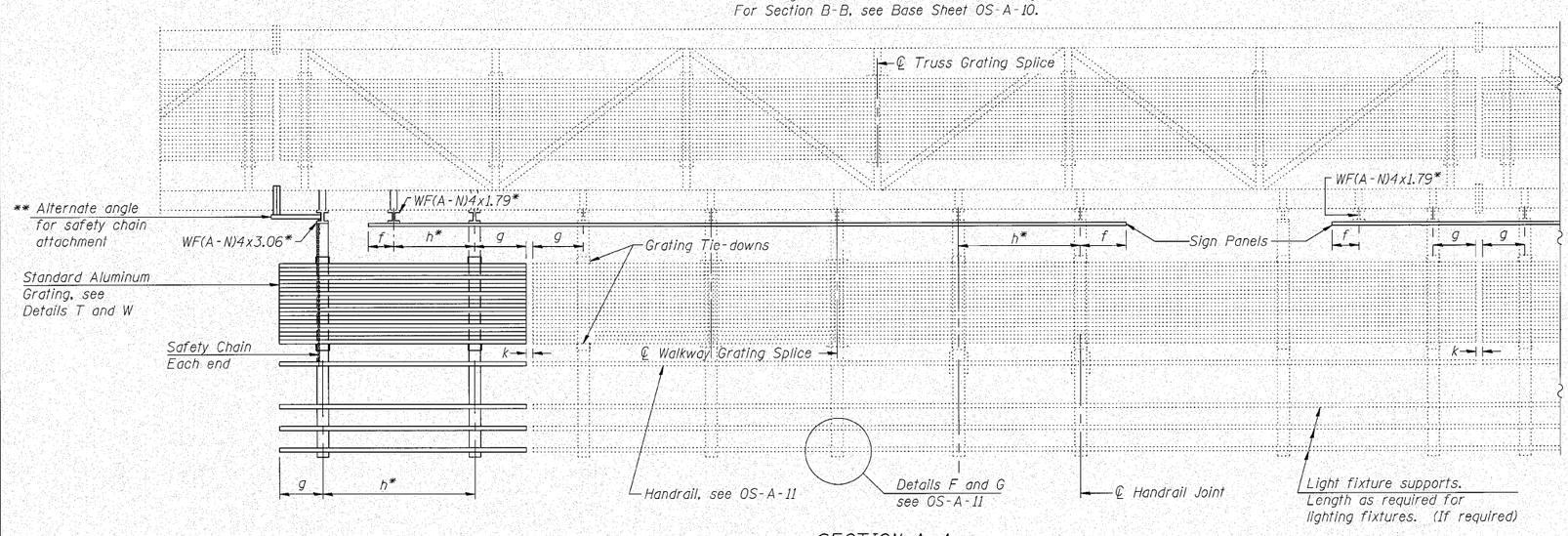

SECTION A-A

Handrail and walkway shall span a minimum of three brackets between splices and/or gap joints.
Place all sign and walkway brackets as close to panel points as practical.
Handrail joints, grating, and light support splices placed as needed.

BRACKET TABLE

WF(A-N)4x1.79 or WF(A-N)4x3.06 ASTM B308, Alloy 6061-T6		
Sign Width		Number Brackets Required
Greater Than	Less Than or Equal To	
	8'-0"	2
8'-0"	14'-0"	3
14'-0"	20'-0"	4
20'-0"	26'-0"	5
26'-0"	32'-0"	6

Notes:

* Space walkway brackets WF(A-N)4x3.06 and sign brackets WF(A-N)4x1.79 for efficiency and within limits shown:

f = 12" maximum, 4" minimum (End of sign to ℄ of nearest bracket)
g = 12" maximum, 4" minimum (End of walkway grating to ℄ of nearest support bracket)
h = 6'-0" maximum (℄ to ℄ sign and/or walkway support brackets, WF(A-N)4x1.79 or WF(A-N)4x3.06)
k = 2" maximum gap between adjacent walkway grating sections and handrail ends

** If walkway bracket at safety chain location is behind sign, add angle to bracket, see Alternate Safety Chain Attachment on Base Sheet OS-A-11.

For Details T and W, Section B-B and Grating Splice Details see Base Sheet OS-A-10.
For Handrail Details see Base Sheet OS-A-11.

Structure Number	Station	a	b	c	d	e	Walkway Grating and Handrail Lengths
IS099I080R139.5	795+35	14'-5"	56'-5"	39'-2"	N.A.	N.A.	12'-0"
IS099I080L140.3	839+88	14'-0"	70'-5"	35'-7"	N.A.	N.A.	16'-0"

Note: The new sign panels to be mounted on the relocated sign structure are wider than the existing. The cost of the additional sign brackets and related hardware shall be included with Sign Structure Walkway.

Truss grating to facilitate inspection shall run full length (center to center of support frames) ±12" on overhead trusses. Cost of truss grating is included in "Overhead Sign Structure".

Walkway and Truss Grating width dimensions are nominal and may vary ±½" based on available standard widths.

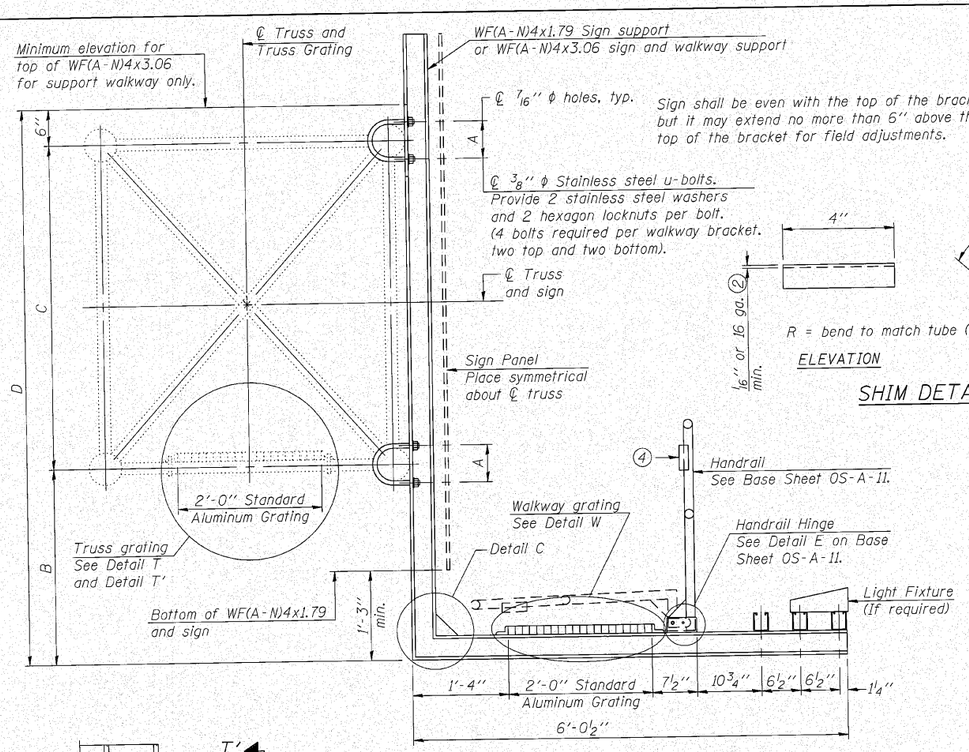

SECTION B-B

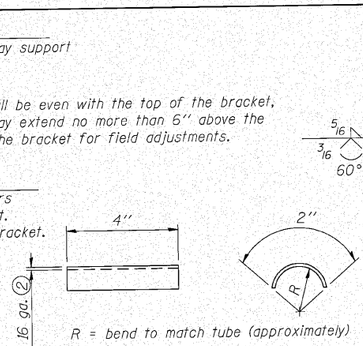

SHIM DETAIL

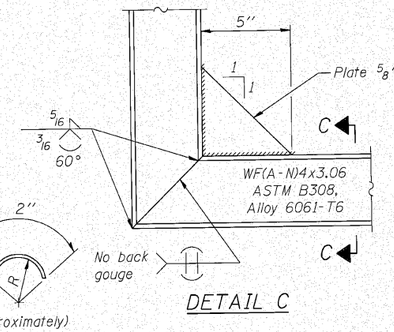

DETAIL C

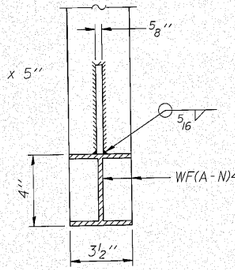

SECTION C-C

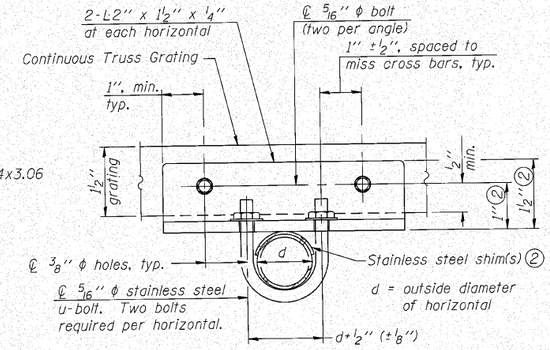

SECTION T-T

Existing

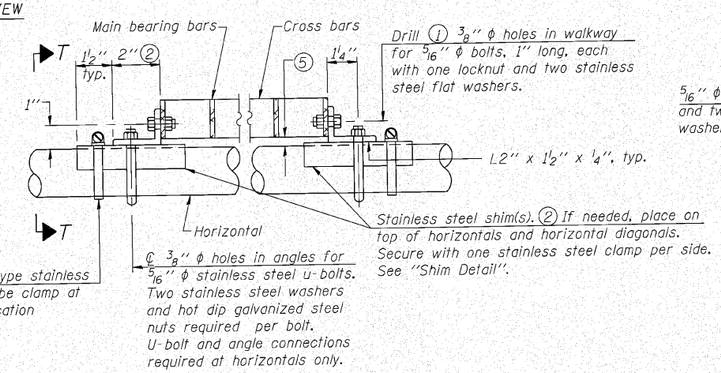

DETAIL T

(Existing Continuous Truss grating)

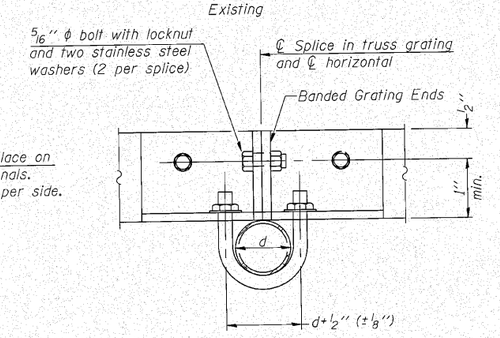

SECTION T'-T'

Existing

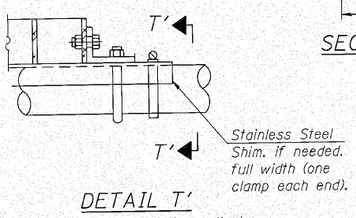

DETAIL T'

(Existing Truss grating splice)

Details not shown same as Detail T. Alternate materials may be used subject to the Engineer's review and approval.

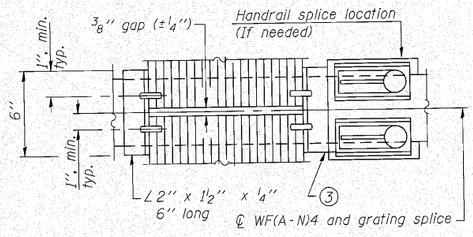

(AT WALKWAY GRATING SPLICE)

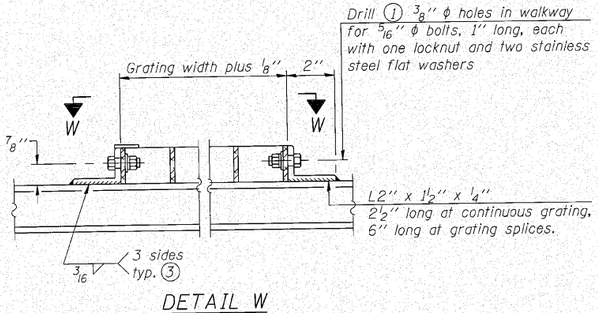

DETAIL W

(Walkway grating)

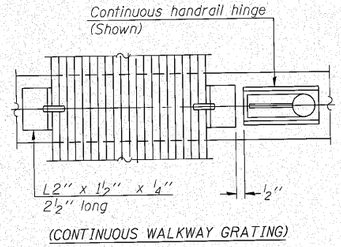

(CONTINUOUS WALKWAY GRATING)

SECTION W-W

SPECIFICATIONS FOR STANDARD ALUMINUM GRATING

Main Bearing Bars shall be 3/16" x 1½" on 1 3/16" centers and conform to ASTM B221 Alloy 6061-T6.

Cross bars shall be 3/16" x 1½" on 4" centers and conform to ASTM B221 Alloy 6063-T5 or 6061-T6.

OR

Aluminum Grating with modified "t" sections for main bearing bars shall meet the following requirements:

Main bars shall conform to ASTM B221 Alloy 6061-T6 and have a minimum section modulus equal to 0.0705 in.^{3} per bar, a depth of 1½", spaced on 1 3/16" centers.

Cross bars shall conform to ASTM B221 Alloy 6063-T5 or T-42 and spaced on 4" centers.

Structure Number	Station	A	⑥ B	C	⑥ D
1S099I080R139.5	795+35	6" *	3'-3"	7'-0"	10'-9"
1S099I080L140.3	839+88	6" *	4'-3"	7'-0"	11'-9"

* Assuming 5 3/8" O.D. Truss Chords. Field verify truss chord O.D. prior to fabrication.

① Drilling holes in grating may be done in shop or field, based on Contractor's preference and subject to accurate alignment.

② Stainless steel shims shall be placed as shown in Detail T if needed to compensate for alignment variations between horizontal and diagonal pipes beyond adjustment provided by angles. Thicker shims may be used subject to shims performing properly.

③ If Handrail Joint present, weld angle to WF(A-N)4 and ¼" extension bars. (See Base Sheet OS-A-11.)

④ PL ⅛" x ½" x 2" welded to handrail posts to protect locations that contact grating.

⑤ Tube to grating gap may vary from 0 to ½", max. to align walkway, allow for camber, etc.

⑥ Based on actual height of tallest sign given on OS-A-1.

n:\proj\33841\2_west\design\structural\Overhead Sign Structure - Span\33841-80W 05 OS-A-10.dgn

FILE NAME =	USER NAME = mthomas	DESIGNED - AMK	REVISED -
Ciorba Group, Inc. CONSULTING ENGINEERS 5151 North Cumberland Avenue Suite 205 Chicago, Illinois 60656 Tel 773.774.4000 Fax 773.774.4534 Email chicago@ciorba.com		CHECKED - BWS	REVISED -
	PLOT SCALE =	DRAWN - SAT	REVISED -
	PLOT DATE = 10/27/2010	CHECKED - BWS	REVISED -

STATE OF ILLINOIS
DEPARTMENT OF TRANSPORTATION

OVERHEAD SIGN STRUCTURES
ALUMINUM WALKWAY DETAILS

SHEET NO. 5 OF 9 SHEETS

F.A.I. RTE.	SECTION	COUNTY	TOTAL SHEETS	SHEET NO.
80	99-5-Y	WILL	276	140
		CONTRACT NO. 60147		
		ILLINOIS FED. AID PROJECT		

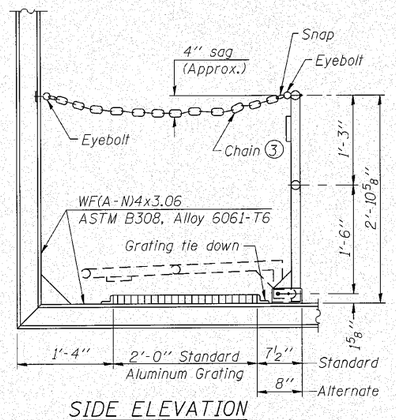

SIDE ELEVATION
(Showing safety chain w/o sign)

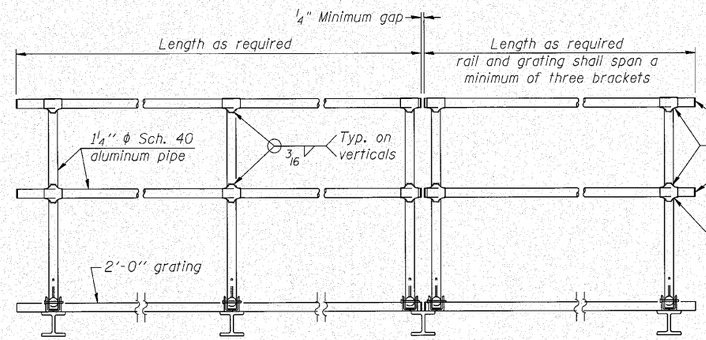

(1) Install standard force-fit end caps or weld 1/8" end plates with 1/8" c.f.w. and grind smooth. (All rail ends)

Fittings-ASTM B26, Alloy 356-T7 or 1 1/2" ϕ aluminum pipe

FRONT ELEVATION

(2) Horizontal handrail member shall be continuous thru fitting. Provide 7/16" ϕ hole in fitting for 3/8" ϕ bolt. Field drill 7/16" ϕ hole in horizontal rail member. Provide locknut and two stainless steel washers for bolt. (Use 5/16" eyebolts in 7/16"ϕ holes on top rail at ends only.)

HANDRAIL DETAILS
Handrail pipe shall be ASTM B241 or B429, Alloy 6063-T6 or Alloy 6061-T6.

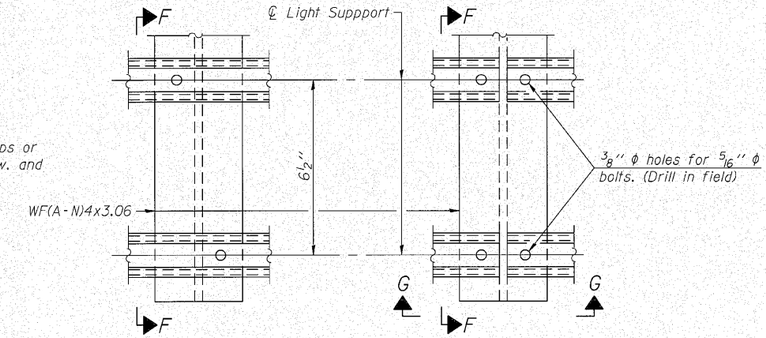

DETAIL F

DETAIL G

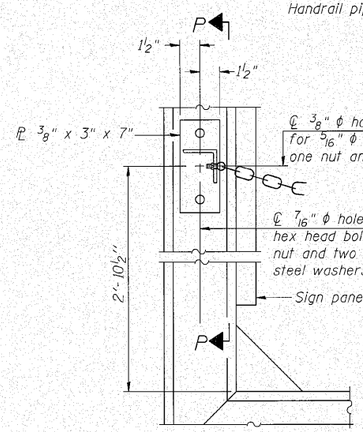

ALTERNATE SAFETY CHAIN ATTACHMENT
(With Sign Present)
Items not shown same as "Side Elevation" of "Handrail Details"

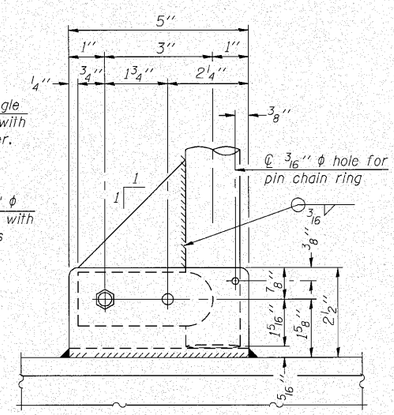

SIDE ELEVATION

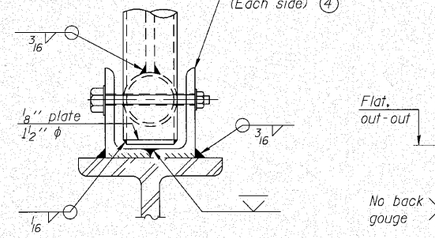

FRONT ELEVATION
See "Elevation" at right for dimensions.

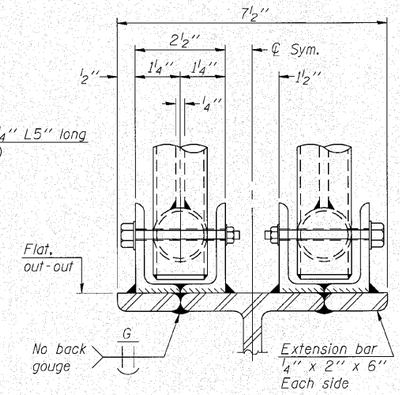

ELEVATION AT HANDRAIL JOINT (4)

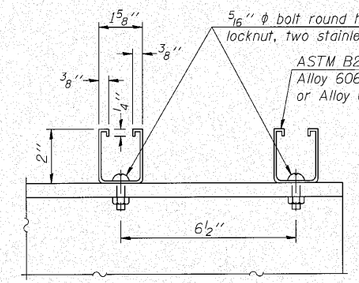

SECTION F-F

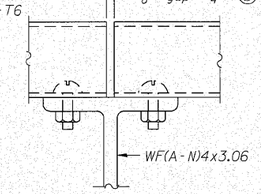

SECTION G-G

LIGHTING FIXTURE MOUNTS (IF REQUIRED)

(5) Field cut ends of light support channels shall be free of burrs or hazardous projections and coated with zinc-rich primer or equivalent.

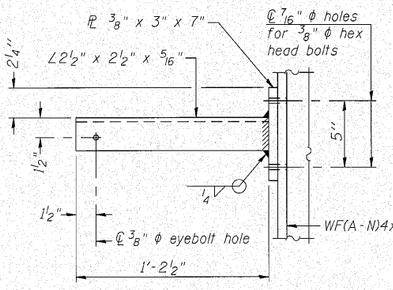

SECTION P-P

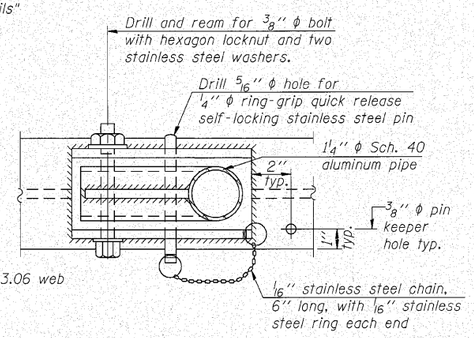

PLAN
DETAIL E HANDRAIL HINGE

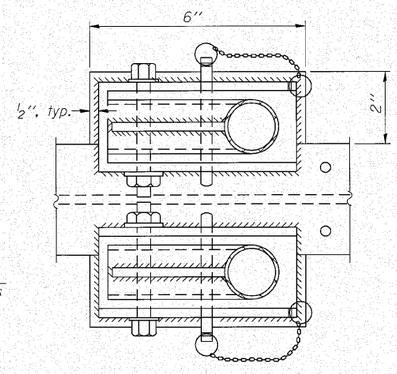

PLAN AT HANDRAIL JOINT
Details not shown same as "PLAN"

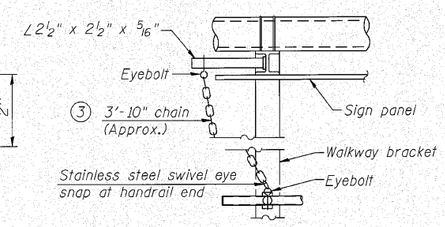

ALTERNATE SAFETY CHAIN ATTACHMENT
Details not shown similar to "Safety Chain" Details
(Walkway omitted for clarity)

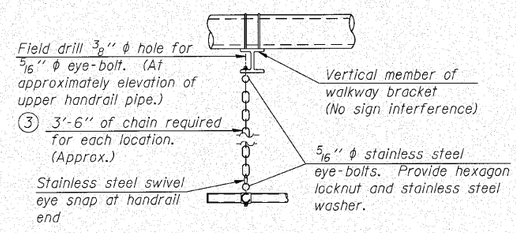

SAFETY CHAIN
One required for each end of each walkway.

(3) 3/16" Type 304L stainless steel chain, approximately 12 links per foot.

(4) Extrusions may be used in lieu of the details shown, with approval of the Engineer.

OS-A-11 7-1-10

FILE NAME =	USER NAME = mthomas	DESIGNED - AMK	REVISED -
Cierba Group, Inc. CONSULTING ENGINEERS 2007 North Cumberland Avenue Suite 100 Chicago, Illinois 60664 Tel. 773.775.4000 Fax 773.775.4014 Email chicago@cierba.com		CHECKED - BWS	REVISED -
	PLOT SCALE =	DRAWN - SAT	REVISED -
	PLOT DATE = 10/27/2012	CHECKED - BWS	REVISED -

STATE OF ILLINOIS
DEPARTMENT OF TRANSPORTATION

OVERHEAD SIGN STRUCTURES
ALUMINUM HANDRAIL DETAILS

SHEET NO. 6 OF 9 SHEETS

F.A.I. RTE.	SECTION	COUNTY	TOTAL SHEETS	SHEET NO.
80	99-5-Y	WILL	276	141
		CONTRACT NO. 60147		
		ILLINOIS FED. AID PROJECT		

n:\proj\3384\2_west\design\structural\Overhead Sign Structure - Span\3384 I-80W 06 OS-A-11.dgn

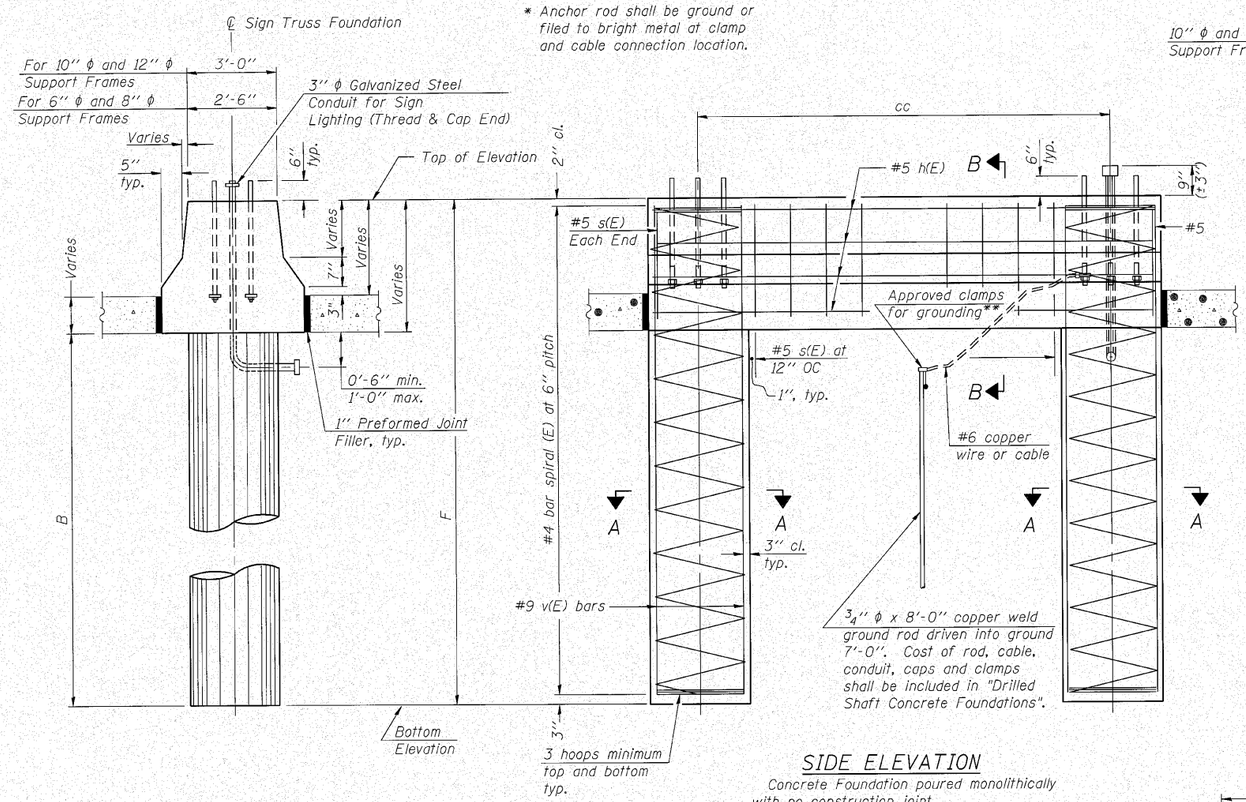

SIDE ELEVATION

Concrete Foundation poured monolithically with no construction joint.

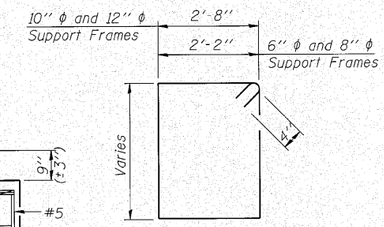

BAR s(E)

NOTES:

The foundation dimensions shown are based on the presence of mostly cohesive soils with an average Unconfined Compressive Strength (Qu) of at least 1.25 tsf, which must be determined by previous soil investigations at the jobsite. When other conditions are indicated, the boring data will be included in the plans and the foundation dimensions shown will be the result of site specific designs.

If the conditions encountered are different than those indicated, the Contractor shall notify the Engineer to determine if the foundation dimensions need to be modified. If dimensions "B" or "F" are revised by more than 12" by the Contractor, "as-built" plans shall be prepared and submitted to the District Bureau of Operations for future reference.

No sonotubes or decomposable forms shall be used below the lower conduit entrance.

Permanent metal forms or other shielding may not be left in place below that elevation without the Engineer's written permission.

Concrete shall be placed monolithically, without construction joints, unless otherwise noted.

Backfill shall be placed per Article 502 of Standard Specification and prior to erection of support column.

A normal surface finish followed by a Bridge Seat Sealer application will be required on concrete surfaces above the lowest elevation 6" below finished ground line. Cost included in Drilled Shaft Concrete Foundation.

Pipe Support Frames	cc	M	a	a/2
6"ϕ	7'-0"	9'-6"	0'-11"	5 1/2"
8"ϕ	7'-6"	10'-0"	1'-1 1/2"	6 3/4"
10"ϕ	8'-3"	11'-3"	1'-3"	7 1/2"
12"ϕ	9'-0"	12'-0"	1'-6"	9"

All dimensions in parenthesis are for 42" high barrier.

BAR LIST - EACH FOUNDATION

Bar	Number	Size	Length	Shape
h(E)	10	#5	M less 4"	——
s(E)	Varies	#5	Varies	□
v(E)	16	#9	F less 0'-5"	——
v(E)	24	#9	F less 0'-5"	——
#4(E) bar spiral _ see Side Elevation				

6" ϕ and 8" ϕ Support Frame

10" ϕ and 12" ϕ Support Frame

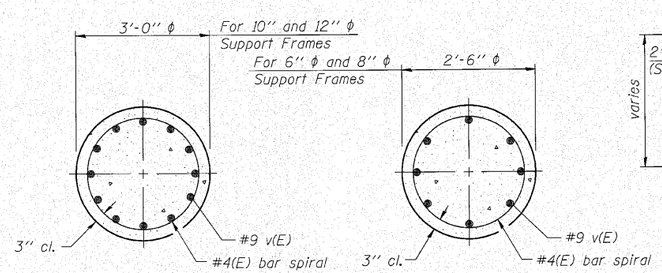

SECTION A-A

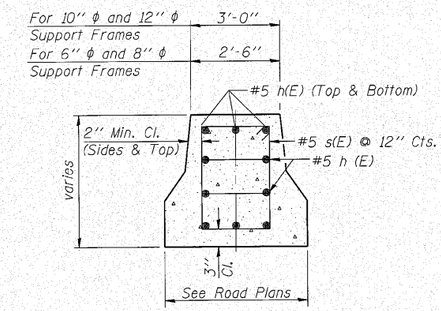

SECTION B-B

END VIEW

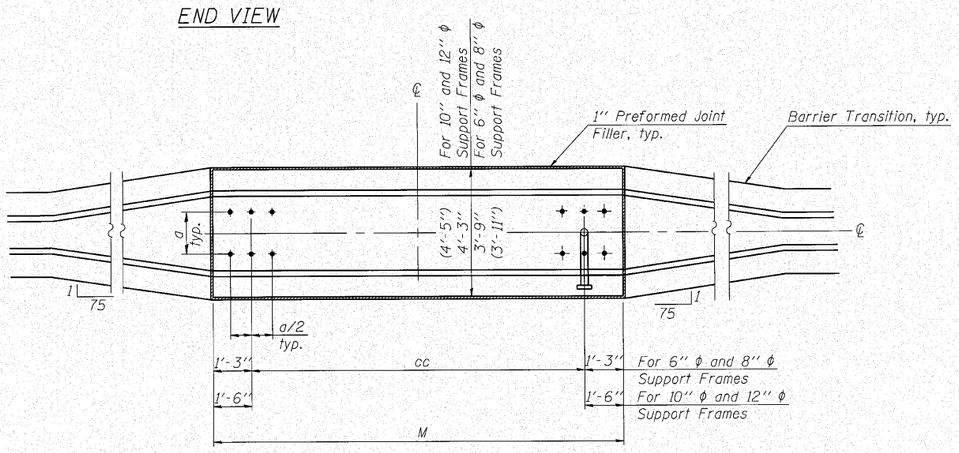

PLAN

Structure Number	Station	Left Foundation				Right Foundation				Class DS Concrete (Cu. Yds.)
		Elevation Top	Elevation Bottom	B	F	Elevation Top	Elevation Bottom	B	F	
IS099I080RI39.5	795+35					683.47	657.84	20'-6"	25'-7 1/2"	18.8
IS099I080LI40.3	839+88					713.23	686.24	22'-0"	27'-0"	19.7

OS4-MED 7-1-10

FILE NAME =	USER NAME = mthomas	DESIGNED - AMK	REVISED -
Ciorba Group, Inc. CONSULTING ENGINEERS 5207 North Cumberland Avenue Suite 402 Chicago, Illinois 60656 Tel: 773.775.4005 Fax: 773.775.4315 Email chicago@ciorba.com		CHECKED - BWS	REVISED -
	PLOT SCALE =	DRAWN - SAT	REVISED -
	PLOT DATE = 10/27/2010	CHECKED - BWS	REVISED -

STATE OF ILLINOIS
DEPARTMENT OF TRANSPORTATION

OVERHEAD SIGN STRUCTURES
MEDIAN SUPPORT FOUNDATION DETAILS

SHEET NO. 7 OF 9 SHEETS

F.A.I. RTE.	SECTION	COUNTY	TOTAL SHEETS	SHEET NO.
80	99-5-Y	WILL	276	142
		CONTRACT NO. 60147		
	ILLINOIS	FED. AID PROJECT		

n:\proj\3384\2_west\design\structural\Overhead Sign Structure - Span\3384 1-80W 07 OS4-MED.dgn

For anchor rod size and placement, see Support Frame Detail Sheet.

** Anchor rod shall be ground or filed to bright metal at clamp and cable connection location.

*** A normal surface finish followed by a Bridge Seat Sealer application will be required on concrete surfaces above the lowest elevation 6'' below finished ground line. Cost included in Concrete Foundations.

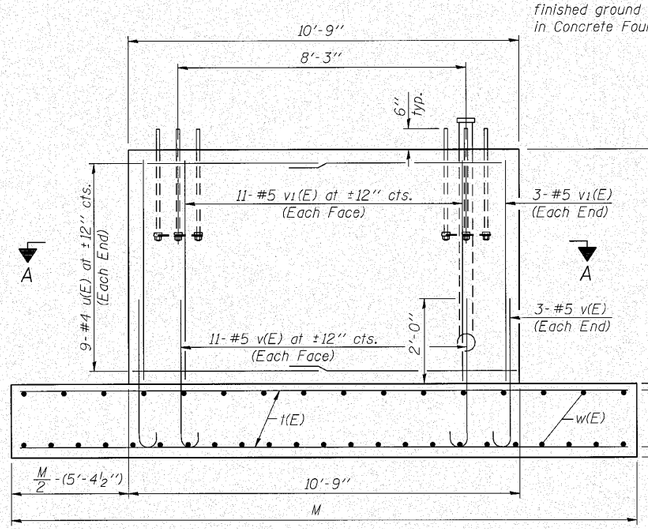

SIDE ELEVATION

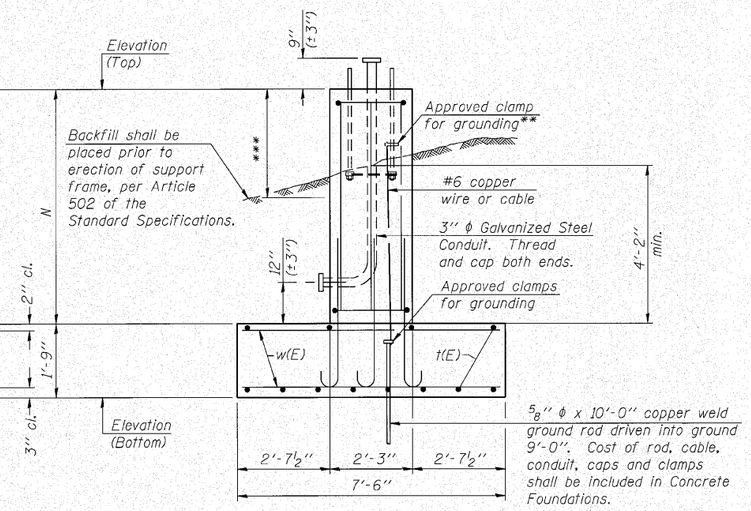

END ELEVATION

BAR v(E) BAR u(E)

BAR LIST - EACH FOUNDATION

Bar	Number	Size	Length	Shape
t(E)	12	#5	*	
u(E)	18	#4	14'-3''	
v(E)	28	#5	4'-1''	
v1(E)	28	#5	*	
w(E)	39	#5	7'-3''	

*Length of t(E) bar = (Dim. M) - 6''
v1(E) bar = (Dim. N) - 3''

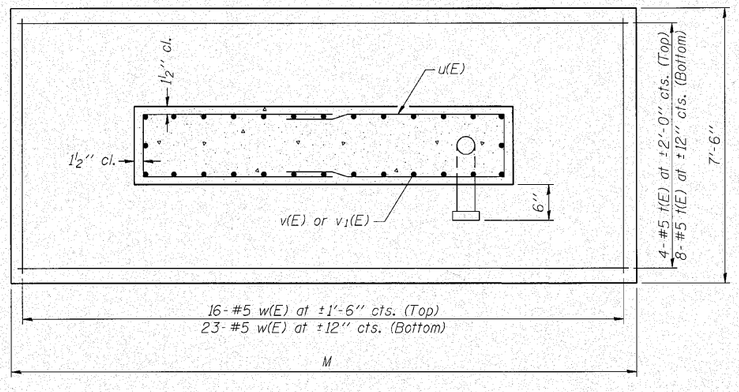

SECTION A-A

Structure Number	Station	Left Foundation				Right Foundation				Class SI Concrete (Cu. Yds.)
		Elevation Top	Elevation Bottom	N	M	Elevation Top	Elevation Bottom	N	M	
IS0991080R139.5	795+35					687.10	671.58	13'-9 1/4''	24'-6''	24.4

Note:
The foundation dimensions shown are based on the presence of mostly cohesive soils with an average Unconfined Compressive Strength (Qu) of at least 1.0 tsf, which must be determined by previous soil investigations at the jobsite. When other conditions are indicated, the boring data will be included in the plans and the foundation dimensions shown will be the result of site specific designs.
During construction, if footing length or width or wall height change by more than 12'', or if reinforcement is changed, ''as-built'' plans shall be prepared and submitted to the District Bureau of Operations for future reference.

DETAILS FOR 10'' ϕ SUPPORT FRAME

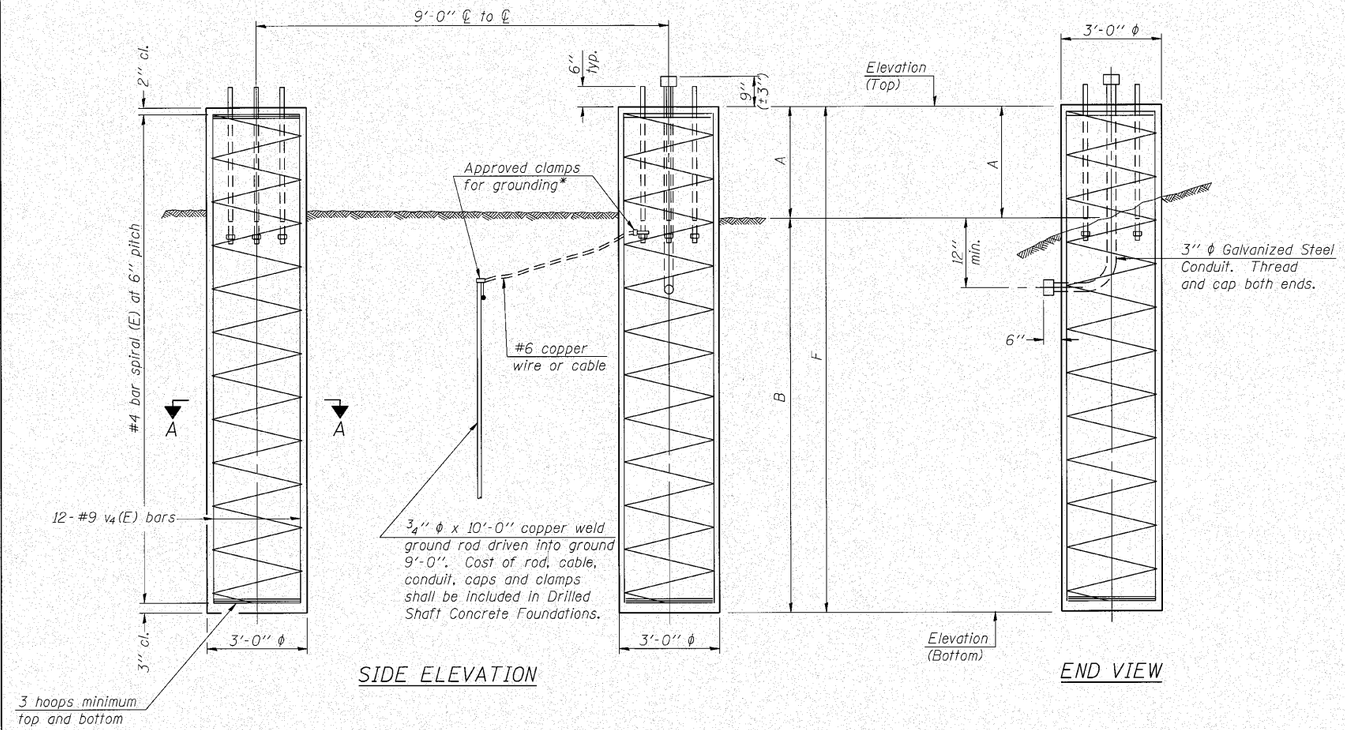

SIDE ELEVATION

END VIEW

BAR LIST - EACH FOUNDATION

Bar	Number	Size	Length	Shape
v4(E)	24	#9	F less 5"	———
#4 bar spiral (E) - see Side Elevation				

NOTES:

The foundation dimensions shown are based on the presence of mostly cohesive soils with an average Unconfined Compressive Strength (Qu) of at least 1.25 tsf, which must be determined by previous soil investigations at the jobsite. When other conditions are indicated, the boring data will be included in the plans and the foundation dimensions shown will be the result of site specific designs.

If the conditions encountered are different than those indicated, the Contractor shall notify the Engineer to determine if the foundation dimensions need to be modified. If dimensions "B" or "F" are revised by more than 12" by the Contractor, "as-built" plans shall be prepared and submitted to the District Bureau of Operations for future reference.

No sonotubes or decomposable forms shall be used below the lower conduit entrance.

Permanent metal forms or other shielding may not be left in place below that elevation without the Engineer's written permission.

Concrete shall be placed monolithically, without construction joints.

Backfill shall be placed per Article 502 of Standard Specification and prior to erection of support column.

A normal surface finish followed by a Bridge Seat Sealer application will be required on concrete surfaces above the lowest elevation 6" below finished ground line. Cost included in Drilled Shaft Concrete Foundation.

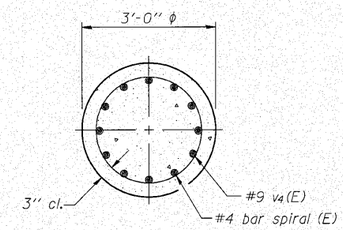

SECTION A-A

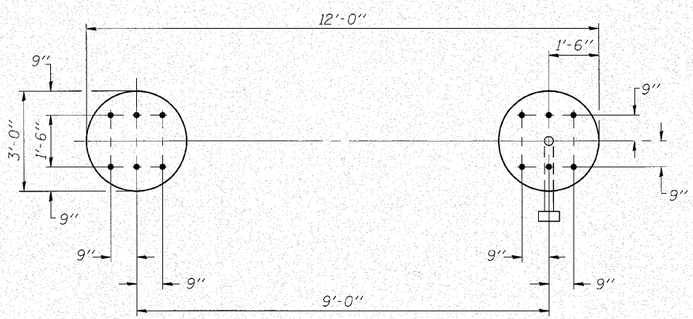

PLAN

For anchor rod size and placement, see Support Frame Detail Sheet.

* Anchor rod shall be ground or filed to bright metal at clamp and cable connection location.

DETAILS FOR 12" ϕ SUPPORT FRAME TYPE III-A TRUSS

Structure Number	Station	Left Foundation					Right Foundation					Class DS Concrete (Cu. Yds.)
		Elevation Top	Elevation Bottom	A	B	F	Elevation Top	Elevation Bottom	A	B	F	
IS099108OL140.3	839+88	710.07	681.57	6'-6"	22'-0"	28'-6"						15.0

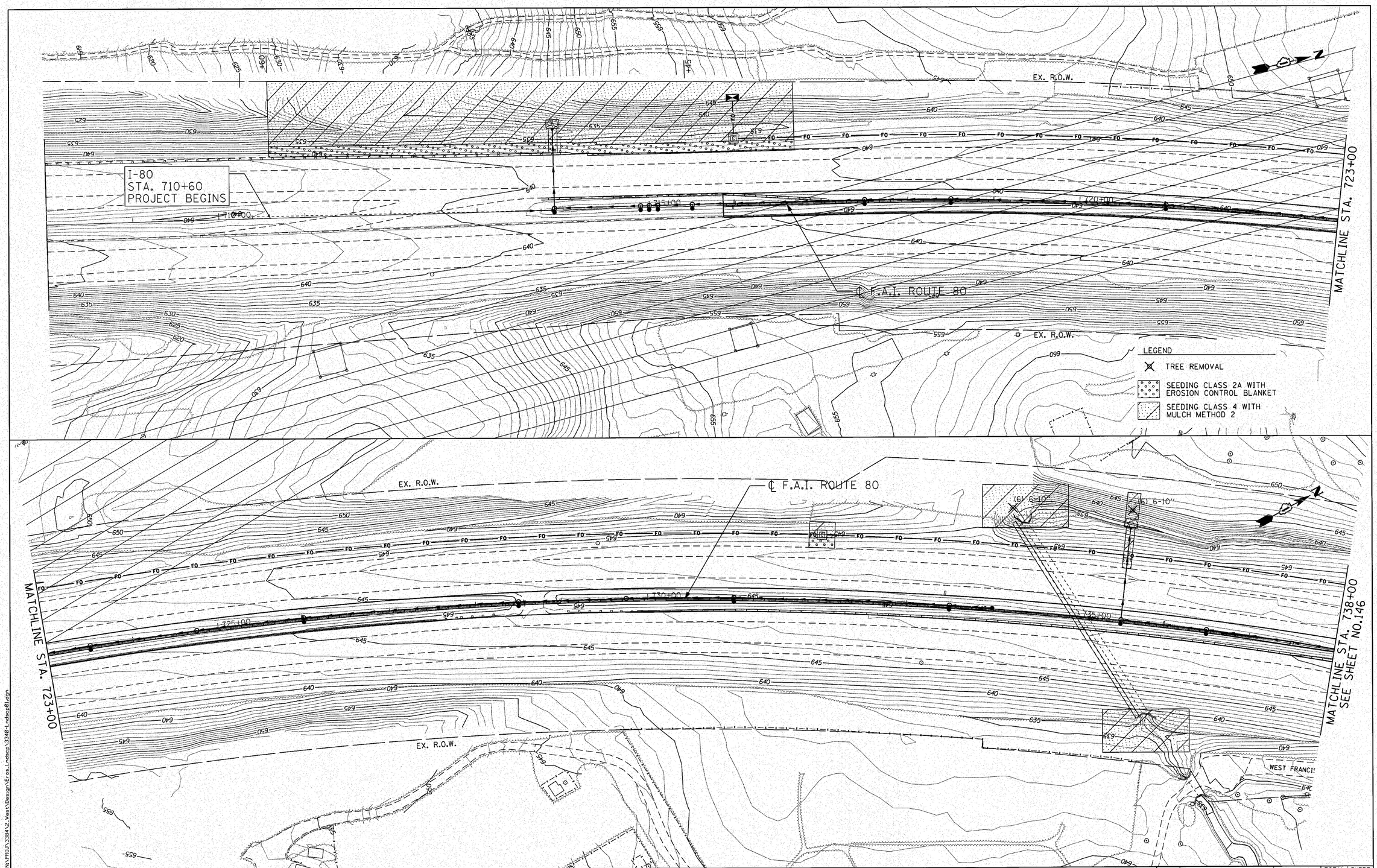

N:\PROJ\3384\2_West\Design\Eros_Landscp\3340-Landscp01.dgn

ENGINEERING CONSULTANT	USER NAME = dmorris	DESIGNED - CRC	REVISED -	STATE OF ILLINOIS DEPARTMENT OF TRANSPORTATION	F.A.I. 80 FROM US 30 TO NS RAILROAD LANDSCAPING PLAN	F.A.I. RTE.	SECTION	COUNTY	TOTAL SHEETS	SHEET NO.
Ciorba Group, Inc. CONSULTING ENGINEERS 6507 North Cumberland Avenue, Suite 402 Chicago, Illinois 60631 Tel 773.775.4008 Fax 773.775.4014 Email chicago@ciorba.com		DRAWN - JMK	REVISED -			80	99-5-Y	WILL	276	145
	PLOT SCALE = 50.0000 ' / IN.	CHECKED - MRJ	REVISED -					CONTRACT NO. 60147		
	PLOT DATE = 12/6/2010	DATE - 10/27/2010	REVISED -		SCALE: 1" = 50' SHEET NO. OF SHEETS STA. 710+60 TO STA. 738+00			ILLINOIS FED. AID PROJECT		

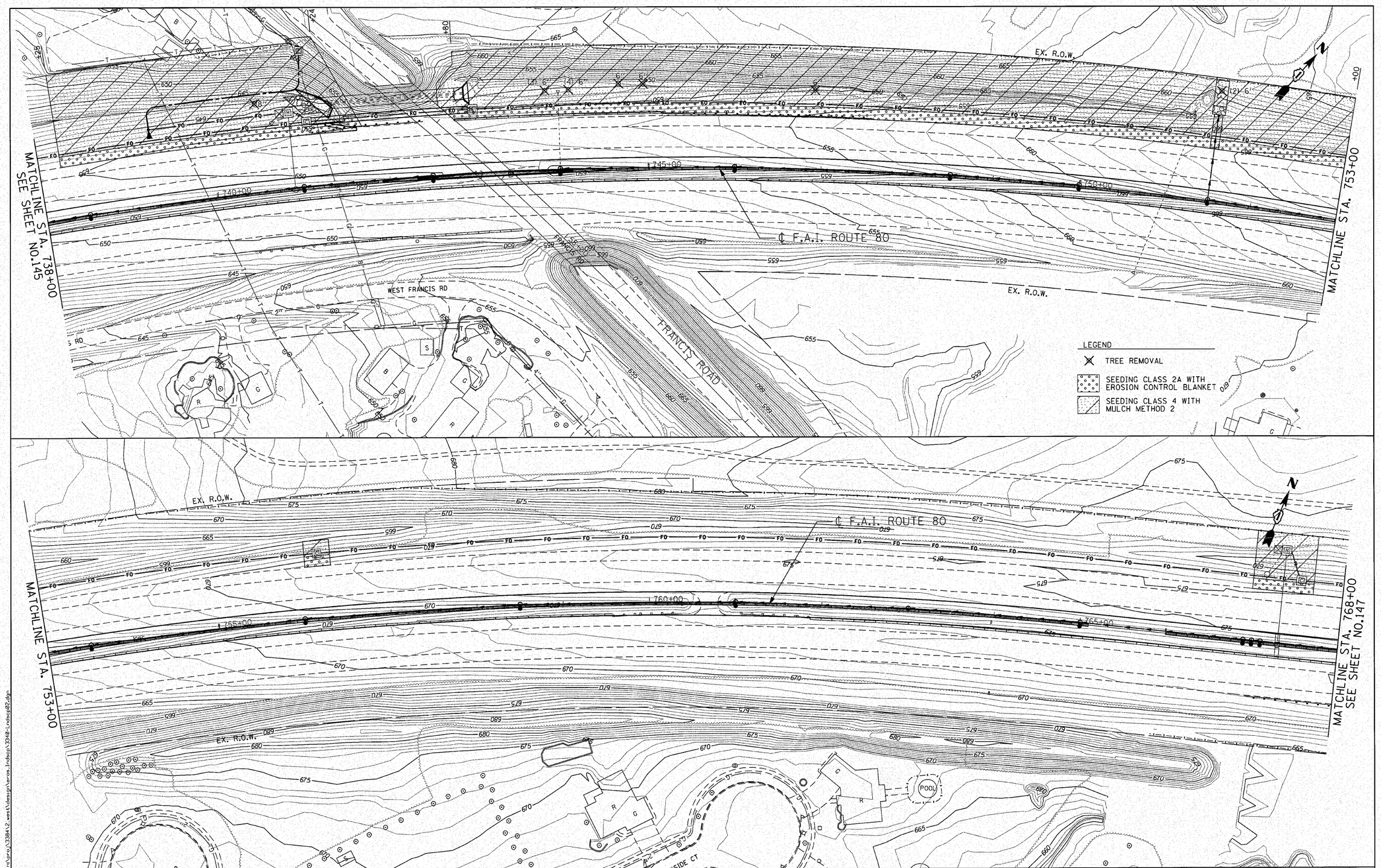

ENGINEERING CONSULTANT	USER NAME = dmorris	DESIGNED - CRC	REVISED -	STATE OF ILLINOIS DEPARTMENT OF TRANSPORTATION	F.A.I. 80 FROM US 30 TO NS RAILROAD LANDSCAPING PLAN	F.A.I. RTE.	SECTION	COUNTY	TOTAL SHEETS	SHEET NO.
Clorba Group, Inc. CONSULTING ENGINEERS 5507 North Cumberland Avenue, Suite 402 Chicago, Illinois 60656 Tel: 773.775.4008 Fax 773.775.4014 E-mail: chicago@clorba.com		DRAWN - JMK	REVISED -			80	99-5-Y	WILL	276	146
	PLOT SCALE = 50.0000 ' / IN.	CHECKED - MRJ	REVISED -					CONTRACT NO. 60I47		
	PLOT DATE = 12/6/2010	DATE - 10/27/2010	REVISED -		SCALE: 1" = 50' SHEET NO. 146 OF SHEETS STA. 738+00 TO STA. 768+00			ILLINOIS FED. AID PROJECT		

n:\proj\13841\2_west\design\across_lndscp\3348-lndscp82.dgn

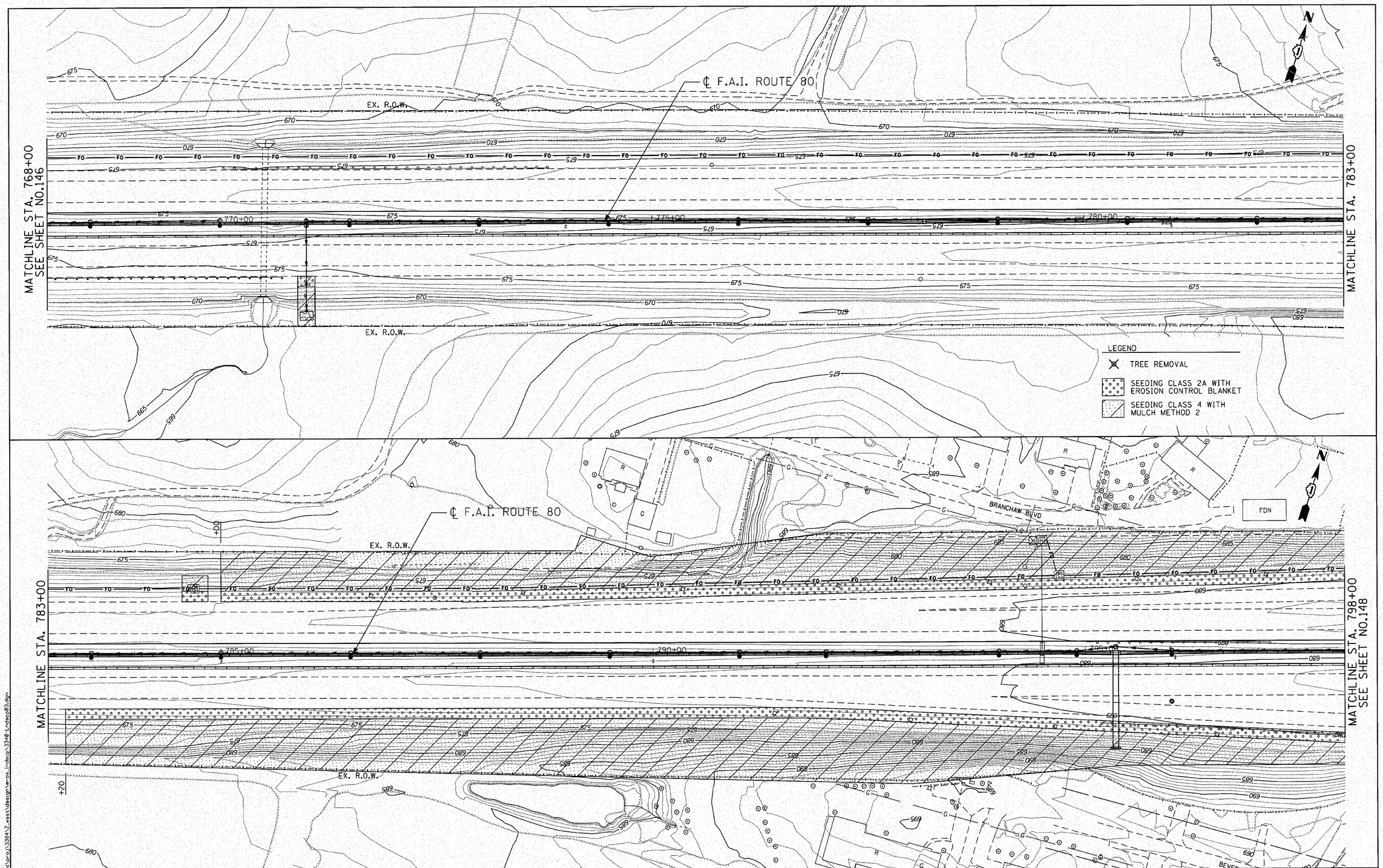

ENGINEERING CONSULTANT			
Ciorba Group, Inc. CONSULTING ENGINEERS 5507 North Cumberland Avenue, Suite 402 Chicago, Illinois 60656 Tel: 773.775.4009 Fax: 773.775.4014 Email: chicago@ciorba.com	USER NAME = dmorris	DESIGNED - CRC	REVISED -
		DRAWN - JMK	REVISED -
	PLOT SCALE = 50.0000 ' / IN.	CHECKED - MRJ	REVISED -
	PLOT DATE = 12/6/2010	DATE - 10/27/2010	REVISED -

STATE OF ILLINOIS
DEPARTMENT OF TRANSPORTATION

F.A.I. 80 FROM US 30 TO NS RAILROAD
LANDSCAPING PLAN

SCALE: 1" = 50' | SHEET NO. 147 OF SHEETS | STA. 768+00 TO STA. 798+00

F.A.I. RTE.	SECTION	COUNTY	TOTAL SHEETS	SHEET NO.
80	99-5-Y	WILL	276	147
		CONTRACT NO. 60147		
		ILLINOIS FED. AID PROJECT		

n:\proj\33842_west\design\ecos_lndscp\3340_lndscp83.dgn

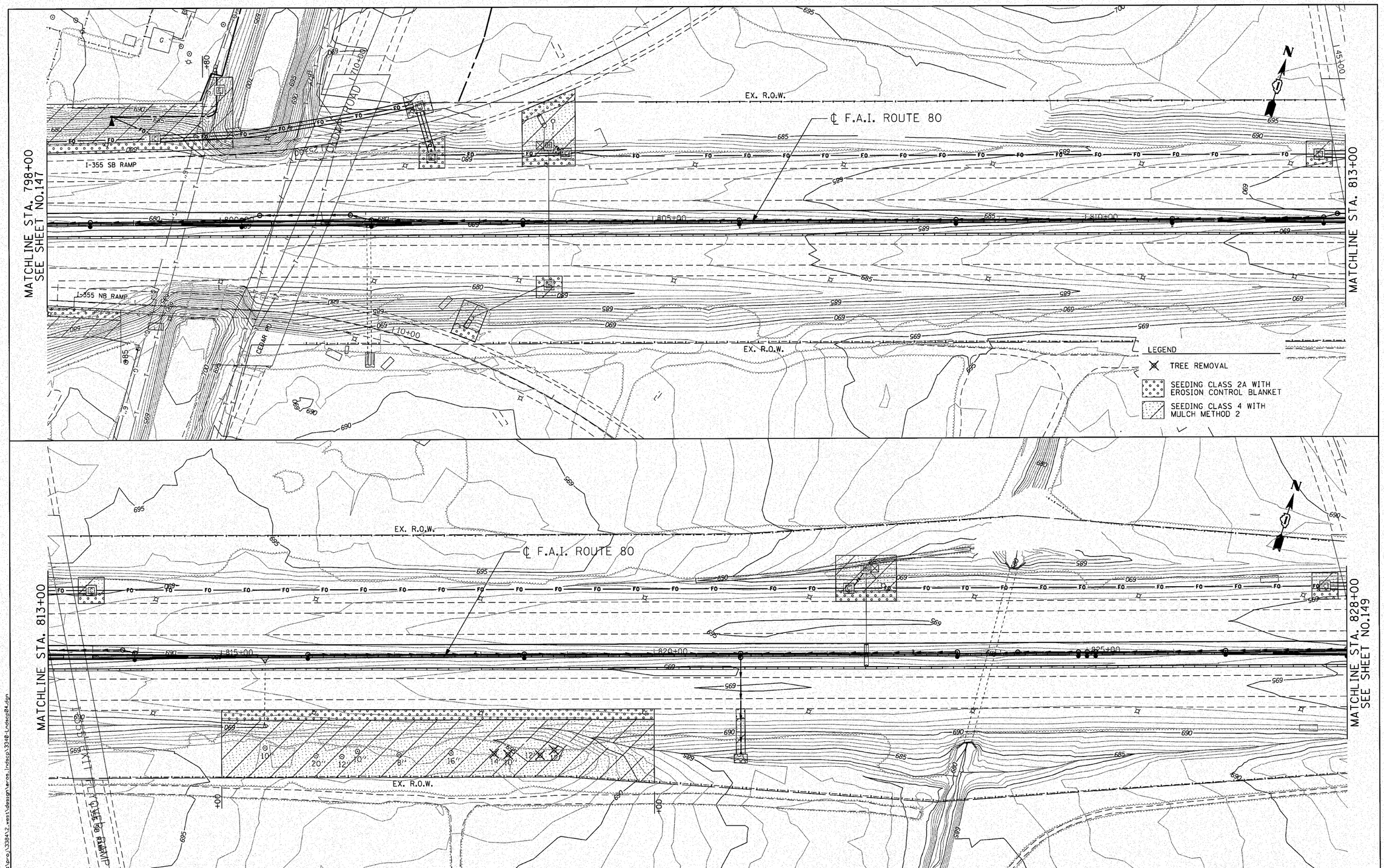

ENGINEERING CONSULTANT							
Ciorba Group, Inc. CONSULTING ENGINEERS 5507 North Cumberland Avenue, Suite 402 Chicago, Illinois 60656 Tel: 773.775.4009 Fax: 773.775.4014 E-mail: chicago@ciorba.com	USER NAME = dmorris	DESIGNED - CRC	REVISED -	STATE OF ILLINOIS DEPARTMENT OF TRANSPORTATION	F.A.I. 80 FROM US 30 TO NS RAILROAD LANDSCAPING PLAN	F.A.I. RTE. 80	SECTION 99-5-Y
		DRAWN - JMK	REVISED -			COUNTY WILL	TOTAL SHEETS 276 / SHEET NO. 148
	PLOT SCALE = 0.5000 ' / IN.	CHECKED - MRJ	REVISED -			CONTRACT NO. 60147	
	PLOT DATE = 12/6/2010	DATE - 10/27/2010	REVISED -		SCALE: 1" = 50' SHEET NO. OF SHEETS STA. 798+00 TO STA. 828+00	ILLINOIS FED. AID PROJECT	

n:\proj\3384\2_west\design\eros_indscp\3348_indscp84.dgn

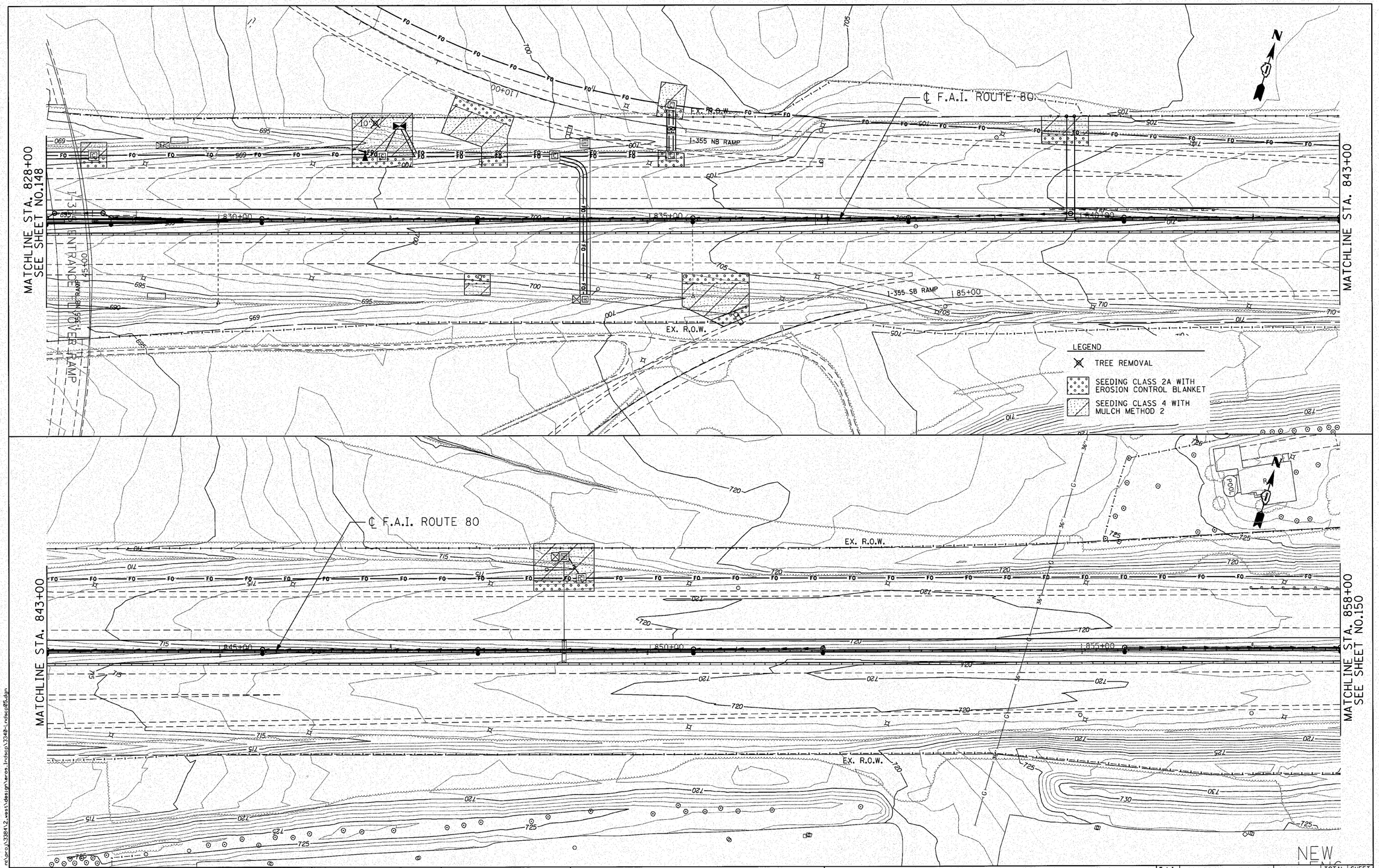

ENGINEERING CONSULTANT	USER NAME = dmorris	DESIGNED - CRC	REVISED -
Clorba Group, Inc. CONSULTING ENGINEERS 5507 North Cumberland Avenue, Suite 402 Chicago, Illinois 60656 Tel. 773.775.0008 Fax 773.775.4014 Email clorba@clorba.com		DRAWN - JMK	REVISED -
	PLOT SCALE = 50.0000 ' / IN.	CHECKED - MRJ	REVISED -
	PLOT DATE = 12/6/2010	DATE - 10/27/2010	REVISED -

STATE OF ILLINOIS
DEPARTMENT OF TRANSPORTATION

F.A.I. 80 FROM US 30 TO NS RAILROAD
LANDSCAPING PLAN

SCALE: 1" = 50' | SHEET NO. OF SHEETS | STA. 828+00 TO STA. 858+00

F.A.I. RTE.	SECTION	COUNTY	TOTAL SHEETS	SHEET NO.
80	99-5-Y	WILL	276	149
		CONTRACT NO. 60147		
		ILLINOIS FED. AID PROJECT		

n:\proj\3384\2_west\design\eros_lndscp\3149-lndscp05.dgn

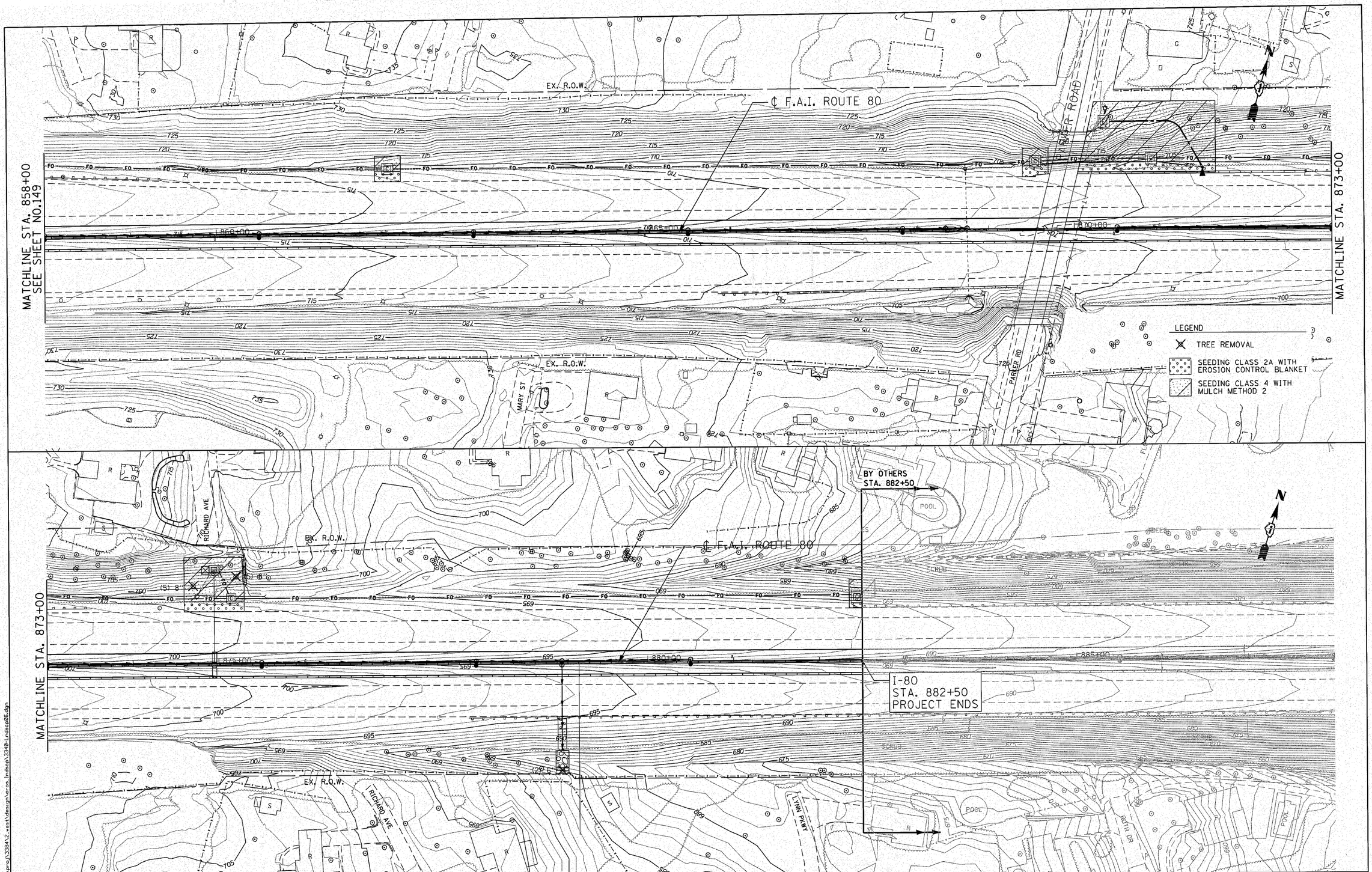

n:\proj\3384\2_east\design\eros_landscp\3348_landscp05.dgn

ENGINEERING CONSULTANT	USER NAME = dmorris	DESIGNED - CRC	REVISED -
Clorba Group, Inc. CONSULTING ENGINEERS 5507 North Cumberland Avenue, Suite 402 Chicago, Illinois 60656 Tel: 773.775.4009 Fax: 773.775.4014 Email: chicago@clorba.com		DRAWN - JMK	REVISED -
	PLOT SCALE = 0.5000 ' / IN.	CHECKED - MRJ	REVISED -
	PLOT DATE = 12/6/2010	DATE - 10/27/2010	REVISED -

STATE OF ILLINOIS
DEPARTMENT OF TRANSPORTATION

F.A.I. 80 FROM US 30 TO NS RAILROAD
LANDSCAPING PLAN

SCALE: 1" = 50' | SHEET NO. OF SHEETS | STA. 858+00 TO STA. 882+50

F.A.I. RTE.	SECTION	COUNTY	TOTAL SHEETS	SHEET NO.
80	99-5-Y	WILL	276	150
		CONTRACT NO. 60147		
		ILLINOIS FED. AID PROJECT		

CALENDAR OF LANDSCAPE CONSTRUCTION AND ESTABLISHMENT WORK

Item	2011 March	April	May	June	July	August	September	October	November	December
Vegetation Management - Woody Plant Material										
Tree Pruning: October 15 - April 15										
Selective Clearing: October 15 to April 15										
Tree Removal										
Vegetation Management - Herbaceous Weeds										
Mowing Cycle (for mowing strip along shoulder)										
Mowing and Mowing (Special)										
Weed Control, Broadleaf in Turf										
Weed Control, Teasel										
Seeding										
Seeding, Class 2A Spring: March 15 - June 1 Fall: Aug 1 - Oct 15 Dormant : Nov 15 - March 15										
Seeding, Class 4 (Modified) Spring: May 15 - June 30 Fall: Oct 15 - Nov 15 Dormant : Nov 15 - March 15										
Mowing: Mow area to be interseeded to a maximum height of 3" (INCIDENTAL)										
Weed Control, Non-Selective, Non-Residual: Spray area to be interseeded										
Interseeding, Class 4 (Modified) Woodland Mix Dormant: Nov 1 - Dec 15										

rs\proj\33844\2_west\design\ros_lndscp\33844-Lndscp07.dgn

I.T.S. GENERAL NOTES

1.) THE CONTRACTOR SHALL VERIFY THE LOCATIONS OF CABINETS AND FIBER OPTIC CABLE PRIOR TO BIDDING THE JOB. GPS LOCATIONS HAVE BEEN ADDED TO THE PLANS TO ASSIST IN FINDING THE CABINET LOCATIONS. STATIONING PROVIDED ON THE PLANS TAKE PRECEDENCE.

2.) LOCATIONS OF THE CCTV CAMERA INSTALLATIONS ARE APPROXIMATE. THE CONTRACTOR MAY ADJUST THE LOCATIONS OF THE INSTALLATIONS TO FACILITATE INSTALLATION WITH WRITTEN APPROVAL OF THE RESIDENT ENGINEER AND THE ELECTRICAL DESIGN SECTION. ALL STANDARD NON-FRANGIBLE SETBACK REQUIREMENTS AS WELL AS CLEAR ZONE REQUIREMENTS SHALL BE MAINTAINED.

3.) A MAINLINE SPLICE SHALL NOT BE IN THE SAME COMMUNICATION VAULT AS A LATERAL SPLICE. MAINLINE SPLICES SHALL UTILIZE 2 COMMUNICATION VAULTS (ONE NEXT TO THE OTHER UNLESS OTHERWISE NOTED). 1-96 SM FIBER MAINLINE SPLICE IN ONE VAULT AND THE OTHER 96 SM FIBER MAINLINE SPLICE IN THE OTHER VAULT.

4.) THE CONTRACTOR SHALL EXERCISE CARE WITH THE INSTALLATION OF UNDERGROUND EQUIPMENT AS THERE MAY BE EXISTING PRIVATELY OWNED FACILITIES WITHIN THE PROJECT LIMITS. IT SHALL BE THE CONTRACTOR'S RESPONSIBILITY TO CONTACT ANY UTILITIES IN THE WORK ZONE AND REQUEST UTILITY LOCATES.

5.) THE CONTRACTOR SHALL BE AWARE OF THE DOCUMENTATION REQUIREMENTS WHICH REQUIRE GPS DATA ACQUISITION INCLUDED IN THE RECORD DRAWINGS.

6.) FIBER OPTIC CABLE SLACK SHALL BE AS FOLLOWS: 150 FEET FOR EACH CABLE (96 AND 12 FIBER) AT HANDHOLES AND COMMUNICATIONS VAULTS WHERE SPLICING IS INDICATED. FIBER OPTIC CABLE SLACK SHALL BE 100 FEET FOR EACH CABLE AT HANDHOLES AND JUNCTION BOXES WHERE NO SPLICING IS INVOLVED; UNLESS OTHERWISE INDICATED.

7.) THE ELECTRICAL MAINTENANCE CONTRACTOR (EMC) SHALL BE CONTACTED FOR EXISTING STATE OWNED FACILITIES LOCATES.

8.) RECORD DRAWINGS OF THE EXISTING LIGHTING INSTALLATIONS (FOR POWER) ARE AVAILABLE FOR REVIEW AT THE DISTRICT ELECTRICAL DESIGN SECTION OFFICE WITH 48 HOUR ADVANCE NOTICE.

9.) ALL UNDERGROUND RACEWAYS SHALL BE INSTALLED AT A MINIMUM DEPTH OF 30-INCHES.

10.) THE CONTRACTOR SHALL VERIFY ADEQUATE CLEARANCE OVER EXISTING FACILITIES BEFORE INSTALLING DUCTS, CONDUIT AND CABLES.

11.) WHERE ELECTRIC POWER IS INDICATED FROM AN EXISTING CONTROLLER, THE CONTRACTOR SHALL EXPEDITIOUSLY INSTALL THE REQUIRED CIRCUIT BREAKER(S) AND UNDERGROUND WORK. MAINTENANCE OF THE CONTROLLER SHALL BE ASSUMED BY THE CONTRACTOR DURING THE MODIFICATION OF THE CONTROLLER.

12.) WHERE A CCTV CABINET IS CONNECTED TO A TYPE 3 CABINET, A SECOND ETHERNET SWITCH SHALL BE INSTALLED.

LEGEND:

- [J] JUNCTION BOX, SIZE AS NOTED
- [C] COMMUNICATION VAULT
- [H] HEAVY DUTY HAND HOLE
- TYPE 3 CABINET
- GALVANIZED RIGID STEEL CONDUIT, INSTALLATION, TYPE AND SIZE AS NOTED
- ELECTRIC SERVICE CONNECTION
- 2 RADAR VEHICLE SENSING DEVICES
- 1 RADAR VEHICLE SENSING DEVICE
- CCTV CAMERA AND EQUIPMENT CABINET MOUNTED ON 50' POLE
- LIGHTING CABINET
- (E) EXISTING
- (I) INSTALL
- (P) PUSHED
- (T) TRENCHED
- FIBER OPTIC INTER CONNECT CABINET
- [E] ELECTRIC SERVICE INSTALLATION-GROUND MOUNTED

ABBREVIATIONS

PREFIX	COMPONENT
ADF	ADD/DROP, FIBER OPTIC (CWDM OR OTHER)
CAX	COAX CABLE
CSC	CABLE SPLICE, COPPER
CSF	CABLE SPLICE, FIBER OPTIC
CTD	CCTV CAMERA, DOME
CTF	CCTV CAMERA, FIXED POSITION
CBT	CHANNEL BANK, T1
CCC	CONTROL CABLE, COPPER
CVB	CONTROLLER, VIDEO, BACKUP
CVP	CONTROLLER, VIDEO, PRIMARY
DAV	DISTRIBUTION AMPLIFIER, VIDEO
DCC	DISTRIBUTION CABLE, COPPER
DCF	DISTRIBUTION CABLE, FIBER OPTIC
DEC	DECODER (CODEC MPEG2)
DMS	DYNAMIC MESSAGE SIGN
VRD	VIDEO RECORDER, DIGITAL
ENC	ENCODER (CODEC MPEG2)
ETH	ETHERNET CABLE
HHL	HANDHOLE
JBC	JUNCTION BOX, CONTROL (COPPER)
JBF	JUNCTION BOX, FIBER OPTIC CABLE
JBP	JUNCTION BOX, POWER
KBD	KEYBOARD
LDI	LOOP DETECTOR, INDUCTION
LDM	LOOP DETECTOR, MICROLOOP
MDF	MUX/DEMUX, FIBER (CWDM)
MON	MONITOR, COMPUTER
MVD	MONITOR, VIDEO
MVR	MONITOR, VIDEO, FLAT PANEL RACK (LCD RACK)
MXS	MULTIPLEXER, SONET
PCE	PATCH CABLE, ETHERNET
PCF	PATCH CABLE, FIBER

PREFIX	COMPONENT
PLP	PULLING PEDESTAL
PPC	PATCH PANEL, COPPER
PPE	PATCH PANEL, ETHERNET
PPF	PATCH PANEL, FIBER
PPV	PATCH PANEL, VIDEO
RMC	RADIO, MICROWAVE, CONTROL (UNLICENSED)
RMV	RADIO, MICROWAVE, VIDEO (UNLICENSE)
RXF	RECEIVER, FIBER OPTIC
RXT	RECEIVER, FSK TONE
SCF	SPLITTER/COMBINER, FIBER OPTIC (CWDM)
SPV	SIGNAL SPLITTER, VIDEO
SSV	SELECTOR SWITCH, VIDEO (MANUAL)
SWE	SWITCH, ETHERNET
SWV	SWITCH, VIDEO
TCC	TRUNK CABLE, COPPER
TCF	TRUNK CABLE, FIBER OPTIC
TLC	TLC WATCH EQUIPMENT
TXF	TRANSMITTER, FIBER OPTIC
TXT	TRANSMITTER, FSK TONE
VCD	VIDEO CAPTURE DEVICE
VCL	VIDEO CONTROL LOCATION
VCP	VIDEO COLLECTION POINT
WST	USER WORK STATIION

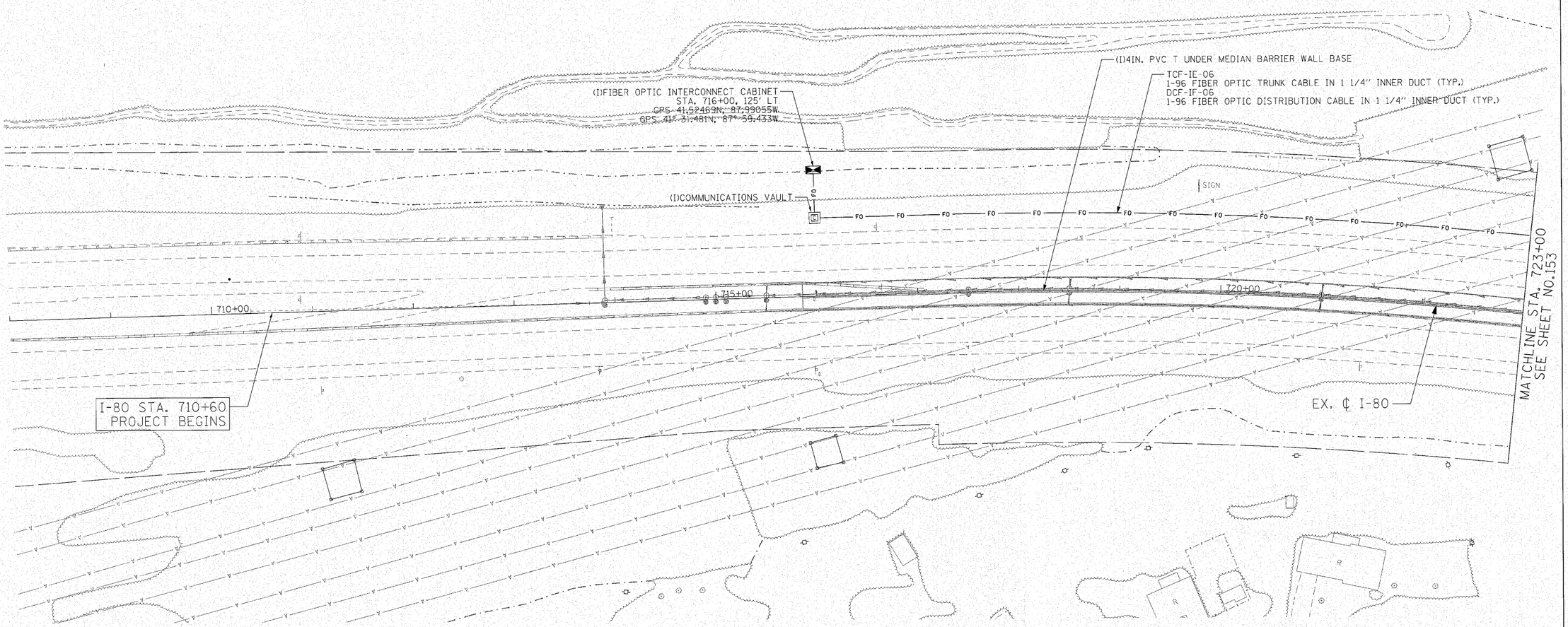

n:\proj\3384\2_west\design\ITS\3384-sur01.dgn

ENGINEERING CONSULTANT	USER NAME = ccornwell	DESIGNED - JG & RT	REVISED -
Ciorba Group, Inc. CONSULTING ENGINEERS 5507 North Cumberland Avenue, Suite 402 Chicago, Illinois 60656 Tel: 773.775.4009 Fax 773.775.4014 Email chicago@ciorba.com		DRAWN - RJR	REVISED -
	PLOT SCALE = 50.0000 ' / IN.	CHECKED - JMV	REVISED -
	PLOT DATE = 10/27/2010	DATE - 10/27/2010	REVISED -

STATE OF ILLINOIS
DEPARTMENT OF TRANSPORTATION

F.A.I. 80 FROM US 30 TO NS RAILROAD
I.T.S. PLANS
1/2 MILE WEST OF FRANCIS ROAD

SCALE: 1" = 50' | SHEET NO.152 OF 277 SHEETS | STA. 710+60 TO STA. 723+00

F.A.I. RTE.	SECTION	COUNTY	TOTAL SHEETS	SHEET NO.
80	99-5-Y	WILL	277	152
		CONTRACT NO. 60147		
	ILLINOIS FED. AID PROJECT			

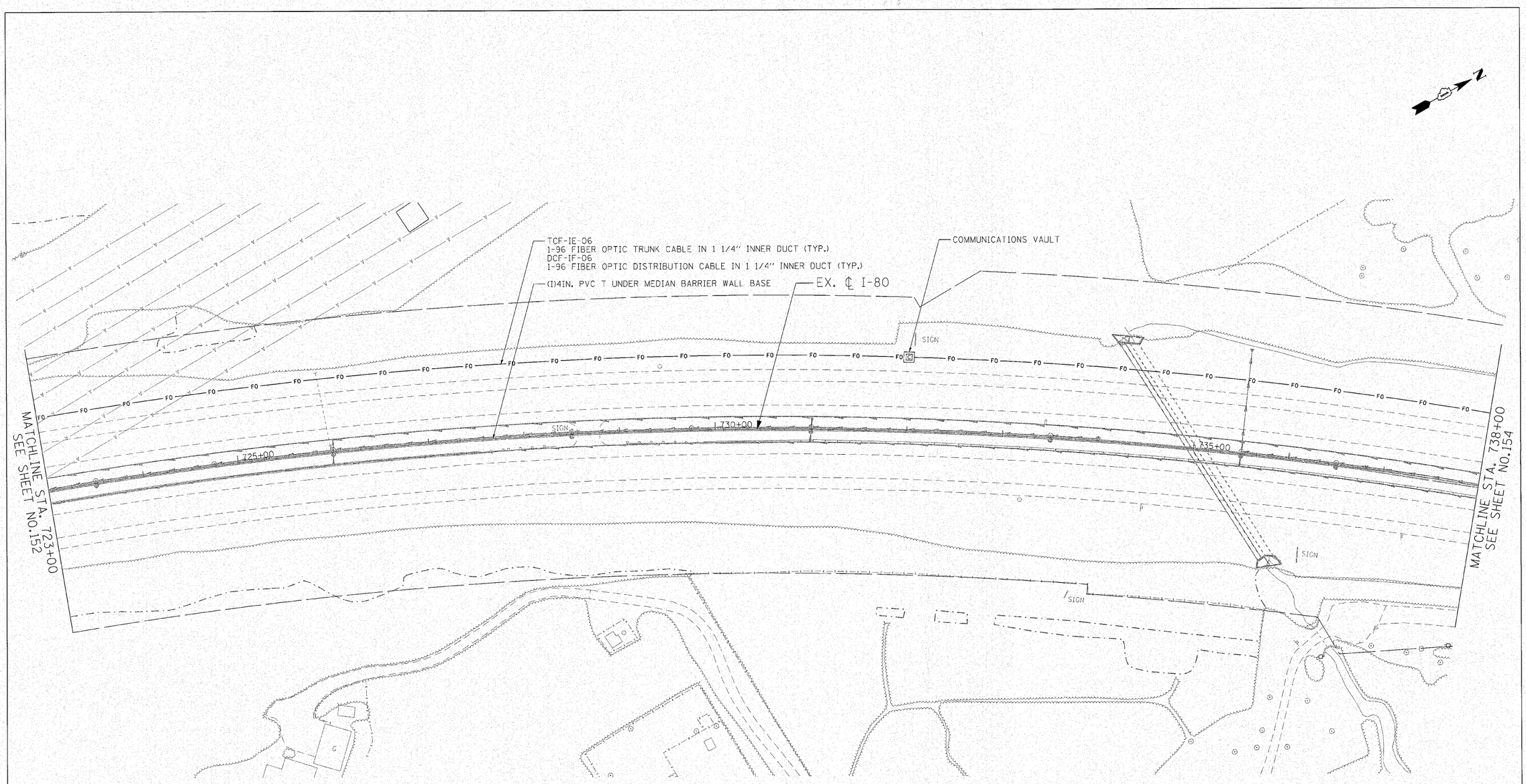

ENGINEERING CONSULTANT	USER NAME = ccornwell	DESIGNED - JG & RT	REVISED -	STATE OF ILLINOIS DEPARTMENT OF TRANSPORTATION	F.A.I. 80 FROM US 30 TO NS RAILROAD I.T.S. PLANS	F.A.I. RTE.	SECTION	COUNTY	TOTAL SHEETS	SHEET NO.
Ciorba Group, Inc. CONSULTING ENGINEERS 5007 North Cumberland Avenue, Suite 402 Chicago, Illinois 60656 Tel: 773.775.4009 Fax 773.775.4014 Email chicago@ciorba.com		DRAWN - RJR	REVISED -			80	99-5-Y	WILL	277	153
	PLOT SCALE = 50.0000 ' / IN.	CHECKED - JMV	REVISED -					CONTRACT NO. 60147		
	PLOT DATE = 10/27/2010	DATE - 10/27/2010	REVISED -		SCALE: 1" = 50' SHEET NO.153 OF 277 SHEETS STA. 723+00 TO STA. 738+00			ILLINOIS FED. AID PROJECT		

r:\ciorba\3384\2_west\design\ITS\3384-sur-02.dgn

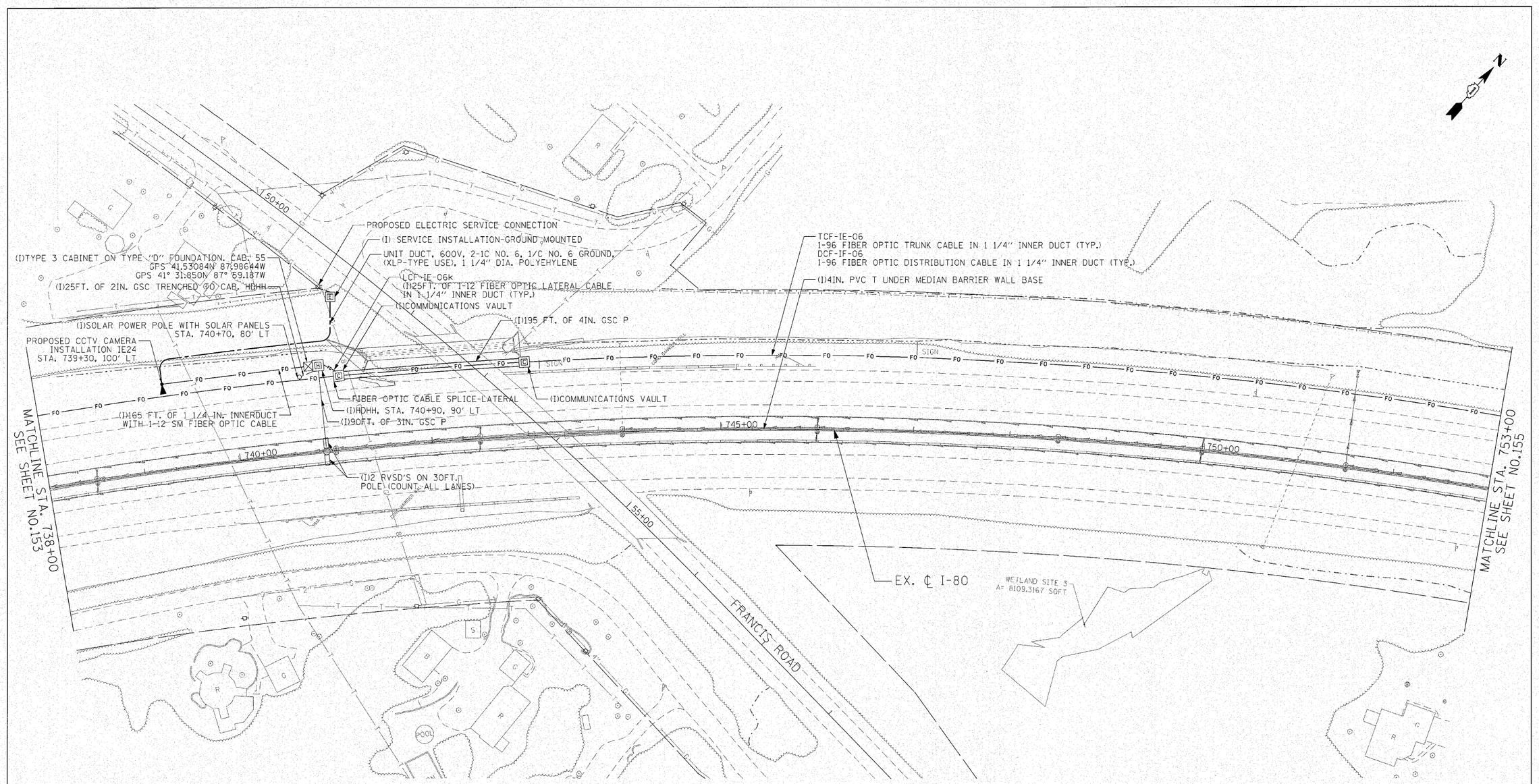

ENGINEERING CONSULTANT					
Ciorba Group, Inc. CONSULTING ENGINEERS 5007 North Cumberland Avenue, Suite 402 Chicago, Illinois 60656 Tel 773.775.4200 Fax 773.775.4014 Email chicago@ciorba.com	USER NAME = ccornwell	DESIGNED - JG & RT	REVISED -		
		DRAWN - RJR	REVISED -		
	PLOT SCALE = 50.0000 ' / IN.	CHECKED - JMV	REVISED -		
	PLOT DATE = 10/27/2010	DATE - 10/27/2010	REVISED -		

STATE OF ILLINOIS
DEPARTMENT OF TRANSPORTATION

F.A.I. 80 FROM US 30 TO NS RAILROAD
I.T.S. PLANS
FRANCIS ROAD

SCALE: 1" = 50' | SHEET NO.154 OF 277 SHEETS | STA. 738+00 TO STA. 753+00

F.A.I. RTE.	SECTION	COUNTY	TOTAL SHEETS	SHEET NO.
80	99-5-Y	WILL	277	154
		CONTRACT NO. 60I47		
	ILLINOIS FED. AID PROJECT			

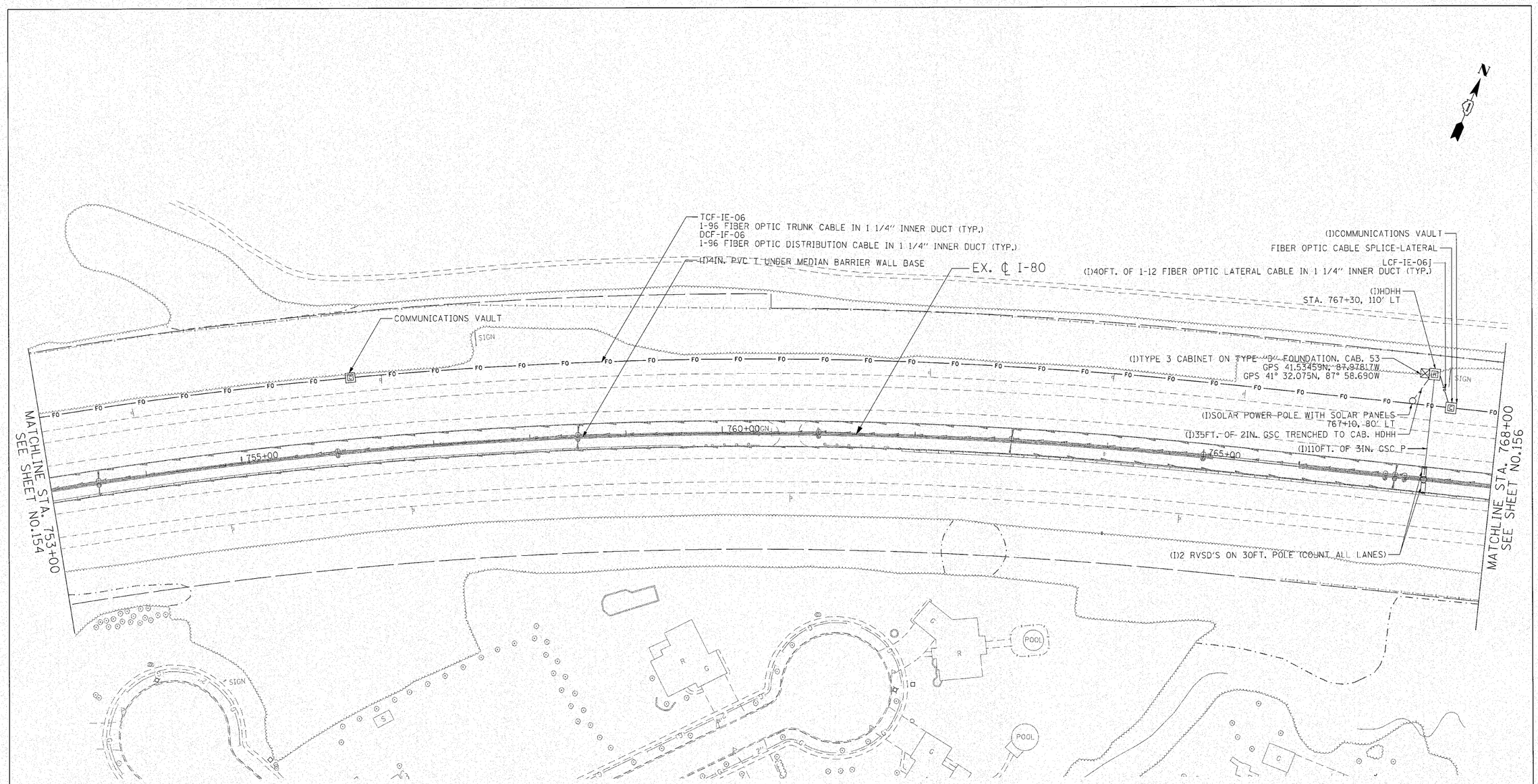

n:\proj\3384\2_west\design\ITS\3384-surv04.dgn

ENGINEERING CONSULTANT	USER NAME = ccornwell	DESIGNED - JG & RT	REVISED -	STATE OF ILLINOIS DEPARTMENT OF TRANSPORTATION	F.A.I. 80 FROM US 30 TO NS RAILROAD I.T.S. PLANS 1/2 MILE EAST OF FRANCIS ROAD	F.A.I. RTE.	SECTION	COUNTY	TOTAL SHEETS	SHEET NO.
Ciorba Group, Inc. CONSULTING ENGINEERS 5507 North Cumberland Avenue, Suite 402 Chicago, Illinois 60656 Tel. 773.775.4309 Fax 773.775.4014 Email chicago@ciorba.com		DRAWN - RJR	REVISED -			80	99-5-Y	WILL	277	155
	PLOT SCALE = 50.0000 ' / IN.	CHECKED - JMV	REVISED -					CONTRACT NO. 60147		
	PLOT DATE = 10/27/2010	DATE - 10/27/2010	REVISED -		SCALE: 1" = 50' SHEET NO.155 OF 277 SHEETS STA. 753+00 TO STA. 768+00		ILLINOIS FED. AID PROJECT			

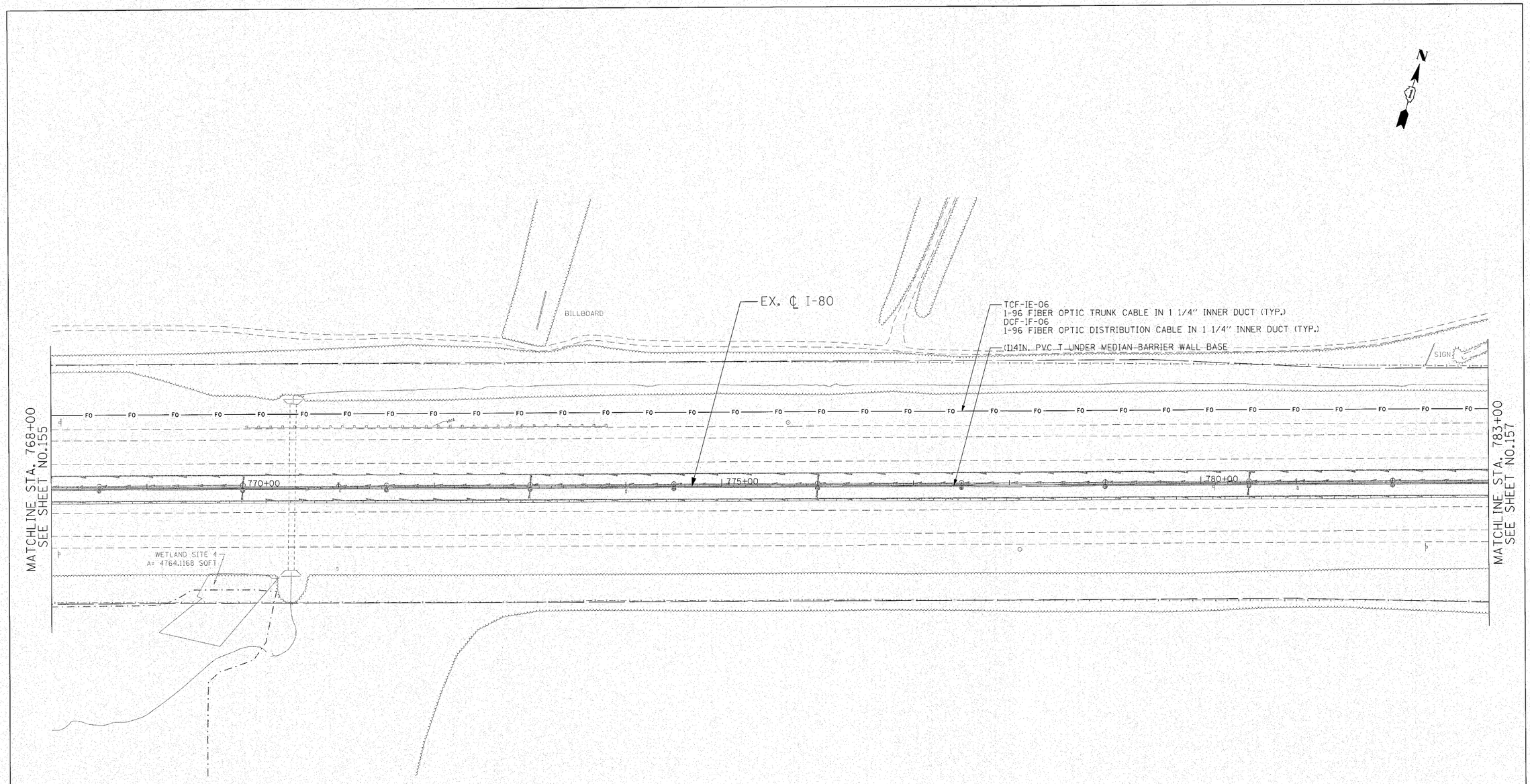

n:\proj\3384\2_west\design\ITS\3384-sur-005.dgn

ENGINEERING CONSULTANT Ciorba Group, Inc. CONSULTING ENGINEERS 5507 North Cumberland Avenue, Suite 402 Chicago, Illinois 60656 Tel: 773.772.4009 Fax 773.775.4614 Email: chicago@ciorba.com	USER NAME = ccornwell	DESIGNED - JG & RT	REVISED -	STATE OF ILLINOIS DEPARTMENT OF TRANSPORTATION	F.A.I. 80 FROM US 30 TO NS RAILROAD I.T.S. PLANS
		DRAWN - RJR	REVISED -		
	PLOT SCALE = 50.0000 ' / IN.	CHECKED - JMV	REVISED -		
	PLOT DATE = 10/27/2010	DATE - 10/27/2010	REVISED -		SCALE: 1" = 50' SHEET NO.156 OF 277 SHEETS STA. 768+00 TO STA. 783+00

F.A.I. RTE.	SECTION	COUNTY	TOTAL SHEETS	SHEET NO.
80	99-5-Y	WILL	277	156
		CONTRACT NO. 60147		
		ILLINOIS FED. AID PROJECT		

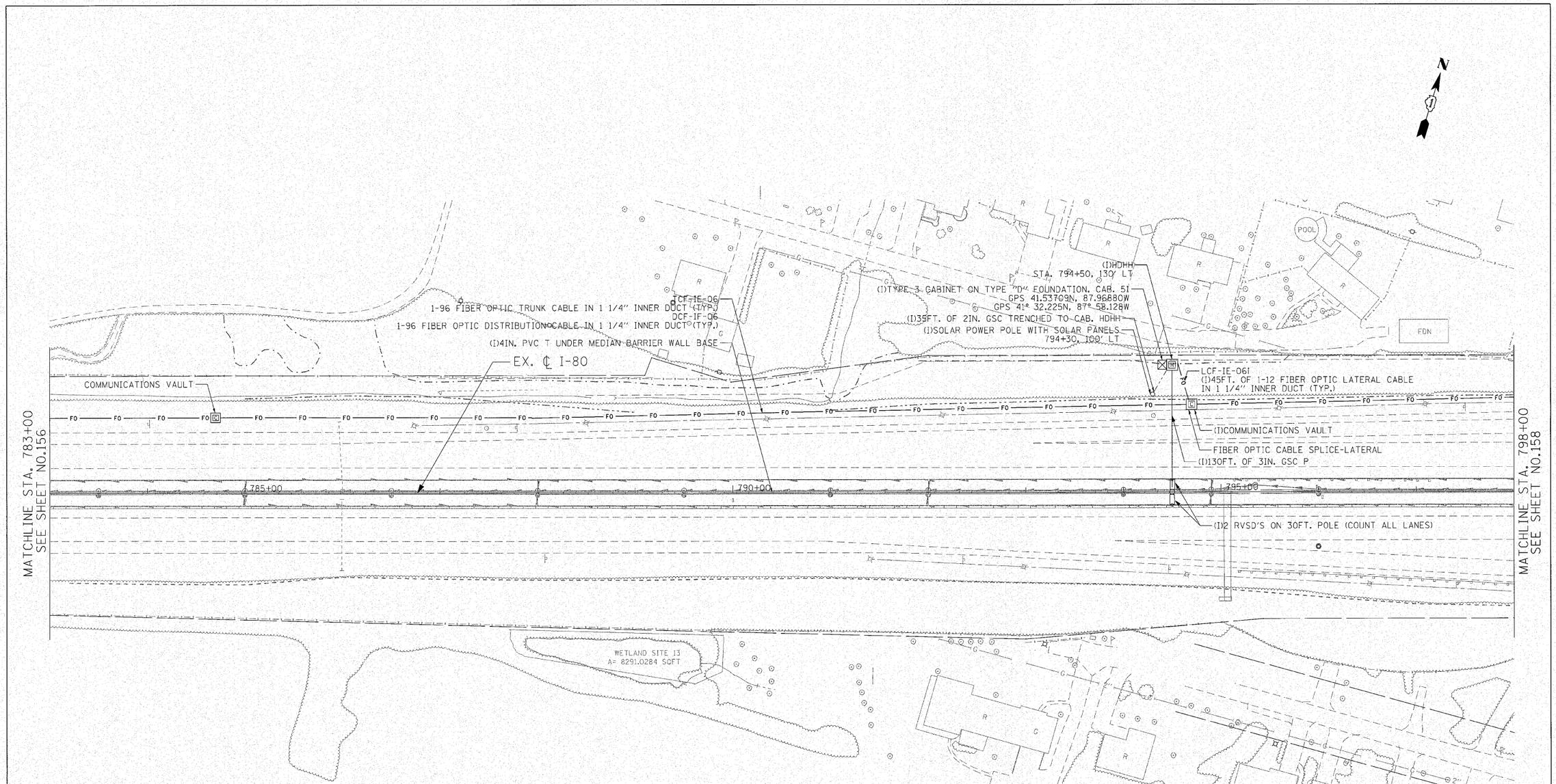

n:\proj\3384\2_west\design\ITS\3384-sum-06.dgn

ENGINEERING CONSULTANT	USER NAME = ccornwell	DESIGNED - JG & RT	REVISED -
Ciorba Group, Inc. CONSULTING ENGINEERS 1507 North Cumberland Avenue, Suite 402 Chicago, Illinois 60656 Phone: 773.775.6000 Fax: 773.775.4014 Email: chicago@ciorba.com		DRAWN - RJR	REVISED -
	PLOT SCALE = 50.0000 ' / IN.	CHECKED - JMV	REVISED -
	PLOT DATE = 10/27/2010	DATE - 10/27/2010	REVISED -

STATE OF ILLINOIS
DEPARTMENT OF TRANSPORTATION

F.A.I. 80 FROM US 30 TO NS RAILROAD
I.T.S. PLANS
1/2 MILE WEST OF I-355

SCALE: 1" = 50' | SHEET NO.157 OF 277 SHEETS | STA. 783+00 TO STA. 798+00

F.A.I. RTE.	SECTION	COUNTY	TOTAL SHEETS	SHEET NO.
80	99-5-Y	WILL	277	157
		CONTRACT NO. 60147		
	ILLINOIS	FED. AID PROJECT		

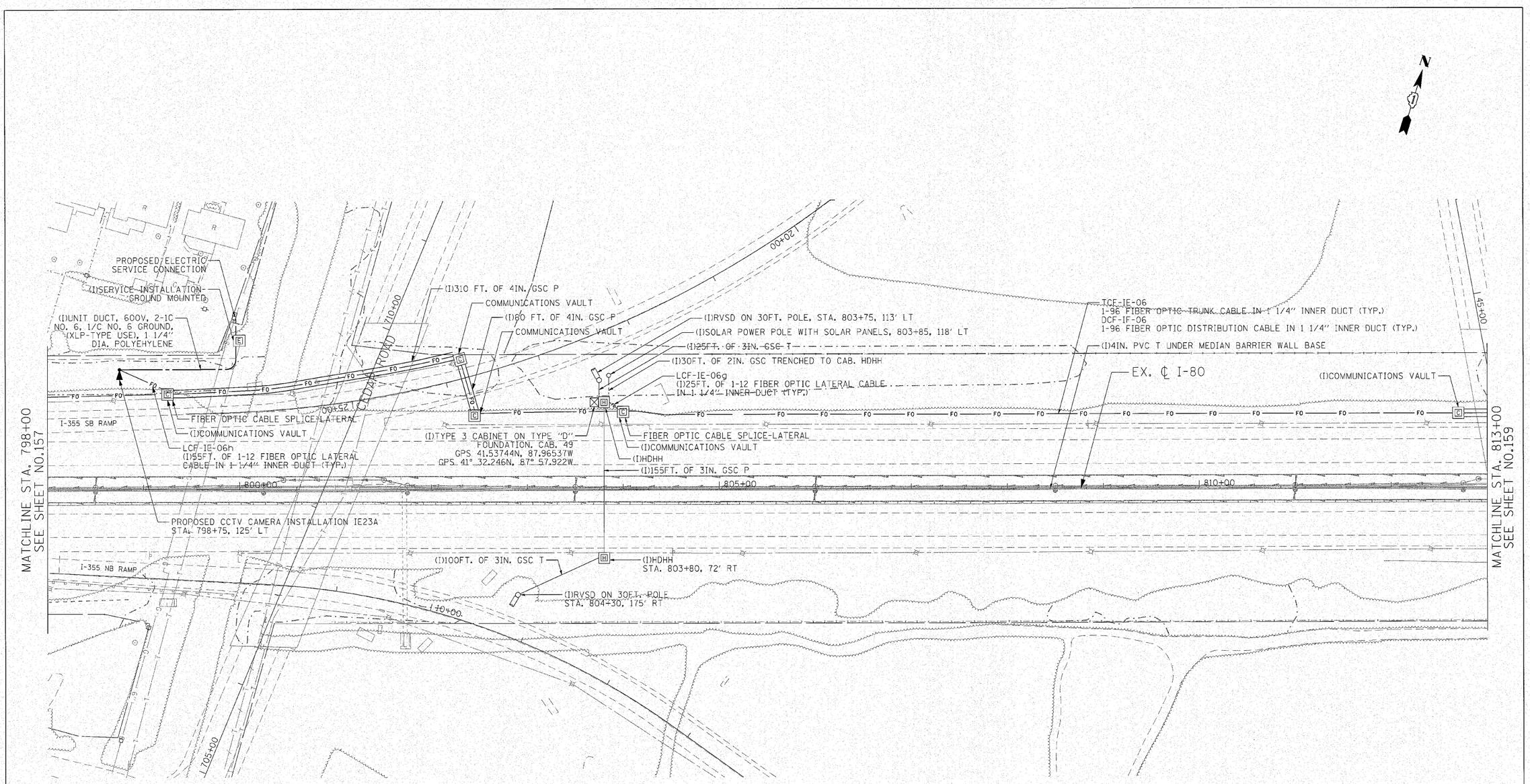

ENGINEERING CONSULTANT	USER NAME = ccornwell	DESIGNED - JG & RT	REVISED -	STATE OF ILLINOIS DEPARTMENT OF TRANSPORTATION	F.A.I. 80 FROM US 30 TO NS RAILROAD I.T.S. PLANS I-355 WEST RAMPS	F.A.I. RTE.	SECTION	COUNTY	TOTAL SHEETS	SHEET NO.
Ciorba Group, Inc. CONSULTING ENGINEERS 5507 North Cumberland Avenue, Suite 402 Chicago, Illinois 60656 Tel 773.775.4009 Fax 773.775.4014 Email chicago@ciorba.com		DRAWN - RJR	REVISED -			80	99-5-Y	WILL	277	158
	PLOT SCALE = 50.0000 ' / IN.	CHECKED - JMV	REVISED -					CONTRACT NO. 60147		
	PLOT DATE = 10/27/2010	DATE - 10/27/2010	REVISED -		SCALE: 1" = 50' SHEET NO.158 OF 277 SHEETS STA. 798+00 TO STA. 813+00		ILLINOIS FED. AID PROJECT			

n:\proj\33842_west\design\ITS\3384-sur-07.dgn

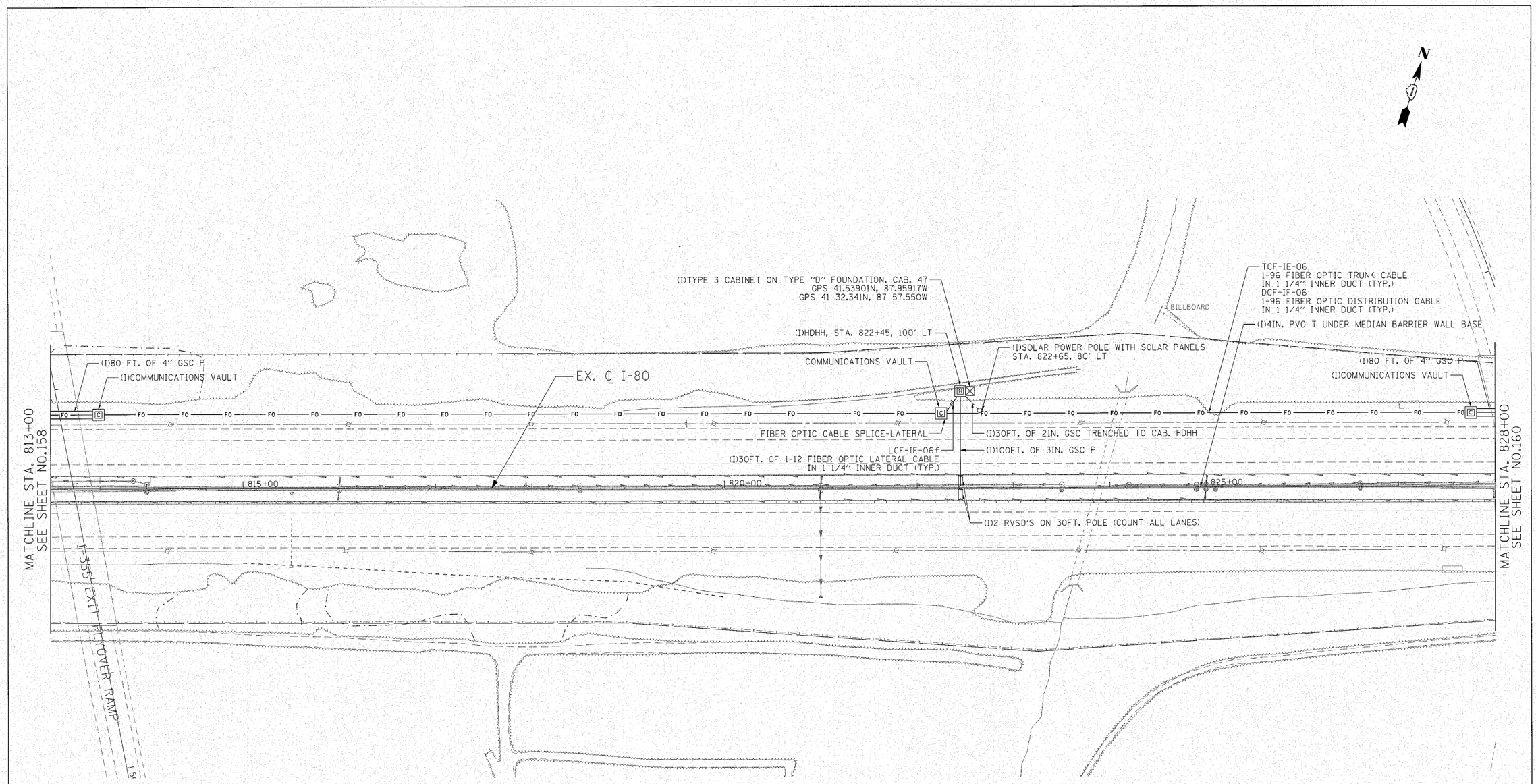

n:\proj\3384\2_west\design\I15\3384-sur08.dgn

ENGINEERING CONSULTANT	USER NAME = ccornwell	DESIGNED - JG & RT	REVISED -
Ciorba Group, Inc. CONSULTING ENGINEERS 5637 North Cumberland Avenue, Suite 402 Chicago, Illinois 60656 Tel: 773.775.4000 Fax 773.775.4014 Email chicago@ciorba.com		DRAWN - RJR	REVISED -
	PLOT SCALE = 50.0000 ' / IN.	CHECKED - JMV	REVISED -
	PLOT DATE = 10/27/2010	DATE - 10/27/2010	REVISED -

STATE OF ILLINOIS
DEPARTMENT OF TRANSPORTATION

F.A.I. 80 FROM US 30 TO NS RAILROAD
I.T.S. PLANS
I-355

SCALE: 1" = 50' | SHEET NO.159 OF 277 SHEETS | STA. 813+00 TO STA. 828+00

F.A.I. RTE.	SECTION	COUNTY	TOTAL SHEETS	SHEET NO.
80	99-5-Y	WILL	277	159
		CONTRACT NO. 60147		
	ILLINOIS FED. AID PROJECT			

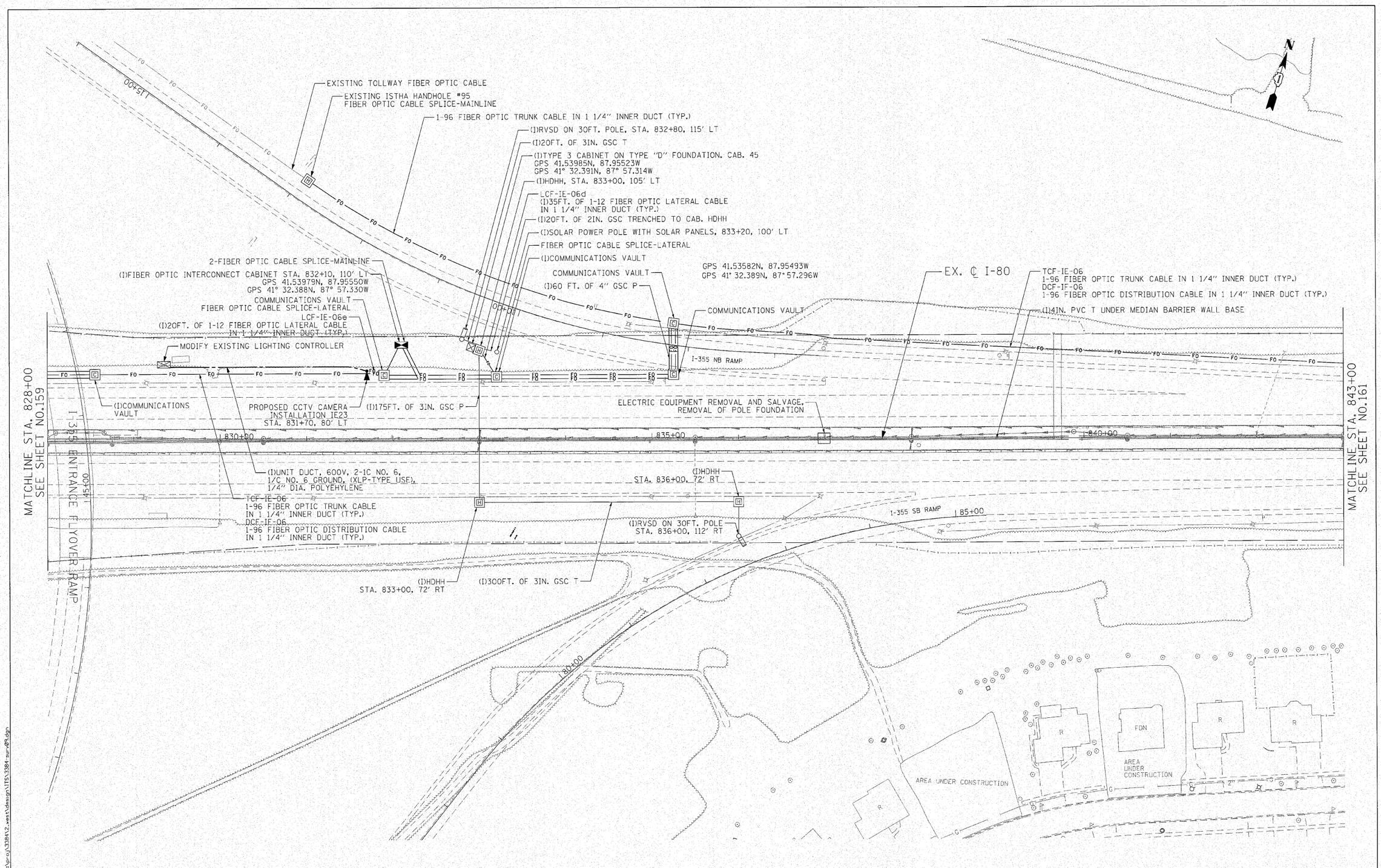

ENGINEERING CONSULTANT						
Ciorba Group, Inc. CONSULTING ENGINEERS 5607 North Cumberland Avenue, Suite 402 Chicago, Illinois 60656 Tel. 773.775.4300 Fax 773.775.4014 Email chicago@ciorba.com	USER NAME = ccornwell	DESIGNED - JG & RT	REVISED -	STATE OF ILLINOIS DEPARTMENT OF TRANSPORTATION	F.A.I. 80 FROM US 30 TO NS RAILROAD I.T.S. PLANS I-355 EAST RAMPS	
		DRAWN - RJR	REVISED -			
	PLOT SCALE = 50.0000 ' / IN.	CHECKED - JMV	REVISED -			
	PLOT DATE = 10/27/2010	DATE - 10/27/2010	REVISED -		SCALE: 1" = 50' SHEET NO.160 OF 277 SHEETS STA. 828+00 TO STA. 843+00	

F.A.I. RTE.	SECTION	COUNTY	TOTAL SHEETS	SHEET NO.
80	99-5-Y	WILL	277	160
		CONTRACT NO. 60147		
	ILLINOIS FED. AID PROJECT			

r:\ybr-o\33841.2_west\design\ITS\3384-sur009.dgn

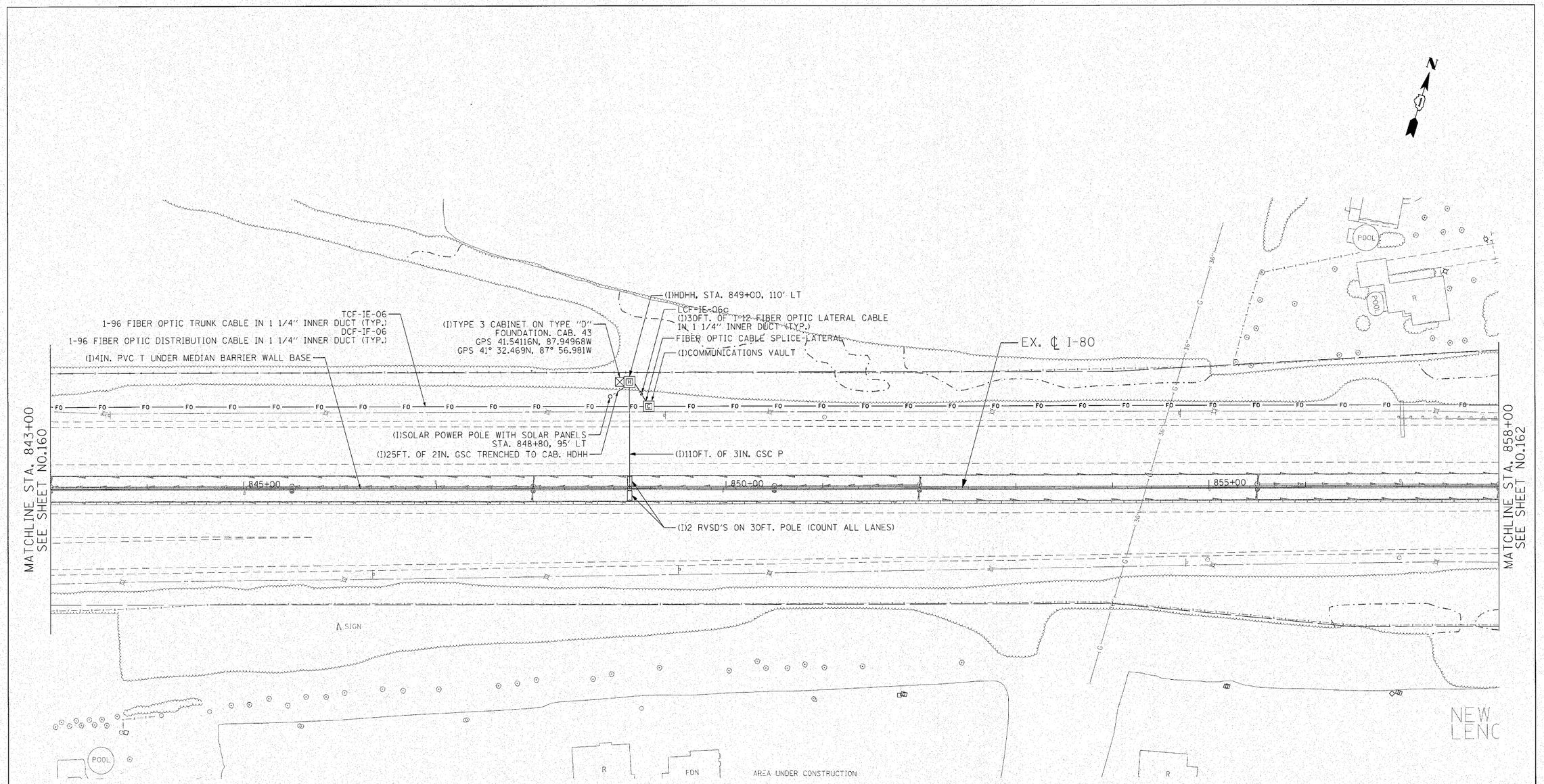

n:\proj\3384\2_west\design\ITS\3384-sum10.dgn

ENGINEERING CONSULTANT	USER NAME = ccornwell	DESIGNED - JG & RT	REVISED -	STATE OF ILLINOIS DEPARTMENT OF TRANSPORTATION	F.A.I. 80 FROM US 30 TO NS RAILROAD I.T.S. PLANS 1/2 MILE WEST OF PARKER ROAD	F.A.I. RTE.	SECTION	COUNTY	TOTAL SHEETS	SHEET NO.
Ciorba Group, Inc. CONSULTING ENGINEERS 5507 North Cumberland Avenue, Suite 402 Chicago, Illinois 60656 Tel. 773.775.4009 Fax 773.775.4014 Email chicago@ciorba.com		DRAWN - RJR	REVISED -			80	99-5-Y	WILL	277	161
	PLOT SCALE = 50.0000 ' / IN.	CHECKED - JMV	REVISED -					CONTRACT NO. 60147		
	PLOT DATE = 10/27/2010	DATE - 10/27/2010	REVISED -		SCALE: 1" = 50' | SHEET NO.161 OF 277 SHEETS | STA. 843+00 TO STA. 858+00			ILLINOIS FED. AID PROJECT		

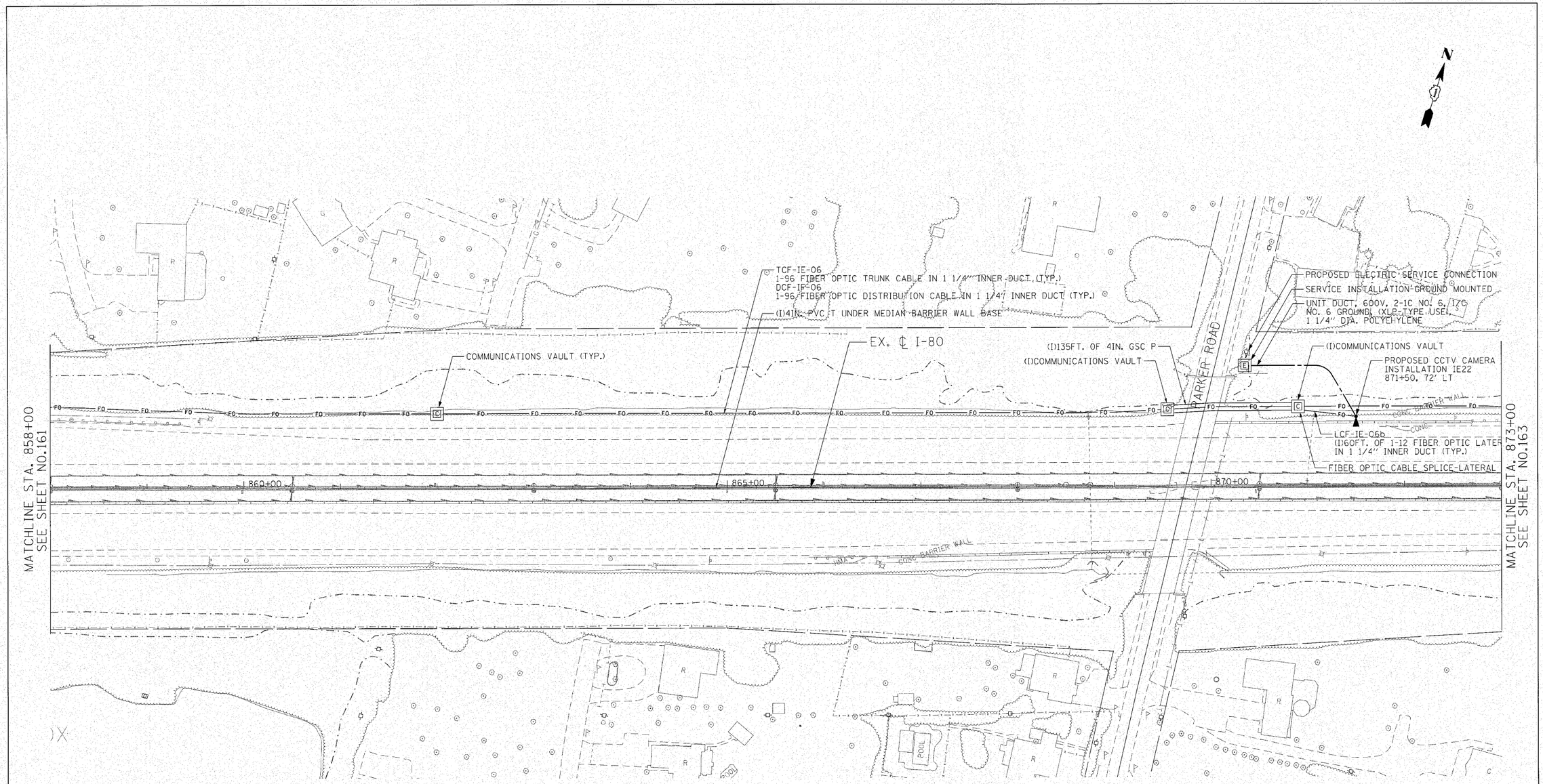

nt\pro\33841\2_west\design\ITS\3384-sur-v11.dgn

ENGINEERING CONSULTANT	USER NAME = ccornwell	DESIGNED - JG & RT	REVISED -	STATE OF ILLINOIS DEPARTMENT OF TRANSPORTATION	F.A.I. 80 FROM US 30 TO NS RAILROAD I.T.S. PLANS	F.A.I. RTE.	SECTION	COUNTY	TOTAL SHEETS	SHEET NO.
Ciorba Group, Inc. CONSULTING ENGINEERS 5507 North Cumberland Avenue, Suite 402 Chicago, Illinois 60656 Tel. 773.775.4009 Fax 773.775.4014 Email chicago@ciorba.com		DRAWN - RJR	REVISED -			80	99-5-Y	WILL	277	162
	PLOT SCALE = 50.0000 ' / IN.	CHECKED - JMV	REVISED -					CONTRACT NO. 60147		
	PLOT DATE = 10/27/2010	DATE - 10/27/2010	REVISED -		SCALE: 1" = 50' | SHEET NO.162 OF 277 SHEETS | STA. 858+00 TO STA. 873+00		ILLINOIS	FED. AID PROJECT		

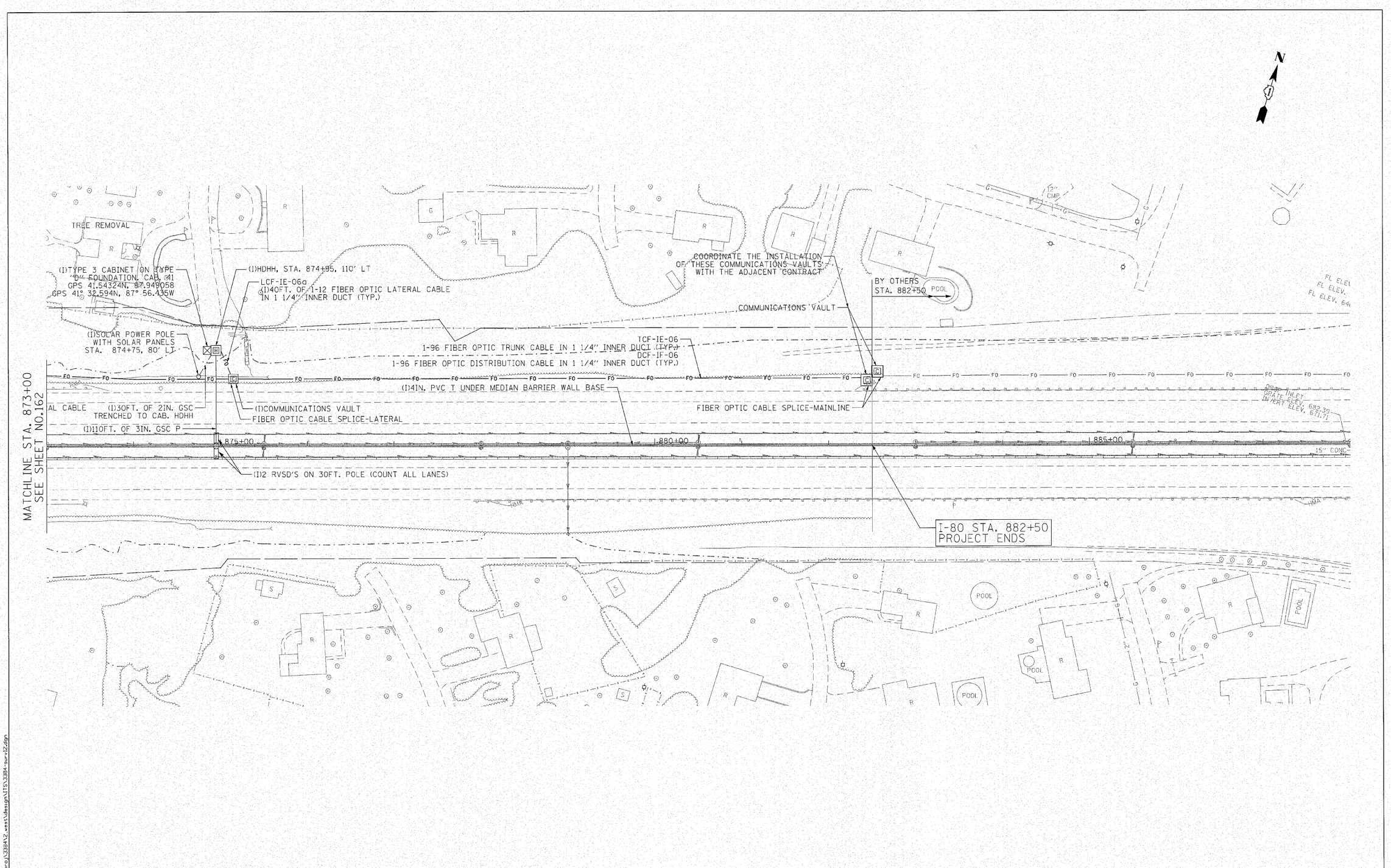

n:\proj\33842_west\design\ITS\3384-sur-12.dgn

ENGINEERING CONSULTANT	USER NAME = ccornwell	DESIGNED - JG & RT	REVISED -
Ciorba Group, Inc. CONSULTING ENGINEERS 5507 North Cumberland Avenue, Suite 402 Chicago, Illinois 60656 Tel 773.775.4300 Fax 773.775.4014 Email chicago@ciorba.com		DRAWN - RJR	REVISED -
	PLOT SCALE = 50.0000 ' / IN.	CHECKED - JMV	REVISED -
	PLOT DATE = 10/27/2010	DATE - 10/27/2010	REVISED -

STATE OF ILLINOIS
DEPARTMENT OF TRANSPORTATION

F.A.I. 80 FROM US 30 TO NS RAILROAD
I.T.S. PLANS
PARKER ROAD

SCALE: 1" = 50' | SHEET NO.163 OF 277 SHEETS | STA. 873+00 TO STA. 882+50

F.A.I. RTE.	SECTION	COUNTY	TOTAL SHEETS	SHEET NO.
80	99-5-Y	WILL	277	163
		CONTRACT NO. 60147		
		ILLINOIS FED. AID PROJECT		

F.A.P. RTE.	SECTION	COUNTY	TOTAL SHEETS	SHEET NO.
80	99-5-Y	WILL	277	164
STA.		TO STA.		
FED. ROAD DIST. NO. _		ILLINOIS	FED. AID PROJECT	

60147

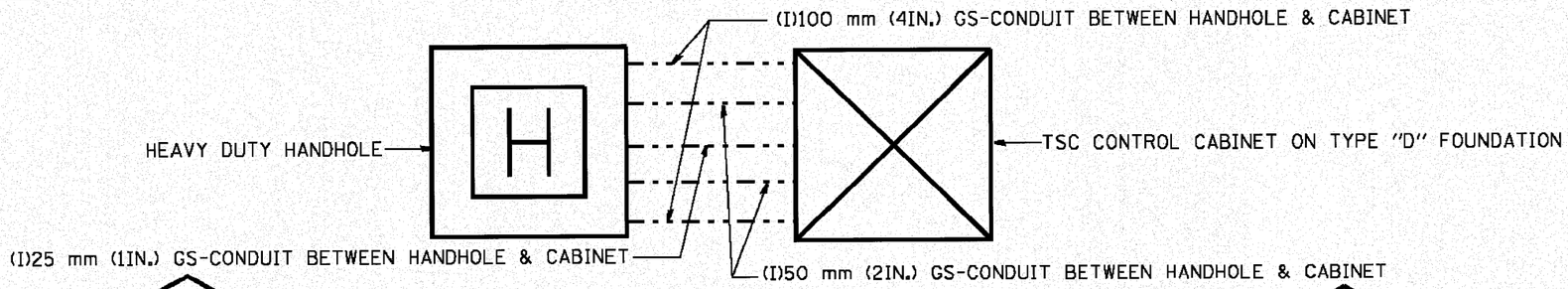

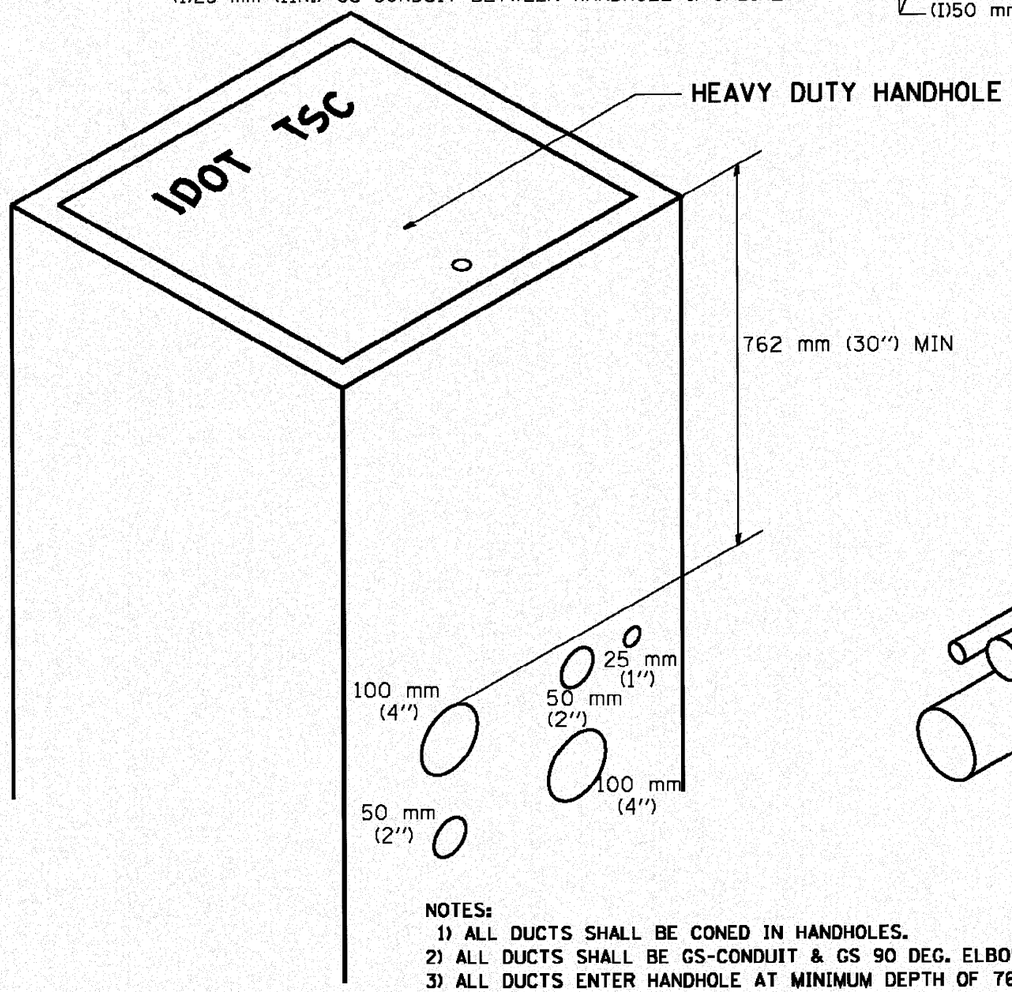

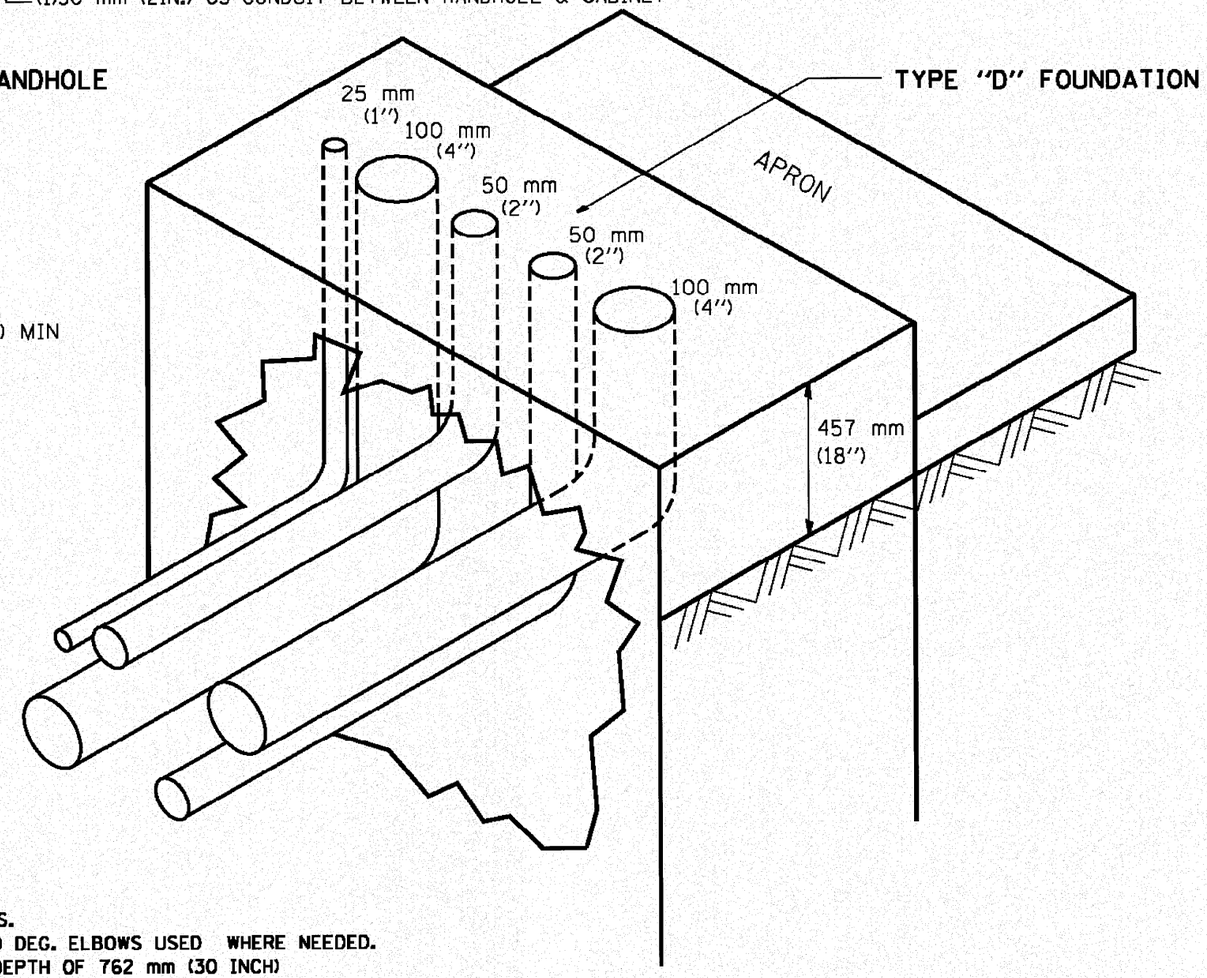

NOTES:

1) ALL DUCTS SHALL BE CONED IN HANDHOLES.
2) ALL DUCTS SHALL BE GS-CONDUIT & GS 90 DEG. ELBOWS USED WHERE NEEDED.
3) ALL DUCTS ENTER HANDHOLE AT MINIMUM DEPTH OF 762 mm (30 INCH)
4) ALL HANDHOLE COVERS SHALL READ "IDOT TSC".
5) ALL CABINET HANDHOLES SHALL BE HEAVY DUTY.
6) DUCTS SHALL BE CENTERED IN CABINET FOUNDATION/HANDHOLE AS SHOWN.
7) CONDUITS SHALL BE SPACED 305 mm (1 FOOT) CENTER TO CENTER IN HEAVY DUTY HANDHOLE.
8) INSTALL 20 mm X 3 m (3/4" X 10') COPPER CLAD STEEL GROUND ROD IN HDHH PROVIDED AS CABINET PAD. EXOTHERMIC WELD CONNECTION FROM GROUND ROD TO #6 GROUND WIRE INSULATED (GREEN).
9) BOND ALL GSC CONDUITS IN CABINET FOUNDATION.
10) INSTALL #6 GROUND WIRE IN 25 mm (1") GSC FROM HANDHOLE TO CABINET.
11) TYPE "D" FOUNDATION SHALL BE 18" FROM TOP OF FOUNDATION TO FINISHED GRADE.

REVISIONS	
NAME	DATE
T.C.	9/96
R.L.	3/99
R.L.	4/99

ILLINOIS DEPARTMENT OF TRANSPORTATION
TRAFFIC SYSTEMS CENTER

CABINET - HANDHOLE CONDUIT DETAIL

SCALE: VERT. HORIZ. NONE

DRAWN BY G.N.

DATE 8-5-95

CHECKED BY R.L.

ENGINEERING CONSULTANT
Clorba Group, Inc.
CONSULTING ENGINEERS
5607 North Cumberland Avenue, Suite 402
Chicago, Illinois 60656
Phone: 773.775.3900 Fax: 773.775.4814
Email: clorba@clorba.com

VI=40011

RD-TYPMET.DGN
RF=

TRAFFIC SYSTEMS CENTER (TY-1TSC-400#11)

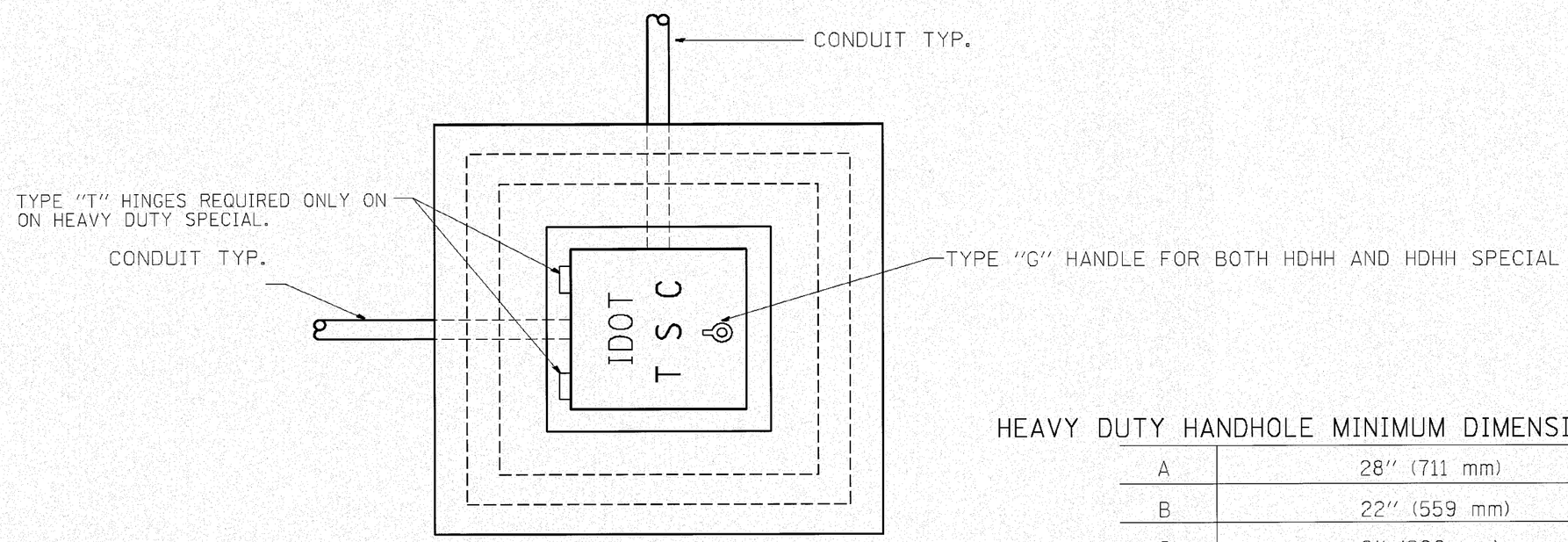

PLAN

HEAVY DUTY HANDHOLE MINIMUM DIMENSIONS (UNHINGED)

A	28" (711 mm)
B	22" (559 mm)
C	8" (200 mm)

(FRAME AND COVER 260 LBS. (118 Kg.) MIN.)

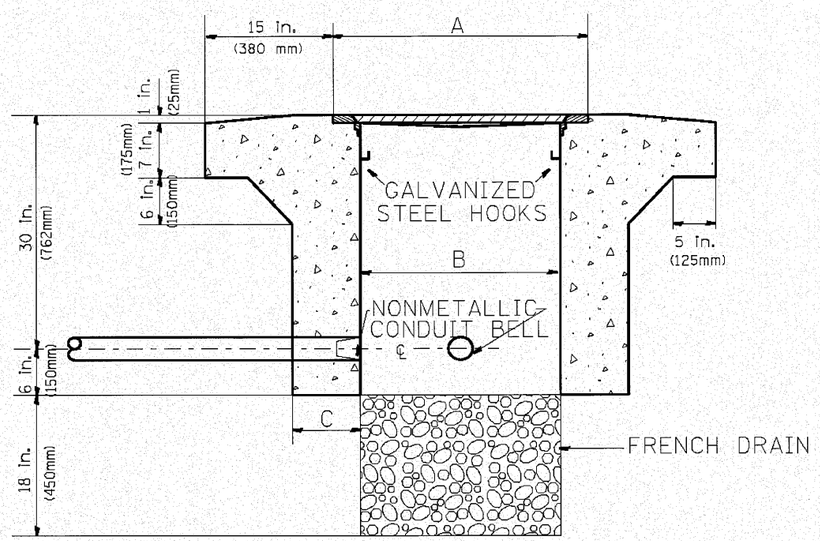

ELEVATION

HEAVY DUTY HANDHOLE SPECIAL MINIMUM DIMENSIONS

A	31.5" (800 mm)
B	30" (762 mm)
C	10" (250 mm)

(FRAME AND COVER 405 LBS. (184 Kg. (405))

PC CONCRETE - HEAVY DUTY HAND HOLE

ENGINEERING CONSULTANT
Cotten Group, Inc.
CONSULTING ENGINEERS
5537 North Cumberland Avenue, Suite 403
Chicago, Illinois 60656
Phone: 773.775.6000 Fax: 773.775.6014
Email: cotten@cotten.com

USER NAME = mazag	DESIGNED - R.L.	REVISED - 04/97	
	DRAWN - G.M.	REVISED -	
PLOT SCALE = 100.0000 ' / IN.	CHECKED - R.L.	REVISED -	
PLOT DATE = 8/27/2010	DATE - 09/11/96	REVISED -	

STATE OF ILLINOIS
DEPARTMENT OF TRANSPORTATION
TRAFFIC SYSTEMS CENTER

PC CONCRETE - HEAVY DUTY HAND HOLE

SCALE: NONE | SHEET NO. OF SHEETS | STA. TO STA.

F.A. RTE.	SECTION	COUNTY	TOTAL SHEETS	SHEET NO.
80	99-5-Y	WILL	277	165

CONTRACT NO. 60147

FED. ROAD DIST. NO. | ILLINOIS | FED. AID PROJECT

TRAFFIC SYSTEMS CENTER (TY-1TSC-400#15)

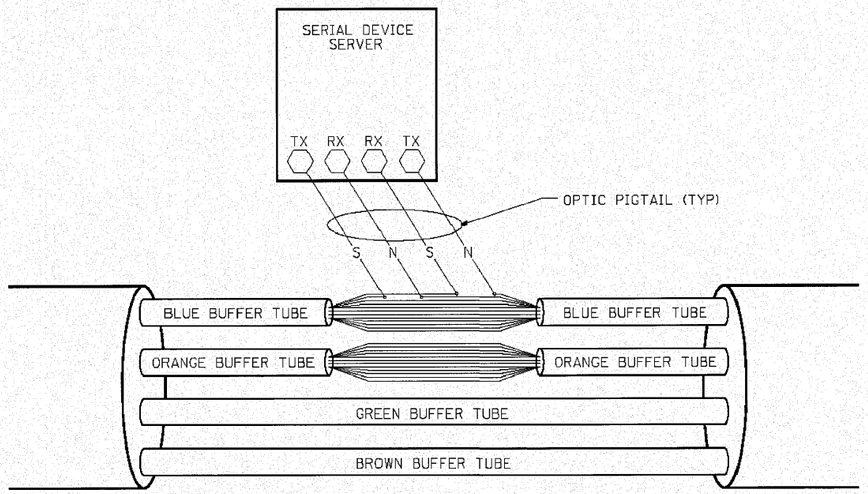

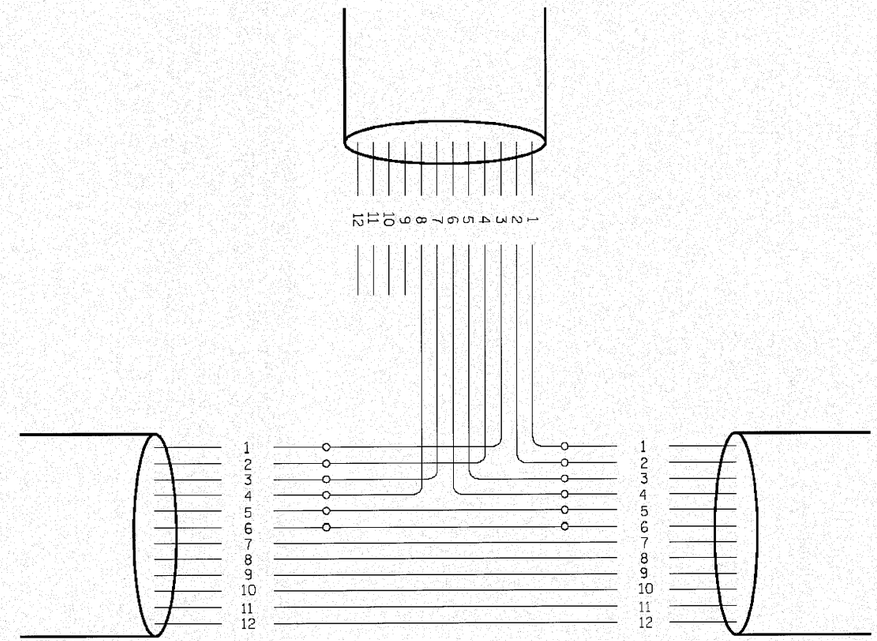

PHYSICAL SPLICE DETAILS (TYP)

(NOT TO SCALE)

FIBERS		FUNCTION	APPLICATION DESCRIPTION
FIBER NO.	COLOR CODE		
1	BLUE	IN TX	DATA CIRCUIT
2	ORANGE	IN RX	
3	GREEN	OUT RX	
4	BROWN	OUT TX	
5	SLATE	IN TX	DMS
6	WHITE	IN RX	
7	RED	OUT RX	
8	BLACK	OUT TX	
9	YELLOW	IN TX	CCTV
10	VIOLET	IN TX	
11	ROSE	OUT RX	
12	AQUA	OUT TX	

NOTE:

1.- THIS DIAGRAM IS PROVIDED FOR ILLUSTRATION PURPOSES ONLY AND DEPICTS A TYPICAL FIBER OPTIC SPLICE.

ENGINEERING CONSULTANT
Corlen Group, Inc.
CONSULTING ENGINEERS
8837 North Cumberland Avenue, Suite 432
Chicago, Illinois 60656
Tel. 773.775.4015 Fax 773.775.4014
Email: info@corlen.com

USER NAME = mazag	DESIGNED - J.G.	REVISED - 03/04/2010	
	DRAWN - G.M.	REVISED -	
PLOT SCALE = 100.0000 ' / IN.	CHECKED - J.G.	REVISED -	
PLOT DATE = 8/27/2010	DATE - 12/29/09	REVISED -	

STATE OF ILLINOIS
DEPARTMENT OF TRANSPORTATION
TRAFFIC SYSTEMS CENTER

FIBER OPTIC
SPLICING TYPICAL

SCALE: NONE | SHEET NO. OF SHEETS | STA. TO STA.

F.A. RTE.	SECTION	COUNTY	TOTAL SHEETS	SHEET NO.
80	99-5-Y	WILL	277	166

CONTRACT NO. 60147

FED. ROAD DIST. NO. | ILLINOIS | FED. AID PROJECT

TRAFFIC SYSTEMS CENTER 4TY-1TSC-400#41)

c:\pw_work\33841-east\design\ITS\33841-Detail_Surveillance03.dgn

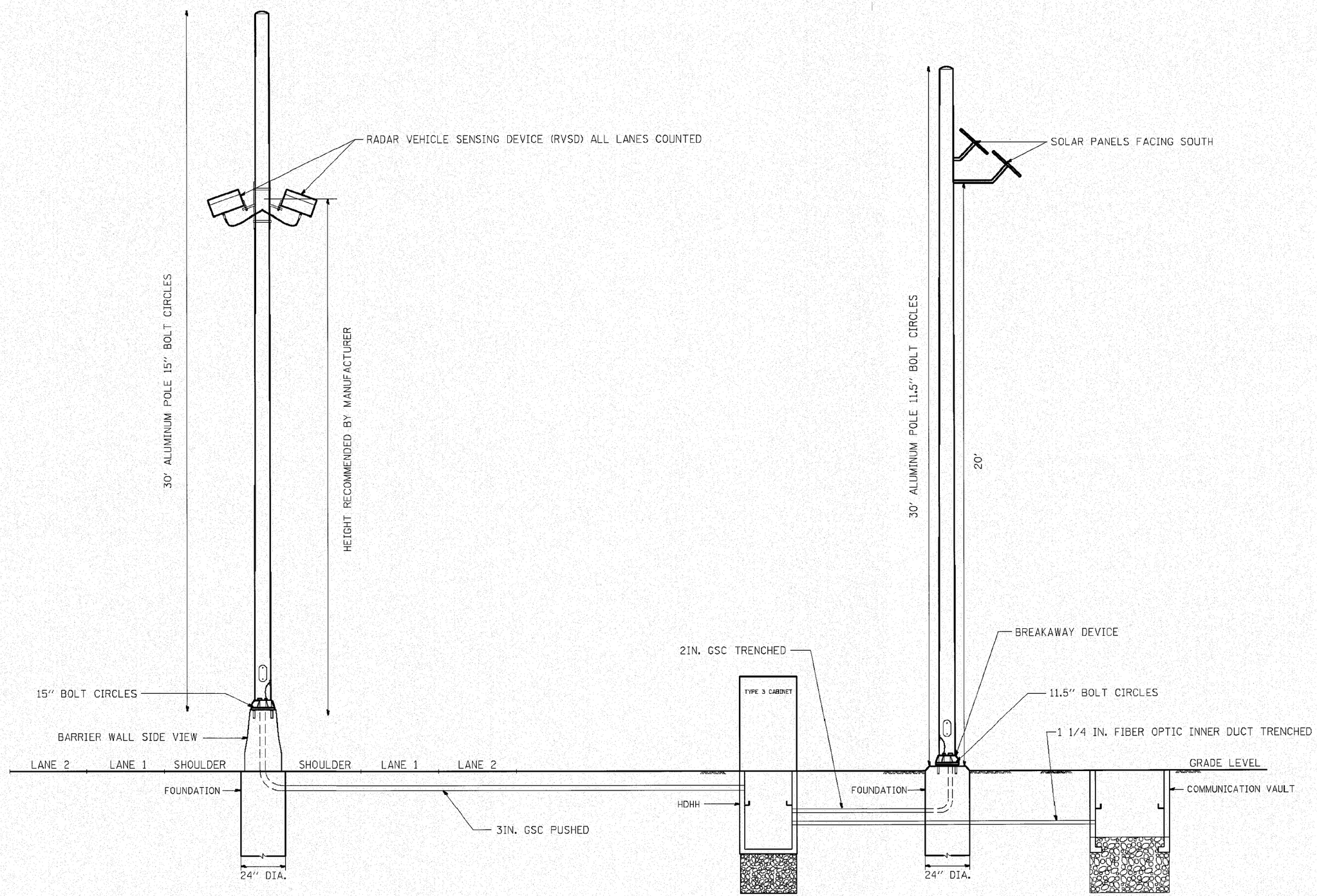

ENGINEERING CONSULTANT
Clarke Group, Inc.
CONSULTING ENGINEERS
5667 North Cumberland Avenue, Suite 402
Chicago, Illinois 60656
Tel: 773.775.6000 Fax: 773.775.6014
Email: info@clarke-group.com

USER NAME = mazag	DESIGNED - J.G.	REVISED -	
	DRAWN - G.M.	REVISED -	
PLOT SCALE = 100.0000 ' / IN.	CHECKED - J.G.	REVISED -	
PLOT DATE = 10/15/2010	DATE - 08-25-2010	REVISED -	

STATE OF ILLINOIS
DEPARTMENT OF TRANSPORTATION
TRAFFIC SYSTEMS CENTER

RVSD ROAD WAY LAYOUT

SCALE: NONE | SHEET NO. OF SHEETS | STA. TO STA.

F.A. RTE.	SECTION	COUNTY	TOTAL SHEETS	SHEET NO.
80	99-5-Y	WILL	277	167
		CONTRACT NO. 60147		
FED. ROAD DIST. NO.	ILLINOIS	FED. AID PROJECT		

TRAFFIC SYSTEMS CENTER (TY-1TSC-400#55)

rivers\33842-west\design\TS\33842-Detail Sheet\lance04.dgn

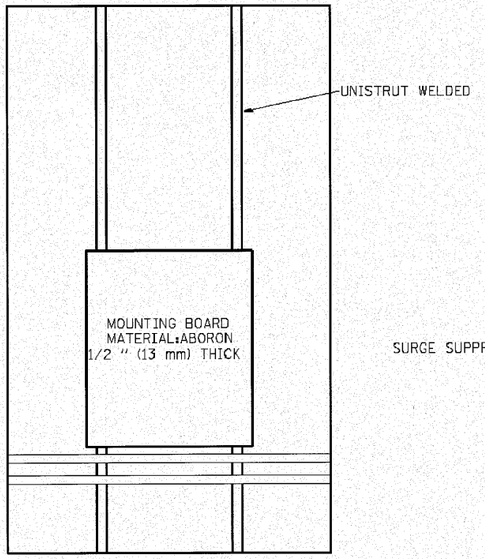

SIDE VIEW ESP 3 & 4 CABINET

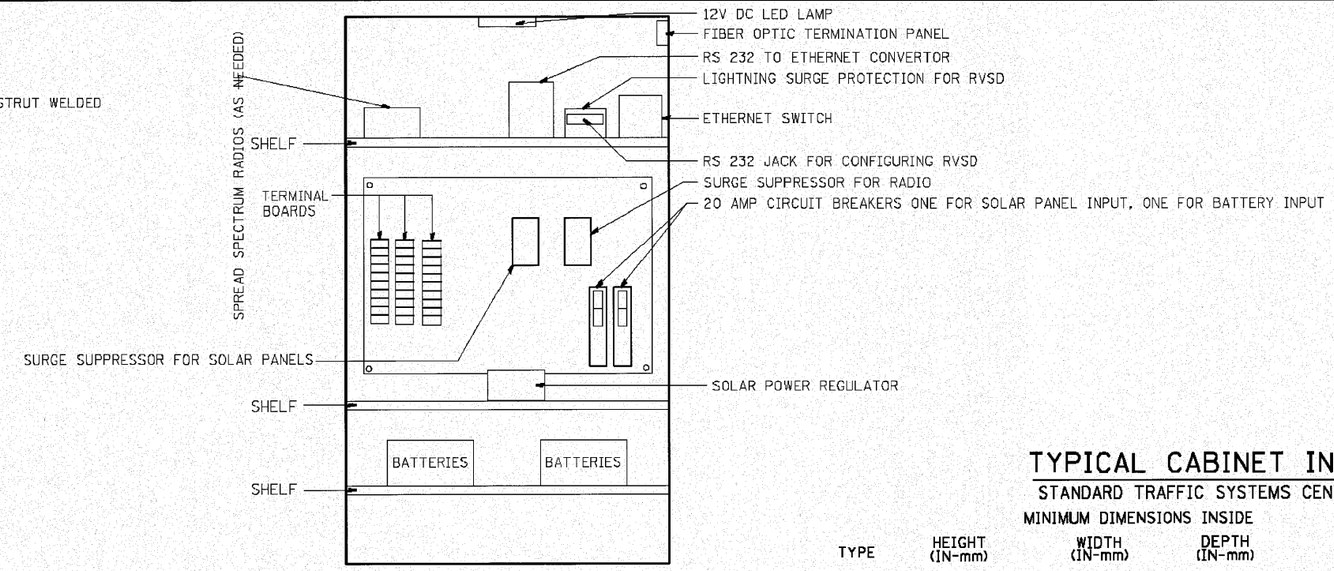

ESP 3 CABINET

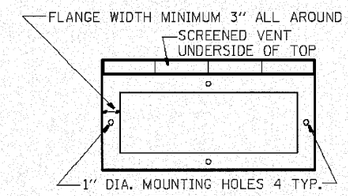

BOTTOM VIEW
MOUNTING PATTERN

TYPICAL CABINET INTERIORS

STANDARD TRAFFIC SYSTEMS CENTER CABINETS

MINIMUM DIMENSIONS INSIDE

TYPE	HEIGHT (IN-mm)	WIDTH (IN-mm)	DEPTH (IN-mm)	THICKNESS (IN-mm)	MATERIAL
ESP1	22.5" (571.5 mm)	14.25" (361.95mm)	9.75" (247.65mm)	3/16 " (4.76mm)	FABRICATED ALUMINUM
ESP2	36" (914.4mm)	20" (508.0mm)	15" (381.0mm)	73/16" (4.76mm)	FABRICATED ALUMINUM
ESP3	49.5" (1.26 m)	30" (762.0mm)	17" (431.8mm)	3/16 " (4.76mm)	FABRICATED ALUMINUM
ESP4	55" (1.4 m)	44" (1.12 m)	26" (660.4mm)	3/16" (4.76mm)	FABRICATED ALUMINUM

NOTES:

1. CABINETS, CABINET POSTS AND CABINET PEDESTALS SHALL BE PRIMED AND PAINTED IN ACCORDANCE WITH SECTION T637 OF THE "STANDARD SPECIFICATIONS FOR TRAFFIC CONTROL ITEMS". THE FINAL COAT SHALL BE (X) IN COLOR. THE INTERIOR SHALL BE PAINTED WHITE. SIGNAL POSTS AND HEADS TO BE FEDERAL YELLOW 89-19(MAUTZ).

(X)

EDENS	WALNUT *
KENNEDY	BLUE STREAK **
EISENHOWER	CARIBBEAN BLUE *
I-290/IL53/I-355	POST OFFICE BLUE **
RYAN	YELLOW STONE II **
I-55	MEDIUM BRONZE *
I-57	RED BARON **
CAL-KING	BLUE STREAK **
LAKE SHORE DR.	GREEN *
I-80	STATUARY BRONZE **

ALL RAMP METERING CABINETS LIME GREEN ***. ALL POSTS, T.S. HEADS AND SERVICES WILL BE PAINTED FEDERAL YELLOW.

* MORTON POWDER PAINT COLOR OR EQUIVALENT.
** O'BRIEN POWDER PAINT COLOR OR EQUIVALENT.
*** BENJAMIN MOORE ENAMEL COLOR OR EQUIVALENT.

NO ADDITIONAL COMPENSATION SHALL BE ALLOWED FOR CONFORMING TO COLOR REQUIREMENTS

2. CABINETS SHALL BE INSTALLED IN ACCORDANCE WITH APPLICABLE PORTIONS OF SECTION T400 OF THE "STANDARD SPECIFICATIONS FOR TRAFFIC CONTROL ITEMS".
3. INCIDENTAL TO THE COST OF EACH CABINET THE CONTRACTOR SHALL CONSTRUCT A 5 INCH (130mm) PCC SIDEWALK OF A RECTANGULAR AREA 3 FEET (915 mm) BY 4 FEET (1.25 m) IMMEDIATELY ADJACENT TO THE CABINET FOUNDATION ON THE SAME SIDE OF THE FOUNDATION AS THE CABINET DOOR TO PROVIDE FOOTING DURING INSTALLATION AND MAINTENANCE.
4. ANCHOR BOLTS FOR PEDESTAL AND BASE MOUNTED CABINETS SHALL BE CONSIDERED INCIDENTAL TO THE COST OF THE CABINET.
5. ALL CABINETS SHALL HAVE TERMINAL BLOCKS AND SHELVES AS SHOWN. THESE ITEMS SHALL BE CONSIDERED INCIDENTAL TO THE COST OF THE CABINET.
6. THE CABINET DOOR SHALL BE HINGED ON THE RIGHT SIDE WHEN FACING THE CABINET. THE DOOR SHALL BE FURNISHED WITH A GASKET THAT SHALL FORM A WEATHER TIGHT SEAL BETWEEN THE CABINET AND DOOR. THE HINGES SHALL BE CONTINUOUS AND BOLTED TO THE CABINET AND DOOR UTILIZING 1/4-20 STAINLESS STEEL CARRIAGE BOLTS AND NY-LOCK NUTS. THE HINGES WILL BE MADE OF STAINLESS STEEL WITH A 0.25 INCH (6.35 mm) DIAMETER STAINLESS STEEL HINGE PIN. THE HINGE PIN SHALL BE CAPPED TOP AND BOTTOM BY WELD TO RENDER IT TAMPER PROOF.
7. THE LATCHING MECHANISM SHALL BE A 3 POINT DRAW ROLLER TYPE. THE CENTER CATCH AND PUSHRODS SHALL BE EITHER CADMIUM OR ZINC PLATED, TYPE II CLASS I. PUSHRODS WILL BE TURNED EDGEWISE AT THE OUTWARD SUPPORTS AND SHALL BE 0.25 INCH (6.35 mm) BY 0.75 INCH (19.05 mm), MINIMUM. ROLLERS SHALL HAVE A MINIMUM DIAMETER OF 0.875 INCH (22.22 mm) AND WILL BE MADE OF NYLON. THE CENTER CATCH SHALL BE FABRICATED FROM 0.14 INCH (3.55 mm) STEEL, MIMIMUM. WHEN THE DOOR IS CLOSED AND LATCHED, IT WILL BE LOCKED. THE LATCHING HANDLE SHALL HAVE A PROVISION FOR PADLOCKING IN THE CLOSED POSITION. AN OPERATING HANDLE SHALL BE FURNISHED WITH EACH LOCK. THE HANDLE WILL BE STAINLESS STEEL WITH A 0.75 INCH (19.05 mm) DIAMETER SHANK.
8. THE ENCLOSURE SHALL BE EQUIPPED WITH TWO ADJUSTABLE "C" MOUNTING CHANNELS WELDED ON BOTH SIDE WALLS AND BACK WALL OF THE ENCLOSURE, ALLOWING VERSATILE POSITIONING OF SHELVES OR PANELS. MOUNTING CHANNELS SHALL BE FACTORY PAINTED SAME COLOR AS INTERIOR OF CABINET.
9. CABINET DOOR SHALL NOT HAVE COMPARTMENT DOORS OR LOUVERS.
10. ALL FIELD CABINETS SHALL BE FITTED WITH BRASS LOCKS (CORBIN #2).
11. ESP TYPE 3 AND 4 CABINETS FITTED WITH THREE SHELVES AS SHOWN.
12. THE CONTROL CABINET SHALL BE SET PLUMB ON THE FOUNDATION AND FASTENED TO THE ANCHOR BOLTS WITH NUTS AND WASHERS. FLAT WASHERS SHALL BE INSTALLED BELOW AND ABOVE THE BASE PLATE OF THE CONTROL CABINET. LOCKWASHERS SHALL BE INSTALLED ON TOP OF THE TOP FLAT WASHER.

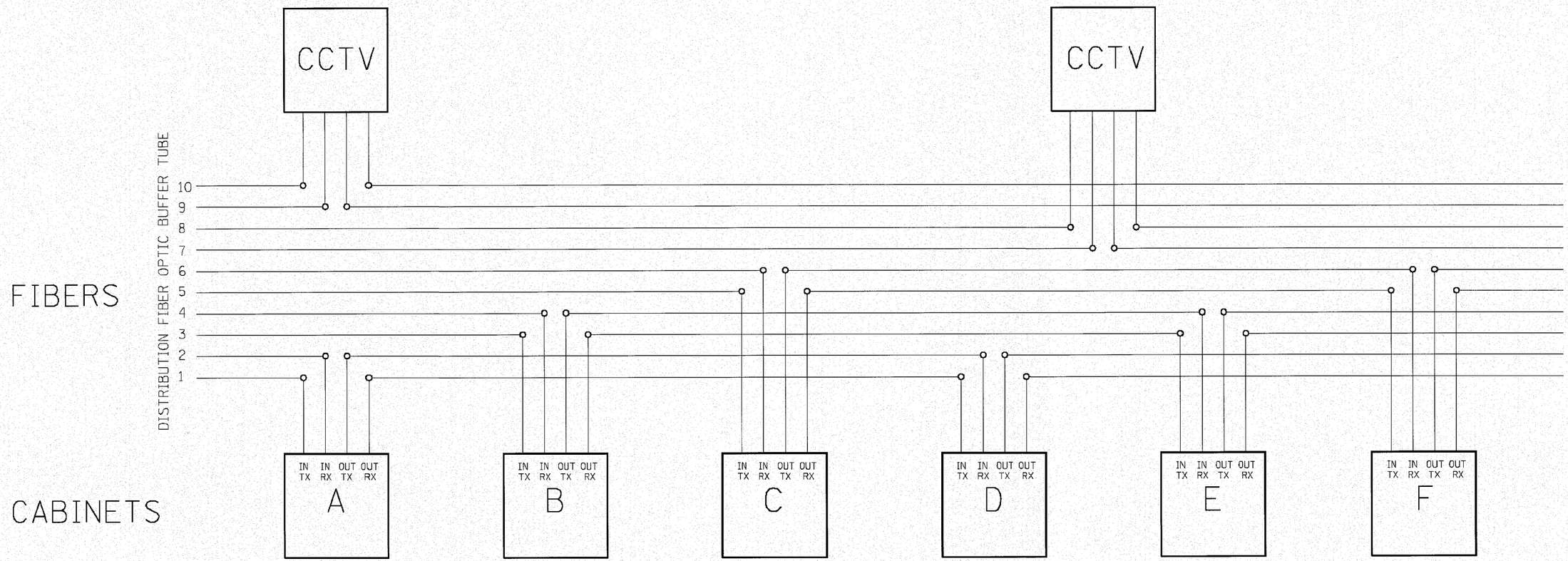

FIBERS 1 AND 2 CABINETS 25, 31, 37, 43, 49, 55.
FIBERS 3 AND 4 CABINETS 27, 33, 39, 45, 51.
FIBERS 5 AND 6 CABINETS 29, 35, 41, 47, 53.

ENGINEERING CONSULTANT
Clark Group, Inc.
CONSULTING ENGINEERS
5507 North Cumberland Avenue, Suite 400
Chicago, Illinois 60656
Phone: 773.775.9400 Fax: 773.775.6014
Email: chicago@clarkgroup.com

USER NAME = mecag	DESIGNED - J.G.	REVISED - 01/27/2010	
	DRAWN - G.M.	REVISED - 03/05/2010	
PLOT SCALE = 100.0000 ' / IN.	CHECKED - J.G.	REVISED - J.G. 10/15/2010	
PLOT DATE = 10/20/2010	DATE - 12/29/09	REVISED - J.G. 10/19/2010	

STATE OF ILLINOIS
DEPARTMENT OF TRANSPORTATION
TRAFFIC SYSTEMS CENTER

FIBER OPTIC
SPLICING DETAIL (I80)

SCALE: NONE | SHEET NO. OF SHEETS | STA. TO STA.

F.A. RTE.	SECTION	COUNTY	TOTAL SHEETS	SHEET NO.
80	99-5-Y	WILL	277	169
		CONTRACT NO. 60I47		
FED. ROAD DIST. NO.	ILLINOIS	FED. AID PROJECT		

TRAFFIC SYSTEMS CENTER 4TY-1TSC-400#58)

m:\proj\33841\2_west\design\TS\33844-Detail Surveillance06.dgn

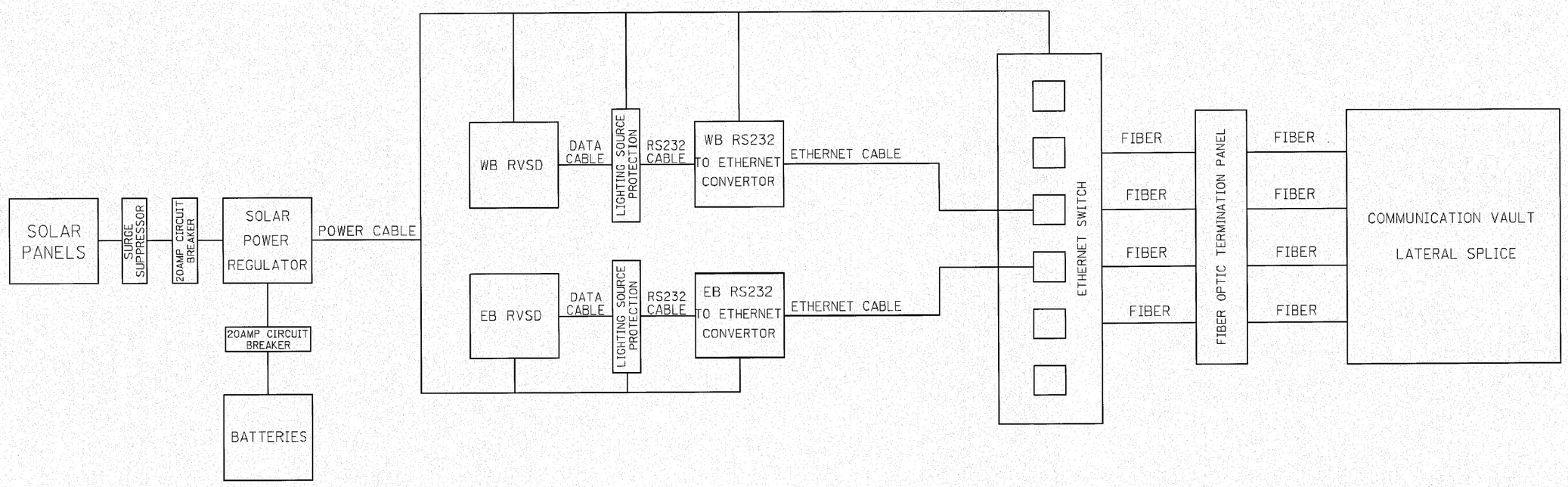

ENGINEERING CONSULTANT Clarke Group, Inc. CONSULTING ENGINEERS	USER NAME = mazeg	DESIGNED - J.G.	REVISED - J.G. 10/15/2010	STATE OF ILLINOIS DEPARTMENT OF TRANSPORTATION TRAFFIC SYSTEMS CENTER
		DRAWN - G.M.	REVISED -	
	PLOT SCALE = 100.0000 ' / IN.	CHECKED - J.G.	REVISED -	
	PLOT DATE = 10/15/2010	DATE - 08/24/2010	REVISED -	

RVSD ROADWAY BLOCK DIAGRAM

SCALE: NONE | SHEET NO. OF SHEETS | STA. TO STA.

F.A. RTE.	SECTION	COUNTY	TOTAL SHEETS	SHEET NO.
80	99-5-Y	WILL	277	170
		CONTRACT NO. 60147		
FED. ROAD DIST. NO.	ILLINOIS	FED. AID PROJECT		

TRAFFIC SYSTEMS CENTER (TY-1TSC-400#60)

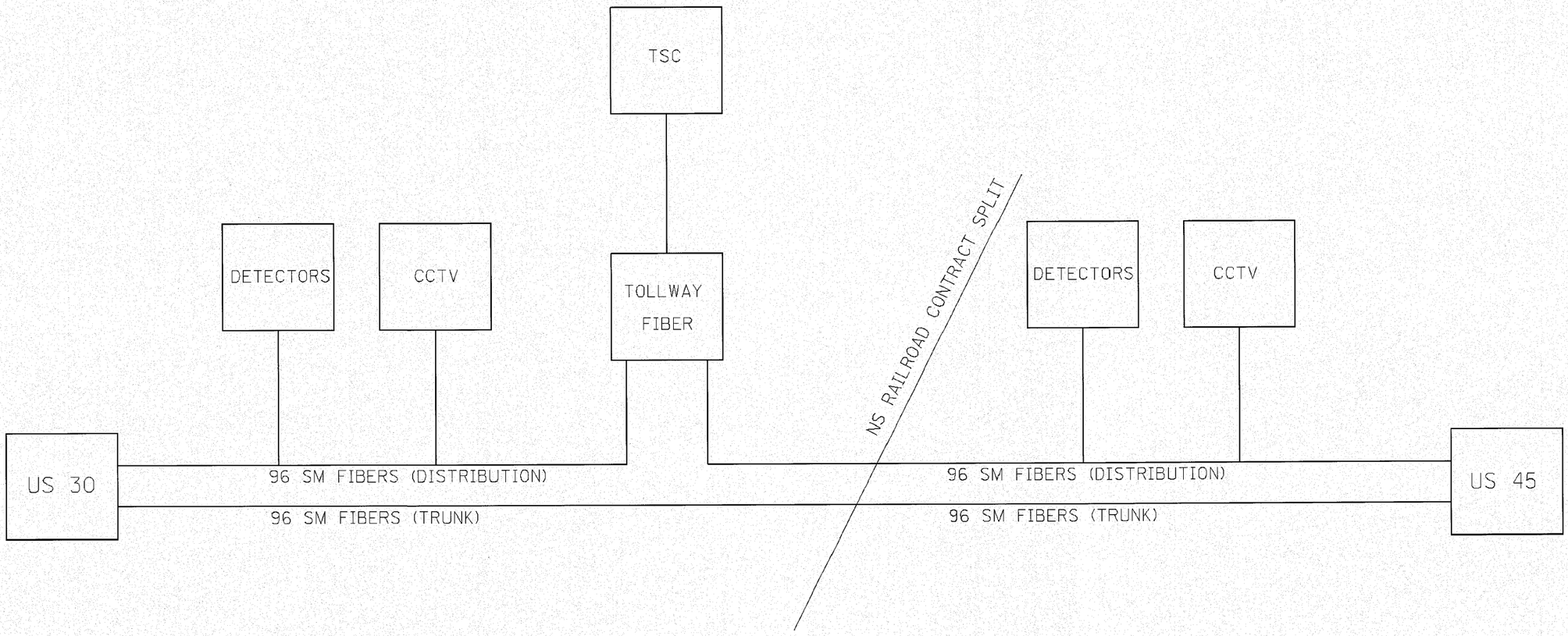

ENGINEERING CONSULTANT
Clarke Group, Inc.
CONSULTING ENGINEERS
6867 North Cumberland Avenue, Suite 402
Chicago, Illinois 60631
Tel. 773.775.6006 Fax 773.775.6014
Email chicago@clarke.com

USER NAME = mazag	DESIGNED - J.G.	REVISED - J.G. 10/15/2010	
	DRAWN - G.M.	REVISED -	
PLOT SCALE = 100.0000 ' / IN.	CHECKED - J.G.	REVISED -	
PLOT DATE = 10/15/2010	DATE - 08/24/2010	REVISED -	

STATE OF ILLINOIS
DEPARTMENT OF TRANSPORTATION
TRAFFIC SYSTEMS CENTER

FIBER ROUTE (180)

SCALE: NONE | SHEET NO. OF SHEETS | STA. TO STA.

F.A.I. RTE.	SECTION	COUNTY	TOTAL SHEETS	SHEET NO.
80	99-5-Y	WILL	277	171
		CONTRACT NO. 60147		
FED. ROAD DIST. NO.	ILLINOIS	FED. AID PROJECT		

TRAFFIC SYSTEMS CENTER (TY-1TSC-400#61)

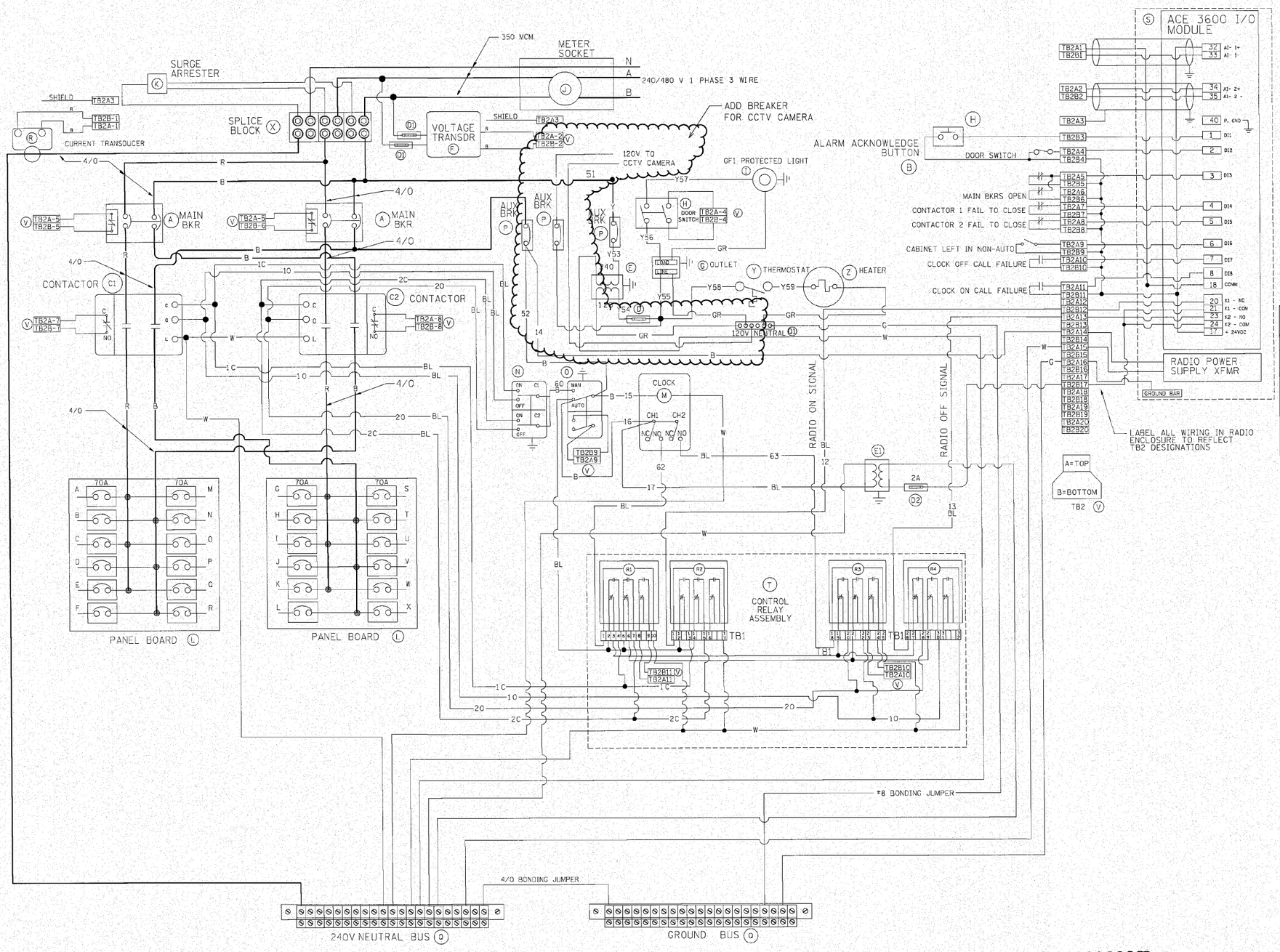

BILL OF MATERIALS

ITEM #	QTY	DESCRIPTION
A	2	MAIN CIRCUIT BREAKERS 2 POLE 175 AMP WITH AUX CONTACT
B	1	ACKNOWLEDGE SWITCH, PUSH BUTTON WITH YELLOW INSERT
C1, C2	2	CONTACTOR 2 POLE 200 AMP 240V COIL WITH AUX CONTACTS
D	1	FINGERSAFE FUSE HOLDER WITH KTK-20A FUSE
D1	2	FINGERSAFE FUSE HOLDER WITH KTK-½ FUSE
D2	1	FINGERSAFE FUSE HOLDER WITH KTK- 2A FUSE
E	1	2.0 KVA 277V-240/120 TRANSFORMER
E1	1	0.25 KVA 240/120-24 VAC TRANSFORMER
F	1	VOLTAGE TRANSDUCER
G	1	15 AMP GFCI DUPLEX OUTLET W/COVER
H	2	DOOR SWITCH A-20GQ-B7-K
I	1	LIGHT FIXTURE
J	1	METER FITTING 1 PHASE 3 WIRE 200 AMP
K	1	SURGE ARRESTER
L	2	PANEL BOARD 480/240V 1 PHASE, 250 AMP COPPER BUS
M	1	2 CHANNEL DIGITAL TIME CLOCK
N	1	MOMENTARY SWITCH ON - OFF
O	1	SQUARE D, 9001KS11BH13, 2 POSITION SWITCH IN 9001KY1 ENCLOSURE
P	2	BREAKER 1P 15A
Q	2	COPPER GROUND AND NEUTRAL BUS 1 x 16 x 1/4
Q1	1	COPPER NEUTRAL BUS WITH 1 1/0 AND *6 CONDUCTOR POINTS
R	1	CURRENT TRANSDUCER
S	1	MOTOROLA ACE 3600
T	1	CONTROL RELAY ASSEMBLEY 240V COILS WITH 4 3 PDT 25A RELAYS (W389ACX-15) (R1, R2, R3, R4) . QTY 32 TERMINAL BLOCKS
V	20	TERMINAL BLOCKS
X	1	620 AMP SLPICE BLOCK
Y	1	40-80 DEG THERMOSTAT
Z	1	375 WATT HEATER

*

FOR "MODIFY EXISTING CONTROLLER" PAY ITEM

ENGINEERING CONSULTANT
Clarke Group, Inc.
CONSULTING ENGINEERS
5507 North Cumberland Avenue, Suite 402
Chicago, Illinois 60656
Tel: 773.775.4300 Fax: 773.775.4314
Email: chicago@clarke-eng.com

USER NAME = leysa	DESIGNED -	REVISED - R. TOMSONS 08-19-04	
	DRAWN -	REVISED - R. TOMSONS 05-11-09	
PLOT SCALE = 50.000 ' / IN.	CHECKED -	REVISED - R. TOMSONS 03-10-10	
PLOT DATE = 3/30/2010	DATE -	REVISED -	

STATE OF ILLINOIS
DEPARTMENT OF TRANSPORTATION

LIGHTING CONTROLLER, RADIO CONTROL
DUPLEX TYPE WITH SCADA

SCALE: NONE | SHEET NO. 2 OF 4 SHEETS | STA. | TO STA.

F.A. RTE.	SECTION	COUNTY	TOTAL SHEETS	SHEET NO.
80	99-5-Y	WILL	277	172
	BE-205	CONTRACT NO. 60147		

FED. ROAD DIST. NO. 1 | ILLINOIS | FED. AID PROJECT

n:\proj\3384\2.west\design\ITS\3384W-Detail Surveillance09.dgn

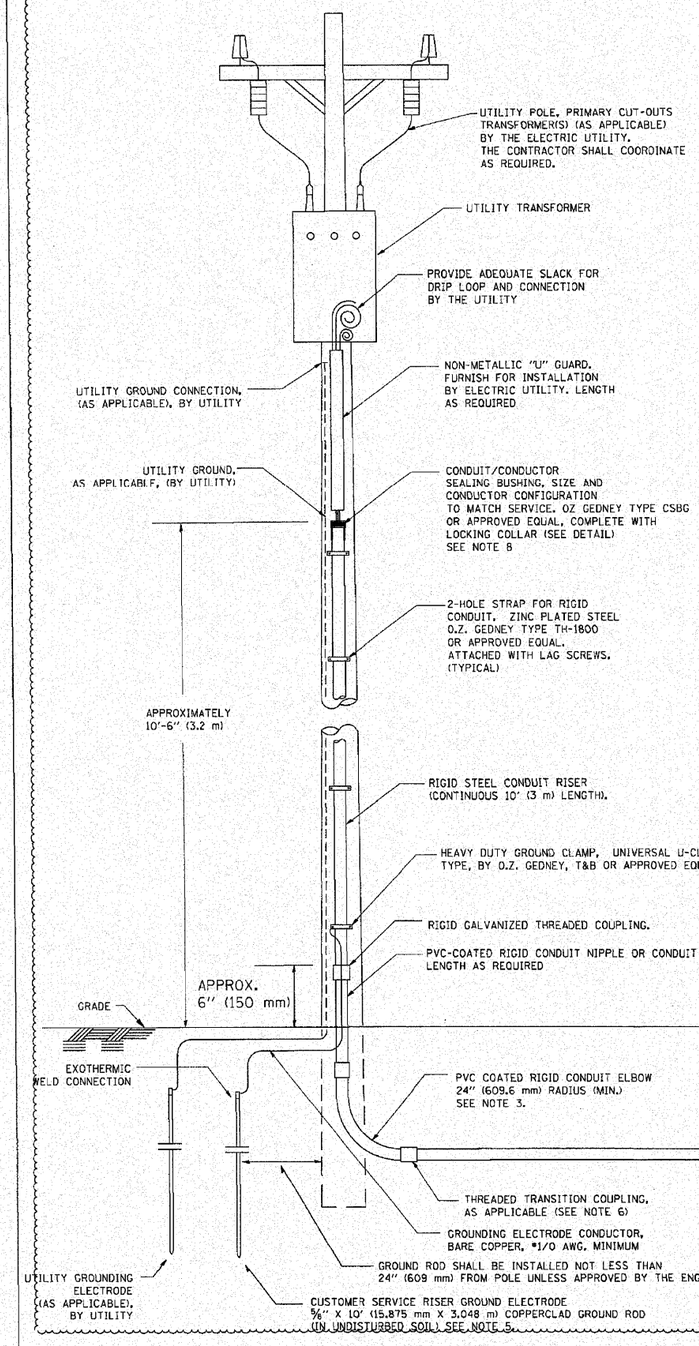

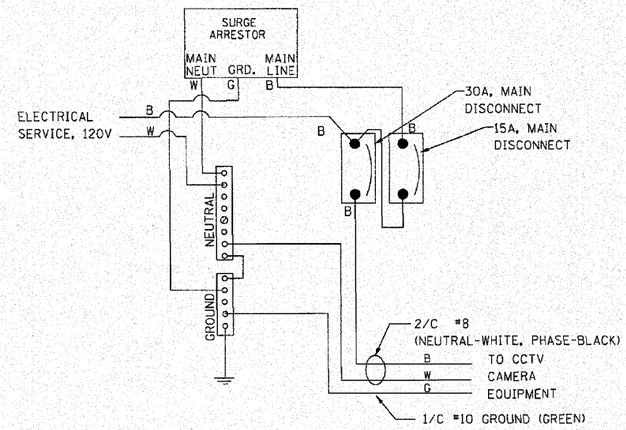

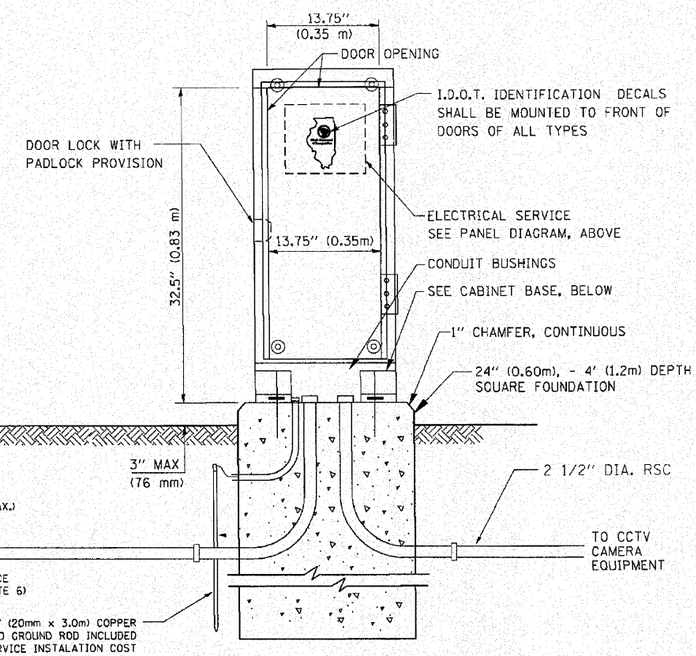

NOTES

1. SERVICE VOLTAGE SHALL BE AS INDICATED ELSEWHERE IN THE DRAWINGS.
2. UNLESS OTHERWISE INDICATED, ITEMS AND WORK SHALL BE INCLUDED AND PAID AS PART OF THE ELECTRIC UTILITY SERVICE INSTALLATION PAY ITEM.
3. CONDUIT AND CONNECTOR DIAMETER SHALL MATCH THE DIAMETER OF THE SERVICE CONDUCTOR RACEWAY AS INDICATED ON THE PLANS.
4. PVC COATED RACEWAYS AND ACCESSORIES SHALL BE CAREFULLY INSTALLED WITH MFR RECOMMENDED TOOLS AND PROCEDURES TO AVOID DAMAGE. ANY DAMAGE SHALL BE REPAIRED WITH COMPATIBLE PVC TOUCH-UP MATERIAL TO THE SATISFACTION OF THE ENGINEER OR THE DAMAGED MATERIAL SHALL BE REPLACED AT NO ADDITIONAL COST.
5. THE CONTRACTOR SHALL OBTAIN INSPECTION AND APPROVAL BY THE ENGINEER OF SERVICE RISER GROUND ELECTRODE, RISER ELBOW, NIPPLE AND CONNECTION TO SERVICE CONDUCTOR RACEWAY EXTENSION BEFORE BACKFILL AND SHALL ALSO OBTAIN INSPECTION OF SERVICE RISER AND SEALING BUSHING BEFORE UTILITY "U" GUARD INSTALLATION AND SERVICE CONNECTION.
6. THE HORIZONTAL ELECTRIC SERVICE CONDUCTOR RACEWAY SHALL BE AS INDICATED AND SHALL BE MEASURED SEPARATELY FOR PAYMENT. WHEN THE RACEWAY IS PVC-COATED RIGID GALVANIZED STEEL, THE COUPLING SHALL BE THE SAME. WHEN THE RACEWAY IS PVC CONDUIT (IN CONCRETE), THE COUPLING SHALL BE A METALIC TO NON METALIC ADAPTER. WHEN THE RACEWAY IS ENCASED IN CONCRETE, THE CONCRETE SHALL EXTEND TO COVER THE COUPLING.
7. PLANS AND DETAILS INDICATE THE GENERAL NATURE AND REQUIREMENTS. THEY DO NOT SHOW EVERY ACCESSORY AND ATTACHMENT, AND THEY DO NOT RELIEVE THE CONTRACTOR OF THE REQUIREMENTS OF THE SPECIFICATIONS AND SPECIAL PROVISIONS TO ASCERTAIN UTILITY REQUIREMENTS AND TO COORDINATE ACCORDINGLY. FURNISHING ALL ITEMS AND WORK NOT PROVIDED BY THE UTILITY, BUT NECESSARY FOR A COMPLETE SERVICE INSTALLATION IS REQUIRED AND SHALL BE INCLUDED IN THE ELECTRIC UTILITY SERVICE INSTALLATION PAY ITEM.
8. THE CONTRACTOR SHALL SCHEDULE THE WORK SUCH THAT THE ENGINEER SAHLL WITNESS THE INSTALLATION OF THE RISER SEALING BUSHING AND GROUND ROD EXOTHERMIC WELDS. THE CONTRACTOR SHALL OBTAIN A CERTIFICATION SIGNED BY THE ENGINEER THAT THIS WORK WAS WITNESSED.

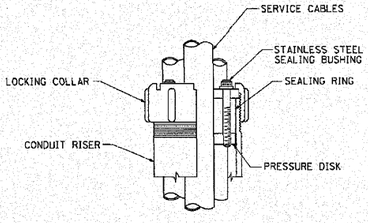

SEALING BUSHING DETAIL

ENGINEERING CONSULTANT Clarke Group, Inc. CONSULTING ENGINEERS 6507 North Cumberland Avenue, Suite 402 Chicago, Illinois 60656 Phone: 773.775.8000 Fax: 773.775.4014 Email: clarke@clarkeinc.com	USER NAME = tomsonsra	DESIGNED -	REVISED 1 ADDENDUM	STATE OF ILLINOIS DEPARTMENT OF TRANSPORTATION	ELECTRIC SERVICE INSTALLATION SERVICE INSTALLATION - GROUND MOUNTED	F.A. RTE.	SECTION	COUNTY	TOTAL SHEETS	SHEET NO.
	...t5Std.dgn	DRAWN -	REVISED -			80	99-5-Y	WILL	277	173
	PLOT SCALE = 50.0000 ' / IN.	CHECKED - MEA	REVISED -				BE-240	CONTRACT NO. 60147		
	PLOT DATE = 5/13/2009	DATE -	REVISED -		SCALE: NONE / SHEET NO. 1 OF 1 SHEETS / STA. TO STA.	FED. ROAD DIST. NO. 1	ILLINOIS	FED. AID PROJECT		

n:\proj\338412_west\design\ITS\338414-Detail_Surveillance18.dgn

Sht 174 not USED

LIGHT POLE FOUNDATION DEPTH TABLE
30 FT. (9.144 m) TO 35 FT. (10.668 m) MOUNTING HEIGHT

SOIL CONDITIONS	DESIGN DEPTH "D" OF FOUNDATION	
	SINGLE ARM POLE	TWIN ARM POLE
SOFT CLAY Qu = 0.375 TON/SQ. FT.	11'-0" (3.35 m)	12'-8" (3.85 m)
MEDIUM CLAY Qu = 0.75 TON/SQ.FT	9'-0" (2.74 m)	14'-10" (4.52 m)
STIFF CLAY Qu = 1.50 TON/SQ. FT.	7'-6" (2.29 m)	8'-7" (2.61 m)
LOOSE SAND Ø = 34°	9'-6" (2.90 m)	10'-7" (3.22 m)
MEDIUM SAND Ø = 37.5°	9'-0" (2.74 m)	9'-10" (2.99 m)
DENSE SAND Ø = 40°	8'-3" (2.51 m)	9'-7" (2.91 m)

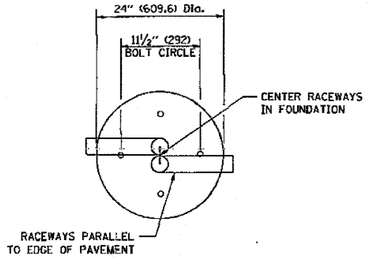

TOP VIEW

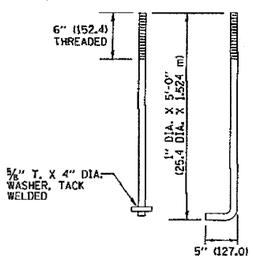

ANCHOR BOLT DETAIL

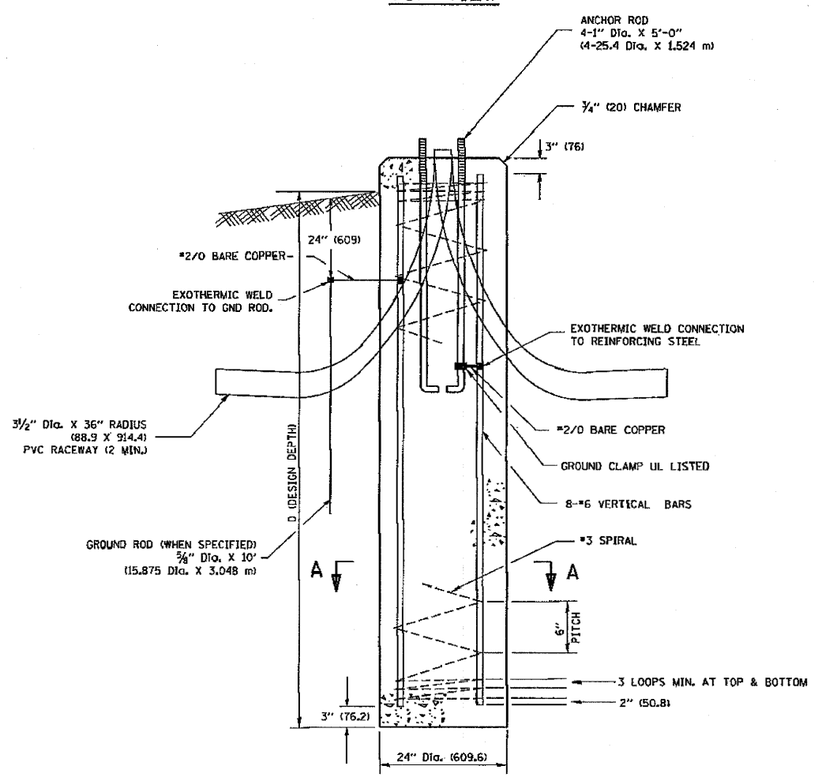

FOUNDATION DETAIL

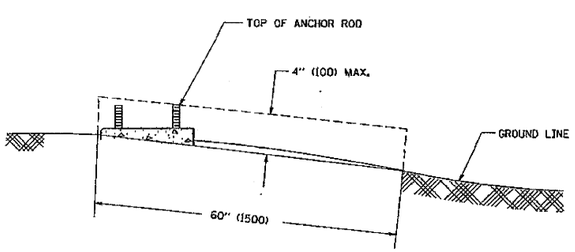

FOUNDATION EXTENSION DETAIL

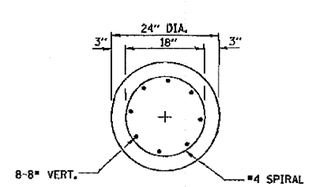

SECTION A-A

NOTES

1. ALL DIMENSIONS ARE IN INCHES (MILLIMETERS) UNLESS OTHERWISE SHOWN.
2. THE ANCHOR RODS AND RACEWAYS SHALL BE PROPERLY SECURED IN PLACE BEFORE THE CONCRETE IN PLACED.
3. THE FOUNDATION SHALL NOT PROTRUDE MORE THAN 4 IN. (100 mm) ABOVE THE FINISHED GRADE WITHIN A 60 IN. (1.5 m) CHORD ACROSS THE FOUNDATION, WITH ANCHOR RODS INCLUDED. IN ACCORDANCE WITH AASHTO GUIDELINES. IF THE FOUNDATION HEIGHT, INCLUDING ANCHOR RODS, EXTENDS BEYOND THESE SPECIFIED LIMITS, THE FOUNDATION SHALL BE REPLACED AT THE CONTRACTOR'S EXPENSE. SEE FOUNDATION EXTENSION DETAIL.
4. THE HOLE FOR THE FOUNDATION SHALL BE MADE BY DRILLING WITH AN AUGER, OF THE SAME DIAMETER AS THE FOUNDATION. IF SOIL CONDITIONS REQUIRE THE USE OF A LINER TO FORM THE HOLE, THE LINER SHALL BE WITHDRAWN AS THE CONCRETE IS DEPOSITED.
5. THE TOP OF THE FOUNDATION SHALL BE CONSTRUCTED LEVEL. A LINER OR FORM SHALL BE USED TO PRODUCE A UNIFORM SMOOTH SIDE TO THE TOP OF THE FOUNDATION. FOUNDATION TOP SHALL BE CHAMFERED ¾-IN. (20 mm).
6. THE CONCRETE SHALL BE CLASS SI. CONCRETE SHALL CURE ACCORDING TO ARTICLE 1020.13 BEFORE LIGHT POLES ARE INSTALLED.
7. THE ANCHOR ROD SHALL BE A HOOK ROD TYPE. COLD BENDING OF THE ANCHOR ROD WILL NOT BE ALLOWED. THE RADIUS OF THE HOOK BEND SHALL NOT BE LESS THAN 4 TIMES THE NOMINAL DIAMETER OF THE ANCHOR ROD. A TACK WELDED ANCHOR ROD MAY BE SUBSTITUTED WITH THE APPROVAL OF THE ENGINEER.
8. THE ANCHOR RODS SHALL BE ACCORDING TO ASTM F1554 GRADE 725 (GRADE 105). NUTS SHALL BE HEXAGON NUTS ACCORDING TO ASTM A 194 2H OR ASTM A 563 DH, AND WASHERS SHALL BE ACCORDING TO ASTM F 436.
9. ANCHOR RODS, NUTS AND WASHERS SHALL BE COMPLETELY GALVANIZED BY EITHER THE HOT-DIPPED PROCESS CONFORMING WITH AASHTO M 232, THE MECHANICAL PLATING METHOD CONFORMING TO AASHTO M 298, CLASS 50 WITH A MAXIMUM COATING THICKNESS OF 150 UM(6 MILS) OR THE ELECTROLYTIC PROCESS ACCORDING TO ASTM F 1136.
10. THE ANCHOR RODS SHALL BE THREADED A MINIMUM OF 6 INCHES (150 mm) WITH A MINIMUM OF 3 INCHES (75 mm) OF THREADED ANCHOR ROD EMBEDDED IN THE FOUNDATION.
11. ANCHOR RODS SHALL PROJECT 2¾" (69.9 mm) ABOVE THE TOP OF THE FOUNDATION. IF BREAKAWAY COUPLINGS ARE SPECIFIED, THE CONTRACTOR SHALL CAREFULLY COORDINATE THE ANCHOR ROD PROJECTION WITH THE INSTALLATION REQUIREMENTS OF THE BREAKAWAY COUPLINGS.
12. THE CONTRACTOR SHALL USE A #3 SPIRAL AT 6" (152.4 mm) PITCH OR MAY SUBSTITUTE #3 TIES AT 12" (304.8 mm) O.C. WITH THE APPROVAL OF THE ENGINEER.
13. THE CABLE TRENCHES AND FOUNDATION SHALL BE BACK FILLED AND COMPACTED AS SPECIFIED BEFORE THE LIGHT POLE IS ERECTED.
14. THE RACEWAYS SHALL PROJECT 1" (25.4 mm) ABOVE THE TOP OF THE FOUNDATION.

ENGINEERING CONSULTANT
Clarke Group, Inc.
CONSULTING ENGINEERS
5507 North Cumberland Avenue, Suite 402
Chicago, Illinois 60656
Tel 773.775.6000 Fax 773.775.6014
Email chicago@clarke.com

USER NAME = gaglianobt	DESIGNED -	REVISED -	
	DRAWN -	REVISED -	
PLOT SCALE = 50.0000 ' / IN.	CHECKED -	REVISED -	
PLOT DATE = 1/4/2008	DATE -	REVISED -	

STATE OF ILLINOIS
DEPARTMENT OF TRANSPORTATION

LIGHT POLE FOUNDATION
30' (9.144 m) TO 35' (10.668 m) M.H. 11 1/2" (292 mm) BOLT CIRCLE

SCALE: NONE | SHEET NO. 1 OF 1 SHEETS | STA. | TO STA.

F.A.I. RTE.	SECTION	COUNTY	TOTAL SHEETS	SHEET NO.
80	99-5-Y	WILL	277	174a
	BE-300	CONTRACT NO. 60147		
FED. ROAD DIST. NO. 1	ILLINOIS	FED. AID PROJECT		

LIGHT POLE FOUNDATION DEPTH TABLE
40 FT. (12.192 m) TO 47.5 FT. (14.478 m) MOUNTING HEIGHT

SOIL CONDITIONS	DESIGN DEPTH "D" OF FOUNDATION	
	SINGLE ARM POLE	TWIN ARM POLE
SOFT CLAY Qu = 0.375 TON/SQ. FT.	13'-0" (3.96 m)	15'-0" (4.57 m)
MEDIUM CLAY Qu = 0.75 TON/SQ.FT	9'-6" (2.09 m)	10'-9" (3.23 m)
STIFF CLAY Qu = 1.50 TON/SQ. FT.	7'-0" (2.13 m)	8'-0" (2.44 m)
LOOSE SAND ø = 34°	9'-0" (2.74 m)	10'-0" (3.05 m)
MEDIUM SAND ø = 37.5°	8'-3" (2.52 m)	9'-0" (2.74 m)
DENSE SAND ø = 40°	7'-9" (2.36 m)	9'-0" (2.74 m)

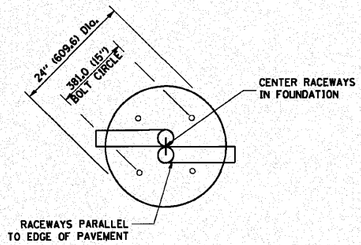

TOP VIEW

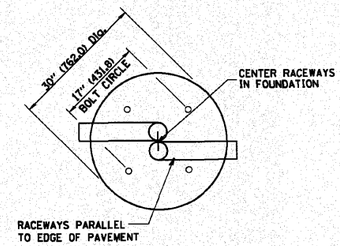

TOP VIEW

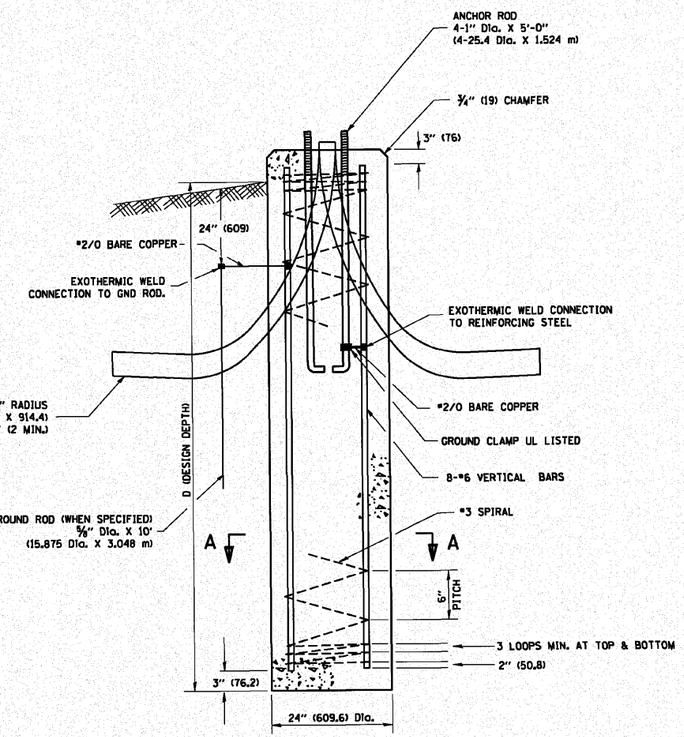

FOUNDATION DETAIL

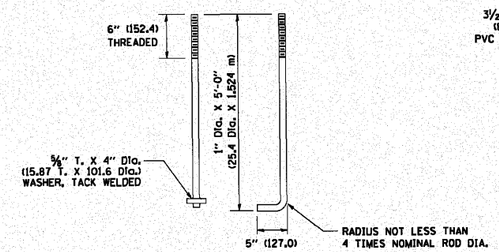

ANCHOR ROD DETAIL

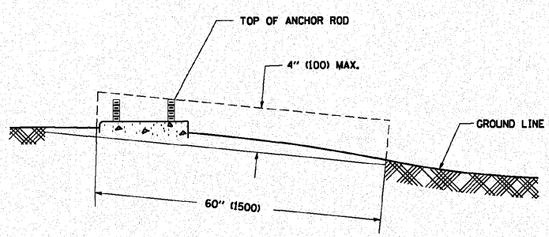

FOUNDATION EXTENSION DETAIL

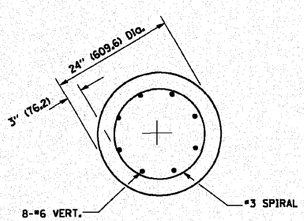

SECTION A-A

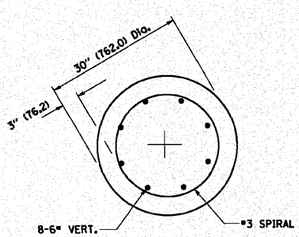

SECTION A-A

NOTES

1. ALL DIMENSIONS ARE IN INCHES (MILLIMETERS) UNLESS OTHERWISE SHOWN.
2. THE ANCHOR RODS AND RACEWAYS SHALL BE PROPERLY SECURED IN PLACE BEFORE THE CONCRETE IN PLACED.
3. THE FOUNDATION SHALL NOT PROTRUDE MORE THAN 100MM (4 IN.) ABOVE THE FINISHED GRADE WITHIN A 60 IN. (1.5 m) CHORD ACROSS THE FOUNDATION, WITH ANCHOR RODS INCLUDED, IN ACCORDANCE WITH AASHTO GUIDELINES. IF THE FOUNDATION HEIGHT, INCLUDING ANCHOR RODS, EXTENDS BEYOND THESE SPECIFIED LIMITS, THE FOUNDATION SHALL BE REPLACED AT THE CONTRACTOR'S EXPENSE. SEE FOUNDATION EXTENSION DETAIL.
4. THE HOLE FOR THE FOUNDATION SHALL BE MADE BY DRILLING WITH AN AUGER, OF THE SAME DIAMETER AS THE FOUNDATION. IF SOIL CONDITIONS REQUIRE THE USE OF A LINER TO FORM THE HOLE, THE LINER SHALL BE WITHDRAWN AS THE CONCRETE IS DEPOSITED.
5. THE TOP OF THE FOUNDATION SHALL BE CONSTRUCTED LEVEL. A LINER OR FORM SHALL BE USED TO PRODUCE A UNIFORM SMOOTH SIDE TO THE TOP OF THE FOUNDATION. FOUNDATION TOP SHALL BE CHAMFERED 3/4-IN. (20 mm).
6. THE CONCRETE SHALL BE CLASS SI. CONCRETE SHALL CURE ACCORDING TO ARTICLE 1020.13 BEFORE LIGHT POLES ARE INSTALLED.
7. THE ANCHOR ROD SHALL BE A HOOK ROD TYPE. COLD BENDING OF THE ANCHOR ROD WILL NOT BE ALLOWED. THE RADIUS OF THE HOOK BEND SHALL NOT BE LESS THAN 4 TIMES THE NOMINAL DIAMETER OF THE ANCHOR ROD. A TACK WELDED ANCHOR ROD MAY BE SUBSTITUTED WITH THE APPROVAL OF THE ENGINEER.
8. THE ANCHOR RODS SHALL BE ACCORDING TO ASTM F1554 GRADE 725 (GRADE 105). NUTS SHALL BE HEXAGON NUTS ACCORDING TO ASTM A 194 2H OR ASTM A 563 DH, AND WASHERS SHALL BE ACCORDING TO ASTM F 436.
9. ANCHOR RODS, NUTS AND WASHERS SHALL BE COMPLETELY GALVANIZED BY EITHER THE HOT-DIPPED PROCESS CONFORMING WITH AASHTO M 232, THE MECHANICAL PLATING METHOD CONFORMING TO AASHTO M 298, CLASS 50 WITH A MAXIMUM COATING THICKNESS OF 150 UM(6 MILS) OR THE ELECTROLYTIC PROCESS ACCORDING TO ASTM F 1136.
10. THE ANCHOR RODS SHALL BE THREADED A MINIMUM OF 6 INCHES (150 mm) WITH A MINIMUM OF 3 INCHES (75 mm) OF THREADED ANCHOR ROD EMBEDDED IN THE FOUNDATION.
11. ANCHOR RODS SHALL PROJECT 2 3/4" (69.9 mm) ABOVE THE TOP OF THE FOUNDATION. IF BREAKAWAY COUPLINGS ARE SPECIFIED, THE CONTRACTOR SHALL CAREFULLY COORDINATE THE ANCHOR ROD PROJECTION WITH THE INSTALLATION REQUIREMENTS OF THE BREAKAWAY COUPLINGS.
12. THE CONTRACTOR SHALL USE A #3 SPIRAL AT 6" (152.4 mm) PITCH OR MAY SUBSTITUTE #3 TIES AT 12" (304.8 mm) O.C. WITH THE APPROVAL OF THE ENGINEER.
13. THE CABLE TRENCHES AND FOUNDATION SHALL BE BACK FILLED AND COMPACTED AS SPECIFIED BEFORE THE LIGHT POLE IS ERECTED.
14. THE RACEWAYS SHALL PROJECT 1" (25.4 mm) ABOVE THE TOP OF THE FOUNDATION.

ENGINEERING CONSULTANT
Cierba Group, Inc.
CONSULTING ENGINEERS
5527 North Cumberland Avenue, Suite 402
Chicago, Illinois 60656
Tel 773.775.4006 Fax 773.775.4014
Email chicago@cierba.com

USER NAME = gaglionobt	DESIGNED -	REVISED - 04-22-02	
	DRAWN -	REVISED -	
PLOT SCALE = 50.0000 ' / IN.	CHECKED -	REVISED -	
PLOT DATE = 1/4/2008	DATE -	REVISED -	

STATE OF ILLINOIS
DEPARTMENT OF TRANSPORTATION

LIGHT POLE FOUNDATION
40' (12.192 m) TO 47 1/2' (14.478 m) M.H. 15" (381 mm) BOLT CIRCLE

SCALE: NONE | SHEET NO. 1 OF 1 SHEETS | STA. | TO STA.

F.A.I. RTE.	SECTION	COUNTY	TOTAL SHEETS	SHEET NO.
80	99-5-Y	WILL	277	174b
	BE-301	CONTRACT NO. 60147		
FED. ROAD DIST. NO. 1	ILLINOIS	FED. AID PROJECT		

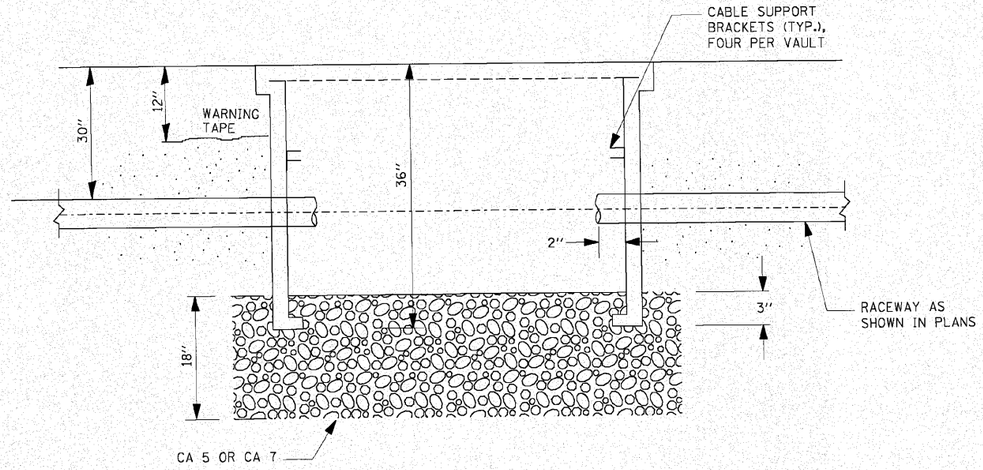

SECTION A-A

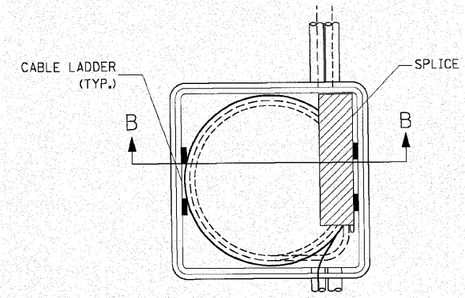

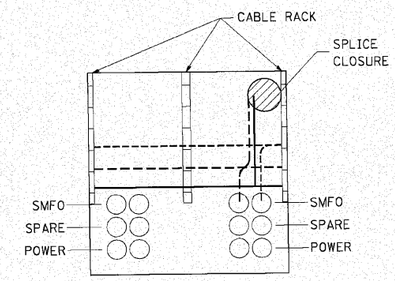

SECTION B-B

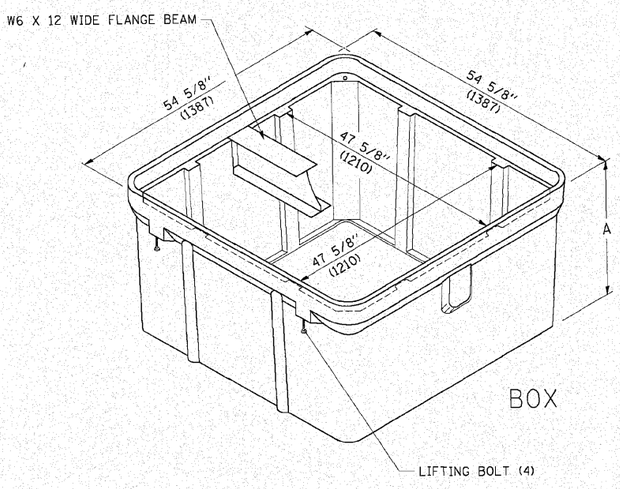

BOX

ISOMETRIC

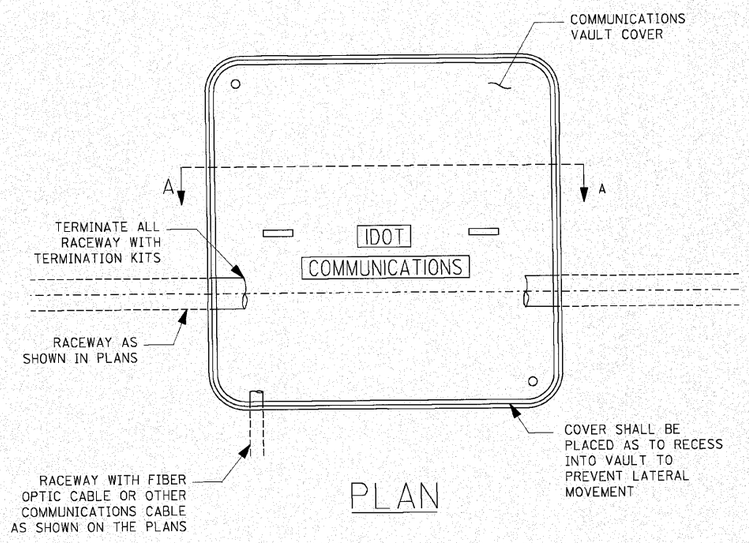

PLAN

NOTES:

1. BOX SHALL HAVE AN OPEN BASE.
2. COVER SHALL WITHSTAND A 22,500/33,750 DESIGN/TEST LOADING AND SHALL LOCK.
3. ALL OPENINGS IN STRUCTURE MUST BE MACHINED AT TIME OF FABRICATION OR PUNCH DRIVEN AT TIME OF PLACEMENT. IN ACCORDANCE WITH MANUFACTURER RECOMMENDATIONS.
4. FIELD PLACEMENT OF COMMUNICATIONS VAULT SHALL BE AS DIRECTED BY THE ENGINEER.
5. ALL DIMENSIONS ARE MINIMUM AND A LARGER SIZE HANDHOLE MAY BE USED, WITH THE APPROVAL OF THE ENGINEER, TO FACILITATE USING A MANUFACTURER'S STANDARD PRODUCT.

ENGINEERING CONSULTANT
Clarke Group, Inc.
CONSULTING ENGINEERS
5807 North Cumberland Avenue, Suite 402
Chicago, Illinois 60631
Tel. 773.775.4294 Fax 773.775.4314
Email: clarke@clarke.com

USER NAME = layse	DESIGNED -	REVISED -	
	DRAWN -	REVISED -	
PLOT SCALE = 50.0000 ' / IN.	CHECKED -	REVISED -	
PLOT DATE = 3/29/2010	DATE - 03-22-10	REVISED -	

STATE OF ILLINOIS
DEPARTMENT OF TRANSPORTATION

COMMUNICATIONS VAULT, COMPOSITE CONCRETE

SCALE: NONE | SHEET NO. OF SHEETS | STA. TO STA.

F.A.I RTE.	SECTION	COUNTY	TOTAL SHEETS	SHEET NO.
80	99-5-Y	WILL	277	175
	BE-705	CONTRACT NO. 60147		
FED. ROAD DIST. NO. 1	ILLINOIS	FED. AID PROJECT		

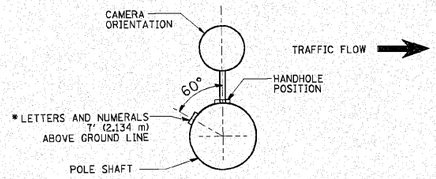

POSITION OF HANDHOLE AND CAMERA NUMBER FOR POLE MOUNTED ON BRIDGE PARAPET OR BARRIER WALL

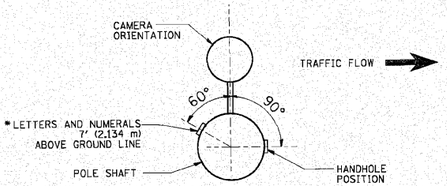

POSITION OF HANDHOLE AND CAMERA NUMBER

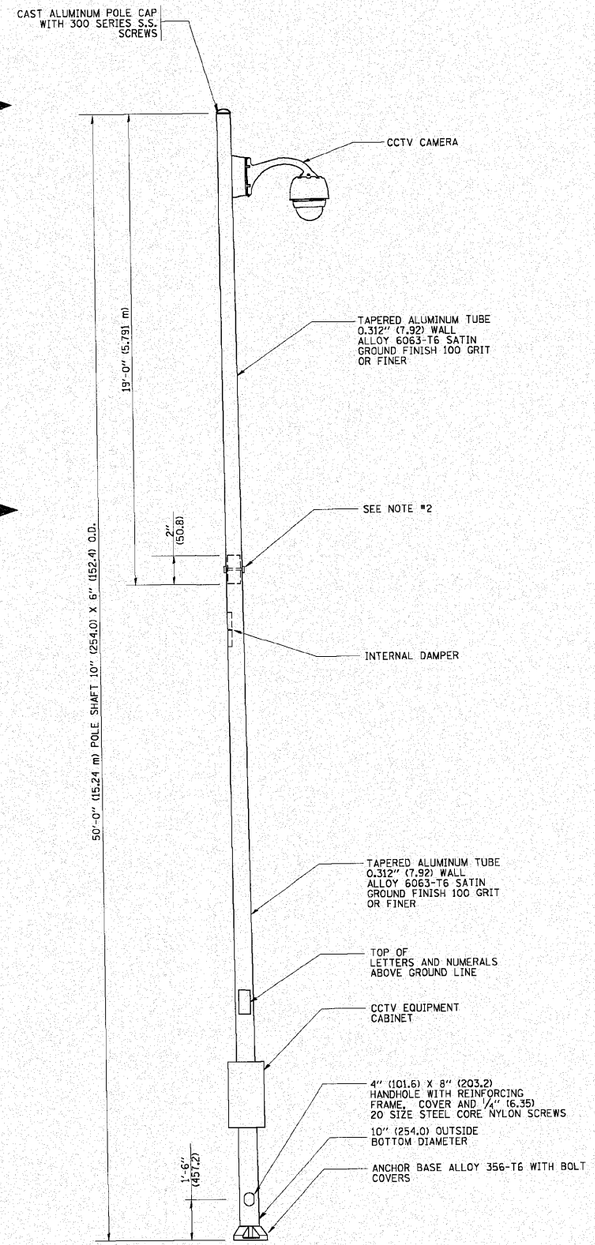

NOTES:

1. ALL DIMENSIONS ARE IN INCHES (MILLIMETERS) UNLESS OTHERWISE SHOWN.
2. TWO PIECE SHAFT WILL BE MATCHED MARKED AND INTERCHANGEABLE BETWEEN DIFFERENT UNITS. FIELD DRILLING OF THE HOLES WILL NOT BE ALLOWED.
3. THE POLE WILL MEET AASHTO DESIGN CRITERIA AS SPECIFIED.
4. THE INSTALLING CONTRACTOR WILL PROVIDE A UL LISTED GROUNDING CONNECTOR. BURNDY K2C23, T&B SP4DL OR APPROVED EQUAL.
5. POLES WILL BE INSTALLED IN ACCORDANCE TO MANUFACTURER'S INSTRUCTIONS.
6. POLES WILL BE SET PLUMB ON THE FOUNDATION WITHOUT THE USE OF LEVELING NUTS, WASHERS OR SHIMS.

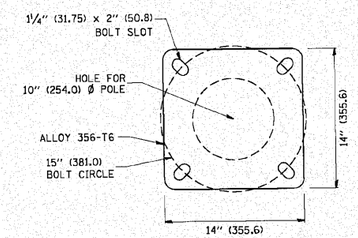

POLE BASE PLATE DETAIL

15 INCH (381.0) BOLT CIRCLE

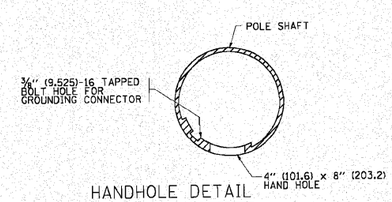

HANDHOLE DETAIL

(N.T.S.)

ENGINEERING CONSULTANT Ciorba Group, Inc. CONSULTING ENGINEERS 2507 North Clybourn Avenue, Suite 400 Chicago, Illinois 60614 Ph 773.770.9100 Fax 773.770.4014 Email chicago@ciorba.com	USER NAME = lsyso	DESIGNED -	REVISED - R. TOMSONS 09-06-00	STATE OF ILLINOIS DEPARTMENT OF TRANSPORTATION	CCTV CAMERA STRUCTURE 50' (15.24 m) MOUNTING HEIGHT	F.A.I. RTE.	SECTION	COUNTY	TOTAL SHEETS	SHEET NO.
	dgn	DRAWN -	REVISED - R. TOMSONS 09-03-03			80	99-5-Y	WILL	277	176
	PLOT SCALE = 50.000 ' / IN.	CHECKED -	REVISED -			BE-1000		CONTRACT NO. 60147		
	PLOT DATE = 4/12/2010	DATE -	REVISED -		SCALE: NONE / SHEET NO. 1 OF 1 SHEETS / STA. / TO STA.	FED. ROAD DIST. NO. 1	ILLINOIS	FED. AID PROJECT		

TRUNK CABLE FIBER ASSIGNMENTS

TRUNK CABLE DESIGNATION: TCF-IE-06

ORIGINATION: W/O TSC CABINET 55

DESTINATION: E/O TSC CABINET 41

BUFFER TUBE	FIBER		FIBER NO	ASSIGNMENT
BLUE	Blue	1	1	
	Orange	2	2	
	Green	3	3	
	Brown	4	4	
	Slate	5	5	
	White	6	6	
	Red	7	7	
	Black	8	8	
	Yellow	9	9	
	Violet	10	10	
	Rose	11	11	
	Aqua	12	12	
ORANGE	Blue	1	13	
	Orange	2	14	
	Green	3	15	
	Brown	4	16	
	Slate	5	17	
	White	6	18	
	Red	7	19	
	Black	8	20	
	Yellow	9	21	
	Violet	10	22	
	Rose	11	23	
	Aqua	12	24	
GREEN	Blue	1	25	
	Orange	2	26	
	Green	3	27	
	Brown	4	28	
	Slate	5	29	
	White	6	30	
	Red	7	31	
	Black	8	32	
	Yellow	9	33	
	Violet	10	34	
	Rose	11	35	
	Aqua	12	36	
BROWN	Blue	1	37	
	Orange	2	38	
	Green	3	39	
	Brown	4	40	
	Slate	5	41	
	White	6	42	
	Red	7	43	
	Black	8	44	
	Yellow	9	45	
	Violet	10	46	
	Rose	11	47	
	Aqua	12	48	

BUFFER TUBE	FIBER NO		FIBER NO	ASSIGNMENT
SLATE	Blue	1	49	
	Orange	2	50	
	Green	3	51	
	Brown	4	52	
	Slate	5	53	
	White	6	54	
	Red	7	55	
	Black	8	56	
	Yellow	9	57	
	Violet	10	58	
	Rose	11	59	
	Aqua	12	60	
WHITE	Blue	1	61	
	Orange	2	62	
	Green	3	63	
	Brown	4	64	
	Slate	5	65	
	White	6	66	
	Red	7	67	
	Black	8	68	
	Yellow	9	69	
	Violet	10	70	
	Rose	11	71	
	Aqua	12	72	
RED	Blue	1	73	
	Orange	2	74	
	Green	3	75	
	Brown	4	76	
	Slate	5	77	
	White	6	78	
	Red	7	79	
	Black	8	80	
	Yellow	9	81	
	Violet	10	82	
	Rose	11	83	
	Aqua	12	84	
BLACK	Blue	1	85	
	Orange	2	86	
	Green	3	87	
	Brown	4	88	
	Slate	5	89	
	White	6	90	
	Red	7	91	
	Black	8	92	
	Yellow	9	93	
	Violet	10	94	
	Rose	11	95	
	Aqua	12	96	

DISTRIBUTION CABLE FIBER ASSIGNMENTS				ORIGINATION	W/O TSC CABINET 55		
DISTRIBUTION CABLE DESIGNATION	DCF-IE-06			DESTINATION	E/O TSC CABINET 41		
BUFFER TUBE	FIBER	FIBER NO	ASSIGNMENT	BUFFER TUBE	FIBER NO	FIBER NO	ASSIGNMENT
BLUE	Blue 1	1		SLATE	Blue 1	49	
	Orange 2	2			Orange 2	50	
	Green 3	3			Green 3	51	
	Brown 4	4			Brown 4	52	
	Slate 5	5			Slate 5	53	
	White 6	6			White 6	54	
	Red 7	7			Red 7	55	
	Black 8	8			Black 8	56	
	Yellow 9	9			Yellow 9	57	
	Violet 10	10			Violet 10	58	
	Rose 11	11			Rose 11	59	
	Aqua 12	12			Aqua 12	60	
ORANGE	Blue 1	13		WHITE	Blue 1	61	
	Orange 2	14			Orange 2	62	
	Green 3	15			Green 3	63	
	Brown 4	16			Brown 4	64	
	Slate 5	17			Slate 5	65	
	'White 6	18			White 6	66	
	Red 7	19			Red 7	67	
	Black 8	20			Black 8	68	
	Yellow 9	21			Yellow 9	69	
	Violet 10	22			Violet 10	70	
	Rose 11	23			Rose 11	71	
	Aqua 12	24			Aqua 12	72	
GREEN	Blue 1	25		RED	Blue 1	73	
	Orange 2	26			Orange 2	74	
	Green 3	27			Green 3	75	
	Brown 4	28			Brown 4	76	
	Slate 5	29			Slate 5	77	
	White 6	30			White 6	78	
	Red 7	31			Red 7	79	
	Black 8	32			Black 8	80	
	Yellow 9	33			Yellow 9	81	
	Violet 10	34			Violet 10	82	
	Rose 11	35			Rose 11	83	
	Aqua 12	36			Aqua 12	84	
BROWN	Blue 1	37		BLACK	Blue 1	85	
	Orange 2	38			Orange 2	86	
	Green 3	39			Green 3	87	
	Brown 4	40			Brown 4	88	
	Slate 5	41			Slate 5	89	
	White 6	42			White 6	90	
	Red 7	43			Red 7	91	
	Black 8	44			Black 8	92	
	Yellow 9	45			Yellow 9	93	
	Violet 10	46			Violet 10	94	
	Rose 11	47			Rose 11	95	
	Aqua 12	48			Aqua 12	96	

LATERAL CABLE FIBER ASSIGNMENTS

LCF-IE-06a TSC CABINET 41

FIBER NO	FUNCTION	CONNECTION
1		DCF-IE-06-
2		
3		
4		
5		
6		
7		
8		
9		
10		
11		
12		

LATERAL CABLE FIBER ASSIGNMENTS

LCF-IE-06b CCTV CAMERA IE22

FIBER NO	FUNCTION	CONNECTION
1	CCTV IE22	DCF-IE-06-
2		
3		
4		
5		
6		
7		
8		
9		
10		
11		
12		

LATERAL CABLE FIBER ASSIGNMENTS

LCF-IE-06c TSC CABINET 43

FIBER NO	FUNCTION	CONNECTION
1		
2		
3		
4		
5		
6		
7		
8		
9		
10		
11		
12		

LATERAL CABLE FIBER ASSIGNMENTS

LCF-IE-06d TSC CABINET 45

FIBER NO	FUNCTION	CONNECTION
1		
2		
3		
4		
5		
6		
7		
8		
9		
10		
11		
12		

LATERAL CABLE FIBER ASSIGNMENTS		
LCF-IE-06e	CCTV CAMERA IE23	
FIBER NO	FUNCTION	CONNECTION
1	CCTV CAMERA IE23	DCF-IE-06-
2		
3		
4		
5		
6		
7		
8		
9		
10		
11		
12		

LATERAL CABLE FIBER ASSIGNMENTS		
LCF-IE-06f	TSC CABINET 47	
FIBER NO	FUNCTION	CONNECTION
1		
2		
3		
4		
5		
6		
7		
8		
9		
10		
11		
12		

LATERAL CABLE FIBER ASSIGNMENTS		
LCF-IE-06g	TSC CABINET 49	
FIBER NO	FUNCTION	CONNECTION
1		
2		
3		
4		
5		
6		
7		
8		
9		
10		
11		
12		

LATERAL CABLE FIBER ASSIGNMENTS		
LCF-IE-06h	CCTV CAMERA IE23A	
FIBER NO	FUNCTION	CONNECTION
1	CCTV CAMERA IE23A	DCF-IE-06-
2		
3		
4		
5		
6		
7		
8		
9		
10		
11		
12		

LATERAL CABLE FIBER ASSIGNMENTS

LCF-IE-06i TSC CABINET 51

FIBER NO	FUNCTION	CONNECTION
1		
2		
3		
4		
5		
6		
7		
8		
9		
10		
11		
12		

LATERAL CABLE FIBER ASSIGNMENTS

LCF-IE-06k CCTV CAMERA IE24, TSC CABINET 55

FIBER NO	FUNCTION	CONNECTION
1	CCTV CAMERA IE24	DCF-IE-06
2		
3		
4		
5		
6		
7		
8		
9		
10		
11		
12		

LATERAL CABLE FIBER ASSIGNMENTS

LCF-IE-06j TSC CABINET 53

FIBER NO	FUNCTION	CONNECTION
1		
2		
3		
4		
5		
6		
7		
8		
9		
10		
11		
12		

LATERAL CABLE FIBER ASSIGNMENTS

LCF-

FIBER NO	FUNCTION	CONNECTION
1		
2		
3		
4		
5		
6		
7		
8		
9		
10		
11		
12		

NOTES:

1. ALL DIMENSIONS ARE IN INCHES (MILLIMETERS) UNLESS OTHERWISE SHOWN.
2. THE ANCHOR BOLTS AND RACEWAYS SHALL BE PROPERLY SECURED IN PLACE BEFORE THE CONCRETE IS PLACED IN THE FORMS.
3. THE CONTRACTOR AT HIS OPTION MAY SUBSTITUTE #4 (15 m) TIES AT 12" (304.8 m) CTRS. FOR THE #3 (3 m) SPIRAL. TACKWELDED TYPE BOLT MAY BE SUBSTITUTED FOR THE HOOK TYPE BOLT.
4. COLD BENDING OF THE HOOK BOLT SHALL NOT BE ALLOWED.
5. EXCAVATION FOR THE POLE FOUNDATION SHALL BE MADE WITH AN AUGER 24 INCHES (609.6 m) IN DIAMETER.
6. THE ENGINEER SHALL DETERMINE THE TYPE OF SOIL DURING EXCAVATION AND SELECT THE DESIGN DEPTH OF FOUNDATION FROM THE DESIGN TABLE USING THE DOMINANT CHARACTERISTIC OF THE SOIL ENCOUNTERED.
7. BARRIER WALL EXPANSION AND CONSTRUCTION JOINTS SHALL BE IN ACCORDANCE WITH STANDARD DETAIL 637001-02 AND 637006 AS APPLICABLE.

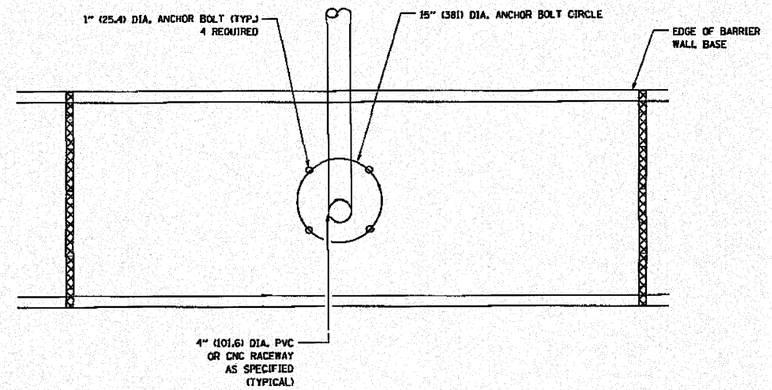

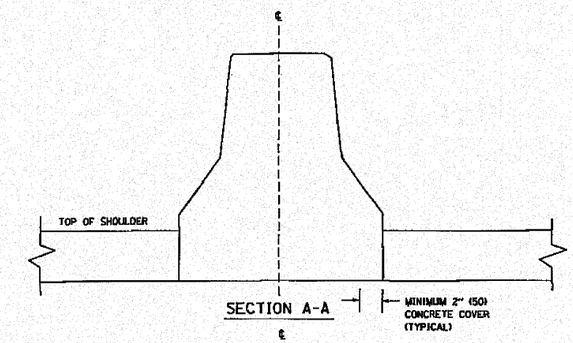

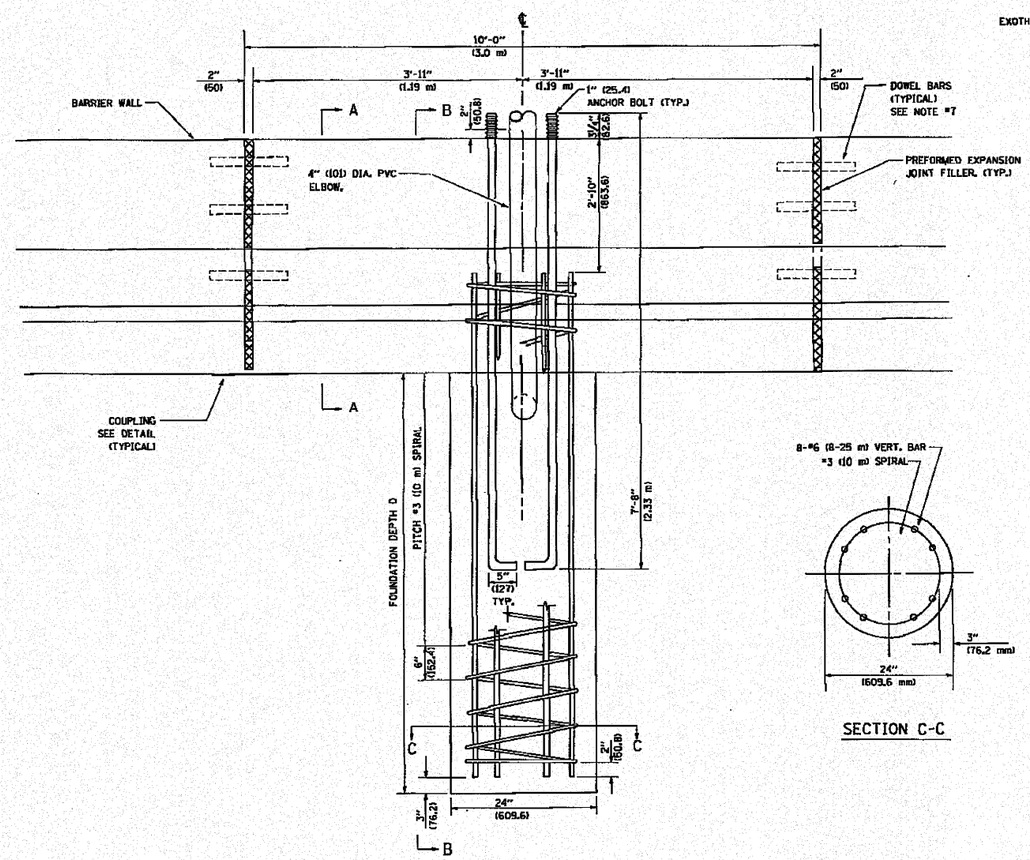

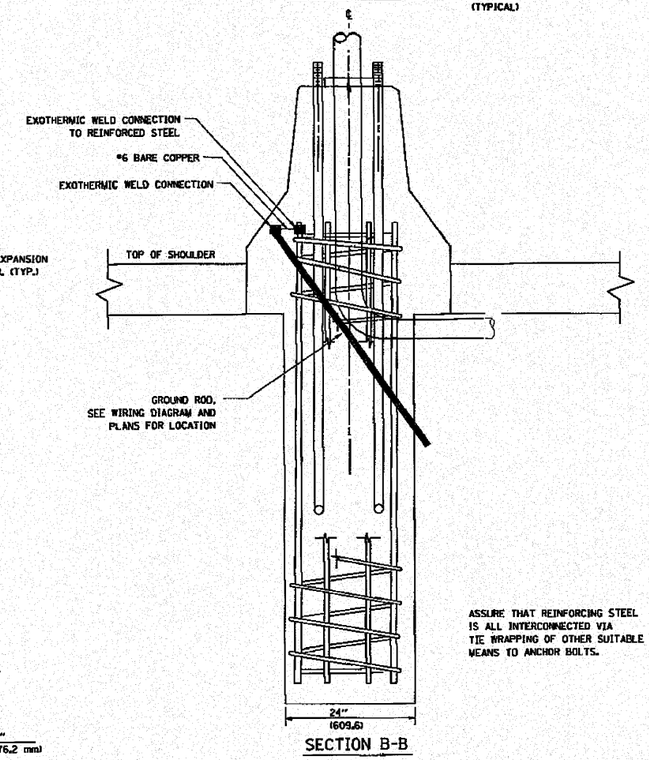

ASSURE THAT REINFORCING STEEL IS ALL INTERCONNECTED VIA TIE WRAPPING OF OTHER SUITABLE MEANS TO ANCHOR BOLTS.

FOUNDATION DEPTH

TYPE OF SOIL	FOUND DEPTH D	REINFORCEMENT IN FOUNDATION	
		VERTICAL BARS	SPIRAL
ROCK OR SOLIDIFIED SLAG	5'-0" (1.52 m)	NONE	NONE
DENSE SAND	7'-9" (2.36 m)	8-#6 x 9'-0" (8-20 m x 2.74 m)	#3 x 90' (3 m x 27.43 m)
MEDIUM SAND	8'-3" (2.51 m)	8-#6 x 9'-5" (8-20 m x 2.87 m)	#3 x 94' (3 m x 28.65 m)
LOOSE SAND	9'-0" (2.74 m)	8-#6 x 10'-2" (8-20 m x 3.09 m)	#3 x 100' (3 m x 30.48 m)
STIFF CLAY	7'-0" (2.13 m)	8-#6 x 10'-8" (8-20 m x 2.48 m)	#3 x 80' (3 m x 24.38 m)
MEDIUM CLAY	9'-6" (2.89 m)	8-#6 x 10'-8" (8-20 m x 3.25 m)	#3 x 104' (3 m x 31.69 m)
SOFT CLAY	13'-0" (3.96 m)	8-#6 x 14'-2" (8-20 m x 4.32 m)	#3 x 144' (3 m x 43.89 m)

DESIGN: 80 MPH AASHTO

o:\proj\33844\2_west\design\TFS\33844-Detail_Surveillance19.dgn

ENGINEERING CONSULTANT
Ciorba Group, Inc.
CONSULTING ENGINEERS
5507 North Cumberland Avenue, Suite 402
Chicago, Illinois 60656
Tel. 773.775.4009 Fax 773.775.4014
Email ciorbagc@ciorba.com

USER NAME = ccornwell	DESIGNED - JG & RT	REVISED -	
	DRAWN - RJR	REVISED -	
PLOT SCALE = 1.0000 ' / IN.	CHECKED - JMV	REVISED -	
PLOT DATE = 10/27/2010	DATE - 10/27/2010	REVISED -	

STATE OF ILLINOIS
DEPARTMENT OF TRANSPORTATION

LIGHT POLE FOUNDATION INTEGRAL WITH BARRIER WALL, 24" DIAMETER

SCALE: 1" = 50' | SHEET NO. OF 277 SHEETS | STA. TO STA.

F.A.I. RTE.	SECTION	COUNTY	TOTAL SHEETS	SHEET NO.
80	99-5-Y	WILL	277	182
		CONTRACT NO. 60147		
	ILLINOIS	FED. AID PROJECT		

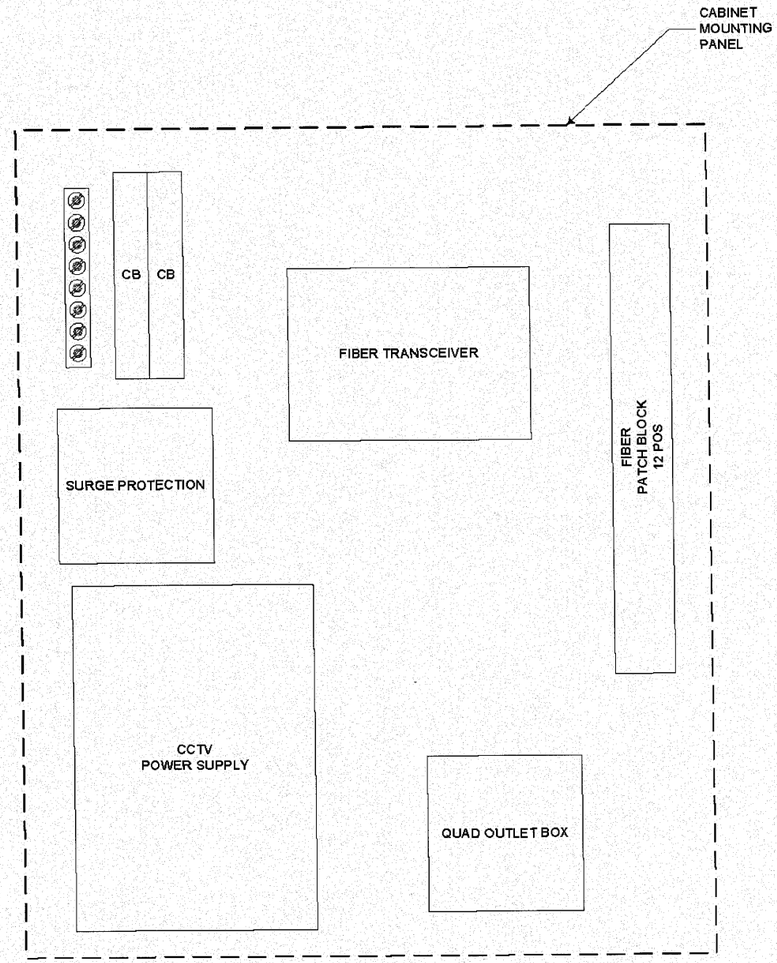

SUGGESTED EQUIPMENT LAYOUT

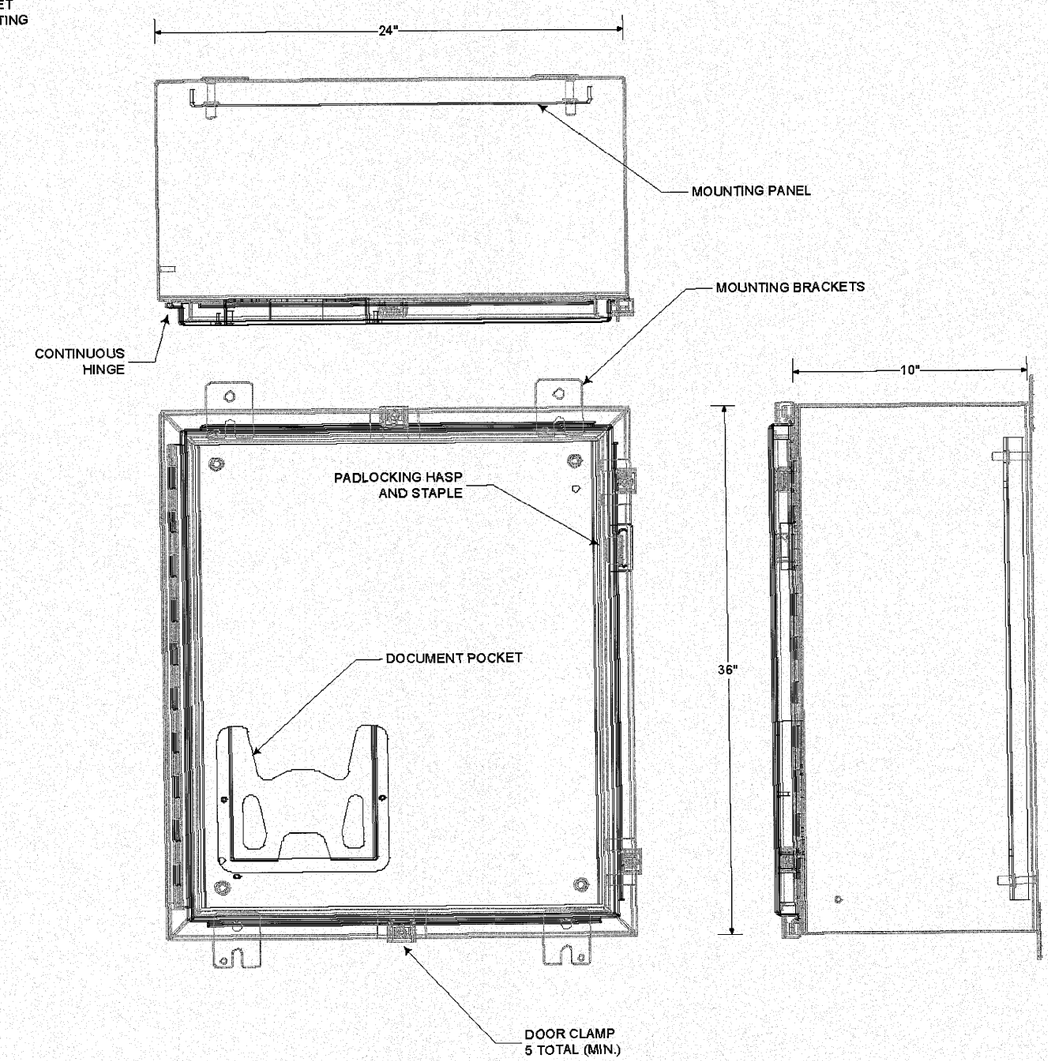

m:\proj\33841\2_west\design\ITS\33844-Detail_Surveillance20.dgn

ENGINEERING CONSULTANT
Clarke Group, Inc.
CONSULTING ENGINEERS
1207 North Cumberland Avenue, Suite 102
Chicago, Illinois 60656
Tel: 773.775.4200 Fax 773.775.4214
E-Mail: info@clarke-inc.com

USER NAME	DESIGNED RT	REVISED	
	DRAWN RT	REVISED	
PLOT SCALE	CHECKED	REVISED	
PLOT DATE	DATE 10/2009	REVISED	

STATE OF ILLINOIS
DEPARTMENT OF TRANSPORTATION

CCTV CAMERA EQUIPMENT
FIBER OPTIC DISTRIBUTION

SCALE: NONE | SHEET NO. __ OF __ SHEETS | STA. _____ TO STA. _____

F.A. RTE.	SECTION	COUNTY	TOTAL SHEETS	SHEET NO.
80	99-5-Y	WILL	277	183

CONTRACT NO. 60147

ILLINOIS FED. AID PROJECT

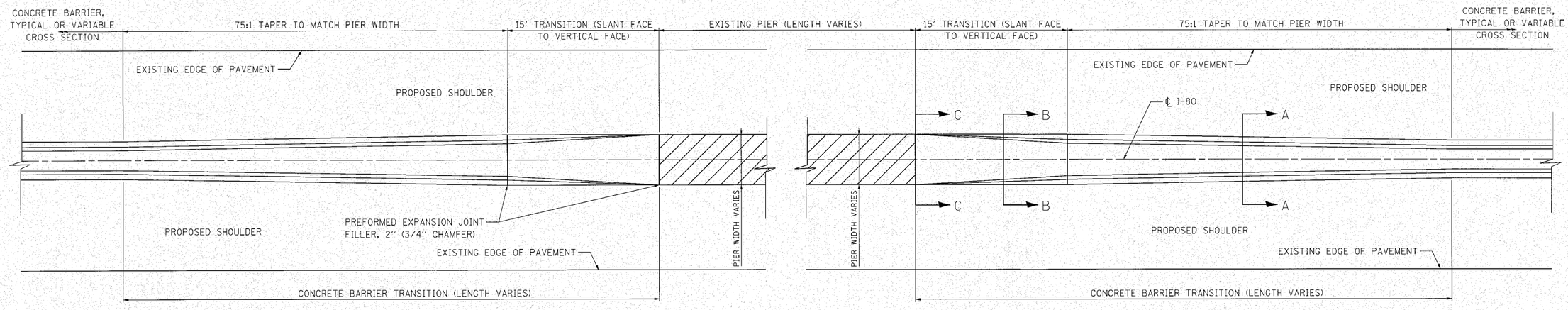

CONCRETE BARRIER TRANSITION AT PARKER ROAD PLAN VIEW

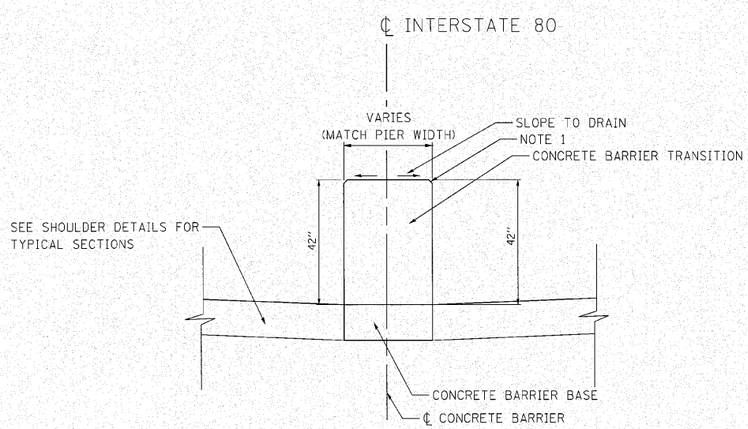

SECTION C-C

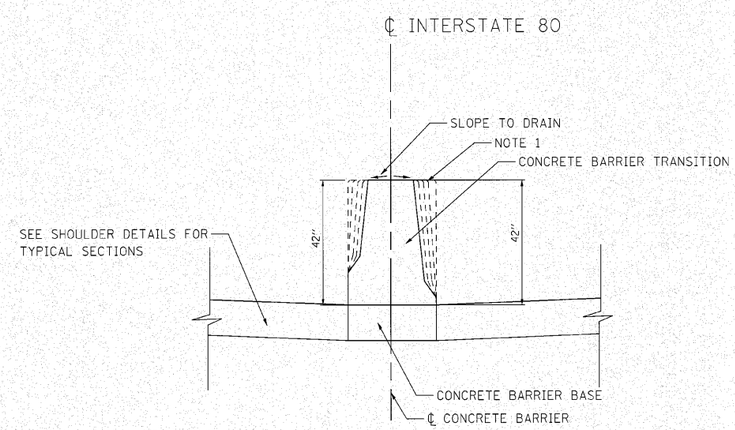

SECTION B-B

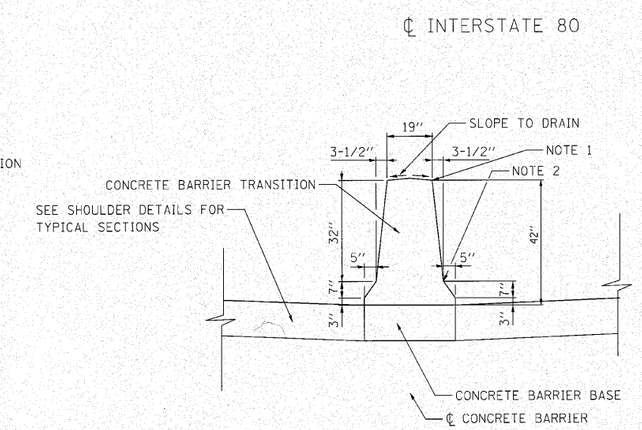

SECTION A-A

NOTE 1 - 3/4" CHAMFER OR 1" RADIUS (OPTIONAL)

NOTE 2 - 10" RADIUS (OPTIONAL)

GENERAL NOTES:

- SEE ROADWAY PLANS FOR EXACT TRANSITION DIMENSIONS.
- FURNISHING AND INSTALLING THE PREFORMED JOINT FILLER OF THE SIZE SPECIFIED SHALL BE INCLUDED IN THE COST OF THE CONCRETE BARRIER TRANSITION.
- FOR ADDITIONAL CONCRETE BARRIER DETAILS, SEE THE TYPICAL SECTIONS AND CONCRETE BARRIER DETAILS.
- FOR ADDITIONAL SHOULDER DETAILS, SEE THE TYPICAL SECTIONS.

n:\proj\33841\2_west\design\Details\33841W-Detail_Drain2L.dgn

ENGINEERING CONSULTANT	USER NAME = ccornwell	DESIGNED - CRC	REVISED -	STATE OF ILLINOIS DEPARTMENT OF TRANSPORTATION	F.A.I. 80 FROM US 30 TO NS RAILROAD CONCRETE BARRIER TRANSITION DETAIL	F.A.I. RTE.	SECTION	COUNTY	TOTAL SHEETS	SHEET NO.
Ciorba Group, Inc. CONSULTING ENGINEERS 5507 North Cumberland Avenue, Suite 402 Chicago, Illinois 60656 Tel: 773.775.4009 Fax 773.775.4014 Email chicago@ciorba.com		DRAWN - JMK	REVISED -			80	99-5-Y	WILL	276	184
	PLOT SCALE = 10.00 ' / IN.	CHECKED - MRJ	REVISED -					CONTRACT NO. 60147		
	PLOT DATE = 10/27/2010	DATE - 10/27/2010	REVISED -		SCALE: N.T.S. / SHEET NO. OF SHEETS / STA. TO STA.			ILLINOIS FED. AID PROJECT		

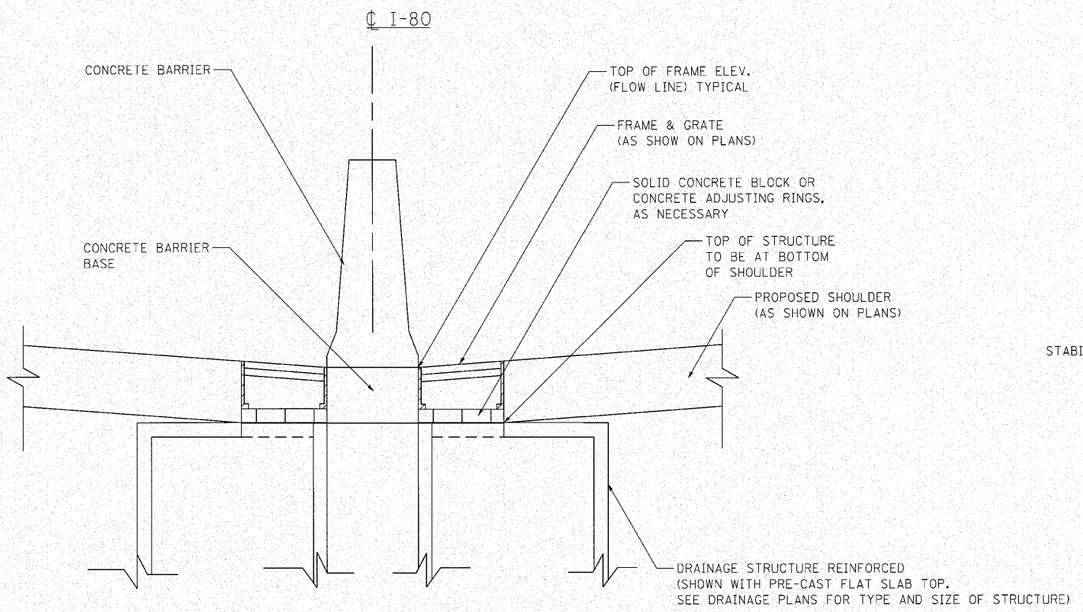

SIDE ELEVATION
CONCRETE BARRIER

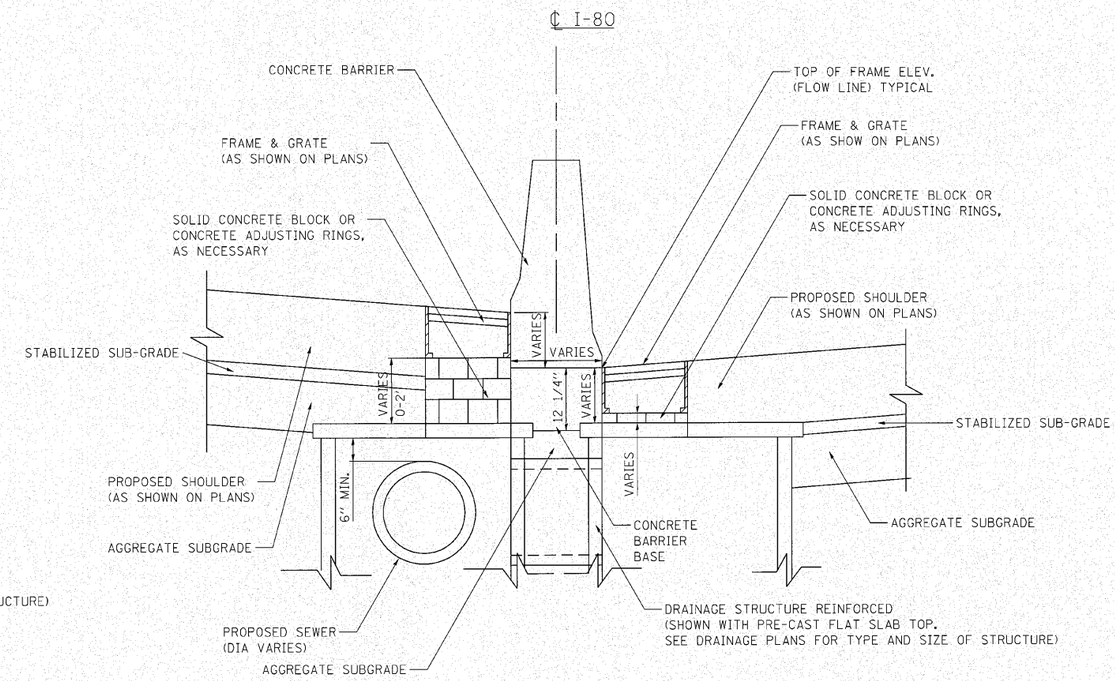

SIDE ELEVATION
CONCRETE BARRIER, VARIABLE CROSS SECTION

NOTES:

1. THE COST OF SOLID CONCRETE BLOCK OR CONCRETE ADJUSTING RINGS SHALL BE INCLUDED IN THE CONTRACT UNIT PRICE OF DRAINAGE STRUCTURES OF TYPE OR SIZE SPECIFIED.
2. SEE STATE AND DISTRICT 1 STANDARDS FOR DRAINAGE STRUCTURE DETAILS.
3. FOR STRUCTURE AND PIPE INFORMATION SEE DRAINAGE SCHEDULES.

n:\proj\33841\2_wes\design\Details\33841W-Detail_Drain02.dgn

ENGINEERING CONSULTANT
Ciorba Group, Inc.
CONSULTING ENGINEERS
5507 North Cumberland Avenue, Suite 402
Chicago, Illinois 60656
Tel 773.775.4008 Fax 773.775.4014
Email chicago@ciorba.com

USER NAME = ccornwell	DESIGNED - CRC	REVISED -
	DRAWN - JMK	REVISED -
PLOT SCALE = 10.00 ' / IN.	CHECKED - MRJ	REVISED -
PLOT DATE = 10/27/2010	DATE - 10/27/2010	REVISED -

STATE OF ILLINOIS
DEPARTMENT OF TRANSPORTATION

F.A.I. 80 FROM US 30 TO NS RAILROAD
DRAINAGE STRUCTURES AT BARRIER WALL

SCALE: N.T.S. | SHEET NO. OF SHEETS | STA. TO STA.

F.A.I. RTE.	SECTION	COUNTY	TOTAL SHEETS	SHEET NO.
80	99-5-Y	WILL	276	185
		CONTRACT NO. 60147		
		ILLINOIS	FED. AID PROJECT	

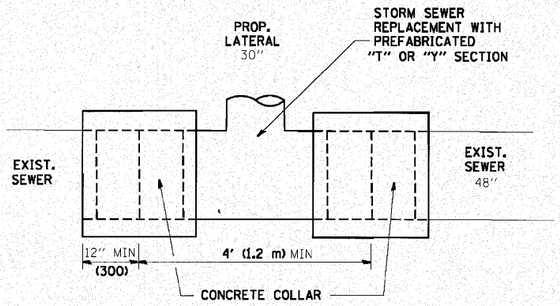

REINFORCED CONCRETE PIPE TEE

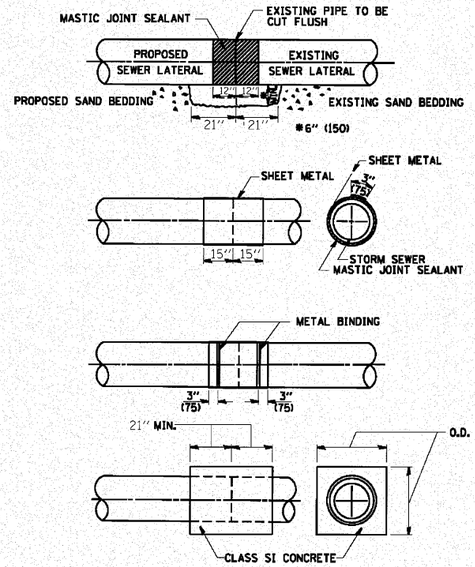

CLASS SI CONCRETE COLLAR

CONSTRUCTION SEQUENCE

1. CUT THE EXISTING END OF THE PIPE SO AS TO PRESENT A FLUSH BUTT JOINT. BRUSH AND CLEAN ALL PIPES.
2. APPLY THE MASTIC JOINT SEALANT TO THE FIRST 12" OF EACH PIPE.
3. BUTT THE PIPES TOGETHER LEAVING A MINIMUM OF 21" X 12" DEEP EXCAVATION UNDER AND AROUND EACH PIPE END.
4. CUT A PIECE OF SHEET METAL GAGE NO. 19 1.1 (0.041B) 30" WIDE BY THE OUTSIDE CIRCUMFERANCE OF THE PIPE PLUS 3" (75) LONG.
5. WRAP THE SHEET METAL AROUND THE PIPES, 15" ON EACH SIDE OF THE JOINT, STARTING AT THE TOP OF THE PIPE.
6. LAP THE SHEET METAL AT LEAST 3" (75) AT THE TOP OF THE PIPE AND PLACE THE MASTIC JOINT SEALANT BETWEEN THE LAP.
7. PLACE TWO METAL BANDS AROUND THE SHEET METAL AND TIGHTEN.
8. WIPE OFF ANY EXCESS MASTIC JOINT SEALANT THAT OOZES OUT FROM BETWEEN THE SHEET METAL AND THE PIPES.
9. PLACE CLASS SI CONCRETE AROUND THE JOINT.

UNDERDRAIN CONNECTION
TO STRUCTURE

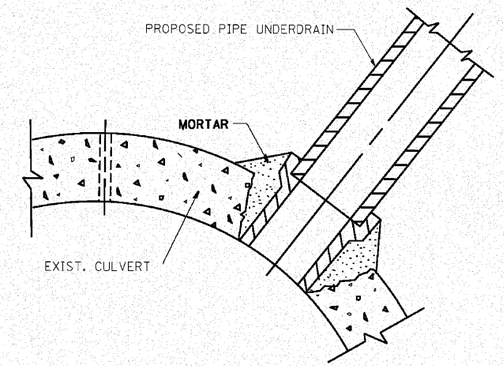

BASIS OF PAYMENT

TEE OR WYE CONNECTIONS SHALL BE PAID FOR AT THE CONTRACT UNIT PRICE EACH FOR STORM SEWER TEE OR WYE OF THE TYPE AND SIZE SPECIFIED IN THE PLANS, THIS PRICE SHALL INCLUDE ALL EXCAVATION OF THE TRENCH, REMOVAL OF THE EXISTING STORM SEWER, FURNISHING AND INSTALLING THE SPECIFIED TEE OR WYE SECTION, FURNISHING AND INSTALLING THE REQUIRED CONCRETE COLLAR, AND ALL OTHER MATERIAL NECESSARY TO COMPLETE THIS WORK AS SHOWN AND SPECIFIED.

REMOVAL AND REINSTALLATION OF EXISTING STORM SEWER ADJACENT TO THE PROPOSED TEE OR WYE SECTION, FOR THE PURPOSE OF FACILITATING THE INSTALLATION OF THE TEE OR WYE SECTION, WILL NOT BE PAID FOR SEPARATELY BUT SHALL BE INCLUDED IN THE UNIT PRICE BID FOR THE WORK.

TRENCH BACKFILL, EXCAVATION IN ROCK AND REMOVAL AND REPLACEMENT OF UNSUITABLE MATERIAL BELOW PLAN BEDDING GRADE WILL BE PAID FOR SEPARATELY.

CONCRETE COLLAR FOR CONNECTING A PROPOSED STORM SEWER TO AN EXISTING STORM SEWER WILL NOT BE PAID PAID FOR SEPARATELY BUT SHALL BE INCLUDED IN THE COST OF THE PROPOSED STORM SEWER.

MATERIAL

MATERIAL USED FOR THE TEE OR WYE SECTION SHALL BE COMPATIBLE WITH THE EXISTING STORM SEWER OR THE PROPOSED STORM SEWER.

CONSTRUCTION METHODS

I. THIS WORK SHALL BE CONSTRUCTED IN CONFORMANCE WITH THE APPLICABLE PORTIONS OF SECTION 550 OF THE STANDARD SPECIFICATIONS.

IF THE EXISTING SEWER PIPE IS CRACKED, BROKEN OR OTHERWISE DAMAGED BY THE CONTRACTOR IN MAKING THE CIRCULAR OPENING, THE CONTRACTOR SHALL REPLACE THAT SECTION OF PIPE WITH PIPE EQUAL AND SIMILAR IN ALL RESPECTS TO THE PIPE IN THE EXISTING SEWER, IN A CAREFUL WORKMANLIKE MANNER, WITHOUT EXTRA COMPENSATION.

NOTES

GENERAL

CARE MUST BE TAKEN TO PREVENT DEBRIS FROM ENTERING THE SEWER. ALL DEBRIS WHICH ENTERS THE SEWER MUST BE REMOVED. THE SEWER MUST BE LEFT CLEAN AND UNOBSTRUCTED UPON COMPLETION OF THE CONTRACT.

CARE MUST BE TAKEN TO PREVENT ANY PART OF THE NEW PIPE CONNECTION FROM PROJECTING INTO THE EXISTING SEWER.

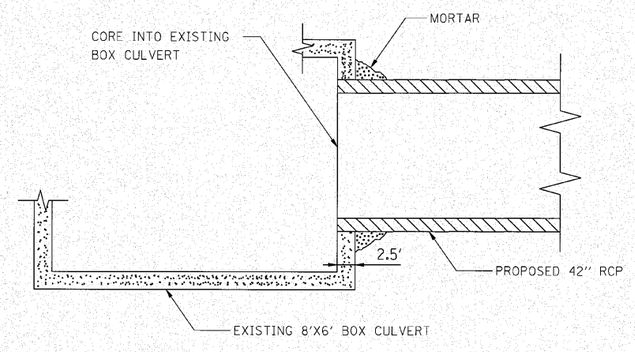

PROPOSED STORM SEWER
CONNECTION TO EXISTING CULVERT

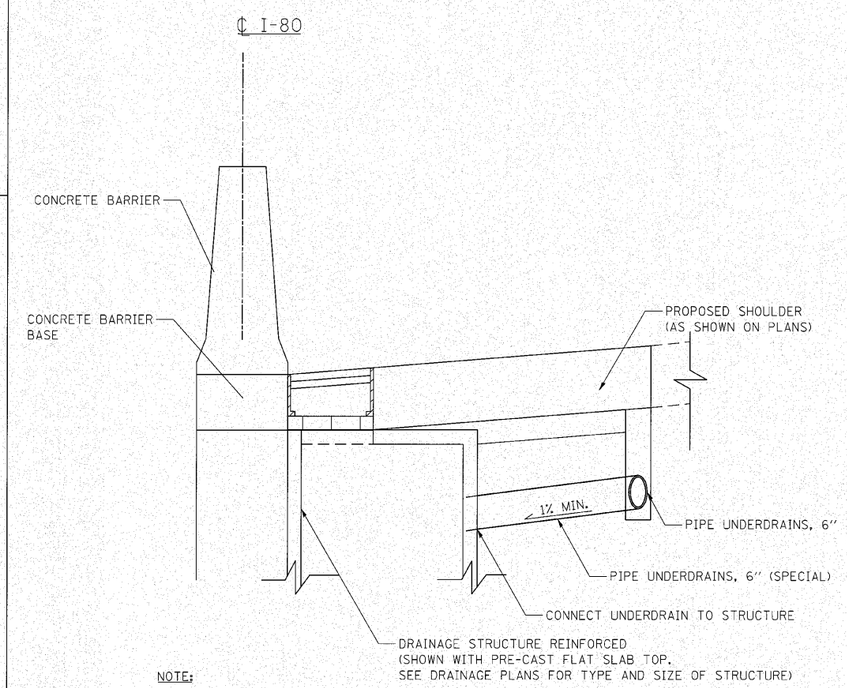

NOTE:

THE CONTRACTOR SHALL CAREFULLY CORE INTO THE EXISTING DRAINAGE STRUCTURE THE SAME SIZE AS THE EXTERNAL DIAMETER OF THE PROPOSED PIPE UNDERDRAIN AT THE LINE AND GRADE AS SHOWN IN THE PLANS. THE PROTRUSION OF THE PROPOSED PIPE UNDERDRAIN INTO THE DRAINAGE STRUCTURE MUST NOT EXCEED A MAXIMUM OF ONE INCH. AFTER THE PIPE UNDERDRAIN IS INSTALLED, THE DRAINAGE STRUCTURE SHALL BE MORTARED WITH A NON-SHRINK CONCRETE GROUT.

ALL DIMENSIONS ARE IN INCHES (MILLIMETERS) UNLESS OTHERWISE SHOWN.

n:\proj\33841_west\design\Details\33841-Detail_Drain03.dgn

ENGINEERING CONSULTANT	USER NAME = ccornwell	DESIGNED - CRC	REVISED -	STATE OF ILLINOIS DEPARTMENT OF TRANSPORTATION	DRAINAGE CONNECTIONS DETAILS	F.A.I. RTE.	SECTION	COUNTY	TOTAL SHEETS	SHEET NO.
Ciorba Group, Inc. CONSULTING ENGINEERS 5507 North Cumberland Avenue, Suite 402 Chicago, Illinois 60656 Tel 773.775.4008 Fax 773.775.4014 Email chicago@ciorba.com		DRAWN - JMK	REVISED -			80	99-5-Y	WILL	276	186
	PLOT SCALE = 1.0000 ' / IN.	CHECKED - MRJ	REVISED -					CONTRACT NO. 60147		
	PLOT DATE = 10/27/2010	DATE - 10/27/2010	REVISED -		SCALE: SHEET NO. OF SHEETS STA. TO STA.			ILLINOIS FED. AID PROJECT		

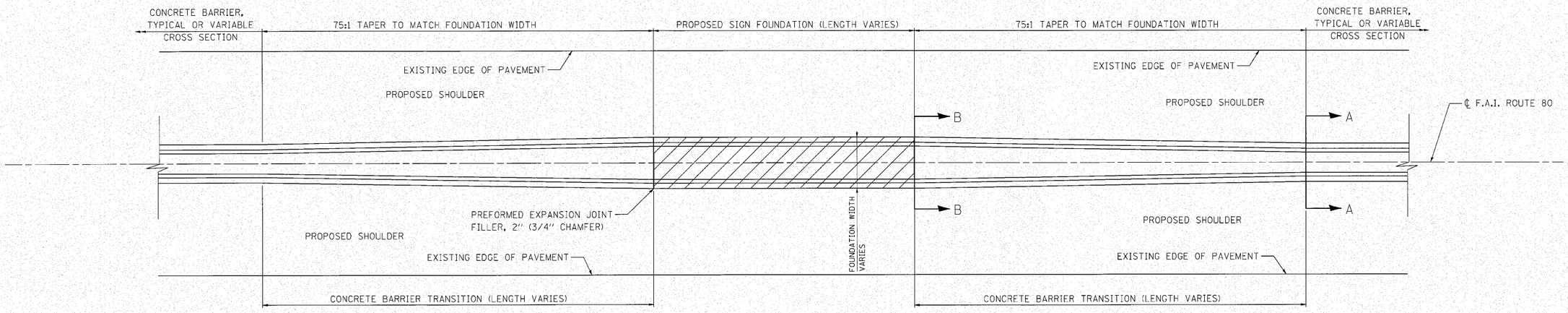

CONCRETE BARRIER TRANSITION AT SIGN FOUNDATIONS

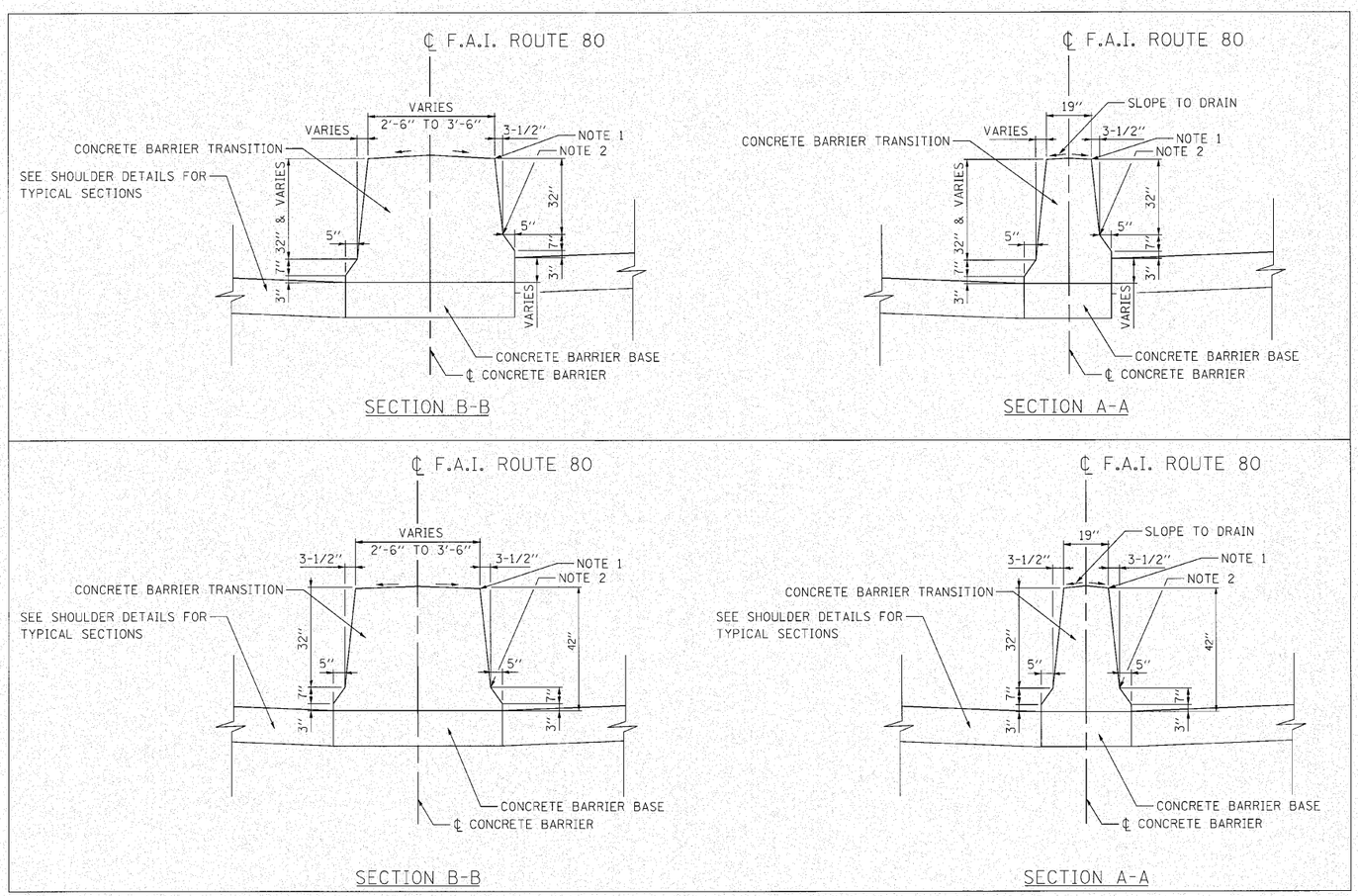

VARIABLE CROSS SECTION BARRIER WALL

STANDARD BARRIER WALL

GENERAL NOTES:

- SEE ROADWAY PLANS FOR EXACT TRANSITION DIMENSIONS.
- FURNISHING AND INSTALLING THE PREFORMED JOINT FILLER OF THE SIZE SPECIFIED SHALL BE INCLUDED IN THE COST OF THE CONCRETE BARRIER TRANSITION.
- FOR ADDITIONAL CONCRETE BARRIER DETAILS, SEE THE TYPICAL SECTIONS AND CONCRETE BARRIER DETAILS.
- FOR ADDITIONAL SHOULDER DETAILS, SEE THE TYPICAL SECTIONS.
- FOR FOUNDATION DIMENSIONS, SEE STRUCTURAL PLANS

NOTE 1 - 3/4" CHAMFER OR 1" RADIUS (OPTIONAL)

NOTE 2 - 10" RADIUS (OPTIONAL)

n:\proj\33841\2_west\design\Details\33841W-Detail_Drain04.dgn

ENGINEERING CONSULTANT
Ciorba Group, Inc.
CONSULTING ENGINEERS
5507 North Cumberland Avenue, Suite 402
Chicago, Illinois 60656
Tel 773.775.4300 Fax 773.775.4014
E-mail chicago@ciorba.com

USER NAME = ccornwell	DESIGNED - CRC	REVISED -
	DRAWN - JMK	REVISED -
PLOT SCALE = 10.00 ' / IN.	CHECKED - MRJ	REVISED -
PLOT DATE = 10/27/2010	DATE - 10/27/2010	REVISED -

STATE OF ILLINOIS
DEPARTMENT OF TRANSPORTATION

F.A.I. 80 FROM US 30 TO NS RAILROAD
BARRIER TRANSITION AT SIGN FOUNDATION DETAIL

SCALE: N.T.S. | SHEET NO. OF SHEETS | STA. TO STA.

F.A.I. RTE.	SECTION	COUNTY	TOTAL SHEETS	SHEET NO.
80	99-5-Y	WILL	276	187

CONTRACT NO. 60147

ILLINOIS FED. AID PROJECT

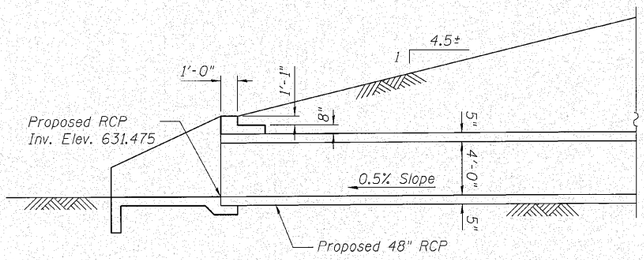

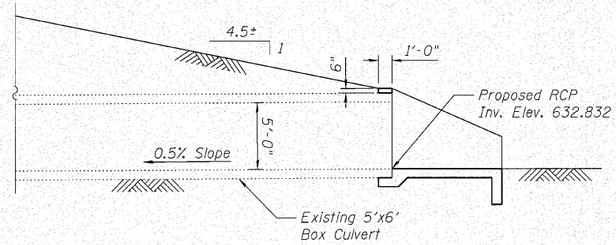

LONGITUDINAL SECTION

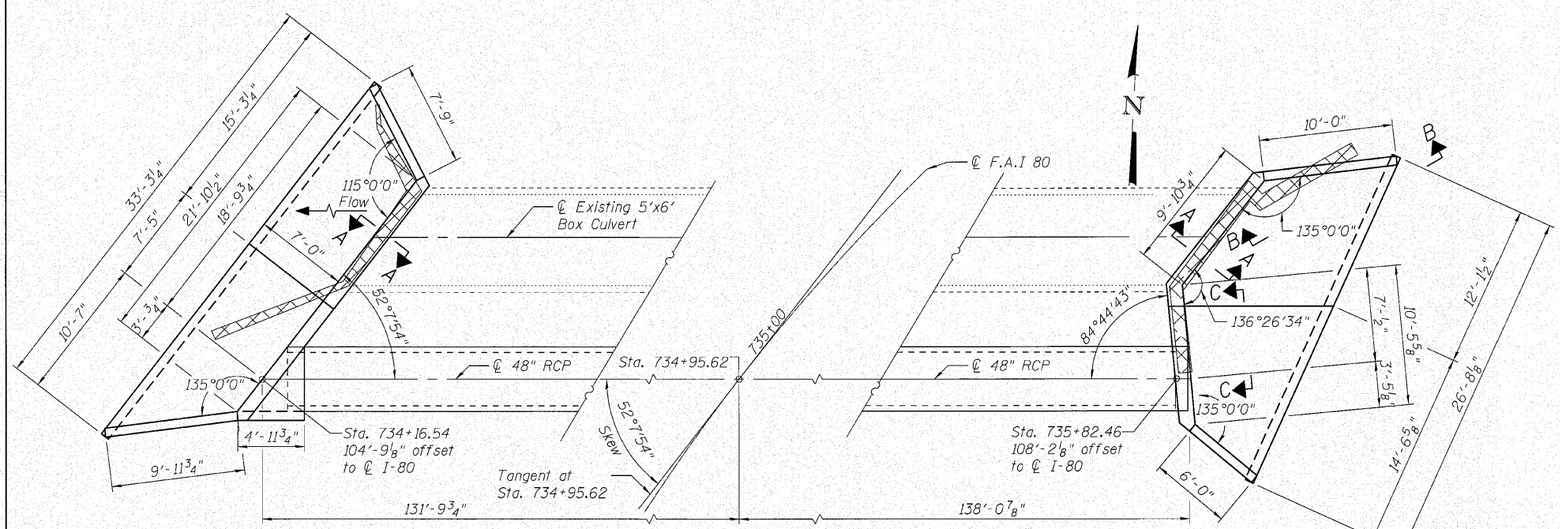

PLAN

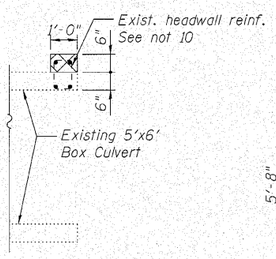

SECTION A-A

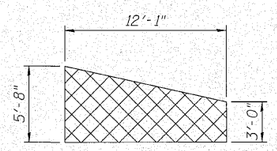

SECTION B-B

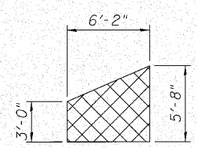

SECTION C-C

GENERAL NOTES:

1. All exposed concrete edges shall have a ¾" x 45° chamfer. Except where shown otherwise. Chamfer on vertical edges shall be continued a minimum of one foot below finished ground level.
2. Reinforcement bars, including epoxy-coated reinforcement bars, shall conform to the requirements of ASTM A706, Grade 60 (Special Provision).
3. Reinforcement bars designated "(E)" shall be epoxy coated.
4. Bars noted thus, 3 x 2-#5 indicated 3 lines of bars with 2 lengths of bars per line.
5. Cover from the face of concrete to face of reinforcement shall be 3" for surfaces formed against earth and 2" for all other surfaces unless otherwise shown.
6. No construction joints except those shown on the plans will be allowed unless approved by the engineer. All construction joints shall be bonded.
7. For backfilling and embankment see article 206.4 of standard specifications.
8. The contractor shall use care when excavating around existing foundations. Any damage to the existing structure shall be repaired or replaced at the contractors' expense.
9. Plan dimensions and details relative to existing structure have been taken from existing plans and are subject to nominal construction variations. it shall be the contractor's responsibility to verify such dimensions and details in the field and make necessary approved adjustments prior to construction or ordering of materials. Such variations shall not be cause for additional compensation for a change in the scope of the work; however, the contractor will be paid for the quantity actually furnished at the unit price for the work.
10. Existing headwall reinforcement shall be cleaned and incorporated into new construction. Cost included w/Concrete Removal. Any damage shall be repaired at Contractor's expense.

DESIGN STRESSES:

FIELD UNITS (NEW STRUCTURE)

f'c = 3,500 psi (Concrete)
fy = 60,000 psi (Reinforcement)

SEQUENCE OF CONSTRUCTION

1. Redirect water through existing box culvert.
2. Remove south wingwalls on each end of culvert.
3. Excavate for proposed south wingwalls.
4. Jack and bore 48" RCP in place.
5. Construct proposed south wingwalls and aprons.
6. Redirect water through 48" RCP.
7. Remove existing headwalls and north wingwalls.
8. Construct propsed north wingwalls and aprons.
9. Final grading.

LEGEND:

- Existing concrete to be removed
- Existing structure
- Proposed structure

TOTAL BILL OF MATERIAL

Description	Unit	Quantity
Concrete Removal	Cu. Yd.	3.6
Structure Excavation	Cu. Yd.	89
Concrete Structures	Cu. Yd.	26.9
Reinforcement Bars Epoxy Coated	Pound	2.180

Clorba Group, Inc.
CONSULTING ENGINEERS
6337 North Cumberland Avenue
Suite 100 Chicago, Illinois 60646
Tel: 773.775.4006
Fax 773.775.4014
Email: cf-cscc@clorba.com

USER NAME = mthomas	DESIGNED - BWS	REVISED -	
	CHECKED - EKM	REVISED -	
PLOT SCALE =	DRAWN - RD	REVISED -	
PLOT DATE = 10/27/2010	CHECKED - SCD	REVISED -	

STATE OF ILLINOIS
DEPARTMENT OF TRANSPORTATION

GENERAL PLAN & ELEVATION
HICKORY CREEK TRIBUTARY CULVERT

SHEET NO. 1 OF 3 SHEETS

F.A.I. RTE.	SECTION	COUNTY	TOTAL SHEETS	SHEET NO.
80	99-5-Y	WILL	276	188

CONTRACT NO. 60147

ILLINOIS FED. AID PROJECT

n:\proj\33841\2_west\design\details\3384-Parallel Culvert 01 GP.dgn

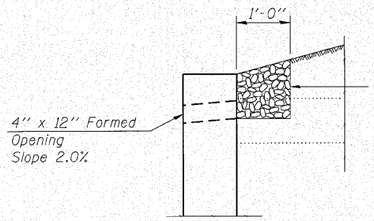

DRAIN DETAIL

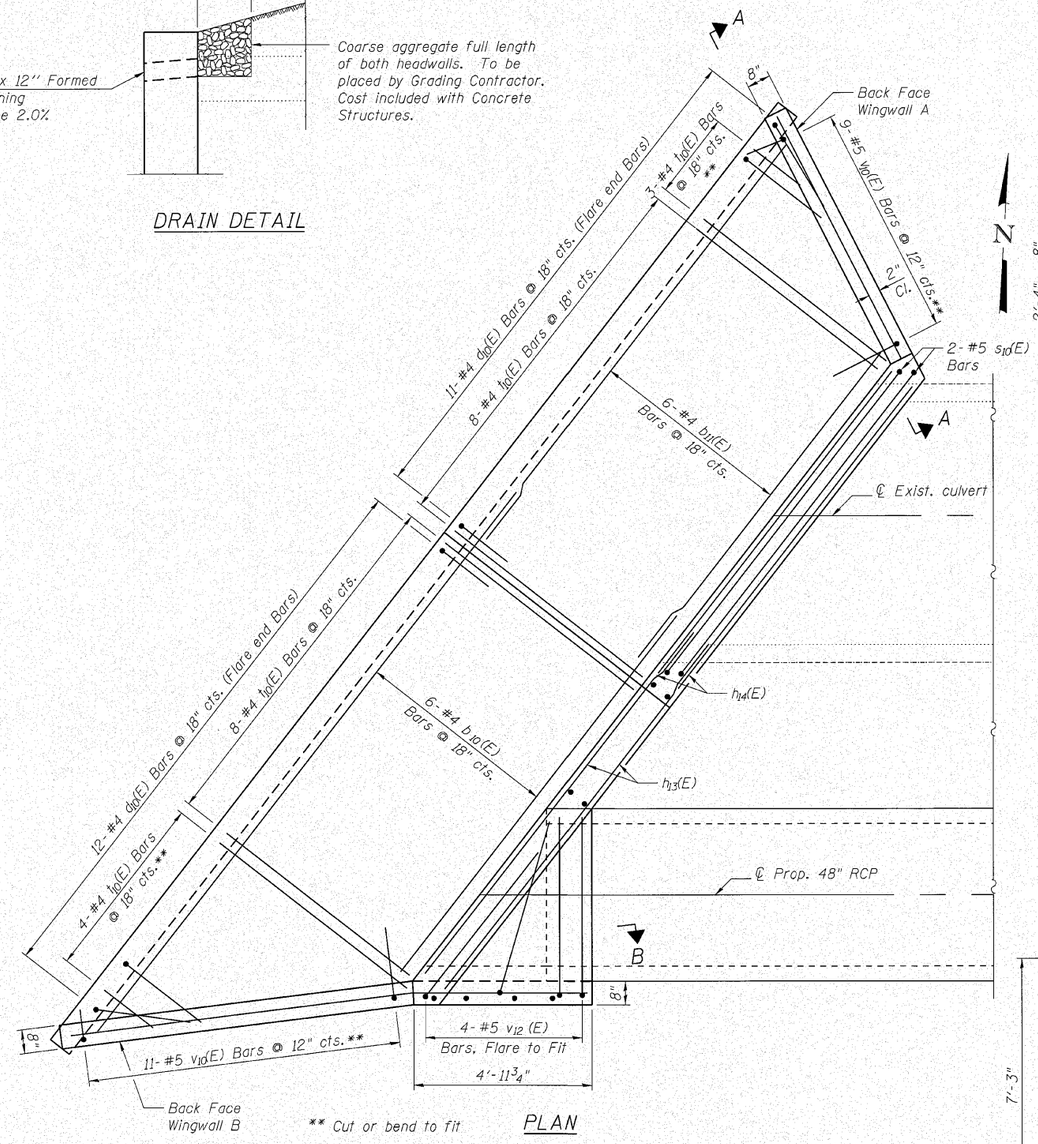

** Cut or bend to fit

PLAN

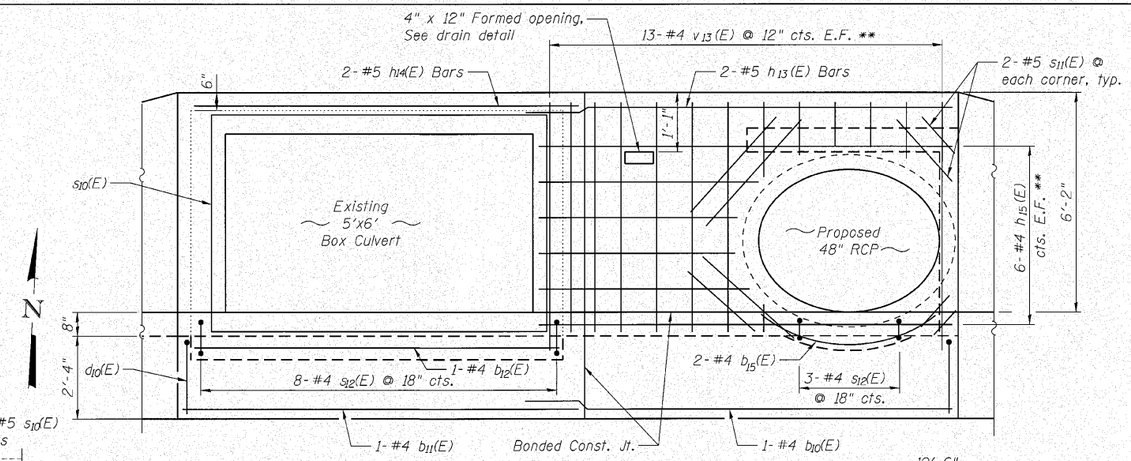

END ELEVATION

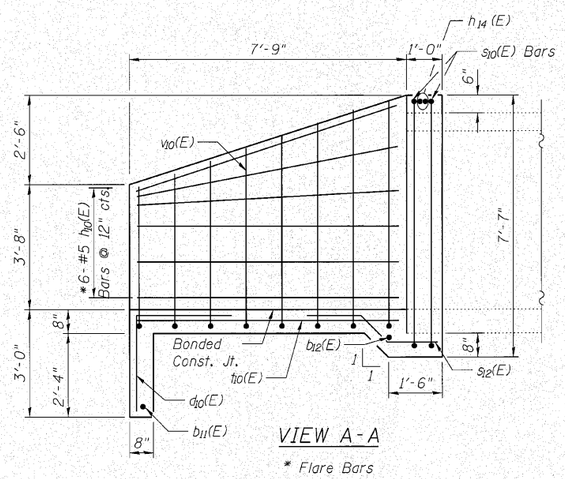

VIEW A-A

* Flare Bars

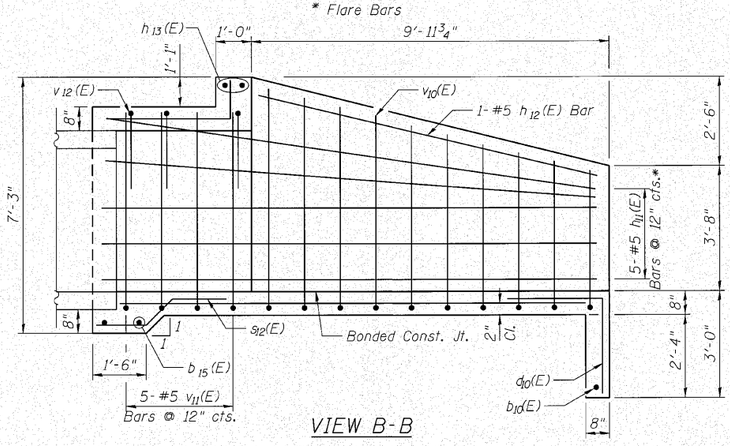

VIEW B-B

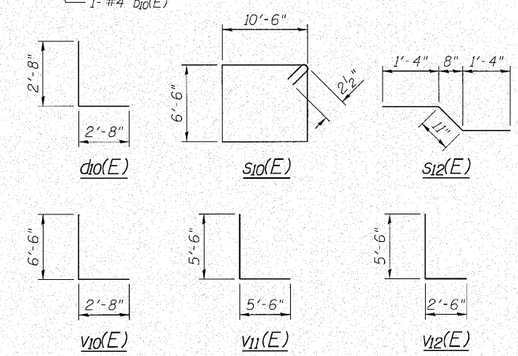

Minimum Lap Length

#4 Bar = 2'-0"
#5 Bar = 2'-6"

BILL OF MATERIAL

Bar	No.	Size	Length	Shape
b_{10}(E)	7	#4	20'-4"	
b_{11}(E)	7	#4	14'-1"	
b_{12}(E)	1	#4	11'-0"	
b_{15}(E)	2	#4	5'-0"	
d_{10}(E)	23	#4	5'-4	L
h_{10}(E)	6	#5	7'-6"	
h_{11}(E)	5	#5	13'-11"	
h_{12}(E)	1	#5	9'-10"	
h_{13}(E)	2	#5	12'-9"	
h_{14}(E)	2	#5	11'-1"	
h_{15}(E)	12	#4	11'-7"	
s_{10}(E)	2	#5	34'-5"	
s_{11}(E)	8	#5	4'-0"	
s_{12}(E)	11	#4	3'-7"	
t_{10}(E)	23	#4	6'-8"	
v_{10}(E)	20	#5	9'-2"	L
v_{11}(E)	5	#5	11'-0"	L
v_{12}(E)	4	#5	8'-0"	L
v_{13}(E)	26	#4	6'-6"	
Structure Excavation			Cu. Yd.	51
Concrete Structures			Cu. Yd.	13.8
Reinforcement Bars, Epoxy Coated			Pound	1,170

Ciorba Group, Inc.
CONSULTING ENGINEERS
2307 North Cumberland Avenue
Suite 103 Chicago, Illinois 60656
Tel. 773.775.4006
Fax 773.775.4011
Email chicago@ciorba.com

USER NAME = mthomas	DESIGNED - BWS	REVISED -	
	CHECKED - EKM	REVISED -	
PLOT SCALE =	DRAWN - RD	REVISED -	
PLOT DATE = 10/27/2010	CHECKED - SCD	REVISED -	

STATE OF ILLINOIS
DEPARTMENT OF TRANSPORTATION

WEST HEADWALL DETAILS
HICKORY CREEK TRIBUTARY CULVERT

SHEET NO. 2 OF 3 SHEETS

F.A.I. RTE.	SECTION	COUNTY	TOTAL SHEETS	SHEET NO.
80	99-5-Y	WILL	276	189
		CONTRACT NO. 60147		
		ILLINOIS	FED. AID PROJECT	

n:\proj\3384\2_west\design\details\3384-Parallel Culvert 02 Details 1.dgn

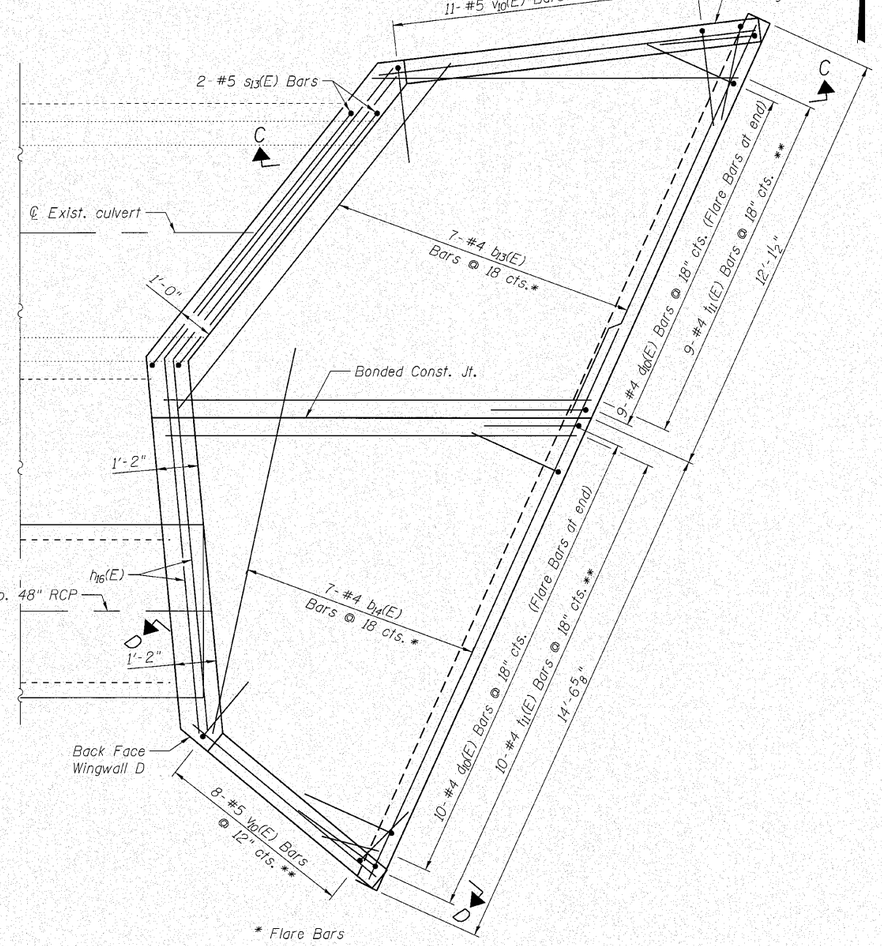

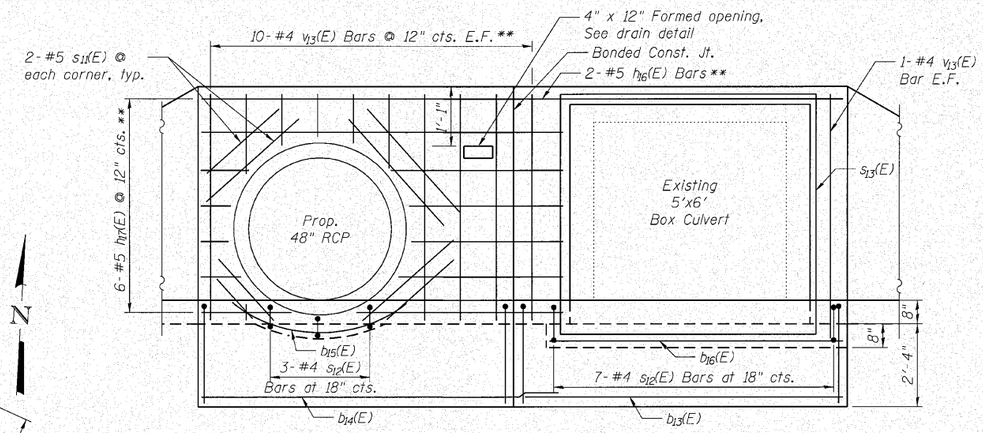

END ELEVATION

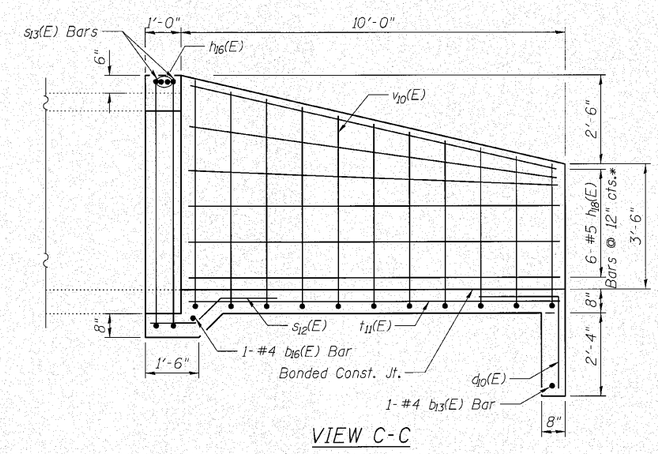

VIEW C-C

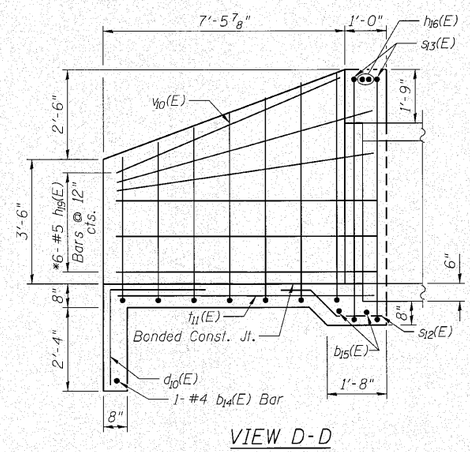

VIEW D-D

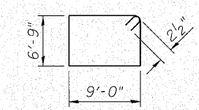

s13(E)

NOTES:

1. For $d_{10}(E)$, $s_{12}(E)$, and $v_{10}(E)$ Bar dimensions see sheet S-160.
2. For minimum lap lengths and drain detail see sheet S-160.

BILL OF MATERIAL

Bar	No.	Size	Length	Shape
$b_{13}(E)$	8	#4	12'-0"	—
$b_{14}(E)$	8	#4	16'-11"	—
$b_{15}(E)$	1	#4	5'-0"	⌒
$b_{16}(E)$	1	#4	8'-0"	—
$d_{10}(E)$	19	#4	5'-4"	L
$h_{16}(E)$	2	#5	20'-4"	—
$h_{17}(E)$	6	#5	10'-1"	—
$h_{18}(E)$	6	#5	10'-5"	—
$h_{19}(E)$	6	#5	7'-5"	—
$s_{11}(E)$	8	#5	4'-0"	—
$s_{12}(E)$	10	#4	3'-7"	⌐
$s_{13}(E)$	2	#5	31'-11"	□
$t_{11}(E)$	19	#4	12'-0"	—
$v_{10}(E)$	19	#5	9'-2"	L
$v_{13}(E)$	22	#4	6'-6"	—
Structure Excavation			Cu. Yd.	38
Concrete Structures			Cu. Yd.	13.1
Reinforcement Bars, Epoxy Coated			Pound	1,010

Ciorba Group, Inc.
CONSULTING ENGINEERS
2907 North Cumberland Avenue
Suite 457, Chicago, Illinois 60666
Tel. 773.775.4014
Fax 773.775.4015
Email chicago@ciorba.com

USER NAME = mthomas	DESIGNED - BWS	REVISED -	
	CHECKED - EKM	REVISED -	
PLOT SCALE =	DRAWN - RD	REVISED -	
PLOT DATE = 10/27/2010	CHECKED - SCD	REVISED -	

STATE OF ILLINOIS
DEPARTMENT OF TRANSPORTATION

EAST HEADWALL DETAILS
HICKORY CREEK TRIBUTARY CULVERT

SHEET NO. 3 OF 3 SHEETS

F.A.I. RTE.	SECTION	COUNTY	TOTAL SHEETS	SHEET NO.
80	99-5-Y	WILL	276	190
		CONTRACT NO. 60147		
		ILLINOIS FED. AID PROJECT		

m:\proj\3384\2-east\design\details\3384-Parallel Culvert 03 Details 2.dgn

DESIGN STRESSES:

FIELD UNITS

f'c = 3,500 psi (Concrete)

fy = 60,000 psi (Reinforcement)

GENERAL NOTES:

1. All exposed concrete edges shall have a $^3/_4$" x 45° chamfer. Except where shown otherwise. Chamfer on vertical edges shall be continued a minimum of one foot below finished ground level.
2. Reinforcement bars, including epoxy-coated reinforcement bars, shall conform to the requirements of ASTM A706, Grade 60 (IL Modified).
3. Reinforcement bars designated "(E)" shall be epoxy coated.
4. Bars noted thus, 3 x 2-#5 indicated 3 lines of bars with 2 lengths of bars per line.
5. Cover from the face of concrete to face of reinforcement shall be 3" for surfaces formed against earth and 2" for all other surfaces unless otherwise shown.
6. No construction joints except those shown on the plans will be allowed unless approved by the engineer. All construction joints shall be bonded.
7. For backfilling and embankment see article 206.4 of standard specifications.

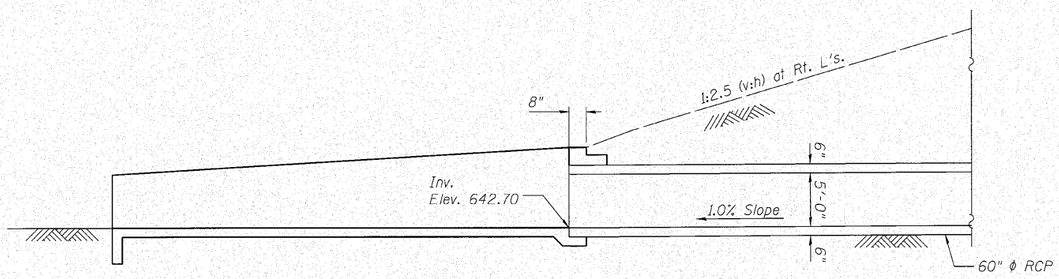

LONGITUDINAL SECTION

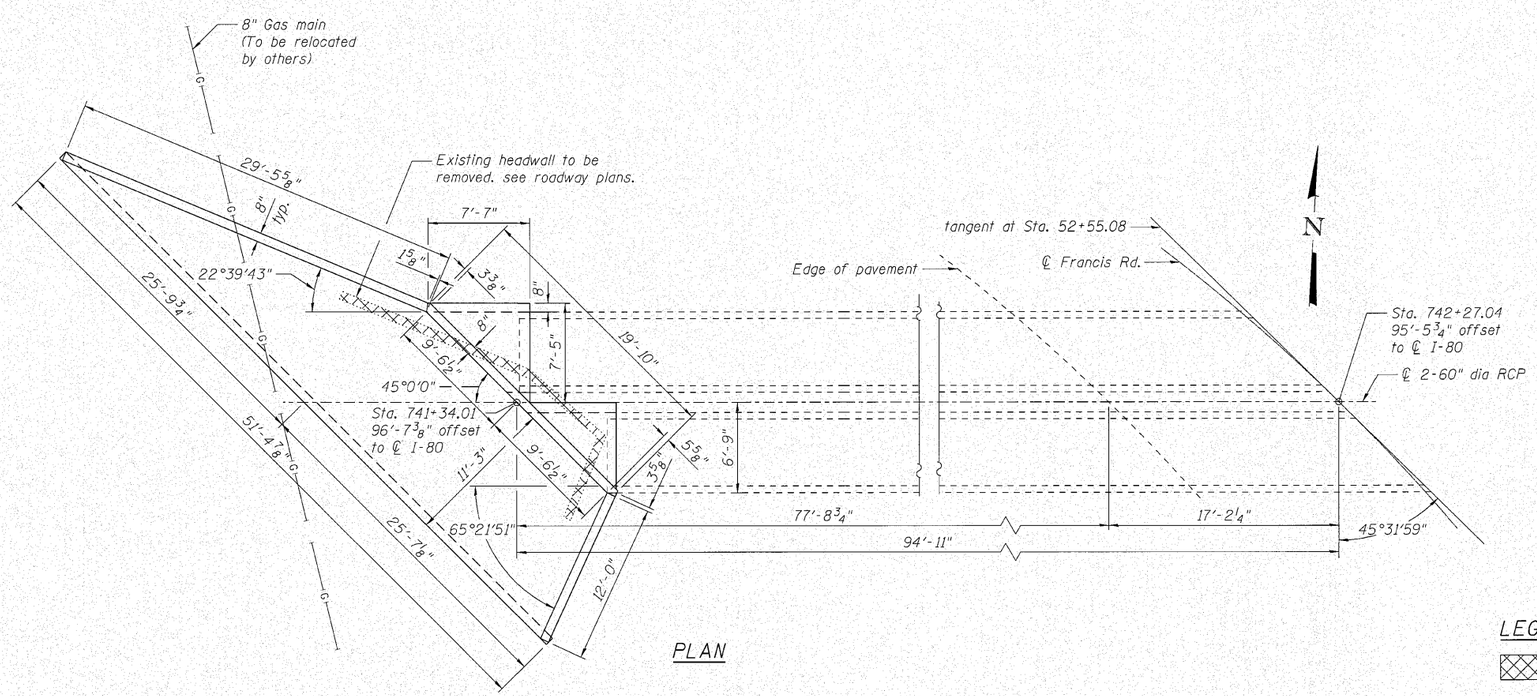

PLAN

LEGEND:

Existing Removal Headwall

BILL OF MATERIAL

Bar	No.	Size	Length	Shape
d_{30}(E)	35	#4	13'-6"	
h_{30}(E)	15	#4	19'-0"	
h_{31}(E)	15	#4	33'-6"	
h_{32}(E)	7	#4	29'-2"	
h_{33}(E)	7	#4	11'-8"	
h_{34}(E)	7	#4	9'-0"	
h_{35}(E)	7	#4	6'-4"	
h_{36}(E)	28	#4	8'-7"	
h_{37}(E)	28	#4	6'-10"	
h_{38}(E)	2	#5	19'-1"	
s_{30}(E)	16	#5	4'-0"	
v_{30}(E)	41	#5	8'-1"	
v_{31}(E)	16	#4	9'-2"	
Concrete Structures			Cu. Yd.	23.4
Reinforcement Bars, Epoxy Coated			Pound	1,950

Ciorba Group, Inc.
CONSULTING ENGINEERS
2857 North Cumberland Avenue
Suite 402 Chicago, Illinois 60656
Tel. 773.775.4200
Fax 773.775.4214
Email: chicago@ciorba.com

USER NAME = mthomas	DESIGNED - AMK	REVISED -	
	CHECKED - BWS	REVISED -	
PLOT SCALE =	DRAWN - RD	REVISED -	
PLOT DATE = 10/27/2010	CHECKED - AMK	REVISED -	

STATE OF ILLINOIS
DEPARTMENT OF TRANSPORTATION

GENERAL PLAN AND ELEVATION
FRANCIS ROAD CULVERT HEADWALL

SHEET NO. 1 OF 2 SHEETS

F.A.I. RTE.	SECTION	COUNTY	TOTAL SHEETS	SHEET NO.
80	99-5-Y	WILL	276	191
		CONTRACT NO. 60147		
		ILLINOIS FED. AID PROJECT		

n:\proj\3384\2_west\design\details\3384-Francis Rd Culvert 01 GP.dgn

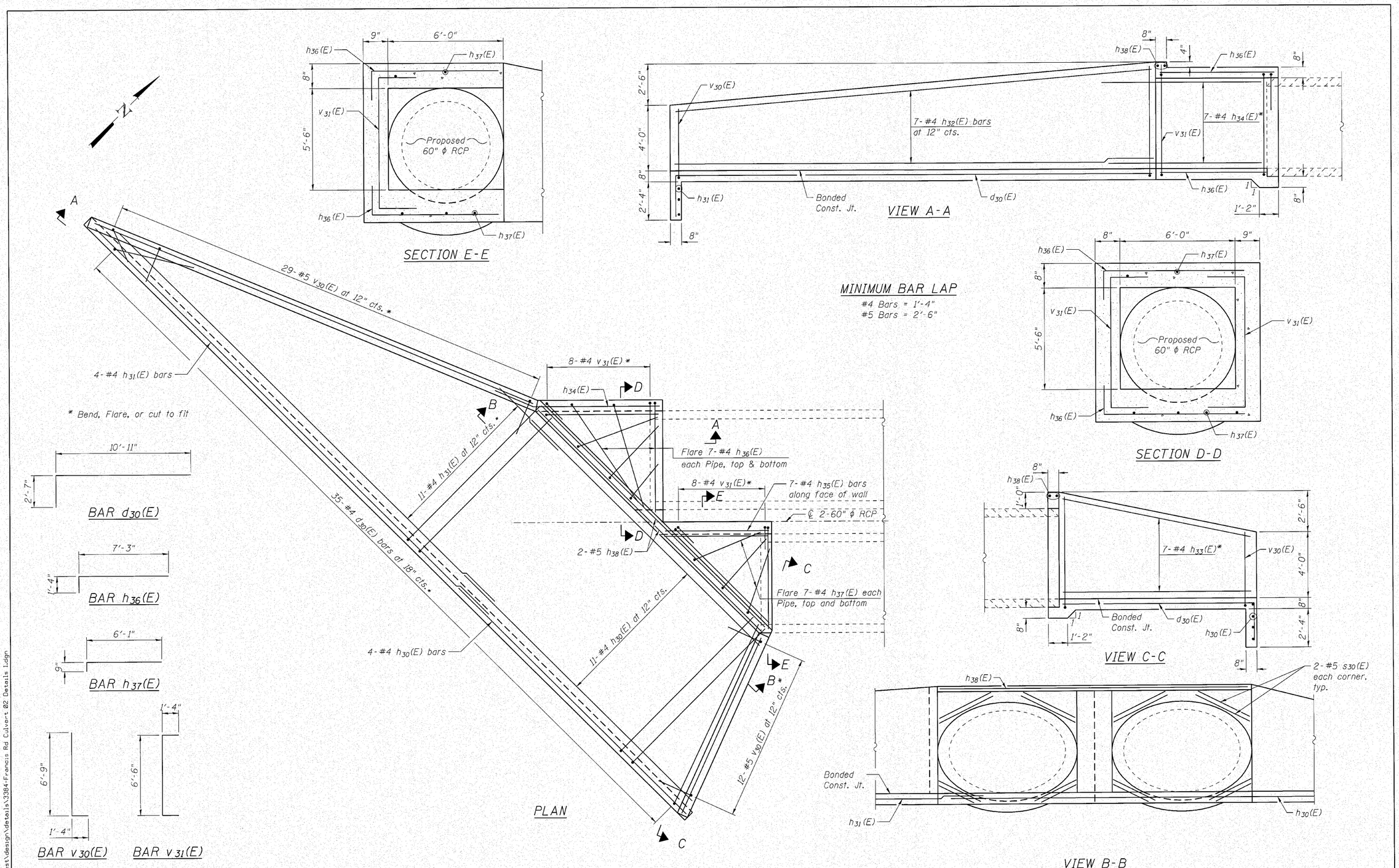

n:\proj\3384\2_west\design\details\3384-Francis Rd Culvert 02 Details 1.dgn

Ciorba Group, Inc. CONSULTING ENGINEERS 5420 North Cumberland Avenue Suite 105 Chicago, Illinois 60656 Tel 773.775.4300 Fax 773.775.4011 Email info@ciorba.com	USER NAME = nthomas	DESIGNED - AMK	REVISED -	STATE OF ILLINOIS DEPARTMENT OF TRANSPORTATION	HEADWALL DETAILS FRANCIS ROAD CULVERT HEADWALL	F.A.I. RTE.	SECTION	COUNTY	TOTAL SHEETS	SHEET NO.
		CHECKED - BWS	REVISED -			80	99-5-Y	WILL	276	192
	PLOT SCALE =	DRAWN - RD	REVISED -					CONTRACT NO. 60147		
	PLOT DATE = 10/27/2010	CHECKED - AMK	REVISED -		SHEET NO. 2 OF 2 SHEETS		ILLINOIS	FED. AID PROJECT		

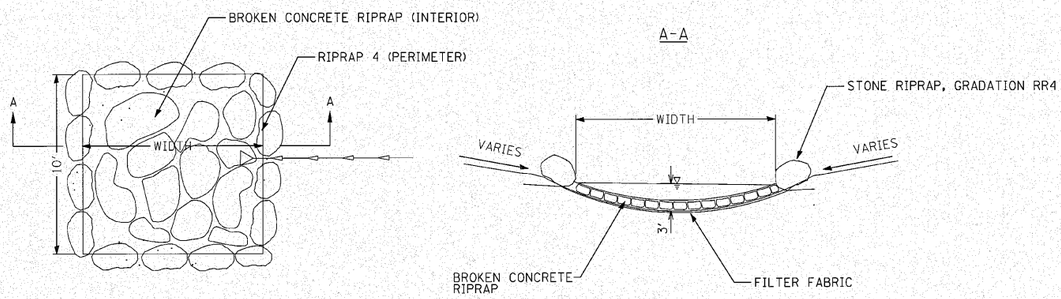

SEDIMENT BASIN DETAIL

DIMENSIONS SHOWN ON PLANS

N:\PROJ\33894-2_West\Design\Details\33894-Detail_Erosion.dgn

ENGINEERING CONSULTANT	USER NAME = ccornwell	DESIGNED - CRC	REVISED -	STATE OF ILLINOIS DEPARTMENT OF TRANSPORTATION	F.A.I. 80 FROM US 30 TO NS RAILROAD SEDIMENT BASIN DETAIL	F.A.I. RTE.	SECTION	COUNTY	TOTAL SHEETS	SHEET NO.
Ciorba Group, Inc. CONSULTING ENGINEERS 5507 North Cumberland Avenue, Suite 402 Chicago, Illinois 60656 Tel: 773.775.4300 Fax 773.775.4014 E-mail chicago@ciorba.com		DRAWN - JMK	REVISED -			80	99-5-Y	WILL	276	193
	PLOT SCALE = 50.0000 ' / IN.	CHECKED - MRJ	REVISED -					CONTRACT NO. 60147		
	PLOT DATE = 10/27/2010	DATE - 10/27/2010	REVISED -		SCALE: SHEET NO. OF SHEETS STA. TO STA.			ILLINOIS FED. AID PROJECT		

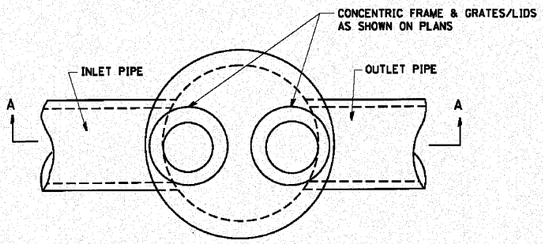

PLAN

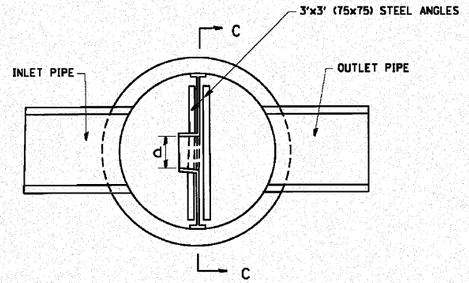

SECTION B-B

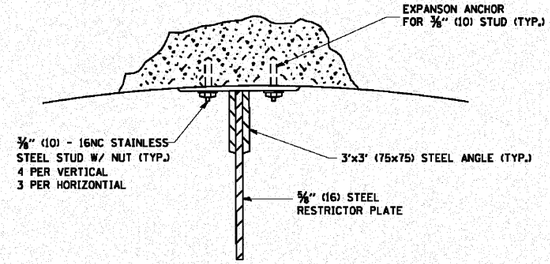

ANGLE FASTENER DETAIL

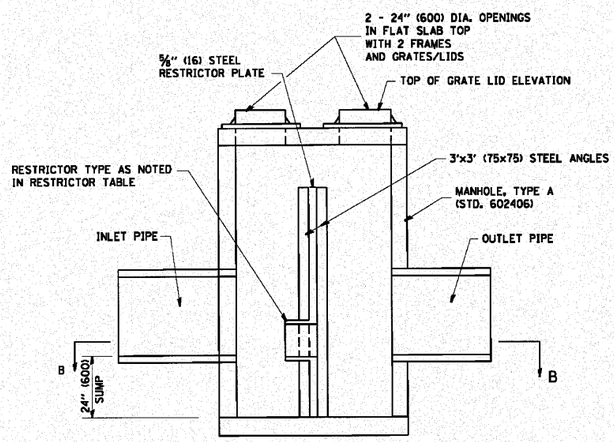

SECTION A-A

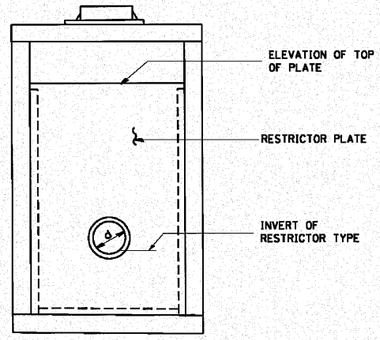

SECTION C-C

NOTES:

1. ALL STEEL ANGLES AND PLATES TO BE GALVANIZED AFTER FABRICATION.
2. ALL RESTRICTOR PLATES, ANGLES AND HARDWARE TO BE INCLUDED IN THE COST OF THE MANHOLE.
3. BASIS OF PAYMENT: "MANHOLES ,TYPE A, 6 FT. (1.8 m)-DIAMETER, TYPE 1 FRAME, CLOSED LID, RESTRICTOR PLATE" EACH

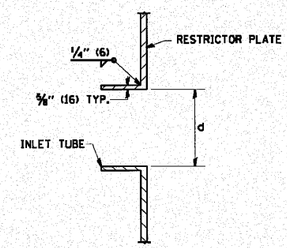

INLET TUBE DETAIL

STATION	MANHOLE DIAMETER	FRAME AND GRATE	RESTRICTOR TYPE	INSIDE RESTRICTOR TYPE DIAMETER in. (mm) (d)	INVERT OF RESTRICTOR TYPE	ELEVATION OF TOP OF PLATE OVERFLOW
771+00	6'	T20	1	24	666.94	669.44
821+00	6'	T20	1	12	685.99	688.00
824+20	6'	T20	1	21	685.79	690.00
868+50	6'	T20	1	20	702.66	705.99
879+00	6'	T20	1	16	685.72	688.89

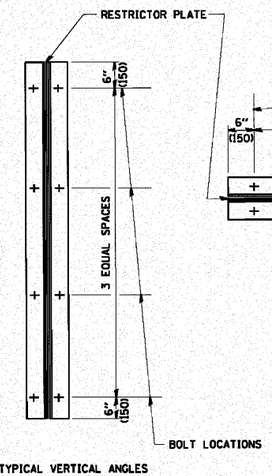

TYPICAL VERTICAL ANGLES
LOOKING TOWARD MANHOLE WALL

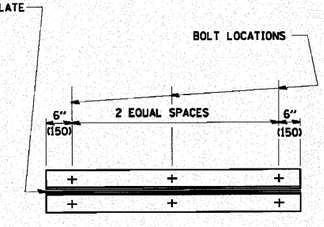

TYPICAL HORIZONTIAL
ANGLES LOOKING TOWARD
BOTTOM OF MANHOLE

TOTAL BOLTS REQUIRED: 22

NOTE:

1. ANGLES SHOULD BE 3x3x3/8 (75x75x75)
2. VERTICAL ANGLES SHOULD EXTEND FROM THE BOTTOM OF THE RESTRICTOR PLATE TO THE TOP.
3. HORIZONTIAL ANGLES SHOULD EXTEND FROM VERTICAL ANGLE TO VERTICAL ANGLE.

STEEL ANGLE BOLTING DETAILS

RESTRICTOR TYPE					
1	2	3	4	5	6
RE-ENTRANT TUBE	SHARP EDGED	SQUARE EDGED	RE-ENTRANT TUBE	SQUARE EDGED	ROUNDED
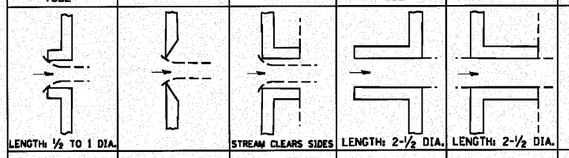					
LENGTH: 1/2 TO 1 DIA.		STREAM CLEARS SIDES	LENGTH: 2-1/2 DIA.	LENGTH: 2-1/2 DIA.	
C=.52	C=.61	C=.61	C=.73	C=.82	C=.98

VALUES OF "C" FOR CIRCULAR
AND SQUARE ORIFICES

ALL DIMENSIONS ARE IN INCHES (MILLIMETERS) UNLESS OTHERWISE SHOWN.

ENGINEERING CONSULTANT
Corba Group, Inc.
CONSULTING ENGINEERS
5227 North Dorchester Avenue, Suite 402
Chicago, Illinois 60640
Tel. 773.775.4005 Fax 773.775.4014
Email chicago@corba.com

USER NAME = geglianobt	DESIGNED - R. SHAH	REVISED - R. SHAH 10-25-94	
	DRAWN -	REVISED - E. GOMEZ 08-28-00	
PLOT SCALE = 50.000 ' / IN.	CHECKED -	REVISED - M. GOMEZ 01-08-01	
PLOT DATE = 1/4/2008	DATE - 09-09-94	REVISED -	

STATE OF ILLINOIS
DEPARTMENT OF TRANSPORTATION

MANHOLE WITH RESTRICTOR PLATE

SCALE: NONE | SHEET NO. 1 OF 1 SHEETS | STA. | TO STA.

F.A.I. RTE.	SECTION	COUNTY	TOTAL SHEETS	SHEET NO.
80	99-5-Y	WILL	276	194
	BD600-04 (BD-12)	CONTRACT NO. 60147		
FED. ROAD DIST. NO. 1	ILLINOIS	FED. AID PROJECT		

n:\proj\2384\2_west\design\details\2384W_Detail02 (Standard).dgn

TANGENT CONDITION

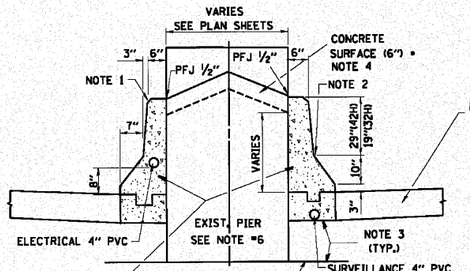

SECT. D-D
CONCRETE BARRIER

CONCRETE BARRIER, SINGLE FACED, 6 INCH TOP WIDTH
42 INCH HEIGHT

FOR SHOULDER DETAILS
SEE TYPICAL SECTIONS

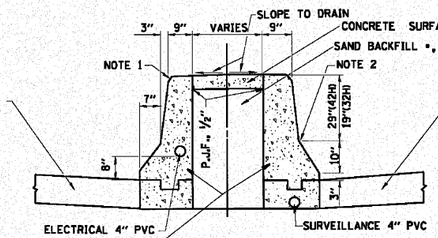

SECT. C-C
CONCRETE BARRIER

CONCRETE BARRIER, SINGLE FACED, 9 INCH TOP WIDTH, 42 INCH HEIGHT

FOR SHOULDER DETAILS
SEE TYPICAL SECTIONS

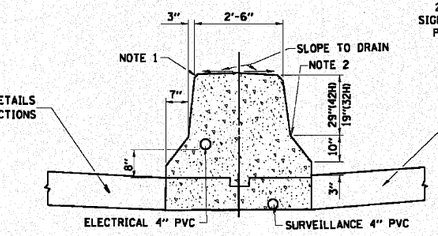

SECT. B-B
CONCRETE BARRIER

CONCRETE BARRIER, DOUBLE FACED
18 INCH VARIABLE TOP WIDTH
42 INCH HEIGHT

2" PVC TO BE INSTALLED BETWEEN SIGN FOUNDATION AND NEAREST LIGHT POLE FOUNDATION WHERE SHOWN ON THE PLANS.

FOR SHOULDER DETAILS
SEE TYPICAL SECTIONS

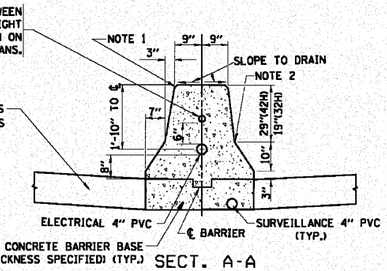

SECT. A-A
CONCRETE BARRIER

CONCRETE BARRIER, DOUBLE FACE,
18 INCH TOP WIDTH,
42 INCH HEIGHT

PLAN VIEW OF CONCRETE BARRIER TRANSITION

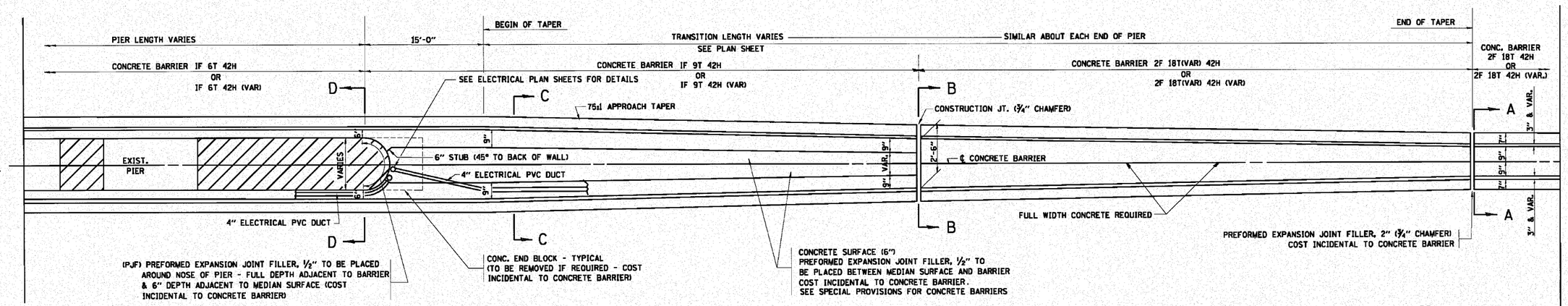

(SUPER ELEVATION CONDITION)

SECT. D-D
CONCRETE BARRIER

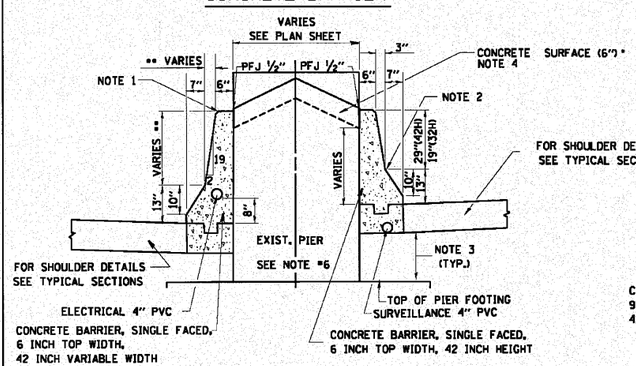

SECT.C-C
CONCRETE BARRIER

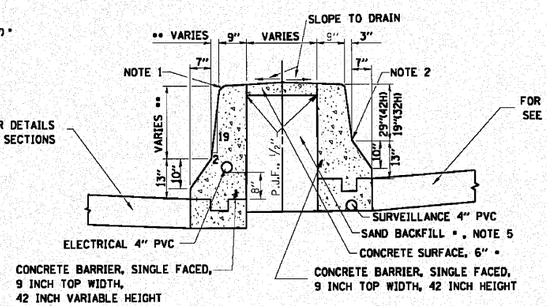

SECT. B-B
CONCRETE BARRIER

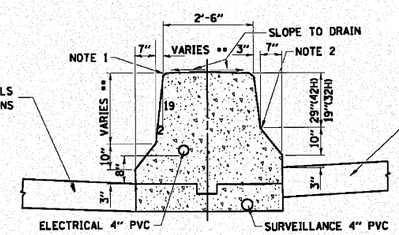

CONCRETE BARRIER, DOUBLE FACE,
18 INCH VARIABLE TOP WIDTH,
42 INCH VARIABLE HEIGHT

SECT. A-A
CONCRETE BARRIER

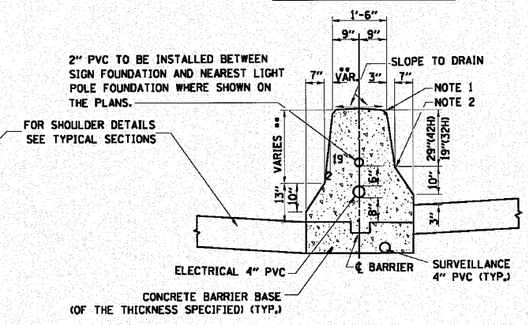

GENERAL NOTES - FOR UNDERDRAIN DETAILS SEE TYPICAL SECTIONS
- PREFORMED JOINT FILLER SHALL BE INCIDENTAL TO THE CONCRETE BARRIER OF THE TYPE INVOLVED.
- FOR KEYWAY (F) DIMENSIONS, SEE TYPICAL SECTIONS
- CONCRETE BARRIER BASE PAY ITEM IS TO BE INCLUDED IF THE BARRIER IS CONSTRUCTED MONOLITHIC OR JOINTED TO BASE. IF JOINTED CONTRACTORS WILL HAVE THE OPTION OF USING A KEYWAY OR * __ TIE BARS AT _____O.C.

NOTE 1 - ¾" CHAMFER OR 1" RADIUS (OPTIONAL)

NOTE 2 - 10" RADIUS (OPTIONAL)

NOTE 3 - EXTEND BOTTOM OF BARRIER TO FOOTING ONLY WHEN DEPTH IS 6" OR LESS, OTHERWISE MAINTAIN SAME DEPTH AS BOTTOM OF SHOULDER

NOTE 4 - PIER FILLER MATERIAL TO BE CONCRETE IF MINIMUM 6" THICKNESS WILL BE MAINTAINED. IF 6" THICKNESS CANNOT BE MAINTAINED USE ASPHALT FILLER MATERIAL AS DIRECTED BY THE ENGINEER.

NOTE 5 - SAND BACKFILL AND CONCRETE SURFACE WILL BE REQUIRED. FILLING WITH CONCRETE WILL NOT BE ALLOWED.

NOTE 6 - IF PIER IS NEW CONSTRUCTION BARRIER WALL MAY BE MONOLITHIC

•• MAINTAIN SLOPE OF FACE AS SHOWN ON DETAIL. HEIGHT AND WIDTH OF BARRIER INCREASE WHERE A DIFFERENCE IN MEDIAN EDGE-OF-PAVEMENT GRADE ELEVATION EXISTS.

* COST OF SAND BACKFILL, CONCRETE SURFACE (6"), AND PIER FILLER MATERIAL WILL NOT BE INCIDENTAL.

ENGINEERING CONSULTANT
Clorba Group, Inc.
CONSULTING ENGINEERS
5007 North Cumberland Avenue, Suite 402
Chicago, Illinois 60656
Tel 773.775.5300 Fax 773.775.4914
Email Chicago@Clorba.com

USER NAME = gaglianobt	DESIGNED - FORD	REVISED - FORD 12-06-88	
	DRAWN -	REVISED -	
PLOT SCALE = 50.0000 ' / IN.	CHECKED -	REVISED -	
PLOT DATE = 1/4/2008	DATE - 09-09-88	REVISED -	

STATE OF ILLINOIS
DEPARTMENT OF TRANSPORTATION

CONCRETE BARRIER TRANSITION &
GENERAL DETAILS, CONCRETE BARRIER BASE

SCALE: NONE | SHEET NO. 1 OF 1 SHEETS | STA. TO STA.

F.A.I. RTE.	SECTION	COUNTY	TOTAL SHEETS	SHEET NO.
80	99-5-Y	WILL	276	195
	BD-27	CONTRACT NO. 60147		
FED. ROAD DIST. NO. 1	ILLINOIS	FED. AID PROJECT		

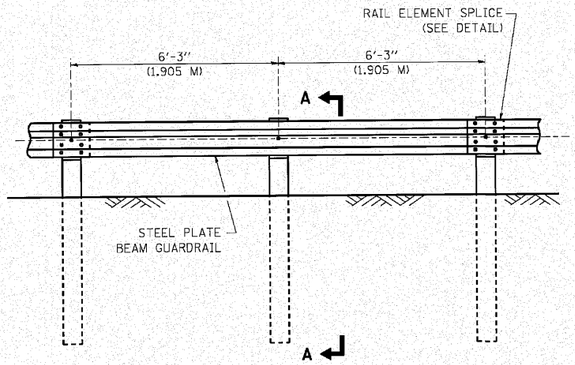

ELEVATION

TYPE A

6'-3" (1.905 M) TYPICAL POST SPACING

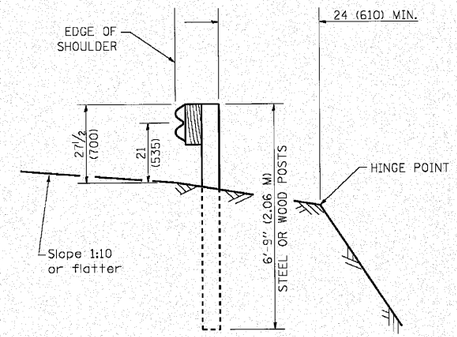

SECTION A-A

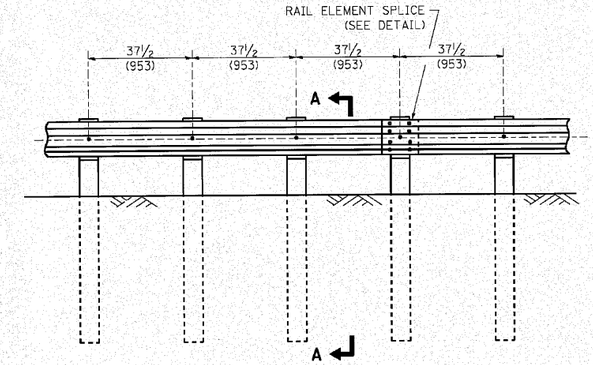

ELEVATION

TYPE A

37½ (953) CLOSED POST SPACING

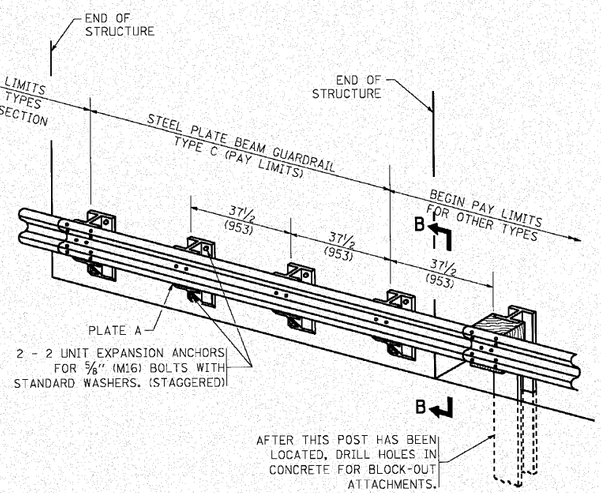

TYPE C

37½ (953) BLOCK-OUT SPACING

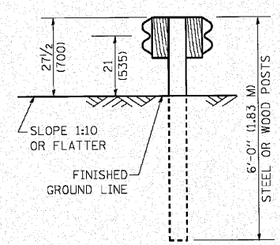

SECTION C-C

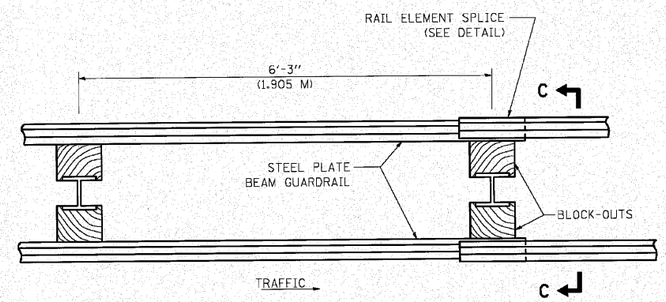

PLAN

TYPE D

DOUBLE STEEL PLATE BEAM GUARDRAIL
6'-3" (1.905 M) TYPICAL POST SPACING

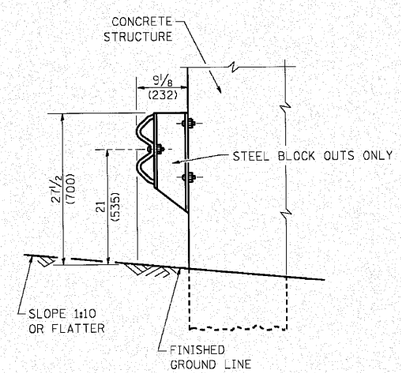

SECTION B-B

GENERAL NOTES

ALL SLOPE RATIOS ARE EXPRESSED AS UNITS OF VERTICAL DISPLACEMENT TO UNITS OF HORIZONTAL DISPLACEMENT (V:H).

ALL DIMENSIONS ARE IN INCHES (MILLIMETERS) UNLESS OTHERWISE SHOWN.

THE EXISTING STEEL POSTS MAY BE DRILLED TO MATCH THE BOLT PATTERN SHOWN HEREIN FOR THE WOOD BLOCK-OUT, OR A NEW STEEL POST SHALL BE PROVIDED.

THIS DETAIL IS APPLICABLE TO THE GUARDRAIL SYSTEM USED PRIOR TO JANUARY 1, 2007. FOR DETAILS ON THE MIDWEST GUARDRAIL SYSTEM, SEE STANDARD 630001.

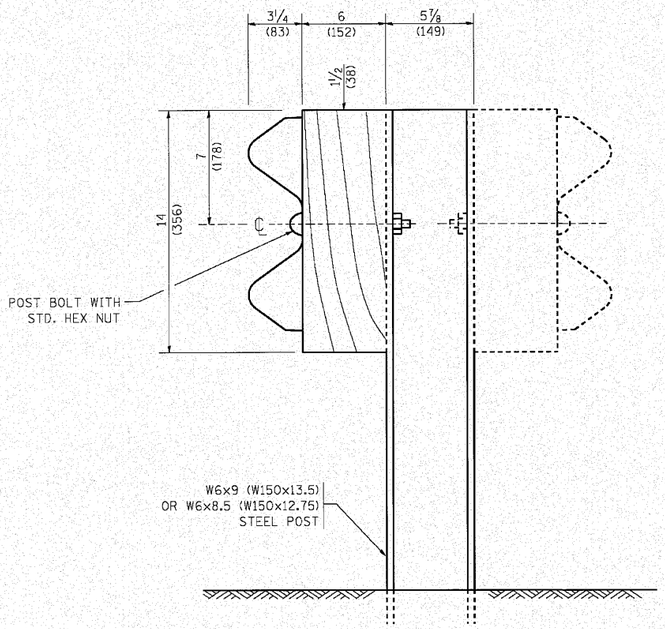

STEEL POST CONSTRUCTION

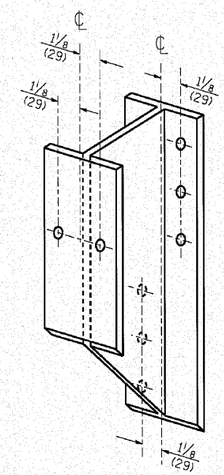

STEEL BLOCK-OUT DETAIL

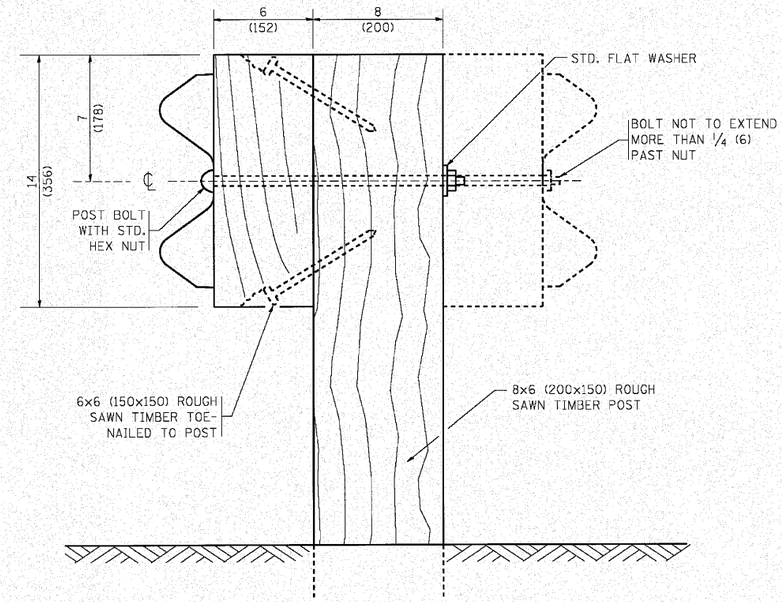

WOOD POST CONSTRUCTION

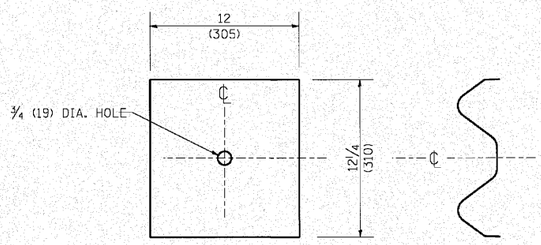

NOTE:

PLATE A SHALL BE PLACED BETWEEN RAIL ELEMENT AND BLOCK-OUT AT NON-SPLICE MOUNTING POINTS ONLY WHEN STEEL BLOCK-OUTS ARE USED.

PLATE A

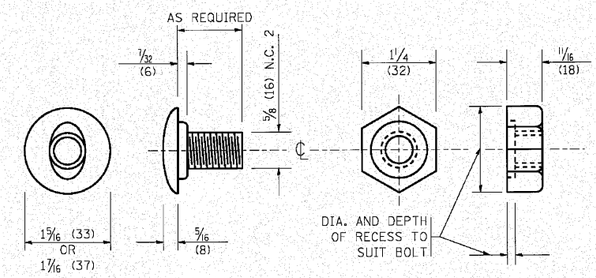

POST OR SPLICE BOLT & NUT

ENGINEERING CONSULTANT Corba Group, Inc. CONSULTING ENGINEERS 5537 North Cumberland Avenue, Suite 402 Chicago, Illinois 60656 Tel: 773.775.4200 - Fax 773.775.4014 Email chicago@corba.com	USER NAME = gaglianobt	DESIGNED -	REVISED - 10-31-06	STATE OF ILLINOIS DEPARTMENT OF TRANSPORTATION	REMOVE AND REERECT STEEL PLATE BEAM GUARDRAIL	F.A.I. RTE. 80	SECTION 99-5-Y	COUNTY WILL	TOTAL SHEETS 276 / SHEET NO. 197
		DRAWN -	REVISED -						
	PLOT SCALE = 50.0000 ' / IN.	CHECKED -	REVISED -			BM-21		CONTRACT NO. 60147	
	PLOT DATE = 1/4/2008	DATE -	REVISED -		SCALE: NONE / SHEET NO. 2 OF 4 SHEETS / STA. / TO STA.	FED. ROAD DIST. NO. 1	ILLINOIS	FED. AID PROJECT	

mkerson\33841\2_west\design\details\3384W-Detail04B (Standard).dgn

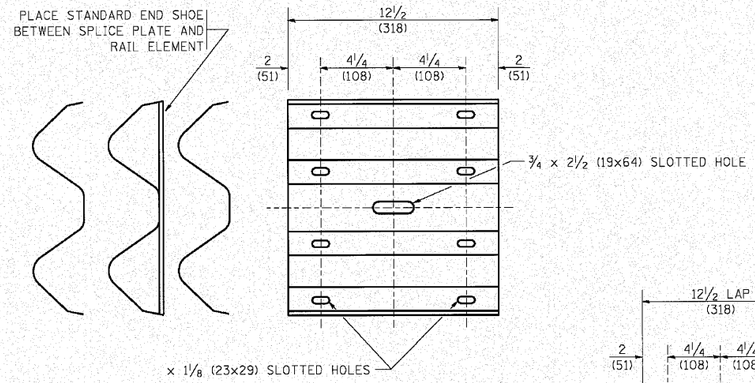

SPLICE PLATE

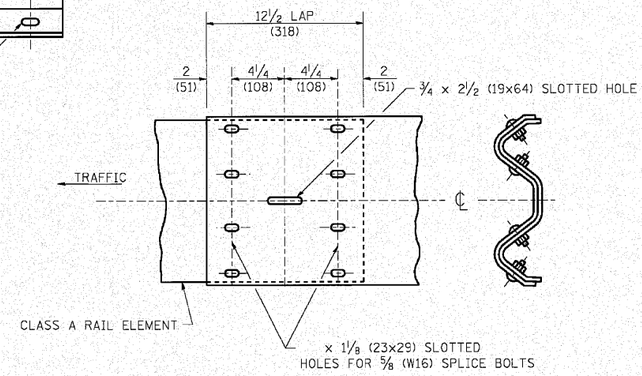

RAIL ELEMENT SPLICE

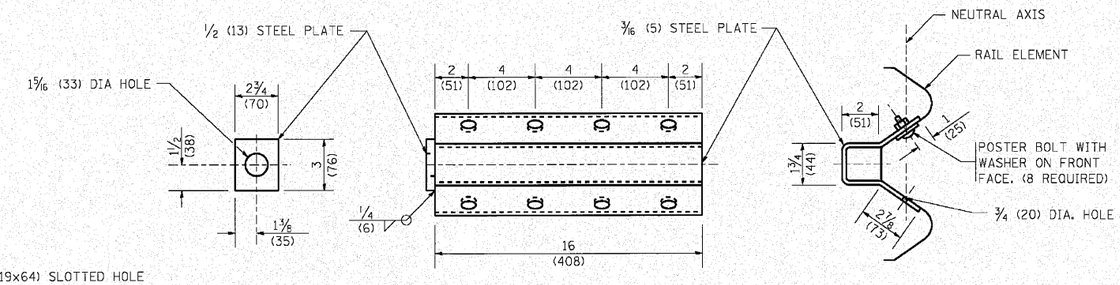

NOTE:

ANCHOR PLATE T SHALL BE USED TO ATTACH CABLE ASSEMBLY TO GUARDRAIL WHEN REQUIRED ON TRAFFIC BARRIER TERMINALS.

ANCHORE PLATE T DETAILS

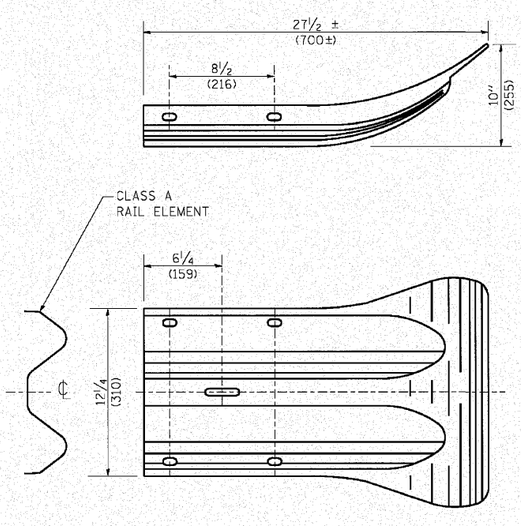

END SECTION

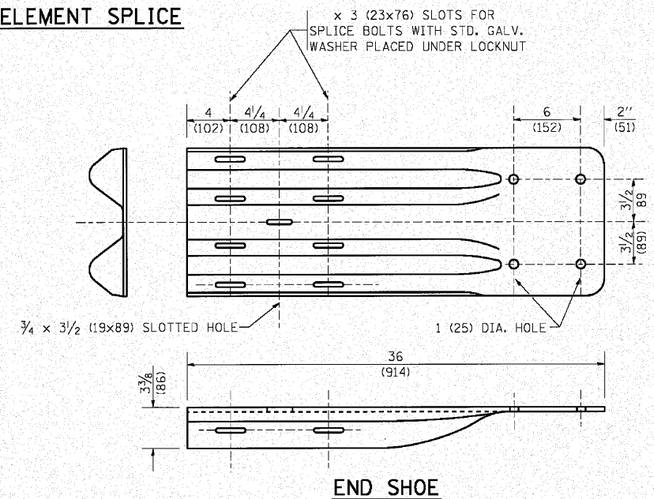

END SHOE

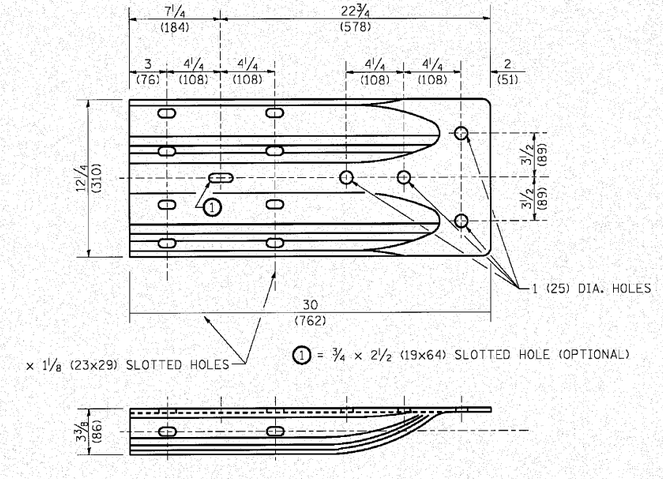

ALTERNATE END SHOE

NOTE:

WHEN END SHOE IS ATTACHED TO A BRIDGE PARAPET WHICH HAS AN EXPANSION JOINT, THE BOLTS SHALL BE PROVIDED WITH A LOCKNUT OR DOUBLE NUT AND SHALL BE TIGHTENED ONLY TO A POINT THAT WILL ALLOW GUARDRAIL MOVEMENT.

THE STANDARD END SHOE SHALL BE ATTACHED TO THE CONCRETE WITH PRE-DRILLED OR SELF-DRILLING ANCHOR BOLTS. THE ANCHOR CONE SHALL BE SET FLUSH WITH THE SURFACE OF THE CONCRETE.

EXTERNALLY THREADED STUDS PROTRUDING FROM THE SURFACE OF THE CONCRETE WILL NOT BE PERMITTED.

ENGINEERING CONSULTANT
Clorba Group, Inc.
CONSULTING ENGINEERS
9501 North Gumbaugh Avenue, Suite 402
Niles, Illinois 60714
Tel. 773.775.6026 Fax 773.775.6014
Email: clorba@clorba.com

USER NAME = geglianobt	DESIGNED -	REVISED - 10-31-06	
	DRAWN -	REVISED -	
PLOT SCALE = 50.0000 ' / IN.	CHECKED -	REVISED -	
PLOT DATE = 1/4/2008	DATE -	REVISED -	

STATE OF ILLINOIS
DEPARTMENT OF TRANSPORTATION

REMOVE AND REERECT
STEEL PLATE BEAM GUARDRAIL

SCALE: NONE | SHEET NO. 3 OF 4 SHEETS | STA. | TO STA.

F.A.I. RTE.	SECTION	COUNTY	TOTAL SHEETS	SHEET NO.
80	99-5-Y	WILL	276	198
	BM-21	CONTRACT NO. 60147		
FED. ROAD DIST. NO. 1	ILLINOIS	FED. AID PROJECT		

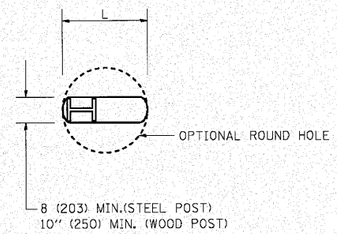

PLAN

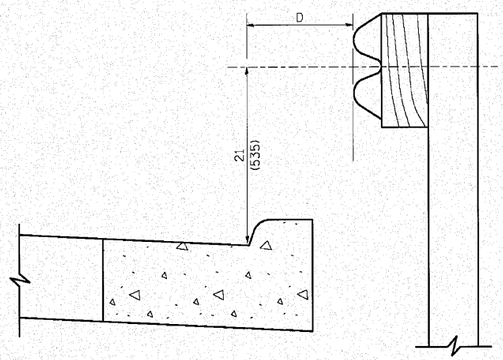

NOTE:

IF IT IS NECESSARY FOR D TO BE MORE THAN 12 (300) AND LESS THAN 10'-0" (3.0 M) TYPE M-2 (M-5) CURB AND GUTTER (STD. 606001) SHALL BE USED IN FRONT OF AND IN ADVANCE OF THE GUARDRAIL.

GUARDRAIL PLACED BEHIND CURB

(D = 0 DESIRABLE TO 12 (300) MAXIMUM)

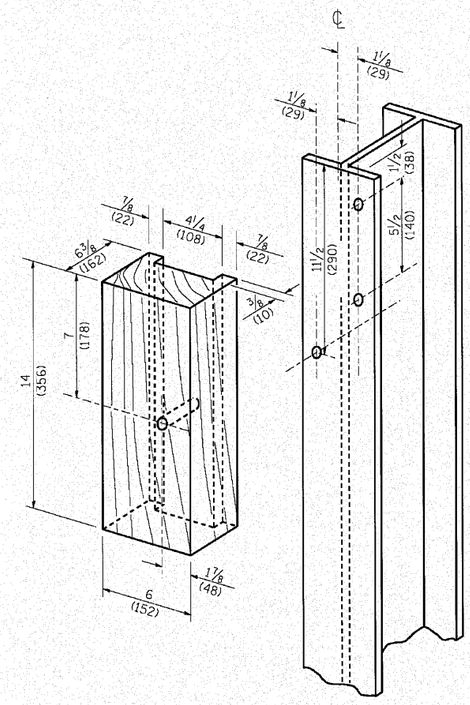

WOOD BLOCK-OUT AND STEEL POST DETAILS

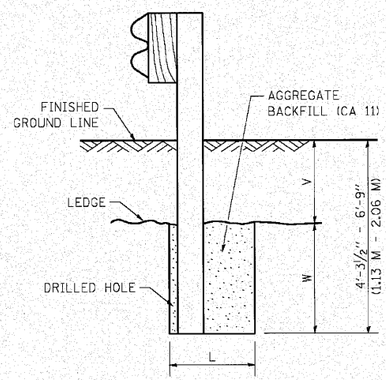

NOTE:

LEDGE LINE IS TOP OF ROCK
LEDGE OR HARD SLAG FILL.

ELEVATION

FOOTING FOR POST WHEN IMPERVIOUS MATERIAL IS ENCOUNTERED

V	W	L	
		STEEL POST	WOOD POST
0 - 18 (0 - 460)	24 (610)	21 (530)	23 (580)
>18 - 41.5 (> 460 - 825)	12 (305)	8 (203)	10 (250)
>41.5 - 53.5 (> 825 - 1.13 M)	12 - 0 (350 - 0)	8 (203)	10 (250)

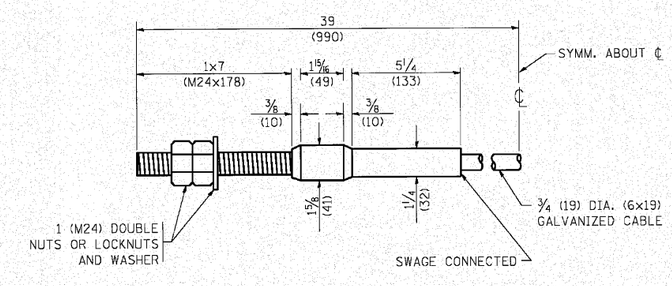

CABLE ASSEMBLY

(40,000 LBS (18,100 KG) MIN. BREAKING STRENGTH)
TIGHTEN TO TAUT TENSION

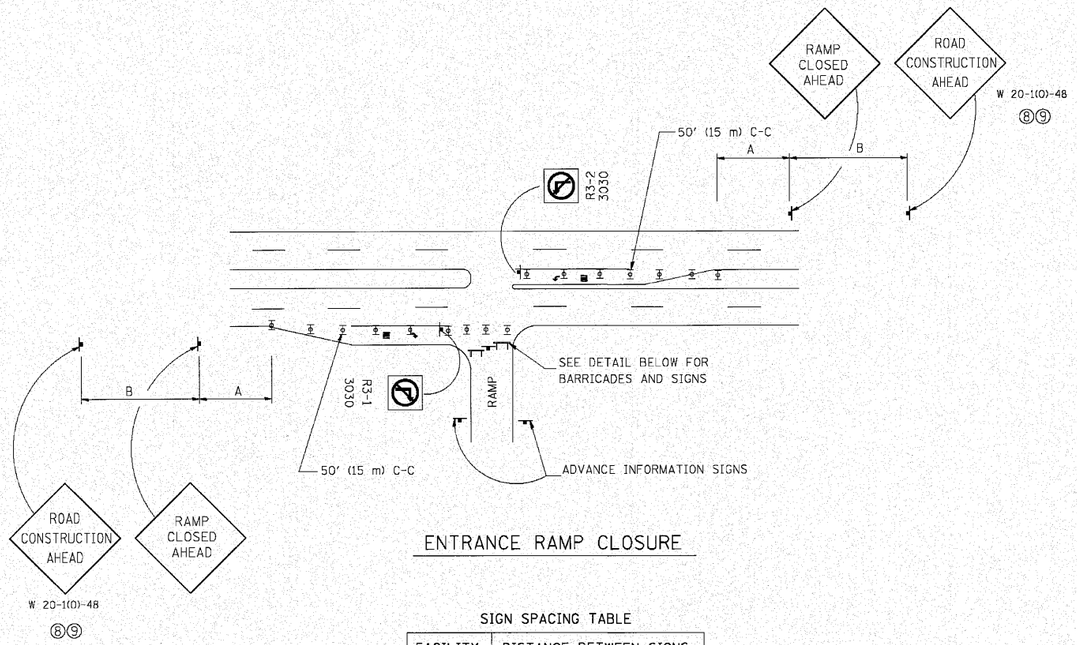

ENTRANCE RAMP CLOSURE

SIGN SPACING TABLE

FACILITY	DISTANCE BETWEEN SIGNS	
	A	B
EXPRESSWAY >24 HOURS	1000' (300 m)	1500' (450 m)
EXPRESSWAY <24 HOURS	500' (150 m)	500' (150 m)
ARTERIAL ≥45 MPH	350' (100 m)	350' (100 m)
ARTERIAL <45 MPH	150' (45 m)	150' (45 m)

DISTANCES MAY BE SHORTENED DEPENDING UPON THE PROXIMITY OF ADJACENT RAMPS OR INTERSECTIONS.

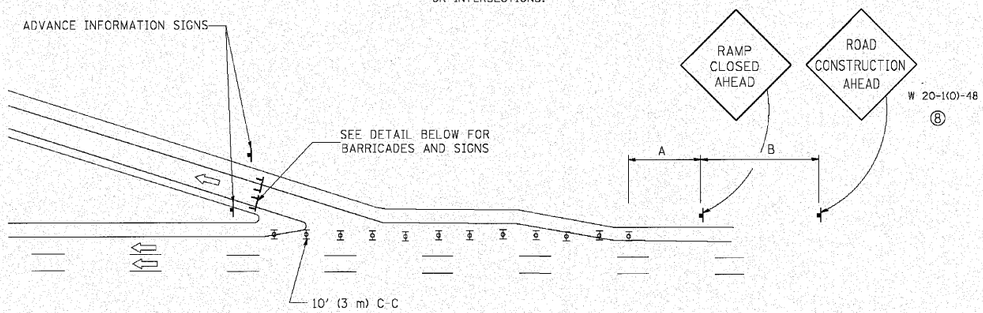

EXIT RAMP CLOSURE

SYMBOLS

TYPE II BARRICADE, DRUM OR VERTICAL BARRICADE WITH STEADY BURN MONO-DIRECTIONAL LIGHT

TYPE III BARRICADE WITH FLASHING LIGHT

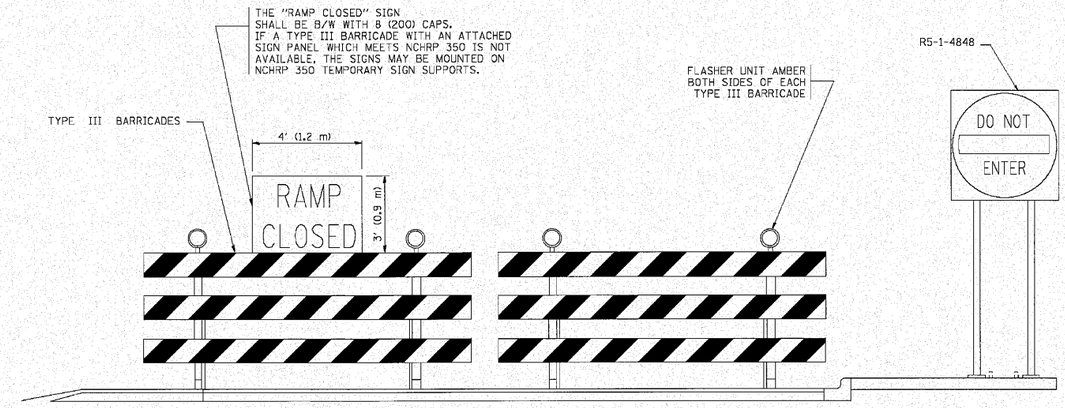

DETAIL FOR REQUIRED BARRICADES & SIGNS

RAMP CLOSURE ADVANCE WARNING SIGN

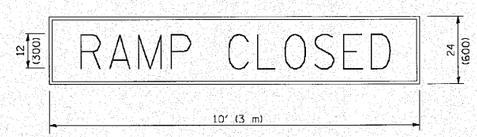

BLACK LEGEND ON ORANGE REFLECTORIZED BACKGROUND

1 (25) BORDER

THESE SIGNS ARE REQUIRED ON ALL THE EXIT GUIDE SIGNS FOR THE CLOSED EXIT RAMPS.

RAMP CLOSURE ADVANCE INFORMATION SIGN

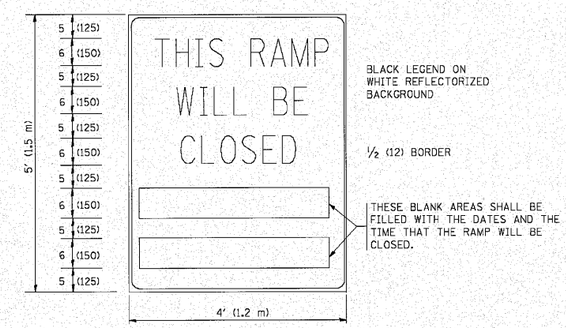

THESE SIGNS ARE REQUIRED ON BOTH SIDES OF THE RAMP, MINIMUM OF 1 WEEK IN ADVANCE OF THE CLOSURE.

GENERAL NOTES:

1. CONES MAY BE SUBSTITUTED FOR DRUMS OR TYPE II BARRICADES DURING DAY OPERATIONS. CONES SHALL BE A MINIMUM OF 28 (700) HIGH.
2. STEADY BURN LIGHTS WILL NOT BE REQUIRED FOR DAY OPERATIONS.
3. A FLAGGER SHALL BE POSITIONED AT EACH CLOSED RAMP THAT IS OPEN TO CONSTRUCTION VEHICLES.
4. ALL ROUTE MARKERS AND TRAILBLAZER ASSEMBLIES WHICH DIRECT MOTORISTS TO A CLOSED ENTRANCE RAMP SHALL BE COVERED.
5. THE SIGNING AND BARRICADING WHICH IS REQUIRED BY THIS DETAIL SHALL BE INCLUDED IN THE COST OF TRAFFIC CONTROL AND PROTECTION (EXPRESSWAYS).
6. AUTHORIZATION FROM THE DISTRICT'S BUREAU OF TRAFFIC IS REQUIRED FOR ALL RAMP CLOSURES.
7. THE RAMP CLOSURE ADVANCE INFORMATION SIGNS SHALL BE ERECTED IF THE CLOSURE TIME EXCEEDS TWENTY- FOUR 24 HOURS. ADDITIONAL ADVANCE WARNING SIGNS ON EXIT GUIDE SIGNING WILL BE REQUIRED FOR EXIT RAMP CLOSURES THAT EXCEED TWENTY FOUR 24 HOURS IN LENGTH.
8. ROAD CONSTRUCTION AHEAD SIGNS MAY BE OMITTED WHEN THIS DETAIL IS USED IN CONJUNCTION WITH OTHER TRAFFIC CONTROL THAT ALREADY INCLUDES A ROAD CONSTRUCTION AHEAD SIGN.
9. ARTERIAL ROAD CONSTRUCTION AHEAD SIGNS MAY BE OMITTED ON CLOSURES LESS THAN 24 HOURS IN DURATION.

ALL DIMENSIONS ARE IN INCHES (MILLIMETERS) UNLESS OTHERWISE SHOWN.

ENGINEERING CONSULTANT
Clarke Group, Inc.
CONSULTING ENGINEERS
5407 North Cumberland Avenue, Suite 402
Chicago, Illinois 60656
Tel 773.775.0505 Fax 773.775.4214
Email clarkegroup@clarke.com

USER NAME = leyoo	DESIGNED - DWS	REVISED - DWS/JAF 12-02	
	DRAWN -	REVISED - JAF 02-06	
PLOT SCALE = 50.000 ' / IN.	CHECKED -	REVISED - SPB 01-07	
PLOT DATE = 1/26/2010	DATE - 02-83	REVISED - SPB 12-09	

STATE OF ILLINOIS
DEPARTMENT OF TRANSPORTATION

FREEWAY ENTRANCE AND EXIST RAMP
CLOSURE DETAILS

SCALE: NONE | SHEET NO. 1 OF 1 SHEETS | STA. | TO STA.

F.A.I. RTE.	SECTION	COUNTY	TOTAL SHEETS	SHEET NO.
80	99-5-Y	WILL	276	200
	TC-08	CONTRACT NO. 60147		

FED. ROAD DIST. NO. 1 | ILLINOIS | FED. AID PROJECT