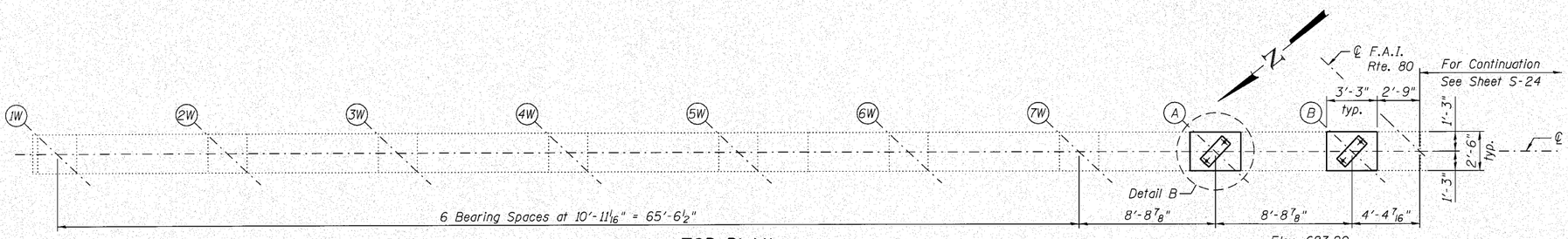

TOP PLAN

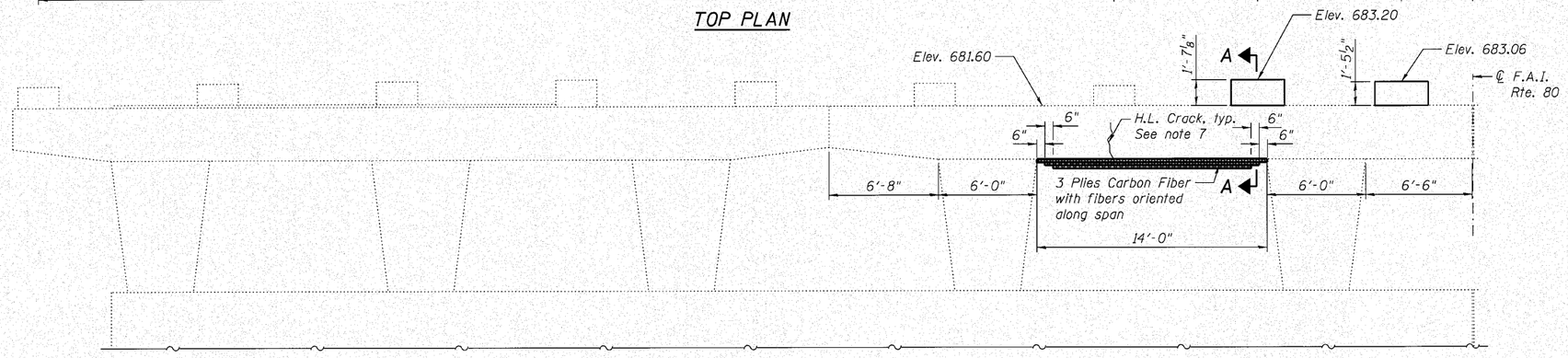

PIER 1 ELEVATION
(Looking East)

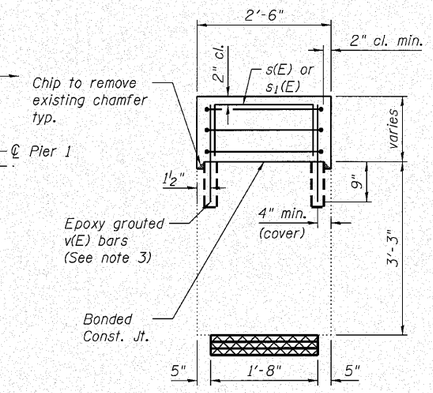

SECTION A-A

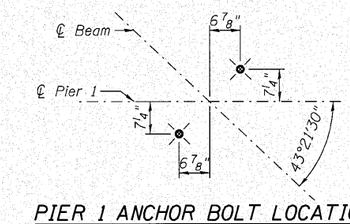

PIER 1 ANCHOR BOLT LOCATIONS

LEGEND:

Areas of Structural Repair of Concrete

Area of Fiber Wrap Repair

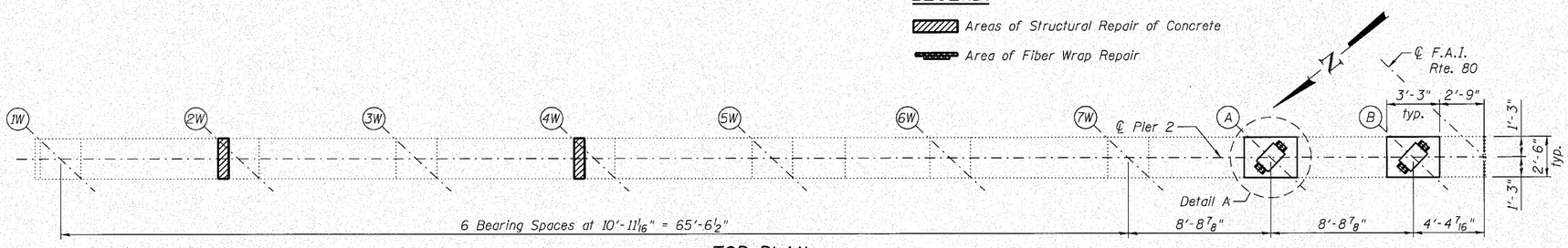

TOP PLAN

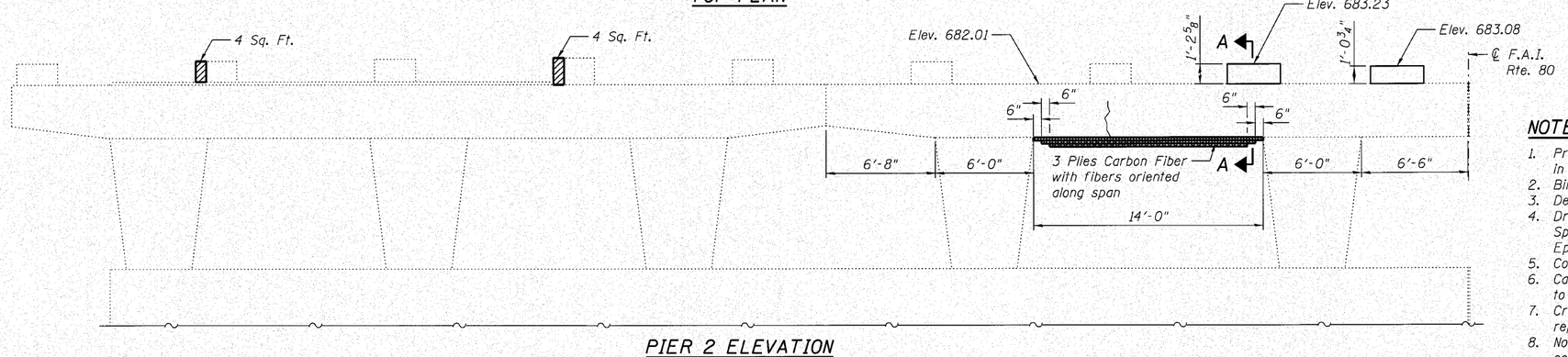

PIER 2 ELEVATION
(Looking East)

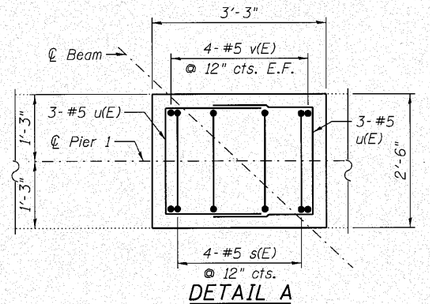

DETAIL A

MINIMUM CURED LAMINATE PROPERTIES

f_{fu} = 550,000 psi
E_f = 33,000,000 psi
Ply thickness = 0.0130"

NOTES:

1. Prior to ordering any material the contractor shall verify in the field all bearing height and shim thickness dimensions.
2. Bill of Material and Bar dimensions shown on Sheet S-24.
3. Detail B shown on sheet S-24.
4. Drill and grout bars according to section 584 of the Standard Specification. Cost included with cost of Reinforcement Bars Epoxy Coated.
5. Concrete Sealer to be applied on all surfaces of new concrete.
6. Carbon Fiber Repair shall be performed after deck removal and prior to the erection of Structural Steel and pouring of the new deck.
7. Cracks to be sealed using epoxy crack injection prior to fiber wrap repair. See Fiber Wrap Special Provisions.
8. No jacking or temporary supprot of the cap will be required. If the contractor proposes a different construction sequence, design plans and calculations have to be submitted for Engineer's approval.

n:\proj\3384\3_east\design\structural\i-80 over n&s\cad\3384_I-80 N&S 23 Existing Pier I.dgn

FILE NAME = Clorba Group, Inc. CONSULTING ENGINEERS 5607 North Cumberland Avenue Suite 400 Chicago, Illinois 60656 Tel: 773.775.4000 Fax: 773.775.4014 Email: chicago@clorba.com	USER NAME = rdanley	DESIGNED - BWS	REVISED -	STATE OF ILLINOIS DEPARTMENT OF TRANSPORTATION	WEST BOUND PIER REPAIRS STRUCTURE NO. 099-0070 (E.B.) & 099-0071 (W.B.)	F.A.I. RTE. 80	SECTION 99(5&5-1) Y-1	COUNTY WILL	TOTAL SHEETS 309 / SHEET NO. 211
		CHECKED - EKM	REVISED -					CONTRACT NO. 60M59	
	PLOT SCALE =	DRAWN - RD	REVISED -						
	PLOT DATE = 10/28/2010	CHECKED - SCD	REVISED -		SHEET NO. S-23 OF S-27 SHEETS		ILLINOIS FED. AID PROJECT		