SIGN LEGEND

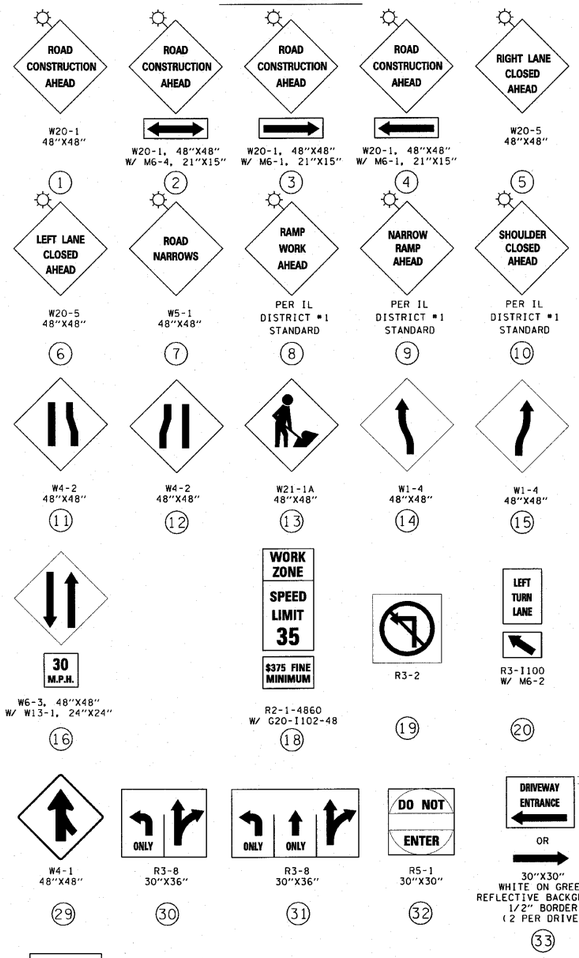

GENERAL NOTES FOR MAINTENANCE OF TRAFFIC

1. TEMPORARY TRAFFIC SIGNALS SHALL BE IN PLACE AND OPERATIONAL AT THE FOLLOWING INTERSECTIONS.

   US ROUTE 20 (LAKE STREET)/YORK ROAD
   US ROUTE 20 (LAKE STREET)/EASTBOUND RAMP TO 290

2. THE CONTRACTOR SHALL MAINTAIN A MINIMUM OF ONE THROUGH TRAFFIC LANE IN EACH DIRECTION ON US ROUTE 20 (LAKE STREET), YORK ROAD.

3. THE EXACT NUMBER, LOCATION, AND SPACING OF ALL SIGNS AND TRAFFIC CONTROL DEVICES MAY BE ADJUSTED TO FIT FIELD CONDITIONS AS DIRECTED BY THE ENGINEER.

4. THE RESIDENT ENGINEER SHALL CONTACT THE TRAFFIC CONTROL SUPERVISOR AT (847) 705-4470 A MINIMUM OF 72 HOURS PRIOR TO THE PLACEMENT OF ANY TEMPORARY TRAFFIC CONTROL DEVICES

5. TEMPORARY CONCRETE BARRIER SHALL BE PLACED BETWEEN RAMP F CONSTRUCTION AND I-290 IN STAGE I AND AT LOCATIONS DIRECTED BY THE ENGINEER. THIS WORK SHALL BE IN ACCORDANCE WITH SECTION 704 OF THE STANDARD SPECIFICATIONS.

6. ALL STOP SIGNS SHALL BE RELOCATED AS NEEDED DURING THE PROJECT.

7. TEMPORARY PAVEMENT SHALL BE CONSTRUCTED IN ACCORDANCE WITH THE SPECIAL PROVISION "TEMPORARY PAVEMENT".

8. THE CONTRACTOR WILL BE REQUIRED TO PROVIDE AND MAINTAIN ACCESS TO ALL PRIVATE AND COMMERCIAL PROPERTY DURING THE CONSTRUCTION PERIOD. ACCESS TO THESE PROPERTIES IS DESIGNATED AS "TEMPORARY DRIVEWAY" AND SHALL BE CONSTRUCTED AS SPECIFIED IN THE SPECIAL PROVISIONS. A SCHEDULE OF DRIVEWAY LOCATIONS IS PROVIDED IN THE SCHEDULE OF QUANTITIES. THE CONTRACTOR MUST ALSO PROVIDE SIGNING FOR ALL DRIVEWAY ENTRANCES (SIGN (33), 2 PER DRIVEWAY), AS OUTLINED IN DISTRICT DETAIL TC-26

9. DELETED

10. DELETED

11. SIGN (41) SHALL BE PAID FOR UNDER THE PAY ITEM "CHANGEABLE MESSAGE SIGN".

12. PLACE ALL SIGNING, BARRICADES, AND LANE CLOSURES ACCORDING TO DISTRICT DETAILS OR APPLICABLE ILLINOIS DEPARTMENT OF TRANSPORTATION HIGHWAY STANDARDS.

13. A MINIMUM OF ONE ENTRANCE SHALL BE MAINTAINED FOR ALL COMMERCIAL PROPERTIES. SOME BUSINESSES WITHOUT TWO DRIVES OR WITH NARROW ACCESS WILL HAVE TO SHARE PARKING WITH ADJACENT BUSINESSES, THE CONTRACTOR SHALL NOTIFY THESE BUSINESSES WITH AT LEAST 48 HOURS NOTICE. SINGLE ACCESS DRIVEWAYS SHALL BE STAGE CONSTRUCTED WHERE POSSIBLE.

14. ALL DRIVEWAYS ARE TO BE OPENED AT THE END OF EACH WORK DAY EXCEPT WHEN CURB AND CONCRETE APPROACHES ARE BEING PLACED AND DURING THE TIME NEEDED FOR THE CONCRETE TO CURE, OTHERWISE THE CONTRACTOR IS TO PROVIDE TEMPORARY ACCESS.

15. MAINTAIN PEDESTRIAN ACCESS TO BUSINESSES AT ALL TIMES DURING CONSTRUCTION.

16. NO OVERNIGHT LANE CLOSURES WILL BE PERMITTED DURING THE MONTHS OF NOVEMBER, DECEMBER, JANUARY, AND FEBRUARY ON US 20 (LAKE ST.) WITHOUT THE APPROVAL OF THE ENGINEER

TEMPORARY PAVEMENT TYPICAL SECTION

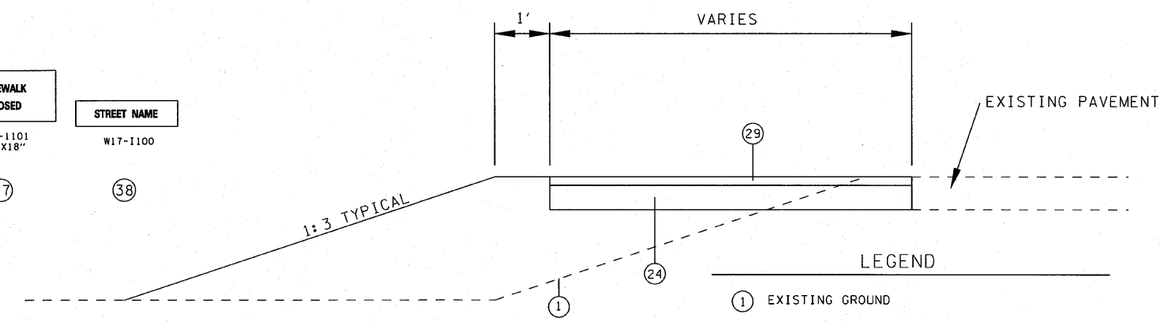

LEGEND

(1) EXISTING GROUND

(24) PROP. HOT-MIX ASPHALT BASE COURSE (8")

(29) PROP. HOT-MIX ASPHALT CONCRETE SURFACE COURSE, MIX "D", N50 (2")

NOTE: SEE MAINTENANCE OF TRAFFIC STAGING PLANS FOR LOCATIONS OF TEMPORARY PAVEMENT.

* SEE SHEET NO. 187 FOR TEMPORARY INFORMATION SIGN DETAILS

SEE SHEET NO. 78 FOR SIGNS 50 THRU 54 DETAILS

FILE NAME = $FILEL$	USER NAME = mreempfer	DESIGNED -	REVISED -	STATE OF ILLINOIS DEPARTMENT OF TRANSPORTATION	MAINTENANCE OF TRAFFIC GENERAL NOTES	F.A.U. RTE.	SECTION	COUNTY	TOTAL SHEETS	SHEET NO.
		DRAWN - BLV	REVISED -			3537	(4Y&22-3)R-2	DUPAGE	284	55
	PLOT SCALE = 50.0000 ' / IN.	CHECKED - SRG	REVISED -					CONTRACT NO. 62093		
	PLOT DATE = 6/18/2010	DATE - 1/18/10	REVISED -		SCALE: N.T.S. / SHEET NO. 55 OF SHEETS / STA. / TO STA.	FED. ROAD DIST. NO.	ILLINOIS	FED. AID PROJECT		