CONTRACT NO. 62478

F.A.P. RTE.	SECTION	COUNTY	TOTAL SHEETS	SHEET NO.
353	(12&13)WRS-4	WILL	608	171
STA. 435+00		TO STA. 450+00		
FED. ROAD DIST. NO. 1	ILLINOIS	FED. AID PROJECT		

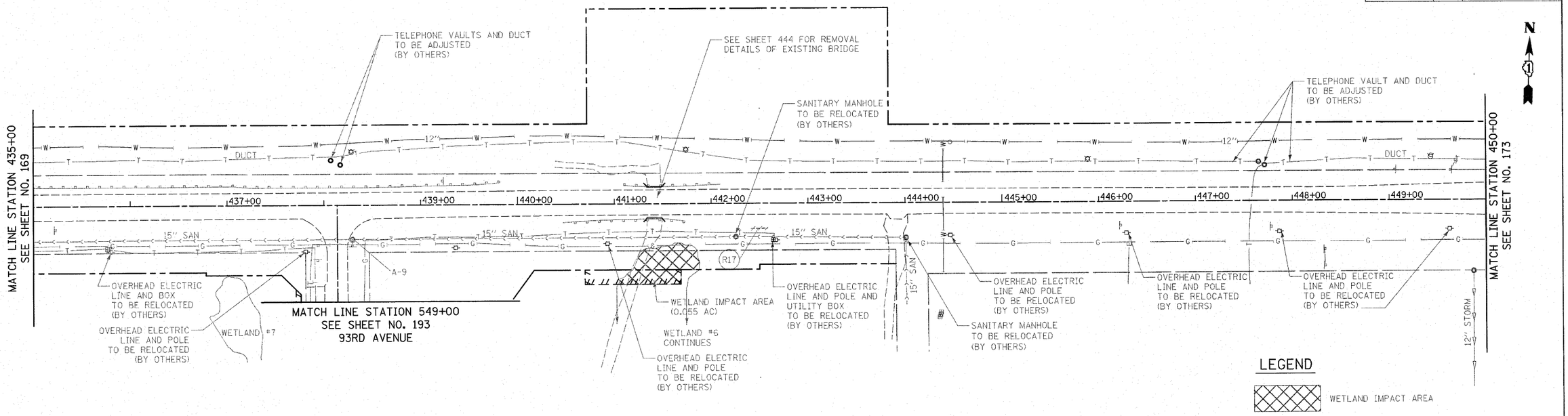

EXISTING U.S. ROUTE 30

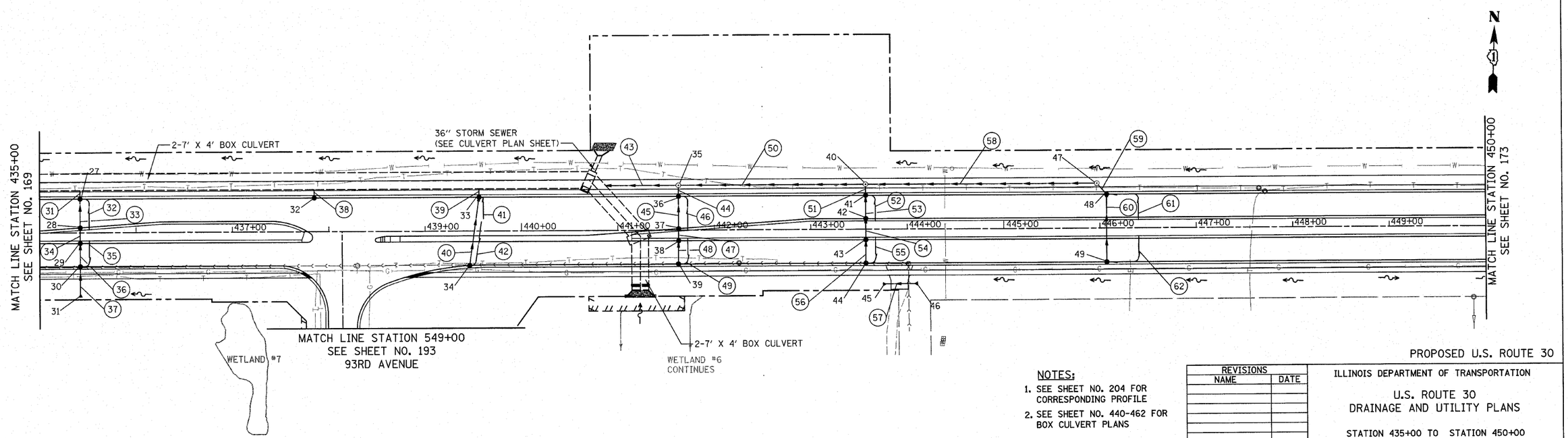

PROPOSED U.S. ROUTE 30

NOTES:

1. SEE SHEET NO. 204 FOR CORRESPONDING PROFILE
2. SEE SHEET NO. 440-462 FOR BOX CULVERT PLANS

REVISIONS	
NAME	DATE

ILLINOIS DEPARTMENT OF TRANSPORTATION

U.S. ROUTE 30
DRAINAGE AND UTILITY PLANS

STATION 435+00 TO STATION 450+00

50 0 50
SCALE IN FEET

DATE 6/11/2010

DRAWN BY DJK
CHECKED BY JRV