PAVEMENT DESIGN INFORMATION
CLASS II ROADWAY
STRUCTURAL DESIGN TRAFFIC (ADT) DESIGN YEAR 2030 PV: 8,100 / SU: 450 / MU: 450
SUBGRADE SUPPORT RATING: POOR
FLEXIBLE TRAFFIC FACTOR: 2.25
DESIGN PAVEMENT HMA TEMP: 78.5°F
DESIGN HMA MODULUS = 500 ksi
DESIGN HMA MICROSTRAIN: 82.5
PAVEMENT COMPOSITION: 2" -- HOT-MIX ASPHALT SURFACE COURSE, MIX "D", N50 10" -- HOT-MIX ASPHALT BINDER COURSE, IL-19.0, N50 12" -- AGGREGATE SUBGRADE, 12"

HOT-MIX ASPHALT MIXTURE REQUIREMENTS	
MIXTURE TYPE	AIR VOIDS @ NDES
FULL-DEPTH PAVEMENT & BRIDGE APPROACH PAVEMENT CONNECTOR (FLEXIBLE)	
HOT-MIX ASPHALT SURFACE COURSE, MIX "D", N50 (IL 9.5 MM), 2"	4% @ 50 GYR.
HOT-MIX ASPHALT BINDER COURSE, IL-19.0, N50, 10"	4% @ 50 GYR.
HOT-MIX ASPHALT SHOULDERS (HMA BINDER IL-19mm), 6"	2% @ 30 GYR.

NOTES:
1. THE UNIT WEIGHT USED TO CALCULATE ALL HMA SURFACE MIXTURE QUANTITIES IS 112 LBS/SQ YD/IN.
2. THE "AC TYPE" FOR POLYMERIZED HMA MIXES SHALL BE "SBS/SBR PG 70-22" AND FOR NON-POLYMERIZED HMA THE "AC TYPE" SHALL BE "PG 64-22" UNLESS MODIFIED BY DISTRICT ONE SPECIAL PROVISIONS. FOR "PERCENT OF RAP," SEE DISTRICT ONE SPECIAL PROVISIONS

LEGEND

1. HOT-MIX ASPHALT SURFACE COURSE, MIX "D", N50 (2")
2. HOT-MIX ASPHALT BINDER COURSE, IL-19.0, N50 (10") [ADD IN 4 LIFTS]
3. AGGREGATE SUBGRADE, 12"
4. HOT-MIX ASPHALT SHOULDERS, 6" [ADD IN 2 LIFTS]
5. AGGREGATE SHOULDERS, TYPE B 6"
6. GUARD RAIL
7. MSE RETAINING WALL

NOTE: BITUMINOUS MATERIALS (PRIME COAT) SHALL BE APPLIED BETWEEN EACH LIFT OF HOT-MIX ASPHALT PER DISTRICT ONE SPECIAL PROVISION "BITUMINOUS PRIME COAT FOR HOT-MIX ASPHALT PAVEMENT (FULL DEPTH)."

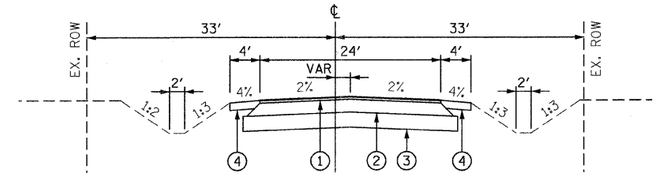

PROPOSED TYPICAL SECTION
STAS. 5+25.00 TO 6+61.31
STAS. 14+91.42.00 TO 15+05.00

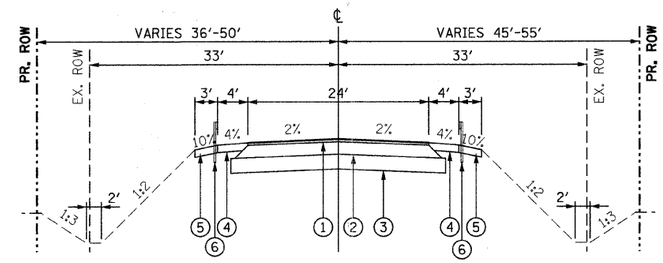

PROPOSED TYPICAL SECTION
STAS. 6+61.31 TO 7+75.00
STAS. 13+25.00 TO 15+01.42
(BRIDGE APPROACH PAVEMENT CONNECTOR, BRIDGE APPROACH PAVEMENT AND BRIDGE OMMISSION FROM STAS. 8+29.48 TO 11+70.52)

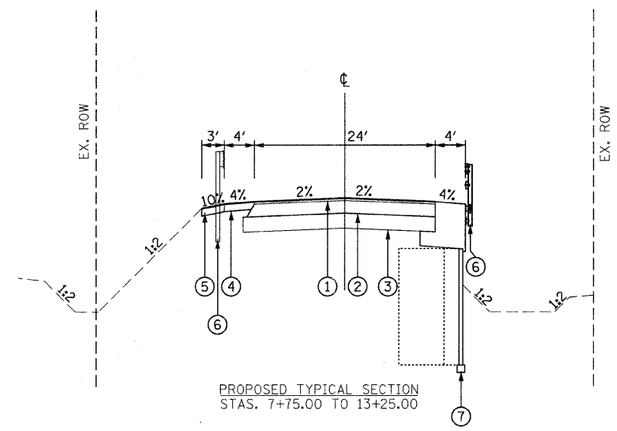

PROPOSED TYPICAL SECTION
STAS. 7+75.00 TO 13+25.00

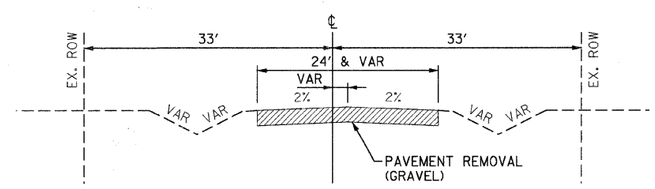

EXISTING TYPICAL SECTION
STAS. 5+25.00 TO 6+51.31
STAS. 15+01.42 TO 15+05.00
(EXISTING BRIDGE OMMISSION STAS. 9+82.21 TO 10+17.54)

FILE NAME = $FILEL$	USER NAME = $USER$	DESIGNED - PFR	REVISED -
		DRAWN - PFR	REVISED -
	PLOT SCALE = $SCALE$	CHECKED - KPS	REVISED -
TENG & ASSOCIATES, INC. ENGINEERS/ARCHITECTS/PLANNERS CHICAGO, ILLINOIS	PLOT DATE = 10-26-2010	DATE - 10/27/10	REVISED -

STATE OF ILLINOIS
DEPARTMENT OF TRANSPORTATION
GREEN GARDEN TOWNSHIP
88TH AVENUE (PEOTONE ROAD)

TYPICAL SECTIONS

SCALE: N.T.S.

F.A. RTE.	SECTION	COUNTY	TOTAL SHEETS	SHEET NO.
N/A	03-07118-00-BR	WILL	43	5
		CONTRACT NO. 63156		
FED. ROAD DIST. NO.	ILLINOIS	FED. AID PROJECT		

.\B020IA20I.DGN..\XSEC WORKING.DGN..\PP01A20I.SHT
10-26-2010,15:20:59 RDSSPF \\FS-0044\AM\VAULT_D-TRANS_07\2202\20745-001\CIVIL\CAD\01 DESIGN\A TENG\SHEET\TS01A202.SHT