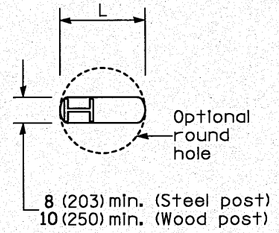

PLAN

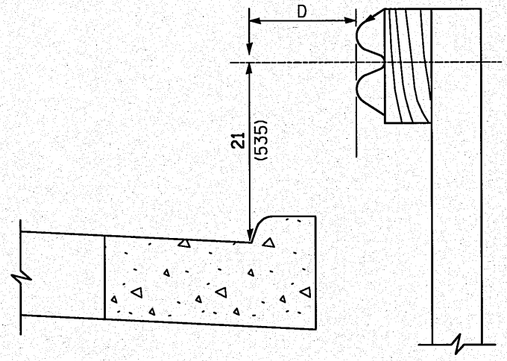

Note:
If it is necessary for D to be more than 12 (300) and less than 10'-0" (3.0 m) type M-2 (M-5) curb and gutter (Std. 606001) shall be used in front of and in advance of the guardrail.

GUARDRAIL PLACED BEHIND CURB

(D = 0 desirable to 12 (300) maximum)

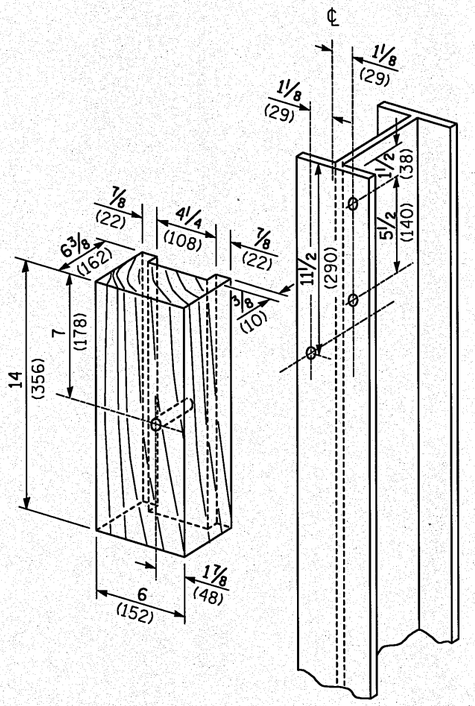

WOOD BLOCK-OUT AND STEEL POST DETAILS

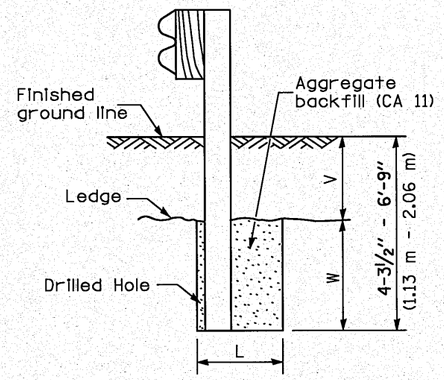

Note:
Ledge line is top of rock ledge or hard slag fill.

ELEVATION

FOOTING FOR POST WHEN IMPERVIOUS MATERIAL IS ENCOUNTERED

V	W	L	
		Steel Post	Wood Post
0 - 18 (0 - 460)	24 (610)	21 (530)	23 (580)
>18 - 41.5 (>460 - 825)	12 (305)	8 (203)	10 (250)
>41.5 - 53.5 (>825 - 1.13 m)	12 - 0 (305 - 0)	8 (203)	10 (250)

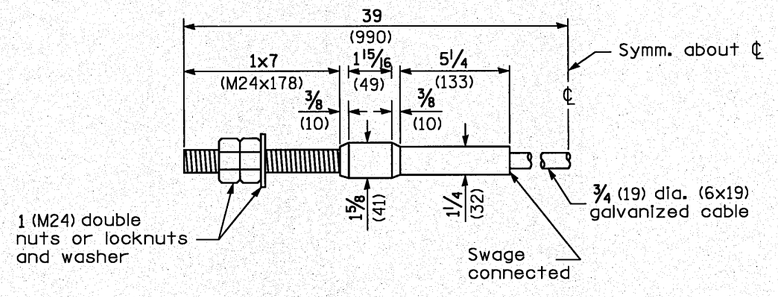

CABLE ASSEMBLY

(18,100 kg (40,000 lbs.) min. breaking strength)
Tighten to taut tension.

All dimensions are in inches (millimeters) unless otherwise noted.

FILE NAME = $FILEL$	USER NAME = $USER$	DESIGNED ST	REVISED -	STATE OF ILLINOIS DEPARTMENT OF TRANSPORTATION	DISTRICT 4 STANDARDS US-24 OVER LAMARSH CREEK	F.A.P. RTE. 317	SECTION 45BR-2	COUNTY PEORIA	TOTAL SHEETS 122 / SHEET NO. 95
		DRAWN ST	REVISED -				630011 PAGE 4 OF 4	CONTRACT NO. 68719	
	PLOT SCALE = $SCALE$	CHECKED FML	REVISED -						
	PLOT DATE = $DATE$	DATE 10-15-2010	REVISED -		SCALE: N.T.S. / SHEET NO. 8 OF 19 SHEETS / STA. / TO STA.	FED. ROAD DIST. NO.	ILLINOIS	FED. AID PROJECT	