1-21-11 LETTING ITEM 067

F.A.P. RTE.	SECTION	COUNTY	TOTAL SHEETS	SHEET NO.
317	45BR-2	PEORIA	122	1
	ILLINOIS	CONTRACT NO. 68719		

STATE OF ILLINOIS
DEPARTMENT OF TRANSPORTATION
DIVISION OF HIGHWAYS

PROPOSED HIGHWAY PLANS

FAP ROUTE 317 (U.S. 24 /IL 9)
SECTION 45BR-2
OVER LAMARSH CREEK
BRIDGE REPLACEMENT
PEORIA COUNTY
C-94-068-07

PROJECT ACBRF-0317(087)

FOR INDEX OF SHEETS, SEE SHEET NO. 2
FOR LIST OF HIGHWAY STANDARDS, SEE SHEET NO. 2

TRAFFIC DATA/DESIGN DESIGNATION

EXISTING ADT = 14,300 (2010)
SPEED LIMIT = 55 MPH

ROUTE CLASSIFICATION: CLASS II

% S.U. = 3%
% M.U. = 6%

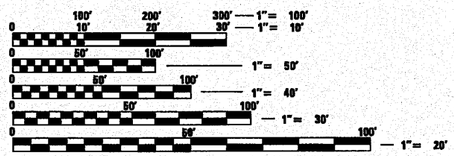

FULL SIZE PLANS HAVE BEEN PREPARED USING STANDARD ENGINEERING SCALES. REDUCED SIZED PLANS WILL NOT CONFORM TO STANDARD SCALES. IN MAKING MEASUREMENTS ON REDUCED PLANS, THE ABOVE SCALES MAY BE USED.

J.U.L.I.E.
JOINT UTILITY LOCATION INFORMATION FOR EXCAVATION
1-800-892-0123
OR 811

PROJECT ENGINEER: JOHN ZERFAS (GRAEF) 773-399-0112
PROJECT MANAGER: RON NOLTE (IDOT) 309-671-3470

CATALOG NO. 033511-00D
CONTRACT NO. 68719

RANGE 7 EAST

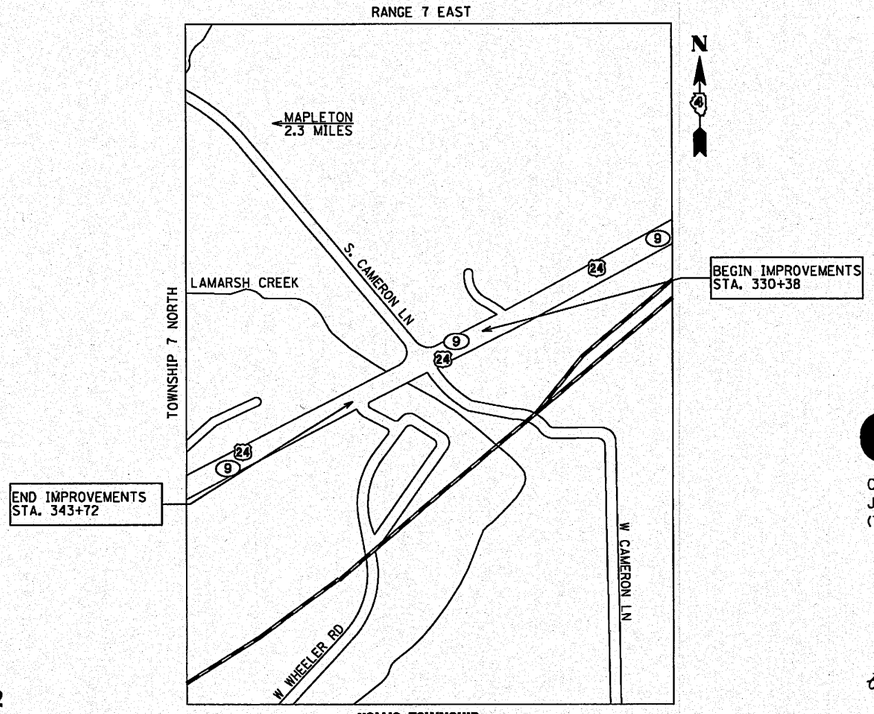

HOLLIS TOWNSHIP
GROSS AND NET LENGTH = 1,334 FT. = .25 MILES

D-94-049-07

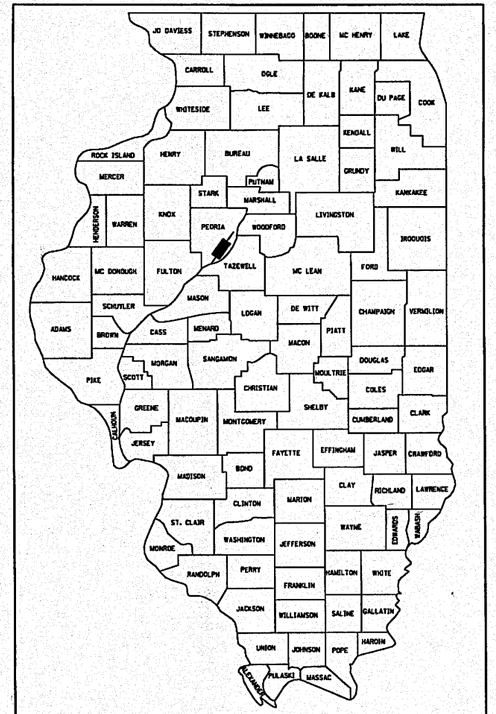

LOCATION OF SECTION INDICATED THUS:-

DESCRIPTION OF WORK

THIS IS A BRIDGE REPLACEMENT PROJECT AND INCLUDES PAVEMENT WIDENING AND RESURFACING; GUARDRAIL IMPROVEMENTS, DRAINAGE IMPROVEMENTS; PAVEMENT MARKINGS; LANDSCAPING; CONSTRUCTION STAGING AND ALL INCIDENTAL AND COLLATERAL WORK NECESSARY TO COMPLETE THE IMPROVEMENT.

STATE OF ILLINOIS
JOHN A. ZERFAS
081-004708
CHICAGO, IL
LICENSED STRUCTURAL ENGINEER
EXPIRES 11/30/2012

GRAEF

CONTACT:
JOHN ZERFAS, S.E.
(773) 339-0112

FRED M. LIN
062-056704
LICENSED PROFESSIONAL ENGINEER OF ILLINOIS
EXPIRES: 11/30/2011

LIN ENGINEERING, LTD.
Consulting Engineers
Chatham, Illinois Westmont, Illinois

STATE OF ILLINOIS
DEPARTMENT OF TRANSPORTATION
DIVISION OF HIGHWAYS

SUBMITTED 10/21 20 10
DEPUTY DIRECTOR OF HIGHWAYS, REGION ENGINEER

Dec 10 20 10
Scott E. Stitt, P.E. /a
Acting ENGINEER OF DESIGN AND ENVIRONMENT

Dec 10 20 10
Christine M. Reed /a
DIRECTOR OF HIGHWAYS, CHIEF ENGINEER

PRINTED BY THE AUTHORITY OF THE STATE OF ILLINOIS

INDEX OF SHEETS

SHEET NO.	DESCRIPTION
1	COVER SHEET
2	INDEX OF SHEETS AND HIGHWAY STANDARDS
3	GENERAL NOTES, COMMITMENTS AND JOB SPECFIC NOTES
4-5	STATUS OF UTILITIES
6-7	SUMMARY OF QUANTITIES
8-16	SCHEDULE OF QUANTITIES (ROADWAY)
17-18	TYPICAL SECTIONS
19	HORIZONTAL ALIGNMENT, TIES, AND BENCHMARKS
20-27	PROPOSED PLAN & PROFILE
28-36	MAINTENANCE OF TRAFFIC PLAN
37	EROSION CONTROL PLAN
38-41	DRAINAGE PLAN
42-43	R.O.W. PLAT
44-45	INTERSECTION DETAILS
46	PAVEMENT MARKING PLAN
47	REMOVAL PLAN
48	SAW CUT JOINT DETAIL
49-87	STRUCTURAL PLANS

DISTRICT CADD STANDARDS

88	SIDE SLOPE DETAILS (205001)
89	TYPICAL APPLICATION OF SILT FILTER FENCE (280001)
90	HOT MIX ASPHALT SURFACE REMOVAL (COLD MILLING) (440001)
91	PIPE CULVERT EXTENSION COLLAR (WITHOUT END SECTION) (542016)
92-95	REMOVE & REERECT STEEL PLATE BEAM GUARDRAIL (630011)
96-97	GUARDRAIL EROSION CONTROL TREATMENT (630101)
98	TRAFFIC BARRIER TERMINAL, TYPE 2
99	DELINATORS - SPECIAL (635001)
100-102	GUARDRAIL AND BARRIER WALL DELINEATION (635101)
103	PERMANENT SURVEY TIE & PERMANENT SURVEY MARKERS TYPE I & TYPE II (667101)
104	PERMANENT SURVEY MARKERS TYPE II (SPECIAL) (667106)
105-106	TYPICAL PAVEMENT MARKINGS (780001)
107-122	CROSS SECTIONS

HIGHWAY STANDARDS

STD. NO.	TITLE
000001-06	STANDARD SYMBOLS, ABBREVIATIONS AND PATTERNS
001006	DECIMAL OF AN INCH AND OF A FOOT
280001-05	TEMPORARY EROSION CONTROL SYSTEMS
420401-08	BRIDGE APPROACH PAVEMENT CONNECTOR
442201-03	CLASS C AND D PATCHES
482011-03	HMA SHOULDER STRIPS/ SHOULDERS WITH RESURFACING OR WIDENING AND RESURFACING PROJECTS
515001-03	NAME PLATE FOR BRIDGES
542101-02	REINFORCED CONCRETE END SECTIONS FOR PIPE CULVERTS 15" (375 mm) THRU 36" (900 mm) DIA. AT RIGHT ANGLES WITH ROADWAY
542301-03	PRECAST REINFORCED CONCRETE FLARED END SECTION
542311-02	GRATING FOR CONCRETE FLARED END SECTION (FOR 600 mm (24") THRU 1300 mm (54") PIPE)
542401-01	METAL END SECTION FOR PIPE CULVERTS
542601-03	REINFORCED CONCRETE PIPE ELBOW
602001-02	CATCH BASIN TYPE A
602301-03	INLET, TYPE A
604001-03	FRAME AND LIDS, TYPE 1
604056-03	FRAME AND GRATE, TYPE 11V
606001-04	CONCRETE CURB TYPE B AND COMBINATION CONCRETE CURB AND GUTTER
606301-04	PC CONCRETE ISLANDS AND MEDIANS
630001-09	STEEL PLATE BEAM GUARDRAIL
630301-05	SHOULDER WIDENING FOR TYPE 1 (SPECIAL) GUARDRAIL TERMINALS

HIGHWAY STANDARDS

STD. NO.	TITLE
601101-01	CONCRETE HEADWALL FOR PIPE DRAIN
631011-07	TRAFFIC BARRIER TERMINAL, TYPE 2
631031-09	TRAFFIC BARRIER TERMINAL, TYPE 6
635006-03	REFLECTOR AND TERMINAL MARKER PLACEMENT
635011-02	REFLECTOR MARKER AND MOUNTING DETAILS
642001-01	SHOULDER RUMBLE STRIPS
667101-01	PERMANENT SURVEY MARKERS
701001-02	OFF-ROAD OPERATIONS, 2L, 2W, MORE THAN 4.5 m (15') AWAY
701101-02	OFF-ROAD OPERATIONS, MULTILANE, 4.5 m (15') TO 600 mm (24") FROM PAVEMENT EDGE
701106-02	OFF-ROAD OPERATIONS, MULTILANE, MORE THAN 4.5 m (15') AWAY
701426-04	LANE CLOSURE, 2L, 2W, PAVEMENT WIDENING, FOR SPEEDS ≥45 MPH
701431-06	LANE CLOSURE, MULTILANE, UNDIV. WITH CROSSOVER, FOR SPEEDS > 45 MPH TO 55 MPH
701901-01	TRAFFIC CONTROL DEVICES
704001-06	TEMPORARY CONCRETE BARRIER
720001-01	SIGN PANEL MOUNTING DETAILS
720006-02	SIGN PANEL ERECTION DETAILS
720011-01	METAL POSTS FOR SIGNS, MARKERS & DELINEATORS
728001-01	TELESCOPING STEEL SIGN SUPPORT
729001-01	APPLICATIONS OF TYPES A & B METAL POSTS (FOR SIGNS & MARKERS)
731001-01	BASE FOR TELESCOPING STEEL SIGN SUPPORT
780001-02	TYPICAL PAVEMENT MARKINGS
781001-03	TYPICAL APPLICATIONS RAISED REFLECTIVE PAVEMENT MARKERS

AVAILABLITY OF ELECTRONIC FILES

MICROSTATION AND GEOPAK FILES OF THIS PROJECT WILL BE MADE AVAILABLE TO THE CONTRACTOR. IF THERE IS A CONFLICT BETWEEN THE ELECTRONIC FILES AND THE PRINTED CONTRACT PLANS AND DOCUMENTS, THE PRINTED CONTRACT PLANS AND DOCUMENTS SHALL TAKE PRECEDENCE OVER THE ELECTRONIC FILES. THE CONTRACTOR SHALL ACCEPT ALL RISK ASSOCIATED WITH USING THE ELECTRONIC FILES AND SHALL HOLD THE DEPARTMENT HARMLESS FOR ANY ERRORS OR OMISSIONS IN THE ELECTRONIC FILES AND THE DATA CONTAINED THEREIN. ERRORS OR DELAYS RESULTING FROM THE USE OF THE ELECTRONIC FILES BY THE CONTRACTOR SHALL NOT RESULT IN AN EXTENSION OF TIME FOR ANY INTERIM OR FINAL COMPLETION DATE OR SHALL NOT BE CONSIDERED CAUSE FOR ADDITIONAL COMPENSATION. THE CONTRACTOR SHALL NOT USE, SHARE, OR DISTRIBUTE THESE ELECTRONIC FILES EXCEPT FOR THE PURPOSE OF CONSTRUCTING THIS CONTRACT. ANY CLAIMS BY THIRD PARTIES DUE TO USE OR ERRORS SHALL BE THE SOLE RESPONSIBILITY OF THE CONTRACTOR. THE CONTRACTOR SHALL INCLUDE THIS DISCLAIMER WITH THE TRANSFER OF THESE ELECTRONIC FILES TO ANY OTHER PARTIES AND SHALL INCLUDE APPROPRIATE LANGUAGE BINDING THEM TO SIMILAR RESPONSIBILITIES.

UTILITIES- LOCATIONS/ INFORMATION ON PLANS

THE LOCATIONS OF EXISTING WATER MAINS, GAS MAINS, SEWERS, ELECTRIC POWER LINES, TELEPHONE LINES AND OTHER UTILITIES AS SHOWN ON THE PLANS ARE BASED ON CAREFUL FIELD INVESTIGATION AND THE BEST INFORMATION AVAILABLE, BUT THEY ARE NOT GUARANTEED. UNLESS ELEVATIONS ARE SHOWN --- ALL UTILITY LOCATIONS SHOWN ON THE CROSS SECTIONS ARE BASED ON THE APPROXIMATE DEPTH SUPPLIED BY THE UTILITY COMPANY. IT SHALL BE THE CONTRACTOR'S RESPONSIBILITY TO ASCERTAIN THEIR EXACT LOCATION FROM THE UTILITY COMPANIES AND BY FIELD INSPECTION.

ALL ELEVATIONS SHOWN ON THE PLANS ARE ESTABLISHED FROM U.S.G.S. MEAN SEA LEVEL DATUM.

ENGINEER'S FIELD OFFICE

ALL ENGINEERS FIELD OFFICES SHALL CONTAIN ONE FULLY EQUIPPED FIRST-AID CABINET. THIS ITEM WILL NOT BE PAID FOR SEPARATELY, BUT SHALL BE CONSIDERED AS INCLUDED IN THE PAY ITEM FOR ENGINEERS FIELD OFFICE.

CLEARING

AT LOCATIONS WHERE CLEARING IS INDICATED ON THE PLANS BEYOND THE LIMITS OF THE PROPOSED EXCAVATION OR EMBANKMENT, THE CONTRACTOR SHALL RESTORE THE DISTURBED EARTH BY BLADING AND SHAPING TO BLEND WITH THE ADJACENT GROUND. THE CLEARING WILL NOT BE PAID FOR SEPARATELY BUT SHALL BE INCLUDED IN THE COST OF THE EXCAVATION PAY ITEMS IN THE PLANS. PAYMENT FOR RESEEDING OR RESODDING WILL BE AS PROVIDED IN THE PLANS.

TREE REMOVAL

THE DISTRICT FOUR TREE COMMITTEE SHOULD BE CONTACTED AND PRIOR APPROVAL OBTAINED FOR ANY TREE REMOVAL BEYOND THE LIMITS/LOCATIONS INCLUDED IN THE PLANS.

SEEDING- SIDESLOPE RIPPING

ALL SLOPES STEEPER THAN 3 TO 1 AND OVER 15 FT. (4.5 M) IN HEIGHT SHALL BE RIPPED. THIS SHALL CONSIST OF RIPPING BETWEEN 18 INCHES TO 24 INCHES (450 MM TO 600 MM) DEEP NORMAL TO THE SLOPE. THE INTERVAL OF RIPPING ALONG THE SLOPE SHALL BE 12 FT. (3.6 M). THIS WORK SHALL BE DONE AFTER THE SEED BED HAS BEEN PREPARED BUT BEFORE ANY FERTILIZER OR SEED HAS BEEN APPLIED. THE FERTILIZER AND SEED SHALL BE APPLIED WITHIN A 24-HOUR PERIOD AFTER THE RIPPING HAS BEEN DONE. THIS WORK WILL NOT BE PAID FOR SEPARATELY BUT WILL BE INCLUDED IN THE COST OF THE VARIOUS ITEMS OF SEEDING INVOLVED.

BUTT JOINT CUTTING TIME RESTRICTION

BUTT JOINTS SHALL NOT BE MILLED MORE THAN THREE (3) DAYS PRIOR TO PLACEMENT OF THE HMA SURFACE COURSE.

PAVING SURFACE COURSE

CONTINUOUS PAVING OPERATIONS ON THE MAIN ROADWAY SHALL BE MAINTAINED AT ALL TIMES DURING THE CONSTRUCTION OF THE HOT-MIX ASPHALT SURFACE. NO INTERRUPTIONS FOR SIDE ROADS, ENTRANCES, TURN LANES, ETC. WILL BE ALLOWED.

REFLECTIVE CRACK CONTROL PLACEMENT

REFLECTIVE CRACK CONTROL SHALL BE PLACED ON THE COLD MILLED SURFACE.

ENVIRONMENTAL REVIEWS

PRIOR TO THE USE OF ANY PROPOSED BORROW AREAS, USE AREAS (TEMPORARY ACCESS ROADS, DETOURS, RUN-AROUNDS, ETC.) AND/OR WASTE AREAS, THE CONTRACTOR SHALL FILE THE REQUIRED ENVIRONMENTAL RESOURCE REQUEST SURVEYS ACCORDING TO SECTION 107.22 OF THE STANDARD SPECIFICATIONS. THESE SURVEYS ARE REQUIRED IN ORDER FOR THE DEPARTMENT TO CONDUCT CULTURAL AND BIOLOGICAL RESOURCE SURVEYS FOR THE PROPOSED SITE.

PRIOR TO ANY WASTE MATERIALS BEING REMOVED FROM THE CONSTRUCTION SITE THE REQUIRED ENVIRONMENTAL RESOURCE SURVEYS WILL NEED TO BE OBTAINED AND FILED BY THE CONTRACTOR. EXCESS WASTE PRODUCTS REMOVED FROM THE CONSTRUCTION SITE SHALL BE DISPOSED OF AS REQUIRED IN SECTION 202.03 OF THE STANDARD SPECIFICATIONS.

ANY PROTRUDING METAL BARS SHALL BE REMOVED PRIOR TO THE DISPOSAL OF BROKEN CONCRETE AT APPROVED DISPOSAL SITES.

THE REQUIRED ENVIRONMENTAL RESOURCE DOCUMENTATION SHALL INCLUDE THE FOLLOWING:

- BDE FORM 2289 (ENVIRONMENTAL SURVEY REQUEST)
- A LOCATION MAP SHOWING THE SIZE LIMITS AND LOCATION OF THE USE AREA
- SIGNED PROPERTY OWNER AGREEMENT FORM – D4 PI0100
- COLOR PHOTOGRAPHS DEPICTING THE USE AREA
- BORROW AREA ENTRY AGREEMENT FORM – D4 PI0101

PLEASE NOTE THAT A MINIMUM OF TWO WEEKS SHALL BE ALLOWED FOR THE DISTRICT TO OBTAIN THE REQUIRED ENVIRONMENTAL CLEARANCES.

PAVEMENT STATION NUMBERS & PLACEMENT

THE CONTRACTOR SHALL PROVIDE LABOR AND MATERIALS REQUIRED TO IMPRINT PAVEMENT STATION NUMBERS IN THE FINISHED SURFACE OF THE PAVEMENT AND/OR OVERLAY. THE NUMBERS SHALL BE APPROXIMATELY ¾ INCH (20 MM) WIDE, 5 INCHES (125 MM) HIGH AND 5/8 INCH (15 MM) DEEP.

THE PAVEMENT STATION NUMBERS SHALL BE INSTALLED AS SPECIFIED HEREIN:

INTERVAL - 200 FEET (ENGLISH STATIONING) OR 100 METERS (METRIC STATIONING)

BOTTOM OF NUMBERS - 6 INCHES (150 MM) FROM THE INSIDE EDGE OF THE PAVEMENT MARKING

LOCATION:

- 2, 3, & 5 LANE PAVEMENTS - RIGHT EDGE OF PAVEMENT IN DIRECTION OF INCREASING STATIONS
- MULTI-LANE DIVIDED ROADWAYS - OUTSIDE EDGE OF PAVEMENT IN BOTH DIRECTIONS
- RAMPS - ALONG BASELINE EDGE OF PAVEMENT

POSITION - STATIONS SHALL BE PLACED SO THEY CAN BE READ FROM THE ADJACENT SHOULDER

FORMAT - ENGLISH (METRIC) PAVEMENT STATIONS SHALL USE THIS FORMAT "XXX (XX+X00)", WHERE X REPRESENTS THE PAVEMENT STATION

THIS WORK WILL NOT BE PAID FOR SEPARATELY, BUT WILL BE INCLUDED IN THE COST OF THE ASSOCIATED PAVEMENT AND/OR OVERLAY PAY ITEMS.

ORDERING LENGTH CONFIRMATION - DRAINAGE ITEMS

THE CONTRACTOR SHALL CONSULT WITH THE ENGINEER IN REGARD TO THE EXACT LENGTH OF THE BOX/PIPE CULVERTS, STORM SEWERS, AND/OR PIPE DRAINS REQUIRED PRIOR TO ORDERING THESE ITEMS.

COMMITMENTS

NONE

MEDIAN AND ISLAND NOSES

WHEN CONSTRUCTING MEDIAN AND ISLAND NOSES THE FOLLOWING CRITERIA SHOULD BE FOLLOWED:

- BARRIER CURB SHALL BE USED TO CONSTRUCT NOSES WHEN THE MEDIAN OR ISLAND SURROUNDS A MAST ARM OR OTHER NON-BREAKAWAY FOUNDATION.
- RAMPED NOSES SHALL BE USED ON MEDIANS OR ISLANDS WITH BREAKAWAY POSTS.

SIGN POST HOLES

VERTICAL HOLES SHALL BE CONSTRUCTED IN THE ISLAND PAVEMENT AND/OR CONCRETE MEDIAN OF THE TYPE SPECIFIED OR CONCRETE MEDIAN SURFACE 4 INCHES (100 MM). THE HOLES SHALL BY 24 INCHES (600 MM) IN DIAMETER OR 24 INCHES (600 MM) SQUARE AND THEY SHALL BE FREE OF ANY OBSTRUCTION, EXCEPT EARTH, FOR A DEPTH OF 5 FEET (1.5 M) AT THE LOCATIONS SHOWN ON THE PLANS OR AS DIRECTED BY THE ENGINEER. ANY HOLES NOT USED FOR THE PLACEMENT OF SIGNS SHALL BE FILLED AND COMPACTED FLUSH WITH THE TOP OF THE ISLAND PAVEMENT, CONCRETE MEDIAN OF THE TYPES SPECIFIED, OR CONCRETE MEDIAN SURFACE 4 INCHES (100 MM). THE TOP 3 INCHES (75 MM) OF SAID COMPACTED FILL SHALL CONSIST OF A HOT-MIX ASPHALT MIXTURE. ALL HOLES IN WHICH THE SIGN POSTS ARE INSTALLED AT THE TIME OF THIS CONTRACT SHALL BE SIMILARLY FILLED.

THIS WORK, INCLUDING ANY REQUIRED PAVEMENT REMOVAL NECESSARY TO CONSTRUCT THE SIGN POST HOLES, WILL NOT BE PAID FOR SEPARATELY BUT SHALL BE INCLUDED IN THE CONTRACT UNIT PRICE PER SQUARE FOOT (SQUARE METER) FOR ISLAND PAVEMENT AND/OR CONCRETE MEDIAN OF THE TYPE SPECIFIED, OR CONCRETE MEDIAN SURFACE, 4 INCHES (100 MM).

TRANSITION PAYMENT METHOD - NEW/OLD CONSTRUCTION

TEN FEET (10 FT.) (3 M) TRANSITIONS SHALL BE USED TO MATCH PROPOSED ITEMS OF WORK TO EXISTING ITEMS IN THE FIELD UNLESS OTHERWISE SHOWN. THE TRANSITION SHALL BE PAID FOR AT THE CONTRACT UNIT PRICE FOR THE PROPOSED ITEM OF WORK SPECIFIED.

ENGINEERS FIELD OFFICE

ADD THE FOLLOWING SENTENCE TO THE END OF PARAGRAPH 670.02 (I) AND 670.04 (E):

ALL OF THE TELEPHONE LINES PROVIDED SHALL HAVE UNPUBLISHED NUMBERS.

SIGNING

SIGN LOCATIONS MAY VARY FROM THE STATIONS SHOWN ON THE PLANS IN ACCORDANCE WITH DIRECTIONS FROM THE ENGINEER AT THE TIME OF CONSTRUCTION. SIGN LOCATIONS MAY BE ADJUSTED IN THE FIELD TO AVOID ANY FOUND UTILITIES.

ALL WOOD POST LOCATIONS SHALL BE VERIFIED WITH THE BUREAU OF OPERATIONS, TRAFFIC SECTION, BEFORE INSTALLATION.

Polymerized Prime Coat Rates

Surface Type	Estimated Truck Application Rate	Residual Rate
Milled (HMA or PCC)	0.08 gal/sy (0.00034 ton/sy)	0.04 gal/sy
Existing Pavement	0.05 gal/sy (0.00022 ton/sy)	0.025 gal/sy
Fog Coat (between lifts)	0.05 gal/sy (0.00022 ton/sy)	0.025 gal/sy

Note: Estimated truck application rate is used for estimating quantities

HOT-MIX ASPHALT MIXTURE REQUIREMENTS

Mixture Use(s):	Mainline US 24 - 1 3/4" & HMA Pavement Full-Depth Surface Lifts - 2" Polymer Surface Course	Mainline US 24 - Var. Depth & HMA Pavement Full-Depth Upper Lift - 2 1/4" Polymer Binder Course	HMA Pavement Full-Depth Lower Lifts - 9 1/4" Binder Course	Cameron & Wheeler Rd (Lower Binder Lifts)	Cameron & Wheeler Rd (Surface Lifts)	Bituminous Shoulder (Surface Lift)	Bituminous Shoulder (Bottom Lift)	US24 & Cameron Temp. Pavement 10" (Lower Binder Lifts 8 1/2")	US24 & Cameron Temp. Pavement 10" (Surface Lift 1 1/2")
RAP % (Max)**:	10%	10%	25%	25%	15%	15%	25%	25%	15%
AC/PG:	SBS OR SBR 70-22	SBS OR SBR 70-22	PG 64-22	PG 64-22	PG 64-22	PG 64-22	PG 64-22	PG 64-22	PG 64-22
Design Air Voids:	4.0% @ N=70	4.0% @ N=70	4.0% @ N=70	4.0% @ N=50	4.0% @ N=50	3.0% @ N=50	4.0% @ N=50	4.0% @ N=70	4.0% @ N=70
Mixture Composition: (Gradation Mixture)	IL 9.5 OR IL 12.5	IL 19.0	IL 19.0	IL 19.0	IL 9.5 OR IL 12.5	IL 9.5 OR IL 12.5	IL 19.0	IL 19.0	IL 9.5 or 12.5
Friction Aggregate	MIX E	N.A.	N.A.	N.A.	MIX D	MIX C	N.A.	N.A.	Mix D
Pay Item	40603565	40603235		40603080	40603335	48203029		Z0062456	
	40701951								

**If the RAP option is selected, the asphalt cement grade may need to be adjusted; this will be determined by the Engineer.

Notes: "E-mix" used for enhanced friction on mainline.

Individual lift thickness of each mix type will be no less than 3 x nominal maximum aggregate size and no more than 6 x nominal maximum aggregate size

FILE NAME = $FILEL$	USER NAME = $USER$	DESIGNED -	REVISED -
		DRAWN -	REVISED -
	PLOT SCALE = 100.0000 ' / IN.	CHECKED -	REVISED -
	PLOT DATE = 10/18/2010	DATE - 10-15-2010	REVISED -

STATE OF ILLINOIS
DEPARTMENT OF TRANSPORTATION

U.S. 24 /IL 9- OVER LAMARSH CREEK
GENERAL NOTES, COMMITMENTS AND JOB SPECIFIC NOTES

SCALE: NTS | SHEET NO. 1 OF 1 SHEETS | STA. TO STA.

F.A.P. RTE.	SECTION	COUNTY	TOTAL SHEETS	SHEET NO.
317	45BR-2	PEORIA	122	3
		CONTRACT NO. 68719		
		ILLINOIS FED. AID PROJECT		

Illinois Department of Transportation

Status of Utilities

Name of Utility Company

AT&T ILLINOIS

Route	FAP 317 (US 24)
Section	45BR-2
County	Peoria
Contract No.	68719
Catalog No.	033511-00D

Route	Offset	Location	Type of Utility	Type of Conflict	Disposition
US 24	103' Lt.	Sta. 335+59	Buried Cable	Guardrail	Caution
US 24	62' Lt.	Sta. 335+70	Buried Cable	Guardrail	Caution
US 24	112' Rt to 66' Rt	Sta. 336+20 to Sta. 336+70	Buried Cable	Guardrail	Caution
US 24	72' Lt. to 72' Rt.	Sta. 336+60 to Sta. 337+10	Buried Cable	New Bridge	Relocate
US 24	76' Lt.	Sta. 336+40	Pole	New Slope	Relocate
Wheeler Rd.	12' Rt.	Sta. 19+23	Buried Cable	Guardrail	Caution
Wheeler Rd.	18' Rt.	Sta. 18+33 to Sta. 19+00	Buried Cable	Guardrail	Caution
Wheeler Rd.	18' Lt.	Sta. 19+26	Buried Cable	Guardrail	Caution

NOTE: Please check all your facilities within the construction limits of this project.

Illinois Department of Transportation

Status of Utilities

Name of Utility Company

AmerenCILCO

Route	FAP 317 (US 24)
Section	45BR-2
County	Peoria
Contract No.	68719
Catalog No.	033511-00D

Route	Offset	Location	Type of Utility	Type of Conflict	Disposition
US 24	76' Lt.	Sta. 336+40	Electric Pole	New Slope	Caution

NOTE: Please check all your facilities within the construction limits of this project.

PLAN: SURVEYED / PLOTTED / GRADES CHECKED / BLUE STAKED / RT. OF WAY CHECKED / CADD FILE NAME — NOTE BOOK NO. — BY — DATE

PROFILE: SURVEYED / PLOTTED / GRADES CHECKED / BLUE STAKED / STRUCTURE NOTATNS CHKD — NOTE BOOK NO. — BY — DATE

FILE NAME = ©FILEL©	USER NAME = ©USER©	DESIGNED ST	REVISED -	STATE OF ILLINOIS DEPARTMENT OF TRANSPORTATION	STATUS OF UTILITIES US-24 OVER LAMARSH CREEK	F.A.P. RTE. 317	SECTION 45BR-2	COUNTY PEORIA / TOTAL SHEETS 122 / SHEET NO. 4
		DRAWN ST	REVISED -					CONTRACT NO. 68719
	PLOT SCALE = ©SCALE©	CHECKED FML	REVISED -		SCALE: N.T.S. / SHEET NO. 1 OF 2 SHEETS / STA. / TO STA.	FED. ROAD DIST. NO.	ILLINOIS	FED. AID PROJECT
	PLOT DATE = ©DATE©	DATE 10-15-2010	REVISED -					

Illinois Department of Transportation

Status of Utilities

Name of Utility Company

AmerenCILCO

Route	FAP 317 (US 24)
Section	45BR-2
County	Peoria
Contract No.	68719
Catalog No.	033511-00D

Route	Offset	Location	Type of Utility	Type of Conflict	Disposition
US 24	87' Lt.	Sta. 335+61	Buried Gas	Guardrail	Caution
US 24	80' Lt.	Sta. 340+00	Buried Gas	Ditch Grading	Caution

NOTE: Please check all your facilities within the construction limits of this project.

PLAN — SURVEYED / PLOTTED / ROADWAY CHECKED / RT. OF WAY CHECKED / CADD FILE NAME — NOTE BOOK NO. — BY — DATE

PROFILE — SURVEYED / PLOTTED / ROADWAY CHECKED / BLM NOTED / STRUCTURE NOTATIONS CHKD — NOTE BOOK NO. — BY — DATE

FILE NAME = ©FILEL©	USER NAME = ©USER©	DESIGNED ST	REVISED -
		DRAWN ST	REVISED -
	PLOT SCALE = ©SCALE©	CHECKED FML	REVISED -
	PLOT DATE = ©DATE©	DATE 10-15-2010	REVISED -

STATE OF ILLINOIS
DEPARTMENT OF TRANSPORTATION

STATUS OF UTILITIES
US-24 OVER LAMARSH CREEK

SCALE: N.T.S. | SHEET NO. 2 OF 2 SHEETS | STA. | TO STA.

F.A.P. RTE.	SECTION	COUNTY	TOTAL SHEETS	SHEET NO.
317	45BR-2	PEORIA	122	5
		CONTRACT NO. 68719		

FED. ROAD DIST. NO. | ILLINOIS | FED. AID PROJECT

SUMMARY OF QUANTITIES

80% FED.
20% STATE

	CODE NO.	ITEM	UNIT	TOTAL QUANTITY	0011 STRUCTURE QUANTITY	0004 ROADWAY QUANTITY	0004 100% STATE ROADWAY QUANTITY	
	20200100	EARTH EXCAVATION	CU YD	1,742		1,742		
	20201200	REMOVAL AND DISPOSAL OF UNSUITABLE MATERIAL	CU YD	50		50		
	20300100	CHANNEL EXCAVATION	CU YD	480		480		
	20400800	FURNISHED EXCAVATION	CU YD	1,061		1,061		
	20800150	TRENCH BACKFILL	CU YD	1,091		1,091		
	21101615	TOPSOIL FURNISH AND PLACE, 4"	SQ YD	7,107		7,107		
*	25000210	SEEDING, CLASS 2A	ACRE	1.47		1.47		
*	25000400	NITROGEN FERTILIZER NUTRIENT	POUND	132		132		
*	25000500	PHOSPHOROUS FERTILIZER NUTRIENT	POUND	132		132		
*	25000600	POTASSIUM FERTILIZER NUTRIENT	POUND	132		132		
*	25100630	EROSION CONTROL BLANKET	SQ YD	7,092		7,092		
	28000305	TEMPORARY DITCH CHECKS	FOOT	216		216		
	28000400	PERIMETER EROSION BARRIER	FOOT	1,317		1,317		
	28000500	INLET AND PIPE PROTECTION	EACH	3		3		
	28000510	INLET FILTERS	EACH	11		11		
	28100107	STONE RIPRAP, CLASS A4	SQ YD	4,177	3,334	843		
	28200200	FILTER FABRIC	SQ YD	4,177	3,334	843		
	31100910	SUBBASE GRANULAR MATERIAL, TYPE A 12"	SQ YD	2,096		2,096		
	31102000	SUBBASE GRANULAR MATERIAL, TYPE C	CU YD	932		932		
	35102200	AGGREGATE BASE COURSE, TYPE B 10"	SQ YD	463		463		
	40600115	POLYMERIZED BITUMINOUS MATERIALS (PRIME COAT)	GALLON	610		610		
	40600990	TEMPORARY RAMP	SQ YD	219		219		
	40603080	HOT-MIX ASPHALT BINDER COURSE, IL-19.0, N50	TON	72		72		
	40603235	POLYMERIZED HOT-MIX ASPHALT BINDER COURSE, IL-19.0, N70	TON	1,211		1,211		
	40603335	HOT-MIX ASPHALT SURFACE COURSE, MIX "D", N50	TON	64		64		
	40603565	POLYMERIZED HOT-MIX ASPHALT SURFACE COURSE, MIX "E", N70	TON	750		750		
	40701951	HOT-MIX ASPHALT PAVEMENT (FULL-DEPTH), 13 1/2"	SQ YD	1,953		1,953		
	40800050	INCIDENTAL HOT-MIX ASPHALT SURFACING	TON	25		25		
	42001430	BRIDGE APPROACH PAVEMENT CONNECTOR (FLEXIBLE)	SQ YD	119		119		
	42001300	PROTECTIVE COAT	SQ YD	203		203		
	44000100	PAVEMENT REMOVAL	SQ YD	1,421		1,421		
	44000300	CURB REMOVAL	FOOT	89		89		
	44004000	PAVED DITCH REMOVAL	FOOT	10		10		
	44004250	PAVED SHOULDER REMOVAL	SQ YD	3,903		3,903		
	44201023	CLASS B PATCHES, TYPE III, 14 INCH	SQ YD	23		23		
	44201025	CLASS B PATCHES, TYPE IV, 14 INCH	SQ YD	78		78		
	44201299	DOWEL BARS 1 1/2"	EACH	184		184		
	44213200	SAW CUTS	FOOT	280		280		
	44300200	STRIP REFLECTIVE CRACK CONTROL TREATMENT	FOOT	2,904		2,904		
	48100700	AGGREGATE SHOULDERS, TYPE A 8"	SQ YD	360		360		
	48203029	HOT-MIX ASPHALT SHOULDERS, 8"	SQ YD	3,185		3,185		
	50100100	REMOVAL OF EXISTING STRUCTURES	EACH	1	1			
	50105220	PIPE CULVERT REMOVAL	FOOT	85		85		
	50200100	STRUCTURE EXCAVATION	CU YD	730	730			
	50300225	CONCRETE STRUCTURES	CU YD	478.5	478.5			
	50300255	CONCRETE SUPERSTRUCTURE	CU YD	1,037.5	1,037.5			
	50300260	BRIDGE DECK GROOVING	SQ YD	2,701	2,701			
	50300280	CONCRETE ENCASEMENT	CU YD	12.2	12.2			
	50300300	PROTECTIVE COAT	SQ YD	3,240	3,240			
	50500105	FURNISHING AND ERECTING STRUCTURAL STEEL	L SUM	1	1			

* DENOTES SPECIALTY ITEM

SUMMARY OF QUANTITIES

80% FED.
20% STATE

	CODE NO.	ITEM	UNIT	TOTAL QUANTITY	0011 STRUCTURE QUANTITY	0004 ROADWAY QUANTITY	0004 100% STATE ROADWAY QUANTITY	
	50500505	STUD SHEAR CONNECTORS	EACH	10,878	10,878			
	50800105	REINFORCEMENT BARS	POUND	10,000	10,000			
	50800205	REINFORCEMENT BARS, EPOXY COATED	POUND	365,515	365,430	85		
	50800515	BAR SPLICERS	EACH	1,916	1,916			
	51201600	FURNISHING STEEL PILES HP12X53	FOOT	1,411	1,411			
	51202300	DRIVING PILES	FOOT	1,411	1,411			
	51203600	TEST PILE STEEL HP12X53	EACH	2	2			
	51204650	PILE SHOES	EACH	36	36			
	51500100	NAME PLATES	EACH	1	1			
*	51803000	DRILLED SHAFT IN SOIL	CU YD	120	120			
*	51804000	DRILLED SHAFT IN ROCK	CU YD	26	26			
	52100520	ANCHOR BOLTS, 1"	EACH	112	112			
	542A1069	PIPE CULVERTS, CLASS A, TYPE 2 24"	FOOT	100		100		
	542A1075	PIPE CULVERTS, CLASS A, TYPE 2 30"	FOOT	9		9		
	542A1081	PIPE CULVERTS, CLASS A, TYPE 2 36"	FOOT	18		18		
	54213453	END SECTIONS18"	EACH	3		3		
	54213669	PRECAST REINFORCED CONCRETE FLARED END SECTIONS 24"	EACH	2		2		
	54213675	PRECAST REINFORCED CONCRETE FLARED END SECTIONS 30"	EACH	1		1		
	54213681	PRECAST REINFORCED CONCRETE FLARED END SECTIONS 36"	EACH	1		1		
	54215436	CAST-IN-PLACE REINFORCED CONCRETE END SECTIONS 36"	EACH	1		1		
	54247130	GRATING FOR CONCRETE FLARED END SECTIONS 24"	EACH	2		2		
	54247150	GRATING FOR CONCRETE FLARED END SECTIONS 30"	EACH	1		1		
	54247170	GRATING FOR CONCRETE FLARED END SECTIONS 36"	EACH	1		1		
	54248510	CONCRETE COLLAR	CU YD	1.6		1.6		
	550A0380	STORM SEWERS, CLASS A, TYPE 2 18"	FOOT	254		254		
	55100500	STORM SEWER REMOVAL 12"	FOOT	210		210		
	59100100	GEOCOMPOSITE WALL DRAIN	SQ YD	182	182			
	60201105	CATCH BASIN, TYPE A, 4'-DIAMETER, TYPE 11 FRAME AND GRATE	EACH	3		3		
	60236800	INLETS, TYPE A, TYPE 11 FRAME AND GRATE	EACH	2		2		
	60300305	FRAMES AND LIDS TO BE ADJUSTED	EACH	2		2		
	60619200	CONCRETE MEDIAN, TYPE SB-6.06	SQ FT	977		977		
	60619600	CONCRETE MEDIAN, TYPE SB-6.12	SQ FT	853		853		
*	63000001	STEEL PLATE BEAM GUARD RAIL, TYPE A, 6 FOOT POSTS	FOOT	426		426		
*	63000015	STEEL PLATE BEAM GUARD RAIL, TYPE D	FOOT	2,459		2,459		
*	63100045	TRAFFIC BARRIER TERMINAL, TYPE 2	EACH	2		2		
*	63100085	TRAFFIC BARRIER TERMINAL, TYPE 6	EACH	4		4		
*	63100167	TRAFFIC BARRIER TERMINAL, TYPE 1 (SPECIAL) TANGENT	EACH	6		6		
	63200310	GUARDRAIL REMOVAL	FOOT	3,249		3,249		
*	63300725	STEEL PLATE BEAM GUARD RAIL (SHORT RADIUS)	FOOT	444		444		
	63500105	DELINEATORS	EACH	14		14		
	64200105	SHOULDER RUMBLE STRIPS	FOOT	4,816		4,816		
	66600105	FURNISHING AND ERECTING RIGHT-OF-WAY MARKERS	EACH	4		4		
	66700205	PERMANENT SURVEY MARKERS, TYPE I	EACH	1		1		
	66700305	PERMANENT SURVEY MARKERS, TYPE II	EACH	4		4		
	67000400	ENGINEER'S FIELD OFFICE, TYPE A	CAL MO	12		12		
	67100100	MOBILIZATION	L SUM	1		1		
	X7010216	TRAFFIC CONTROL AND PROTECTION, (SPECIAL)	L SUM	1		1		
	70103815	TRAFFIC CONTROL SURVEILLANCE	CAL DA	40		40		
	70106600	CHANGEABLE MESSAGE SIGN	CAL MO	24		24		
	70300100	SHORT TERM PAVEMENT MARKING	FOOT	32,848		32,848		

* DENOTES SPECIALTY ITEM

FILE NAME =	USER NAME = USER	DESIGNED -	REVISED -
		DRAWN -	REVISED -
	PLOT SCALE = 100.0000 ' / IN.	CHECKED -	REVISED -
	PLOT DATE = 10/21/2010	DATE - 10-15-2010	REVISED -

STATE OF ILLINOIS
DEPARTMENT OF TRANSPORTATION

U.S. 24 /IL 9- OVER LAMARSH CREEK
SUMMARY OF QUANTITIES

SCALE: NTS | SHEET NO. 1 OF 2 SHEETS | STA. | TO STA.

F.A.P. RTE.	SECTION	COUNTY	TOTAL SHEETS	SHEET NO.
317	45BR-2	PEORIA	122	6

CONTRACT NO. 68719

ILLINOIS FED. AID PROJECT

SUMMARY OF QUANTITIES

80% FED.
20% STATE

	CODE NO.	ITEM	UNIT	TOTAL QUANTITY	0011 STRUCTURE QUANTITY	0004 ROADWAY QUANTITY	0004 100% STATE ROADWAY QUANTITY	
	70300210	TEMPORARY PAVEMENT MARKING- LETTERS AND SYMBOLS	SQ FT	172		172		
	70300220	TEMPORARY PAVEMENT MARKING- LINE 4"	FOOT	23,442		23,442		
	70300250	TEMPORARY PAVEMENT MARKING- LINE 8"	FOOT	857		857		
	70300280	TEMPORARY PAVEMENT MARKING- LINE 24"	FOOT	86		86		
*	70300510	PAVEMENT MARKING TAPE, TYPE III - LETTERS AND SYMBOLS	SQ FT	125		125		
*	70300520	PAVEMENT MARKING TAPE, TYPE III 4"	FOOT	29,529		29,529		
*	70300540	PAVEMENT MARKING TAPE, TYPE III 6"	FOOT	472		472		
*	70300570	PAVEMENT MARKING TAPE, TYPE III 24"	FOOT	26		26		
	70301000	WORK ZONE PAVEMENT MARKING REMOVAL	SQ FT	24,489		24,489		
	70400100	TEMPORARY CONCRETE BARRIER	FOOT	337.5		337.5		
	70400200	RELOCATE TEMPORARY CONCRETE BARRIER	FOOT	337.5		337.5		
*	72000100	SIGN PANEL - TYPE 1	SQ FT	2.3		2.3		
	72400100	REMOVE SIGN PANEL ASSEMBLY - TYPE A	EACH	1		1		
*	72800100	TELESCOPING STEEL SIGN SUPPORT	FOOT	18		18		
*	73100100	BASE FOR TELESCOPING STEEL SIGN SUPPORT	EACH	1		1		
*	78005100	EPOXY PAVEMENT MARKING - LETTERS AND SYMBOLS	SQ FT	172		172		
*	78005110	EPOXY PAVEMENT MARKING - LINE 4"	FOOT	23,442		23,442		
*	78005140	EPOXY PAVEMENT MARKING - LINE 8"	FOOT	857		857		
*	78005180	EPOXY PAVEMENT MARKING - LINE 24"	FOOT	86		86		
*	78100100	RAISED REFLECTIVE PAVEMENT MARKER	EACH	131		131		
*	78100105	RAISED REFLECTIVE PAVEMENT MARKER (BRIDGE)	EACH	14		14		
*	78200410	GUARDRAIL MARKERS, TYPE A	EACH	72		72		
*	78200520	BARRIER WALL MARKERS, TYPE B	EACH	108		108		
*	78201000	TERMINAL MARKER - DIRECT APPLIED	EACH	6		6		
	78300100	PAVEMENT MARKING REMOVAL	SQ FT	8,651		8,651		
	78300200	RAISED REFLECTIVE PAVEMENT MARKER REMOVAL	EACH	132		132		
	X0325201	SHOULDER RUMBLE STRIP REMOVAL	SQ YD	861		861		

* DENOTES SPECIALTY ITEM

SUMMARY OF QUANTITIES

80% FED.
20% STATE

	CODE NO.	ITEM	UNIT	TOTAL QUANTITY	0011 STRUCTURE QUANTITY	0004 ROADWAY QUANTITY	0004 100% STATE ROADWAY QUANTITY	
	X0976500	END SECTIONS TO BE REMOVED	EACH	8		8		
	X2070304	POROUS GRANULAR EMBANKMENT, SPECIAL	CU YD	353	353			
	X2503100	MOWING	UNIT	40			40	
	X4400110	TEMPORARY PAVEMENT REMOVAL	SQ YD	2,003		2,003		
	X4401196	HOT-MIX ASPHALT SURFACE REMOVAL, VARIABLE DEPTH	SQ YD	6,665		6,665		
	X4403300	CONCRETE MEDIAN REMOVAL	SQ FT	4,733		4,733		
	X5020501	UNDERWATER STRUCTURE EXCAVATION PROTECTION - LOCATION 1	EACH	1	1			
	X5020502	UNDERWATER STRUCTURE EXCAVATION PROTECTION - LOCATION 2	EACH	1	1			
	X5080600	MECHANICAL SPLICERS	EACH	288	288			
	Z0001002	GUARDRAIL AGGREGATE EROSION CONTROL	TON	388		388		
	Z0001900	ASBESTOS BEARING PAD REMOVAL	EACH	38	38			
	Z0004552	APPROACH SLAB REMOVAL	SQ YD	1,223		1,223		
	Z0013798	CONSTRUCTION LAYOUT	L SUM	1		1		
	Z0018002	DRAINAGE SCUPPERS, DS-11	EACH	4	4			
	Z0018700	DRAINAGE STRUCTURE TO BE REMOVED	EACH	4		4		
	Z0028407	TEMPORARY SHEET PILING	SQ FT	657	657			
	Z0029999	IMPACT ATTENUATOR REMOVAL	EACH	8		8		
*	Z0030030	IMPACT ATTENUATORS (FULLY RE-DIRECTIVE, NARROW), TEST LEVEL 3	EACH	8		8		
	Z0030260	IMPACT ATTENUATORS, TEMPORARY (FULLY REDIRECTIVE, NARROW), TEST LEVEL 3	EACH	2		2		
	Z0030330	IMPACT ATTENUATORS, RELOCATE (FULLY REDIRECTIVE), TEST LEVEL 3	EACH	2		2		
	Z0034105	MATERIAL TRANSFER DEVICE	TON	1,961		1,961		
	Z0046304	PIPE UNDERDRAINS FOR STRUCTURES 4"	FOOT	302	302			
	Z0062456	TEMPORARY PAVEMENT	SQ YD	2,003		2,003		

* DENOTES SPECIALTY ITEM

EARTHWORK SCHEDULE

LOCATION	EARTH EXCAVATION			
	EARTH EXCAVATION (CU YD)	EMBANKMENT (CU YD)	EARTH EXCAVATION ADJ. FOR SHRINKAGE (CU YD)	FURNISHED EXCAVATION WASTE (+) SHORTAGE (-) (CU YD)
US24 OVER LAMARSH CREEK	1742	2368	1307	-1061

REMOVAL AND DISPOSAL OF UNSUITABLE MATERIAL

JOB SITE	50	CU YD

CHANNEL EXCAVATION

JOB SITE	480	CU YD

NITROGEN FERTILIZER NUTRIENT

SEEDING, CLASS 2A	1.47	ACRE
Application Rate = 90 # / Acres		
Quantity	132	POUND

PHOSPHOROUS FERTILIZER NUTRIENT

SEEDING, CLASS 2A	1.47	ACRE
Application Rate = 90 # / Acres		
Quantity	132	POUND

POTASSIUM FERTILIZER NUTRIENT

SEEDING, CLASS 2A	1.47	ACRE
Application Rate = 90 # / Acres		
Quantity	132	POUND

INCIDENTAL HOT-MIX ASPHALT SURFACING

LOCATION	TON
STAGE 1 Cameron Lane	10
STAGE 2 Cameron Lane	10
STAGE 2 Wheeler Road	5
TOTAL	25

TRENCH BACKFILL

STORM SEWERS	969	CU YD
CULVERT	122	CU YD
TOTAL	1091	CU YD

TOPSOIL FURNISH AND PLACE, 4"

STATION	LENGTH	DISTANCE	AVERAGE LENGTH	AREA
	FT	FT	FT	SQ YD
US24				
330+50.00	0.82			
		50.00	1.28	7.12
331+00.00	1.74			
		50.00	6.02	33.42
331+50.00	10.29			
		50.00	20.24	112.46
332+00.00	30.20			
		50.00	45.86	254.79
332+50.00	61.53			
		50.00	58.72	326.22
333+00.00	55.91			
		50.00	56.23	312.41
333+50.00	56.56			
		50.00	60.67	337.06
334+00.00	64.79			
		50.00	60.78	337.67
334+50.00	56.77			
		50.00	57.02	316.80
335+00.00	57.27			
		50.00	28.64	159.09
335+50.00	0.00			
		50.00	20.86	115.89
336+00.00	41.72			
		50.00	49.28	273.75
336+50.00	56.83			
		50.00	51.57	286.49
337+00.00	46.31			
		8.53	46.31	43.88
337+08.53	46.31			
		162.72	46.23	835.94
338+71.25	46.16			
		28.75	46.67	149.09
339+00.00	47.18			
		50.00	68.03	377.94
339+50.00	88.87			
		50.00	63.34	351.91
340+00.00	37.81			
		50.00	26.32	146.23

TOPSOIL FURNISH AND PLACE, 4" (CONT'D)

STATION	LENGTH	DISTANCE	AVERAGE LENGTH	AREA
	FT	FT	FT	SQ YD
US24				
340+50.00	14.83			
		50.00	16.02	89.00
341+00.00	17.21			
		50.00	31.11	172.82
341+50.00	45.01			
		50.00	41.93	232.96
342+00.00	38.86			
		50.00	40.80	226.67
342+50.00	42.74			
		50.00	32.73	181.86
343+00.00	22.73			
		50.00	18.98	105.42
343+50.00	15.22			
		22.00	7.61	18.61
343+72.00	0.00			
Cameron Lane				
8+50.00	30.88			
		50.00	19.37	107.64
9+00.00	7.87			
		50.00	10.95	60.83
9+50.00	14.03			
		9.84	7.02	7.67
9+59.84	0.00			
		74.73	0.00	0.00
10+34.57	0.00			
		15.43	18.41	31.56
10+50.00	36.82			
		50.00	29.03	161.25
11+00.00	21.23			
		50.00	46.77	259.84
11+50.00	72.31			
		50.00	59.96	333.10
12+00.00	47.60			
		61.17	23.80	161.77
12+61.17	0.00			
Wheeler Road				
18+00.00	6.12			
		50.00	14.57	80.94
18+50.00	23.02			
		50.00	14.20	78.91
19+00.00	5.39			
		61.00	2.69	18.25
19+61.00	0.00			
			TOTAL	7107

PLAN — NOTE BOOK NO. ___ — SURVEYED / PLOTTED / ALIGNMENT CHECKED / BLK. BOTTOM / BY: OF BLK CHECKED / PLAN TITLE NAME — BY — DATE

PROFILE — NOTE BOOK NO. ___ — SURVEYED / PLOTTED / GRADE CHECKED / BLK. BOTTOM / STRUCTURE NOTATIONS CHKD — BY — DATE

FILE NAME = @FILEL@	USER NAME = @USER@	DESIGNED ST	REVISED -	STATE OF ILLINOIS DEPARTMENT OF TRANSPORTATION	SCHEDULE OF QUANTITIES US-24 OVER LAMARSH CREEK	F.A.P. RTE. 317	SECTION 45BR-2	COUNTY PEORIA	TOTAL SHEETS 122	SHEET NO. 8
		DRAWN ST	REVISED -					CONTRACT NO. 68719		
	PLOT SCALE = @SCALE@	CHECKED FML	REVISED -							
	PLOT DATE = @DATE@	DATE 10-15-2010	REVISED -		SCALE: N.T.S. / SHEET NO. 1 OF 9 SHEETS / STA. / TO STA.	FED. ROAD DIST. NO.	ILLINOIS	FED. AID PROJECT		

SEEDING, CLASS 2A

STATION	OFFSET	ALIGNMENT	STATION	OFFSET	ALIGNMENT	AREA (SQ FT)	AREA (ACRE)
330+50.94	RT	US24	12+34.74	RT	Cameron	16407.90	0.38
332+00.00	LT	US24	8+25.00	RT	Cameron	5563.75	0.13
8+25.00	LT	Cameron	337+25.95	LT	US24	5718.04	0.13
12+61.17	LT	Cameron	11+14.19	LT	Cameron	3683.17	0.08
336+75.96	RT	US24	338+43.96	RT	US24	6567.53	0.15
337+48.38	LT	US24	17+72.64	RT	Wheeler	11689.99	0.27
338+50.40	RT	US24	343+50.00	RT	US24	7596.56	0.17
17+71.98	LT	Wheeler	343+71.47	LT	US24	6601.41	0.15
						TOTAL	1.47

EROSION CONTROL BLANKET

STATION	OFFSET	ALIGNMENT	STATION	OFFSET	ALIGNMENT	AREA (SQ FT)	AREA (SQ YD)
330+50.94	RT	US24	12+34.74	RT	Cameron	16407.90	1823
332+00.00	LT	US24	8+25.00	RT	Cameron	5563.75	618
8+25.00	LT	Cameron	337+25.95	LT	US24	5718.04	635
12+61.17	LT	Cameron	11+14.19	LT	Cameron	3683.17	409
336+75.96	RT	US24	338+43.96	RT	US24	6567.53	730
337+48.38	LT	US24	17+72.64	RT	Wheeler	11689.99	1299
338+50.40	RT	US24	343+50.00	RT	US24	7596.56	844
17+71.98	LT	Wheeler	343+71.47	LT	US24	6601.41	733
						TOTAL	7092

STONE RIPRAP, CLASS A4

STATION	OFFSET	ALIGNMENT	STATION	OFFSET	ALIGNMENT	AREA (SQ FT)	AREA (SQ YD)
8+25.00	RT	Cameron	8+56.35	RT	Cameron	612.81	68
11+00.00	RT	Cameron	11+21.38	RT	Cameron	329.52	37
335+94.94	LT	US24	337+06.65	LT	US24	2861.91	318
336+21.98	RT	US24	336+76.29	RT	US24	2272.53	253
339+50.00	LT	US24	340+00.00	LT	US24	841.34	93
339+65.00	RT	US24	339+81.34	RT	US24	293.83	33
340+92.57	LT	US24	341+12.60	LT	US24	375.39	42
						TOTAL	843

FILTER FABRIC

STATION	OFFSET	ALIGNMENT	STATION	OFFSET	ALIGNMENT	AREA (SQ FT)	AREA (SQ YD)
8+25.00	RT	Cameron	8+56.35	RT	Cameron	612.81	68
11+00.00	RT	Cameron	11+21.38	RT	Cameron	329.52	37
335+94.94	LT	US24	337+06.65	LT	US24	2861.91	318
336+21.98	RT	US24	336+76.29	RT	US24	2272.53	253
339+50.00	LT	US24	340+00.00	LT	US24	841.34	93
339+65.00	RT	US24	339+81.34	RT	US24	293.83	33
340+92.57	LT	US24	341+12.60	LT	US24	375.39	42
						TOTAL	843

CLASS B PATCHES, TYPE III, 14 INCH

STATION	OFFSET	ALIGNMENT	STATION	OFFSET	ALIGNMENT	AREA (SQ FT)	AREA (SQ YD)
336+32	RT	US24	336+51	RT	US24	211.31	23
						TOTAL	23

SUBBASE GRANULAR MATERIAL, TYPE A 12"

STATION	OFFSET	ALIGNMENT	STATION	OFFSET	ALIGNMENT	AREA (SQ FT)	AREA (SQ YD)
330+38	RT	US24	335+37	RT	US24	5544	616
339+50	RT	US24	343+50	RT	US24	663	74
332+00	LT	US24	336+30	LT	US24	1292	144
339+15	LT	US24	340+19	LT	US24	414	46
340+78	LT	US24	343+71	LT	US24	902	100
341+11	LT	US24	343+71	LT	US24	412	46
10+45	CL	Cameron	11+99	CL	Cameron	9507	1056
19+10	LT	Wheeler	19+61	LT	Wheeler	126	14
						TOTAL	2096

SUBBASE GRANULAR MATERIAL, TYPE C

STATION	OFFSET	ALIGNMENT	STATION	OFFSET	ALIGNMENT	AREA (SQ FT)	VOLUME (CU YD)
330+38	RT	US24	334+79	RT	US24	2263	122
339+50	RT	US24	343+50	RT	US24	4231	229
332+00	LT	US24	336+30	LT	US24	3147	170
339+07	LT	US24	340+19	LT	US24	1315	71
340+78	LT	US24	343+71	LT	US24	2992	162
10+45	RT	Cameron	12+00	RT	Cameron	3168	171
19+10	LT	Wheeler	19+61	LT	Wheeler	143	8
						TOTAL	932

POLYMERIZED BITUMINOUS MATERIALS (PRIME COAT)

STATION	OFFSET	ALIGNMENT	STATION	OFFSET	ALIGNMENT	AREA (SQ FT)	GALLON
330+38	RT	US24	336+59	RT	US24	21958	195.19
339+50	RT	US24	343+50	RT	US24	11565	102.80
332+00	LT	US24	336+30	LT	US24	12036	106.99
339+21	LT	US24	343+71	LT	US24	14725	130.89
10+45	CL	Cameron	11+99	CL	Cameron	8211	45.62
8+25	CL	Cameron	9+60	CL	Cameron	3415	18.97
19+10	CL	Wheeler	19+61	CL	Wheeler	1752	9.73
						TOTAL	610.18

HOT-MIX ASPHALT BINDER COURSE, IL-19.0, N50

STATION	OFFSET	ALIGNMENT	STATION	OFFSET	ALIGNMENT	AREA (SQ FT)	TON
8+25	CL	Cameron	9+60	CL	Cameron	3415	47.81
19+10	CL	Wheeler	19+61	CL	Wheeler	1752	24.53
						TOTAL	72.34

PLAN — SURVEYED / PLOTTED / ALIGNMENT CHECKED / R.O.W. CHECKED / NOTE BOOK NO. ___ / CADD FILE NAME ___ — BY — DATE

PROFILE — SURVEYED / PLOTTED / GRADES CHECKED / R.O.W. CHECKED / NOTE BOOK NO. ___ / STRUCTURE NOTATIONS CHKD — BY — DATE

POLYMERIZED HOT-MIX ASPHALT BINDER COURSE, IL-19.0, N70

STATION	OFFSET	ALIGNMENT	STATION	OFFSET	ALIGNMENT	AREA (SQ FT)	TON
330+38	RT	US24	336+59	RT	US24	21958	407.16
339+50	RT	US24	343+50	RT	US24	11565	207.96
332+00	LT	US24	336+30	LT	US24	12036	298.82
339+21	LT	US24	343+71	LT	US24	14725	296.85
						TOTAL	1210.78

HOT-MIX ASPHALT SURFACE COURSE, MIX "D", N50

STATION	OFFSET	ALIGNMENT	STATION	OFFSET	ALIGNMENT	AREA (SQ FT)	TON
8+25	CL	Cameron	9+60	CL	Cameron	3415	42.50
19+10	CL	Wheeler	19+61	CL	Wheeler	1752	21.80
						TOTAL	64.30

POLYMERIZED HOT-MIX ASPHALT SURFACE COURSE, MIX "E", N70

STATION	OFFSET	ALIGNMENT	STATION	OFFSET	ALIGNMENT	AREA (SQ FT)	TON
330+38	RT	US24	336+59	RT	US24	21958	273.26
339+50	RT	US24	343+50	RT	US24	11565	143.92
332+00	LT	US24	336+30	LT	US24	12036	149.78
339+21	LT	US24	343+71	LT	US24	14725	183.24
						TOTAL	750.20

HOT-MIX ASPHALT PAVEMENT (FULL-DEPTH), 13 1/2"

STATION	OFFSET	ALIGNMENT	STATION	OFFSET	ALIGNMENT	AREA (SQ FT)	AREA (SQ YD)
330+38	RT	US24	335+33	RT	US24	5544	616
339+50	RT	US24	343+50	RT	US24	649	72
332+00	LT	US24	336+30	LT	US24	1290	143
339+07	LT	US24	340+19	LT	US24	445	49
340+78	LT	US24	343+71	LT	US24	902	100
341+11	LT	US24	344+71	LT	US24	412	46
10+45	RT	Cameron	12+00	RT	Cameron	8211	912
19+10	LT	Wheeler	19+61	LT	Wheeler	126	14
						TOTAL	1953

BRIDGE APPROACH PAVEMENT CONNECTOR (FLEXIBLE)

STATION	OFFSET	ALIGNMENT	STATION	OFFSET	ALIGNMENT	AREA (SQ FT)	AREA (SQ YD)
336+44	CL	US24	336+52	CL	US24	498.35	55
339+27	CL	US24	339+35	CL	US24	575.97	64
						TOTAL	119

PROTECTIVE COAT

STATION	OFFSET	ALIGNMENT	STATION	OFFSET	ALIGNMENT	AREA (SQ FT)	AREA (SQ YD)
336+03	CL	US24	336+53	CL	US24	636	71
339+27	CL	US24	340+08	CL	US24	217	24
10+51	CL	Cameron	12+00	CL	Cameron	977	109
						TOTAL	203

PAVEMENT REMOVAL

STATION	OFFSET	ALIGNMENT	STATION	OFFSET	ALIGNMENT	AREA (SQ FT)	AREA (SQ YD)
8+25	CL	Cameron	9+54	CL	Cameron	3200.65	356
10+45	CL	Cameron	11+99	CL	Cameron	7207.00	801
19+09	CL	Wheeler	19+55	CL	Wheeler	1475.77	164
336+32	RT	US24	336+51	RT	US24	211.31	23
339+45	RT	US24	339+64	RT	US24	237.43	26
340+81	RT	US24	340+82	RT	US24	230.53	26
341+00	RT	US24	341+00	RT	US24	230.53	26
						TOTAL	1421

HOT-MIX ASPHALT SURFACE REMOVAL, VARIABLE DEPTH

STATION	OFFSET	ALIGNMENT	STATION	OFFSET	ALIGNMENT	AREA (SQ FT)	AREA (SQ YD)
330+38	CL	US24	336+90	CL	US24	33407.10	3712
338+90	CL	US24	343+71	CL	US24	26577.92	2953
						TOTAL	6665

APPROACH SLAB REMOVAL

STATION	OFFSET	ALIGNMENT	STATION	OFFSET	ALIGNMENT	AREA (SQ FT)	AREA (SQ YD)
336+90	CL	US24	337+49	CL	US24	5502	611.4
338+31	CL	US24	338+90	CL	US24	5502	611.3
						TOTAL	1223

PLAN — SURVEYED / PLOTTED / ALIGNMENT CHECKED / RT. OF WAY CHECKED / CADD FILE NAME / NOTE BOOK NO. ____ / BY / DATE

PROFILE — SURVEYED / PLOTTED / GRADES CHECKED / B.M. NOTED / STRUCTURE NOTATIONS CHKD / NOTE BOOK NO. ____ / BY / DATE

CLASS B PATCHES, TYPE IV, 14 INCH

STATION	OFFSET	ALIGNMENT	STATION	OFFSET	ALIGNMENT	AREA (SQ FT)	AREA (SQ YD)
339+45	RT	US24	339+64	RT	US24	237.43	26
340+81	RT	US24	340+82	RT	US24	230.53	26
341+00	RT	US24	341+00	RT	US24	230.53	26
						TOTAL	78

AGGREGATE SHOULDERS, TYPE A 8"

STATION	OFFSET	ALIGNMENT	STATION	OFFSET	ALIGNMENT	AREA (SQ FT)	AREA (SQ YD)
332+00	LT	US24	335+21	LT	US24	967	107
330+38	RT	US24	334+28	RT	US24	1275	142
341+86	LT	US24	343+71	LT	US24	579	64
342+06	RT	US24	343+50	RT	US24	421	47
						TOTAL	360

HOT-MIX ASPHALT SHOULDERS, 8"

STATION	OFFSET	ALIGNMENT	STATION	OFFSET	ALIGNMENT	AREA (SQ FT)	AREA (SQ YD)
330+38	CL	US24	335+34	CL	US24	6605	734
332+00	LT	US24	8+25	RT	Cameron	3463	385
330+38	RT	US24	12+10	RT	Cameron	3234	359
8+35	LT	Cameron	336+32	LT	US24	876	97
12+00	LT	Cameron	336+78	RT	US24	1913	213
339+01	LT	US24	18+33	RT	Wheeler	1592	177
339+48	RT	US24	343+50	RT	US24	4034	448
18+33	LT	Wheeler	343+71	LT	US24	3294	366
340+76	CL	US24	343+71	CL	US24	3656	406
						TOTAL	3185

RAISED REFLECTIVE PAVEMENT MARKER

STATION	OFFSET	ALIGNMENT	STATION	OFFSET	ALIGNMENT	LENGTH (FT)	RRPM (EACH)
309+00.00	RT	US24	336+57.00	RT	US24	2757.00	34
318+50.00	LT	US24	336+33.00	LT	US24	1783.00	22
330+38.00	RT	US24	334+80.00	RT	US24	442.00	6
339+25.00	LT	US24	370+00.00	LT	US24	3075.00	38
339+27.00	LT	US24	343+64.00	LT	US24	437.00	5
339+44.00	RT	US24	339+92.00	RT	US24	48.00	1
339+47.00	RT	US24	358+80.00	RT	US24	1933.00	24
						TOTAL	131

RAISED REFLECTIVE PAVEMENT MARKER (BRIDGE)

STATION	OFFSET	ALIGNMENT	STATION	OFFSET	ALIGNMENT	LENGTH (FT)	RRPM (EACH)
336+57.00	RT	US24	339+47.00	RT	US24	290.00	4
336+33.00	LT	US24	339+25.00	LT	US24	292.00	4
336+44.00	LT	US24	339+19.00	LT	US24	275.00	3
336+60.00	RT	US24	339+35.00	RT	US24	275.00	3
						TOTAL	14

RAISED REFLECTIVE PAVEMENT MARKER REMOVAL

STATION	OFFSET	ALIGNMENT	STATION	OFFSET	ALIGNMENT	LENGTH (FT)	RRPM (EACH)
309+00.00	RT	US24	358+80.00	RT	US24	4980.00	62
318+50.00	LT	US24	370+00.00	LT	US24	5150.00	64
336+11.00	LT	US24	340+26.00	LT	US24	415.00	5
						TOTAL	132

SHOULDER RUMBLE STRIP REMOVAL

STATION	OFFSET	ALIGNMENT	STATION	OFFSET	ALIGNMENT	LENGTH (FT)	AREA (SQ YD)
323+50.00	RT (INSIDE)	US24	331+50.00	RT (INSIDE)	US24	800.00	178
331+50.00	LT (INSIDE)	US24	335+15.00	LT (INSIDE)	US24	365.00	81
332+10.00	LT (OUTSIDE)	US24	344+30.00	LT (OUTSIDE)	US24	1220.00	271
341+50.00	LT (INSIDE)	US24	349+00.00	LT (INSIDE)	US24	750.00	167
349+00.00	RT (INSIDE)	US24	356+40.00	RT (INSIDE)	US24	740.00	164
						TOTAL	861

TEMPORARY PAVEMENT

STATION	OFFSET	ALIGNMENT	STATION	OFFSET	ALIGNMENT	AREA (SQ FT)	AREA (SQ YD)
324+00.00	CL	US24	335+17.00	CL	US24	5625.94	625
10+47.00	RT	Cameron	11+00.00	RT	Cameron	493.25	55
11+46.95	RT	Cameron	15+23.77	RT	Cameron	2194.27	244
11+97.58	LT	Cameron	14+22.02	LT	Cameron	1160.08	129
348+36.86	CL	US24	351+90.00	CL	US24	7655.96	851
352+50.00	CL	US24	354+00.00	CL	US24	900.00	100
						TOTAL	2003

TEMPORARY PAVEMENT REMOVAL

STATION	OFFSET	ALIGNMENT	STATION	OFFSET	ALIGNMENT	AREA (SQ FT)	AREA (SQ YD)
324+00.00	CL	US24	335+17.00	CL	US24	5625.94	625
10+47.00	RT	Cameron	11+00.00	RT	Cameron	493.25	55
11+46.95	RT	Cameron	15+23.77	RT	Cameron	2194.27	244
11+97.58	LT	Cameron	14+22.02	LT	Cameron	1160.08	129
348+36.86	CL	US24	351+90.00	CL	US24	7655.96	851
352+50.00	CL	US24	354+00.00	CL	US24	900.00	100
						TOTAL	2003

GUARDRAIL AGGREGATE EROSION CONTROL

STATION	OFFSET	ALIGNMENT	STATION	OFFSET	ALIGNMENT	AREA (SQ FT)	TON
334+28	RT	US24	12+29	RT	Cameron	804	30
330+38	CL	US24	335+34	CL	US24	4262	158
8+35	LT	Cameron	336+41	LT	US24	528	20
12+56	LT	Cameron	336+96	RT	US24	778	29
338+85	LT	US24	8+33	RT	Cameron	777	29
339+39	RT	US24	342+06	RT	US24	802	30
340+96	CL	US24	343+71	CL	US24	1782	66
18+33	LT	Wheeler	341+86	LT	US24	750	28
						TOTAL	388

PLAN — SURVEYED / PLOTTED / ALIGNMENT CHECKED / R.O.W. CHECKED / CADD FILE NAME — NOTE BOOK NO. — BY — DATE

PROFILE — SURVEYED / PLOTTED / GRADES CHECKED / STRUCTURE NOTATIONS CHKD — NOTE BOOK NO. — BY — DATE

TEMPORARY DITCH CHECKS

STATION	OFFSET	ALIGNMENT	LENGTH (FOOT)
11+50.00	LT	Cameron	48
338+00.00	RT	US24	37
338+00.00	LT	US24	37
339+00.00	LT	US24	37
341+50.00	LT	US24	26
342+50.00	LT	US24	31
		TOTAL	216

INLET AND PIPE PROTECTION

STATION	OFFSET	ALIGNMENT	EACH
8+53.92	RT	Cameron	1
11+11.01	RT	Cameron	1
340+99.25	LT	US24	1
		TOTAL	3

INLET FILTERS

STATION	OFFSET	ALIGNMENT	EACH
338+08.42	RT	US24	1
336+12.93	RT	US24	1
336+32.00	RT	US24	1
336+32.00	LT	US24	1
339+00.13	LT	US24	1
339+04.84	RT	US24	1
339+45.00	RT	US24	1
339+45.00	LT	US24	1
340+80.79	RT	US24	1
341+00.00	RT	US24	1
342+67.11	RT	US24	1
		TOTAL	11

END SECTION 18"

STATION	OFFSET	ALIGNMENT	EACH
336+65	RT	US24	1
339+45	RT	US24	1
341+00	RT	US24	1
		TOTAL	3

CATCH BASIN, TYPE A, 4'-DIAMETER, TYPE 11 FRAME AND GRATE

STATION	OFFSET	ALIGNMENT	EACH
336+32	RT	US24	1
339+45	RT	US24	1
341+00	RT	US24	1
		TOTAL	3

PRECAST REINFORCED CONCRETE FLARED END SECTIONS 24"

STATION	OFFSET	ALIGNMENT	EACH
340+00	LT	US24	1
341+00	LT	US24	1
		TOTAL	2

PRECAST REINFORCED CONCRETE FLARED END SECTIONS 30"

STATION	OFFSET	ALIGNMENT	EACH
8+54	RT	Cameron	1
		TOTAL	1

PRECAST REINFORCED CONCRETE FLARED END SECTIONS 36"

STATION	OFFSET	ALIGNMENT	EACH
11+11	RT	Cameron	1
		TOTAL	1

CAST IN PLACE REINFORCED CONCRETE END SECTIONS 36"

STATION	OFFSET	ALIGNMENT	EACH
11+09	LT	Cameron	1
		TOTAL	1

GRATING FOR CONCRETE FLARED END SECTIONS 24"

STATION	OFFSET	ALIGNMENT	EACH
340+00	LT	US24	1
341+00	LT	US24	1
		TOTAL	2

GRATING FOR CONCRETE FLARED END SECTIONS 30"

STATION	OFFSET	ALIGNMENT	EACH
8+54	RT	Cameron	1
		TOTAL	1

GRATING FOR CONCRETE FLARED END SECTIONS 36"

STATION	OFFSET	ALIGNMENT	EACH
11+11	RT	Cameron	1
		TOTAL	1

FRAMES AND LIDS TO BE ADJUSTED

STATION	OFFSET	ALIGNMENT	EACH
333+08	RT	US24	1
342+67	RT	US24	1
		TOTAL	2

DELINEATORS

STATION	OFFSET	ALIGNMENT	EACH
9+21.14	LT	Cameron	1
12+25.00	LT	Cameron	1
18+82.85	LT	Wheeler	1
18+82.85	RT	Wheeler	1
341+34.71	LT	US24	1
12+10.25	RT	Cameron	1
8+54	RT	Cameron	1
11+11	RT	Cameron	1
11+09	LT	Cameron	1
336+65	RT	US24	1
339+73	RT	US24	1
341+00	RT	US24	1
19+03	RT	Wheeler	1
19+36	LT	Wheeler	1
		TOTAL	14

CHANGEABLE MESSAGE SIGN

JOB SITE	24	CAL MO

ENGINEER'S FIELD OFFICE, TYPE A

CONSTRUCTION TIME	12	CAL MO

MOBILIZATION

JOB SITE	1	LSUM

TRAFFIC CONTROL AND PROTECTION

JOB SITE	1	LSUM

INLETS, TYPE A, TYPE 11 FRAME AND GRATE

STATION	OFFSET	ALIGNMENT	EACH
336+32	RT	US24	1
339+45	RT	US24	1
		TOTAL	2

TRAFFIC CONTROL SURVEILLANCE

JOB SITE	40	CAL DA

WORK ZONE PAVEMENT MARKING REMOVAL

TYPE	AREA FT^2
SHORT-TERM PAVEMENT MARKING	10950
TEMPORARY PAVEMENT MARKING	3229
PAVEMENT MARKING TAPE, TYPE III	10310
TOTAL	24489

SIGN PANEL - TYPE 1

S Cameron Ln NW Quad - STOP Sign	2.3	SQ FT

REMOVING SIGN PANEL ASSEMBLY - TYPE A

S Cameron Ln NW Quad	1	EACH

TELESCOPING STEEL SIGN SUPPORT

S Cameron Ln NW Quad	18	FOOT

BASE FOR TELESCOPING STEEL SIGN SUPPORT

S Cameron Ln NW Quad	1	EACH

GUARDRAIL MARKERS, TYPE A

TYPE A GUARDRAIL	426	FOOT
TYPE D GUARDRAIL	2459	FOOT
SHORT RADIUS GUARDRAIL	444	FOOT
TOTAL GUARDRAIL	3329	FOOT
GUARDRAIL MARKERS	72	EACH

PERMANENT SURVEY MARKERS, TYPE I

PROPOSED BRIDGE	1	EACH

PERMANENT SURVEY MARKERS, TYPE II

JOB SITE	4	EACH

PLAN: SURVEYED / PLOTTED / ALIGNMENT CHECKED / RT. OF WAY CHECKED / CADD FILE NAME / NOTE BOOK NO. / BY / DATE

PROFILE: SURVEYED / PLOTTED / GRADES CHECKED / STRUCTURE NOTATIONS CHKD / NOTE BOOK NO. / BY / DATE

FILE NAME = ©FILE1©	USER NAME = ©USER©	DESIGNED ST	REVISED -
		DRAWN ST	REVISED -
	PLOT SCALE = ©SCALE©	CHECKED FML	REVISED -
	PLOT DATE = ©DATE©	DATE 10-15-2010	REVISED -

STATE OF ILLINOIS
DEPARTMENT OF TRANSPORTATION

SCHEDULE OF QUANTITIES
US-24 OVER LAMARSH CREEK

SCALE: N.T.S. | SHEET NO. 5 OF 9 SHEETS | STA. | TO STA.

F.A.P. RTE.	SECTION	COUNTY	TOTAL SHEETS	SHEET NO.
317	45BR-2	PEORIA	122	12
		CONTRACT NO. 68719		

FED. ROAD DIST. NO. | ILLINOIS | FED. AID PROJECT

MAINTENANCE OF TRAFFIC SCHEDULE

LOCATION	TEMP. CONCRETE BARRIER	RELOCATE TEMP. CONCRETE BARRIER	SHORT-TERM PAVEMENT MARKING	TEMPORARY PAVEMENT MARKING - LETTERS AND SYMBOLS	TEMP. PAVEMENT MARKING LINE 4"	TEMP. PAVEMENT MARKING LINE 8"	TEMP. PAVEMENT MARKING LINE 24"	PAVEMENT MARKING TAPE, TYPE III - LETTERS AND SYMBOLS	PAVEMENT MARKING TAPE, TYPE III 4"	PAVEMENT MARKING TAPE, TYPE III 6"	PAVEMENT MARKING TAPE, TYPE III 24"	IMPACT ATTN., TEMP (FULLY REDIRECTIVE, NARROW), TEST LEVEL 3	IMPACT ATTN., REL. (FULLY REDIRECTIVE), TEST LEVEL 3
	FOOT	FOOT	FOOT	SQ FT	FOOT	FOOT	FOOT	SQ FT	FOOT	FOOT	FOOT	EACH	EACH
STAGE 1	337.5		32848	172	23442	857	86	125	29529	472	26	2	
STAGE 2		337.5											2

BARRIER WALL MARKERS, TYPE B

TEMP. CONC. BARRIER	337.5	FOOT
NO. OF SECTION	27	EACH
BARRIER WALL MARKERS	108	EACH

TERMINAL MARKER - DIRECT APPLIED

STATION	OFFSET	ALIGNMENT	EACH
9+21.14	LT	Cameron	1
12+25.00	LT	Cameron	1
18+82.85	LT	Wheeler	1
18+82.85	RT	Wheeler	1
341+34.71	LT	US24	1
12+10.25	RT	Cameron	1
		TOTAL	6

PAVEMENT MARKING REMOVAL

PAY ITEM	LENGTH (FT)	WIDTH (FT)	AREA (SQ FT)
78005100	N/A	N/A	172
78005110	23442	0.33	7736
78005140	857	0.667	571
78005180	86	2	172
		TOTAL	8651

END SECTION TO BE REMOVED

STATION	OFFSET	ALIGNMENT	EACH
8+55	RT	Cameron	1
11+11	RT	Cameron	1
11+09	LT	Cameron	1
336+65	RT	US24	1
339+36	RT	US24	1
339+93	LT	US24	1
340+79	LT	US24	1
340+83	RT	US24	1
		TOTAL	8

CONSTRUCTION LAYOUT

JOB SITE	1	LSUM

DRAINAGE STRUCTURE TO BE REMOVED

STATION	OFFSET	ALIGNMENT	EACH
336+13	RT	US24	1
339+00	RT	US24	1
339+05	RT	US24	1
340+81	RT	US24	1
		TOTAL	4

IMPACT ATTENUATOR REMOVAL

JOB SITE	8	EACH

IMPACT ATTENUATORS (FULLY RE-DIRECTIVE, NARROW), TEST LEVEL 3

JOB SITE	8	EACH

SAW CUTS

STATION	OFFSET	ALIGNMENT	LENGTH (FOOT)
330+38	RT	US24	45
332+00	LT	US24	45
343+50	RT	US24	45
343+72	LT	US24	45
8+25	CL	Cameron	17
11+99	CL	Cameron	58
19+10	CL	Wheeler	25
		TOTAL	280

EPOXY PAVEMENT MARKING - LINE 8"

STATION	OFFSET	ALIGNMENT	STATION	OFFSET	ALIGNMENT	LENGTH (FOOT)
332+80	RT	US24	334+80	RT	US24	200
336+31	LT	US24	340+07	LT	US24	377
337+52	RT	US24	339+92	RT	US24	240
340+75	LT	US24	341+15	LT	US24	40
					TOTAL	857

EPOXY PAVEMENT MARKING - LINE 24"

STATION	OFFSET	ALIGNMENT	STATION	OFFSET	ALIGNMENT	LENGTH (FOOT)
335+36	LT	US24	335+53	LT	US24	18
335+79	RT	US24	335+98	RT	US24	32
336+16	RT	US24	336+23	RT	US24	17
340+34	LT	US24	340+53	LT	US24	19
					TOTAL	86

CONCRETE MEDIAN REMOVAL

STATION	OFFSET	ALIGNMENT	STATION	OFFSET	ALIGNMENT	AREA (SQ FT)
10+46	RT	Cameron	12+00	RT	Cameron	1299
336+02	RT	US24	336+15	RT	US24	91
336+17	RT	US24	336+94	RT	US24	532
338+92	RT	US24	340+30	RT	US24	1056
340+84	RT	US24	342+62	RT	US24	1755
					TOTAL	4733

PAVED DITCH REMOVAL

STATION	OFFSET	ALIGNMENT	LENGTH (FOOT)
336+28	RT	US24	10
		TOTAL	10

PLAN — NOTE BOOK NO.____ — SURVEYED ____ PLOTTED ____ DRAWN ____ INT. OF RWY CHECKED ____ CADD FILE NAME ____ — BY ____ DATE ____

PROFILE — NOTE BOOK NO.____ — SURVEYED ____ PLOTTED ____ DRAWN ____ CHECKED ____ STRUCTURE NO(S)/FN(S) ____ — BY ____ DATE ____

PERIMETER EROSION BARRIER

STATION	OFFSET	ALIGNMENT	STATION	OFFSET	ALIGNMENT	LENGTH (FOOT)
332+00.00	LT	US24	335+00.00	LT	US24	304
8+25.00	LT	Cameron	336+91.17	LT	US24	236
12+00.00	LT	Cameron	11+15.29	LT	Cameron	100
337+48.38	LT	US24	339+50.00	LT	US24	217
17+72.64	RT	Wheeler	19+00.00	RT	Wheeler	125
17+71.98	LT	Wheeler	342+49.95	LT	US24	335
					TOTAL	1317

CURB REMOVAL

STATION	OFFSET	ALIGNMENT	STATION	OFFSET	ALIGNMENT	LENGTH (FOOT)
10+95	LT	Cameron	337+01	RT	US24	89
					TOTAL	89

PIPE CULVERT REMOVAL

STATION	OFFSET	ALIGNMENT	STATION	OFFSET	ALIGNMENT	LENGTH (FOOT)
339+93	LT	US24	340+79	LT	US24	85
					TOTAL	85

PIPE CULVERTS, CLASS A, TYPE 2 24"

STATION	OFFSET	ALIGNMENT	STATION	OFFSET	ALIGNMENT	LENGTH (FOOT)
340+00	LT	US24	340+98	LT	US24	100
					TOTAL	100

PIPE CULVERTS, CLASS A, TYPE 2 30"

STATION	OFFSET	ALIGNMENT	STATION	OFFSET	ALIGNMENT	LENGTH (FOOT)
8+54	RT	Cameron	8+54	RT	Cameron	9
					TOTAL	9

PIPE CULVERTS, CLASS A, TYPE 2 36"

STATION	OFFSET	ALIGNMENT	STATION	OFFSET	ALIGNMENT	LENGTH (FOOT)
11+11	RT	US24	11+11	RT	US24	18
					TOTAL	18

STORM SEWERS, CLASS A, TYPE 2 18"

STATION	OFFSET	ALIGNMENT	STATION	OFFSET	ALIGNMENT	LENGTH (FOOT)
336+32	RT	US24	336+51	RT	US24	76
336+32	LT	US24	336+32	RT	US24	18
339+45	RT	US24	339+64	RT	US24	94
339+45	LT	US24	339+45	RT	US24	6
341+00	RT	US24	341+00	RT	US24	60
					TOTAL	254

STORM SEWER REMOVAL 12"

STATION	OFFSET	ALIGNMENT	STATION	OFFSET	ALIGNMENT	LENGTH (FOOT)
336+13	RT	US24	336+64	RT	US24	93
339+00	RT	US24	339+36	RT	US24	63
340+81	RT	US24	340+83	RT	US24	54
					TOTAL	210

CONCRETE MEDIAN, TYPE SB-6.06

STATION	OFFSET	ALIGNMENT	STATION	OFFSET	ALIGNMENT	AREA (SQ FT)
10+51	CL	Cameron	12+00	CL	Cameron	977
					TOTAL	977

CONCRETE MEDIAN, TYPE SB-6.12

STATION	OFFSET	ALIGNMENT	STATION	OFFSET	ALIGNMENT	AREA (SQ FT)
336+03	CL	US24	336+53	CL	US24	636
339+27	CL	US24	340+08	CL	US24	217
					TOTAL	853

STEEL PLATE BEAM GUARD RAIL, TYPE A, 6 FOOT POSTS

STATION	OFFSET	ALIGNMENT	STATION	OFFSET	ALIGNMENT	LENGTH (FOOT)
11+25	LT	Cameron	11+75	LT	Cameron	50
11+60	RT	Cameron	11+98	RT	Cameron	37
339+27	LT	US24	340+15	LT	US24	88
339+80	RT	US24	341+93	RT	US24	213
340+97	LT	US24	341+35	LT	US24	38
					TOTAL	426

STEEL PLATE BEAM GUARD RAIL, TYPE D

STATION	OFFSET	ALIGNMENT	STATION	OFFSET	ALIGNMENT	LENGTH (FOOT)
321+26	CL	US24	329+23	CL	US24	797
330+51	CL	US24	334+84	CL	US24	433
341+36	CL	US24	351+64	CL	US24	1028
352+99	CL	US24	355+00	CL	US24	201
					TOTAL	2459

PLAN — SURVEYED / PLOTTED / ALIGNMENT CHECKED / ALL OF BM CHECKED / CADD FILE NAME / NOTE BOOK NO. / BY / DATE

PROFILE — SURVEYED / PLOTTED / GRADES CHECKED / ALIGNMENT CHECKED / STRUCTURE NOTATIONS CHKD / NOTE BOOK NO. / BY / DATE

TRAFFIC BARRIER TERMINAL, TYPE 2

STATION	OFFSET	ALIGNMENT	STATION	OFFSET	ALIGNMENT	EACH
11+98	RT	Cameron	12+10	RT	Cameron	1
341+93	RT	US24	342+05	RT	US24	1
					TOTAL	2

TRAFFIC BARRIER TERMINAL, TYPE 6

STATION	OFFSET	ALIGNMENT	STATION	OFFSET	ALIGNMENT	EACH
336+00	LT	US24	336+44	LT	US24	1
336+53	RT	US24	336+96	RT	US24	1
338+84	LT	US24	339+27	LT	US24	1
339+36	RT	US24	339+80	RT	US24	1
					TOTAL	4

TRAFFIC BARRIER TERMINAL, TYPE 1 (SPECIAL) TANGENT

STATION	OFFSET	ALIGNMENT	STATION	OFFSET	ALIGNMENT	EACH
334+29	RT	US24	334+79	RT	US24	1
8+71	LT	Cameron	9+21	LT	Cameron	1
11+75	LT	Cameron	12+25	LT	Cameron	1
18+33	RT	Wheeler	18+83	RT	Wheeler	1
18+33	LT	Wheeler	18+83	LT	Wheeler	1
341+35	LT	US24	341+85	LT	US24	1
					TOTAL	6

GUARDRAIL REMOVAL

STATION	OFFSET	ALIGNMENT	STATION	OFFSET	ALIGNMENT	FOOT
320+95	CL	US24	329+54	CL	US24	859
330+20	CL	US24	335+13	CL	US24	493
334+15	RT	US24	11+37	RT	Cameron	204
11+93	LT	Cameron	337+14	RT	US24	205
9+02	LT	Cameron	336+54	LT	US24	127
338+79	LT	US24	340+10	LT	US24	131
339+27	RT	US24	341+02	RT	US24	175
342+72	CL	US24	351+95	CL	US24	923
352+68	CL	US24	354+00	CL	US24	132
					TOTAL	3249

STEEL PLATE BEAM GUARD RAIL (SHORT RADIUS)

STATION	OFFSET	ALIGNMENT	STATION	OFFSET	ALIGNMENT	LENGTH (FOOT)
9+21	LT	Cameron	9+60	LT	Cameron	53
10+39	RT	Cameron	11+60	RT	Cameron	139
10+65	LT	Cameron	11+25	LT	Cameron	87
18+83	RT	Wheeler	19+51	RT	Wheeler	71
18+83	LT	Wheeler	19+51	LT	Wheeler	94
					TOTAL	444

SHOULDER RUMBLE STRIP

STATION	OFFSET	ALIGNMENT	STATION	OFFSET	ALIGNMENT	LENGTH (FT)
323+50.00	RT (INSIDE)	US24	334+98.00	RT (INSIDE)	US24	1148
330+38.00	RT (OUTSIDE)	US24	334+79.00	RT (OUTSIDE)	US24	441
331+50.00	LT (INSIDE)	US24	334+80.00	LT (INSIDE)	US24	330
332+00.00	LT (OUTSIDE)	US24	334+94.00	LT (OUTSIDE)	US24	294
336+05.00	LT (OUTSIDE)	US24	336+32.00	LT (OUTSIDE)	US24	27
336+67.00	RT (OUTSIDE)	US24	336+74.00	RT (OUTSIDE)	US24	7
339+07.00	LT (OUTSIDE)	US24	340+10.00	LT (OUTSIDE)	US24	103
339+48.00	RT (OUTSIDE)	US24	343+50.00	RT (OUTSIDE)	US24	402
341+03.00	LT (OUTSIDE)	US24	343+72.00	LT (OUTSIDE)	US24	269
341+15.00	RT (INSIDE)	US24	343+50.00	RT (INSIDE)	US24	235
340+80.00	LT (INSIDE)	US24	349+00.00	LT (INSIDE)	US24	820
349+00.00	RT (INSIDE)	US24	356+40.00	RT (INSIDE)	US24	740
					TOTAL	4816

EPOXY PAVEMENT MARKING - LINE 4"

STATION	OFFSET	ALIGNMENT	STATION	OFFSET	ALIGNMENT	LENGTH (FOOT)
319+30	LT	US24	8+25	RT	Cameron	1721
319+30	LT	US24	335+34	LT	US24	1608
309+00	RT	US24	335+34	RT	US24	2639
309+00	RT	US24	12+00	RT	Cameron	2776
309+00	RT	US24	359+80	RT	US24	1270
319+30	LT	US24	370+00	LT	US24	1268
330+40	RT	US24	332+80	RT	US24	60
8+25	LT	Cameron	19+10	RT	Wheeler	631
336+02	CL	US24	339+29	CL	US24	658
12+00	LT	Cameron	359+80	RT	US24	2503
340+77	LT	US24	370+00	LT	US24	2924
340+77	RT	US24	359+80	RT	US24	1909
19+10	LT	Wheeler	370+00	LT	US24	2973
336+32	RT	US24	337+52	RT	US24	30
341+15	LT	US24	343+64	LT	US24	62
8+25	CL	Cameron	9+27	CL	Cameron	25
10+49	CL	Cameron	12+00	CL	Cameron	307
19+10	CL	Wheeler	19+48	CL	Wheeler	78
					TOTAL	23442

PLAN — SURVEYED / PLOTTED / ALIGNMENT CHECKED / RT. OF WAY CHECKED / DGN FILE NAME — NOTE BOOK NO. — BY — DATE

PROFILE — SURVEYED / PLOTTED / GRADES CHECKED / B.M. NOTED / STRUCTURE NOTATIONS CHKD — NOTE BOOK NO. — BY — DATE

FILE NAME = @FILEL@	USER NAME = @USER@	DESIGNED ST	REVISED -
		DRAWN ST	REVISED -
	PLOT SCALE = @SCALE@	CHECKED FML	REVISED -
	PLOT DATE = @DATE@	DATE 10-15-2010	REVISED -

STATE OF ILLINOIS
DEPARTMENT OF TRANSPORTATION

SCHEDULE OF QUANTITIES
US-24 OVER LAMARSH CREEK

SCALE: N.T.S. | SHEET NO. 8 OF 9 SHEETS | STA. | TO STA.

F.A.P. RTE.	SECTION	COUNTY	TOTAL SHEETS	SHEET NO.
317	45BR-2	PEORIA	122	15
		CONTRACT NO. 68719		

FED. ROAD DIST. NO. | ILLINOIS | FED. AID PROJECT

TEMPORARY RAMP

DIRECTION	ALIGNMENT	PAVEMENT WIDTH (FT)	AREA (SQ FT)	AREA (SQ YD)
WB	US24	42	672	75
EB	US24	42	672	75
SB	Cameron	39	624	69
			TOTAL	219

REINFORCEMENT BARS, EPOXY COATED

STATION	OFFSET	ALIGNMENT	PIPE DIA (INCH)	WEIGHT (LB)
8+54.00	RT	Cameron	30	40
11+11.00	RT	Cameron	36	45
			TOTAL	85

CONCRETE COLLAR

STATION	OFFSET	ALIGNMENT	PIPE DIA (INCH)	SI CONCRETE (CU YD)
8+54.00	RT	Cameron	30	0.7
11+11.00	RT	Cameron	36	0.9
			TOTAL	1.6

EPOXY PAVEMENT MARKING - LETTERS AND SYMBOLS

STATION	OFFSET	ALIGNMENT	DESCRIPTION	AREA (SQ FT)
333+04.59	RT	US24	ARROW	15.6
333+84.59	RT	US24	ARROW	15.6
334+64.59	RT	US24	ARROW	15.6
336+61.47	LT	US24	ARROW	15.6
337+41.47	LT	US24	ARROW	15.6
338+21.47	LT	US24	ARROW	15.6
339+01.47	LT	US24	ARROW	15.6
339+81.47	LT	US24	ARROW	15.6
337+94.10	RT	US24	ARROW	15.6
338+74.10	RT	US24	ARROW	15.6
339+54.10	RT	US24	ARROW	15.6
			TOTAL	172

DOWEL BARS 1 1/2"

STATION	OFFSET	ALIGNMENT	FOOT	EACH
336+32	RT	US24	40	40
339+45	RT	US24	48	48
340+81	RT	US24	48	48
341+00	RT	US24	48	48
			TOTAL	184

AGGREGATE BASE COURSE, TYPE B 10"

STATION	OFFSET	ALIGNMENT	STATION	OFFSET	ALIGNMENT	AREA (SQ FT)	AREA (SQ YD)
8+25	CL	Cameron	9+60	CL	Cameron	2414.99	268.33
19+10	CL	Wheeler	19+61	CL	Wheeler	1751.93	194.66
						TOTAL	462.99

PAVED SHOULDER REMOVAL

STATION	OFFSET	ALIGNMENT	STATION	OFFSET	ALIGNMENT	AREA (SQ FT)	AREA (SQ YD)
330+38	RT	US24	11+47	RT	Cameron	6220.22	691
332+00	LT	US24	335+02	LT	US24	3009.83	334
330+38	CL	US24	335+29	CL	US24	10761.06	1196
11+99	LT	Cameron	337+14	RT	US24	2101.28	233
340+75	CL	US24	343+72	CL	US24	4081.27	453
339+09	RT	US24	343+50	RT	US24	4418.97	491
339+06	LT	US24	343+72	LT	US24	4535.94	504
						TOTAL	3903

MATERIAL TRANSFER DEVICE

STATION	OFFSET	ALIGNMENT	STATION	OFFSET	ALIGNMENT	AREA (SQ FT)	TON
330+38	RT	US24	336+59	RT	US24	21958	273
339+50	RT	US24	343+50	RT	US24	11565	144
332+00	LT	US24	336+30	LT	US24	12036	150
339+21	LT	US24	343+71	LT	US24	14725	183
330+38	RT	US24	336+59	RT	US24	21958	407
339+50	RT	US24	343+50	RT	US24	11565	208
332+00	LT	US24	336+30	LT	US24	12036	299
339+21	LT	US24	343+71	LT	US24	14725	297
						TOTAL	1961

STRIP REFLECTIVE CRACK CONTROL TREATMENT

STATION	OFFSET	ALIGNMENT	STATION	OFFSET	ALIGNMENT	LENGTH (FOOT)
330+38.00	RT	US24	336+59.00	RT	US24	621
332+00.00	LT	US24	336+30.00	LT	US24	430
335+00.00	RT	US24	336+25.00	RT	US24	125
335+00.00	LT	US24	336+39.00	LT	US24	139
339+21.00	LT	US24	343+71.00	LT	US24	450
339+50.00	RT	US24	343+50.00	RT	US24	400
339+27.00	LT	US24	343+15.00	LT	US24	388
339+43.00	RT	US24	341+08.00	RT	US24	165
8+25.00	CL	Cameron	9+60.00	CL	Cameron	135
19+10.00	CL	Wheeler	19+61.00	CL	Wheeler	51
					TOTAL	2904

FURNISHING AND ERECTING RIGHT-OF-WAY MARKERS

STATION	OFFSET	ALIGNMENT	EACH
10+90.00	RT	Cameron	1
12+00.00	RT	Cameron	1
11+53.80	LT	Cameron	1
12+52.50	LT	Cameron	1
		TOTAL	4

MOWING

FROM STATION	TO STATION	LENGTH (FT)	UNIT
330+38.00	343+72.00	1334	13.3
		x 3 APPLICATIONS	40
		TOTAL	40

PLAN — SURVEYED / PLOTTED / ALIGNMENT CHECKED / RTS. OF WAY CHECKED / CADD FILE NAME — NOTE BOOK NO. — BY — DATE

PROFILE — SURVEYED / PLOTTED / GRADES CHECKED / BRIDGE/STRUCTURE NOTATIONS CHKD — NOTE BOOK NO. — BY — DATE

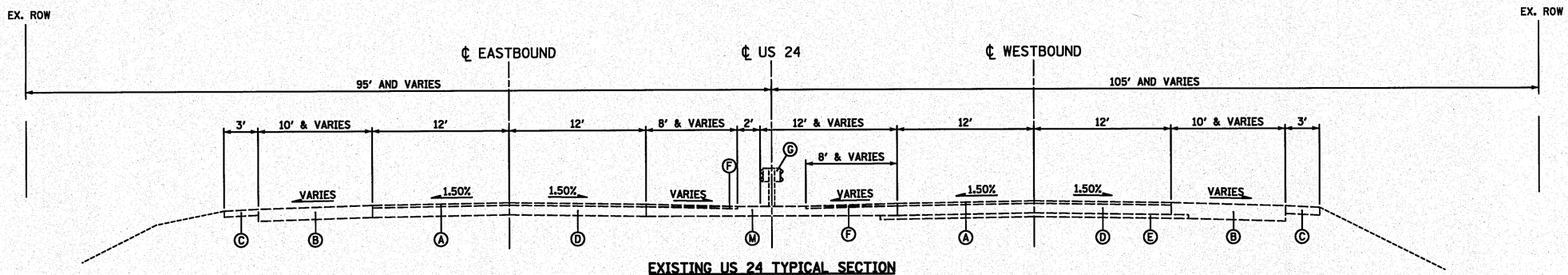

EXISTING US 24 TYPICAL SECTION

STA. 330+38 TO STA. 336+17
STA. 342+62 TO STA. 343+72

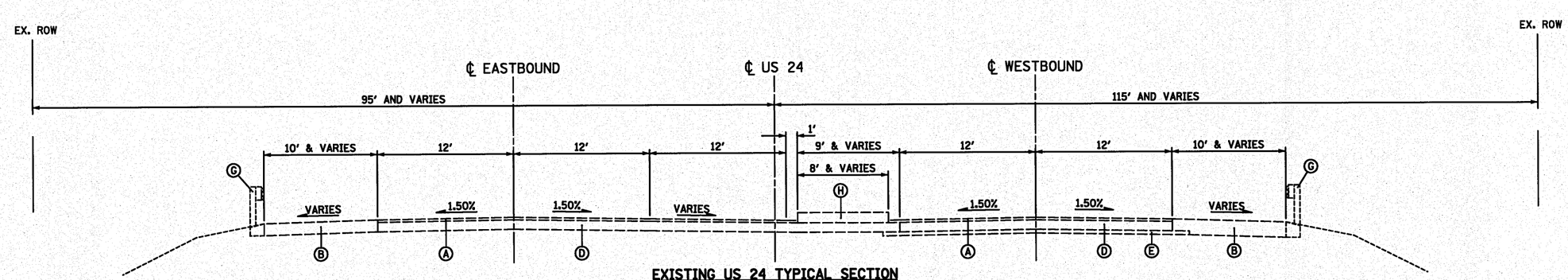

EXISTING US 24 TYPICAL SECTION

STA. 336+17 TO STA. 336+86
STA. 338+89 TO STA. 342+62

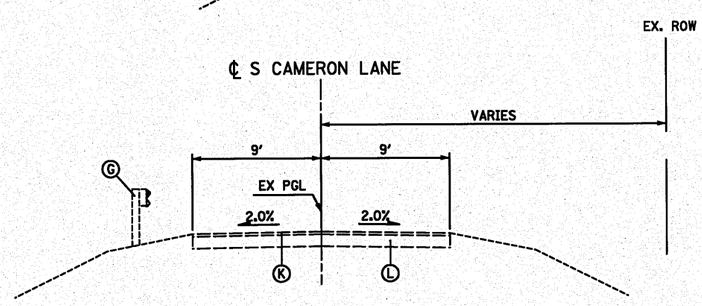

EXISTING S CAMERON LANE TYPICAL SECTION

STA. 8+25 TO STA. 9+60

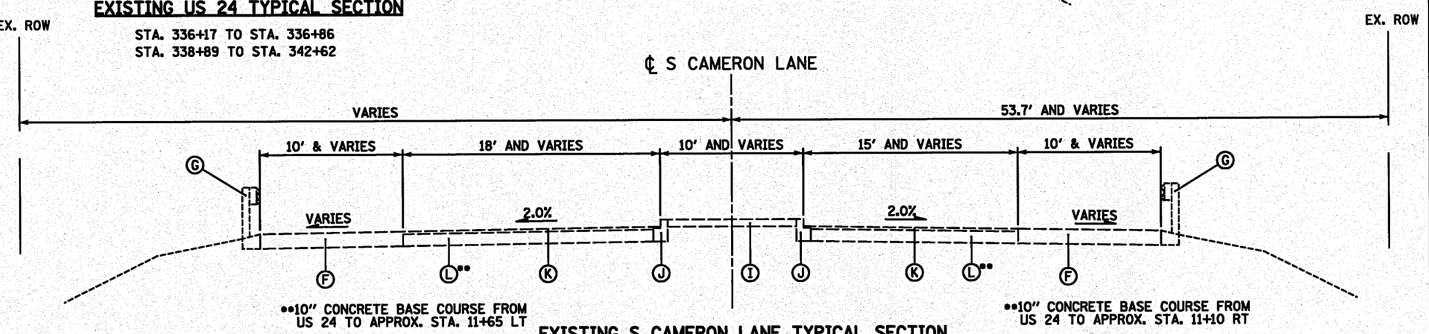

**10" CONCRETE BASE COURSE FROM US 24 TO APPROX. STA. 11+65 LT

**10" CONCRETE BASE COURSE FROM US 24 TO APPROX. STA. 11+10 RT

EXISTING S CAMERON LANE TYPICAL SECTION

STA. 10+35.5 TO STA. 12+00

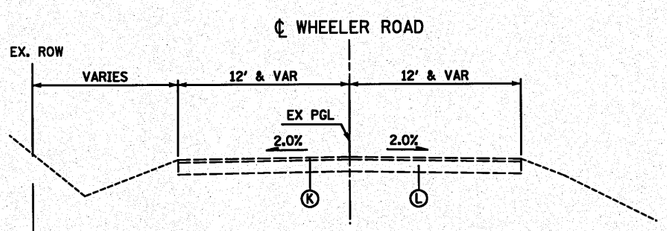

EXISTING WHEELER ROAD TYPICAL SECTION

STA. 17+50 TO STA. 19+61

LEGEND

- (A) EXISTING HMA SURFACE, 2 1/4" & VAR
- (B) EXISTING HMA SHOULDER, 8" & VAR
- (C) EXISTING AGGREGATE SHOULDER, 8" & VAR
- (D) EXISTING P.C.C. PAVEMENT, 10"
- (E) EXISTING STABILIZED SUB-BASE, 4"
- (F) EXISTING HMA SHOULDER
- (G) EXISTING GUARDRAIL
- (H) EXISTING CONCRETE MEDIAN, TYPE SB-6.12
- (I) EXISTING CONCRETE MEDIAN SURFACE, 4"
- (J) EXISTING CURB AND GUTTER, TYPE M-6.06
- (K) EXISTING HMA PAVEMENT, 3" & VAR
- (L) EXISTING AGGREGATE BASE COURSE, 8"
- (M) EXISTING STABALIZED SHOULDER

FILE NAME = ©FILEL©	USER NAME = ©USER©	DESIGNED - SEW	REVISED -
		DRAWN - SEW	REVISED -
	PLOT SCALE = ©SCALE©	CHECKED - FML	REVISED -
	PLOT DATE = ©DATE©	DATE - 10-15-2010	REVISED -

STATE OF ILLINOIS
DEPARTMENT OF TRANSPORTATION

EXISTING TYPICAL SECTIONS
US ROUTE 24 OVER LAMARSH CREEK

SCALE: NONE | SHEET NO. 1 OF 1 SHEETS | STA. TO STA.

F.A.P. RTE.	SECTION	COUNTY	TOTAL SHEETS	SHEET NO.
317	45BR-2	PEORIA	122	17
		CONTRACT NO. 68719		

FED. ROAD DIST. NO. | ILLINOIS | FED. AID PROJECT

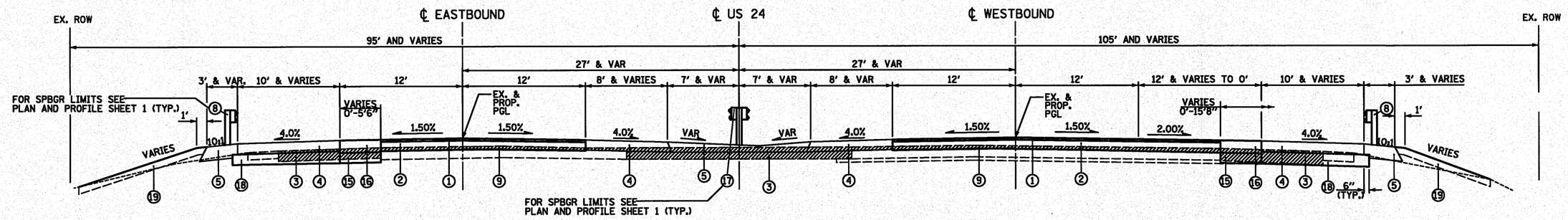

EASTBOUND STA.
STA. 332+00 TO STA. 336+02
STA. 340+09 TO STA. 343+72

PROPOSED US 24 TYPICAL SECTION

WESTBOUND STA.
STA. 330+38 TO STA. 336+02
STA. 340+09 TO STA. 343+50

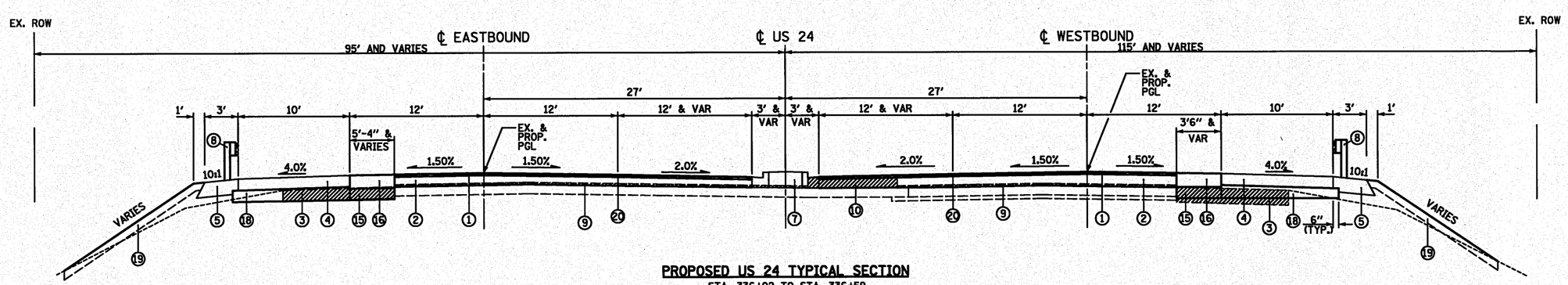

PROPOSED US 24 TYPICAL SECTION
STA. 336+02 TO STA. 336+59
STA. 339+21 TO STA. 340+09

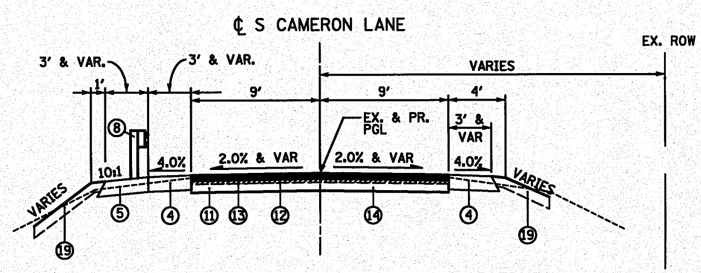

PROPOSED S CAMERON LANE TYPICAL SECTION
STA. 8+25 TO STA. 9+60

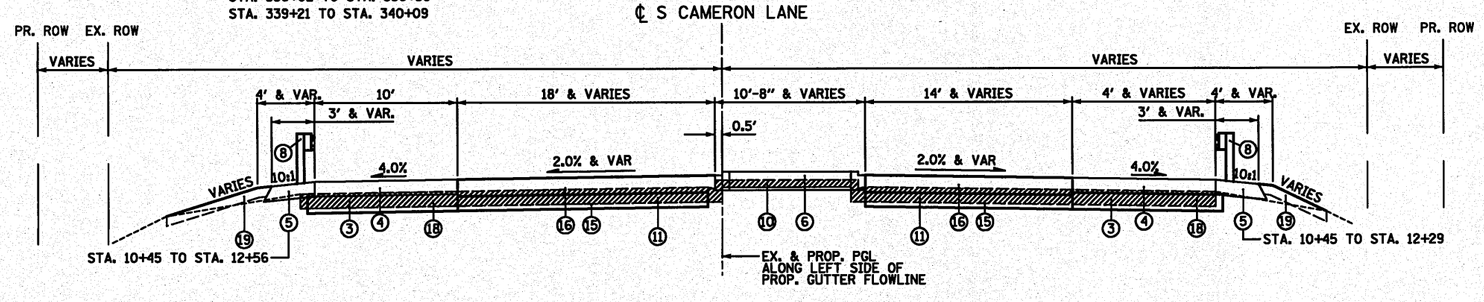

PROPOSED S CAMERON LANE TYPICAL SECTION
STA. 10+45 TO STA. 11+99

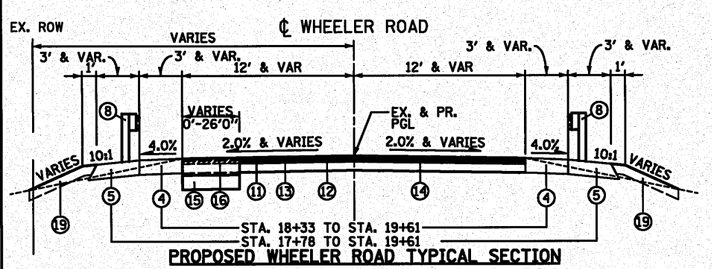

PROPOSED WHEELER ROAD TYPICAL SECTION
STA. 19+10 TO STA. 19+61

LEGEND

1. POLYMERIZED HMA SURFACE COURSE, MIX "E", N70, 1 3/4"
2. POLYMERIZED HMA BINDER COURSE, IL-19.0, N70, ≥ 2 1/4"
3. PAVED SHOULDER REMOVAL
4. HMA SHOULDER, 8"
5. AGGREGATE SHOULDER, 8" (WITHOUT GUARDRAIL) GUARDRAIL AGGREGATE EROSION CONTROL, 8" (WITH GUARDRAIL)
6. CONCRETE MEDIAN TYPE SB-6.06
7. CONCRETE MEDIAN TYPE SB-6.12
8. STEEL PLATE BEAM GUARDRAIL, TYPE A
9. HOT-MIX ASPHALT SURFACE REMOVAL, VARIABLE DEPTH (VARIES 1" MIN. TO 4" MAX. AT PROPOSED ℄)
10. CONCRETE MEDIAN REMOVAL
11. PAVEMENT REMOVAL
12. HMA SURFACE COURSE, MIX D, N50, 2"
13. HMA BINDER COURSE, IL 19.0, N50, 2 1/4"
14. AGGREGATE BASE COURSE, TY B, 10"
15. SUBBASE GRANULAR MATERIAL, TYPE A 12" (PLACED UNDER 16)
16. HMA PAVEMENT (FULL-DEPTH), 13 1/2" (SEE BITUMINOUS MIXTURES TABLE FOR BREAKDOWN OF LIFTS)
17. STEEL PLATE BEAM GUARDRAIL, TYPE D
18. SUBBASE GRANULAR MATERIAL, TYPE C, 17 1/2" (PLACED UNDER 4)
19. TOPSOIL FURNISH AND PLACE, 4"
20. STRIP REFLECTIVE CRACK CONTROL TREATMENT

FILE NAME = ©FILEL©	USER NAME = ©USER©	DESIGNED - SEW	REVISED -	STATE OF ILLINOIS DEPARTMENT OF TRANSPORTATION	PROPOSED TYPICAL SECTIONS US ROUTE 24 OVER LAMARSH CREEK	F.A.P. RTE.	SECTION	COUNTY	TOTAL SHEETS	SHEET NO.
		DRAWN - SEW	REVISED -			317	45BR-2	PEORIA	122	18
	PLOT SCALE = ©SCALE©	CHECKED - FML	REVISED -					CONTRACT NO. 68719		
	PLOT DATE = ©DATE©	DATE - 10-15-2010	REVISED -		SCALE: NONE / SHEET NO. 1 OF 1 SHEETS / STA. / TO STA.	FED. ROAD DIST. NO.	ILLINOIS	FED. AID PROJECT		

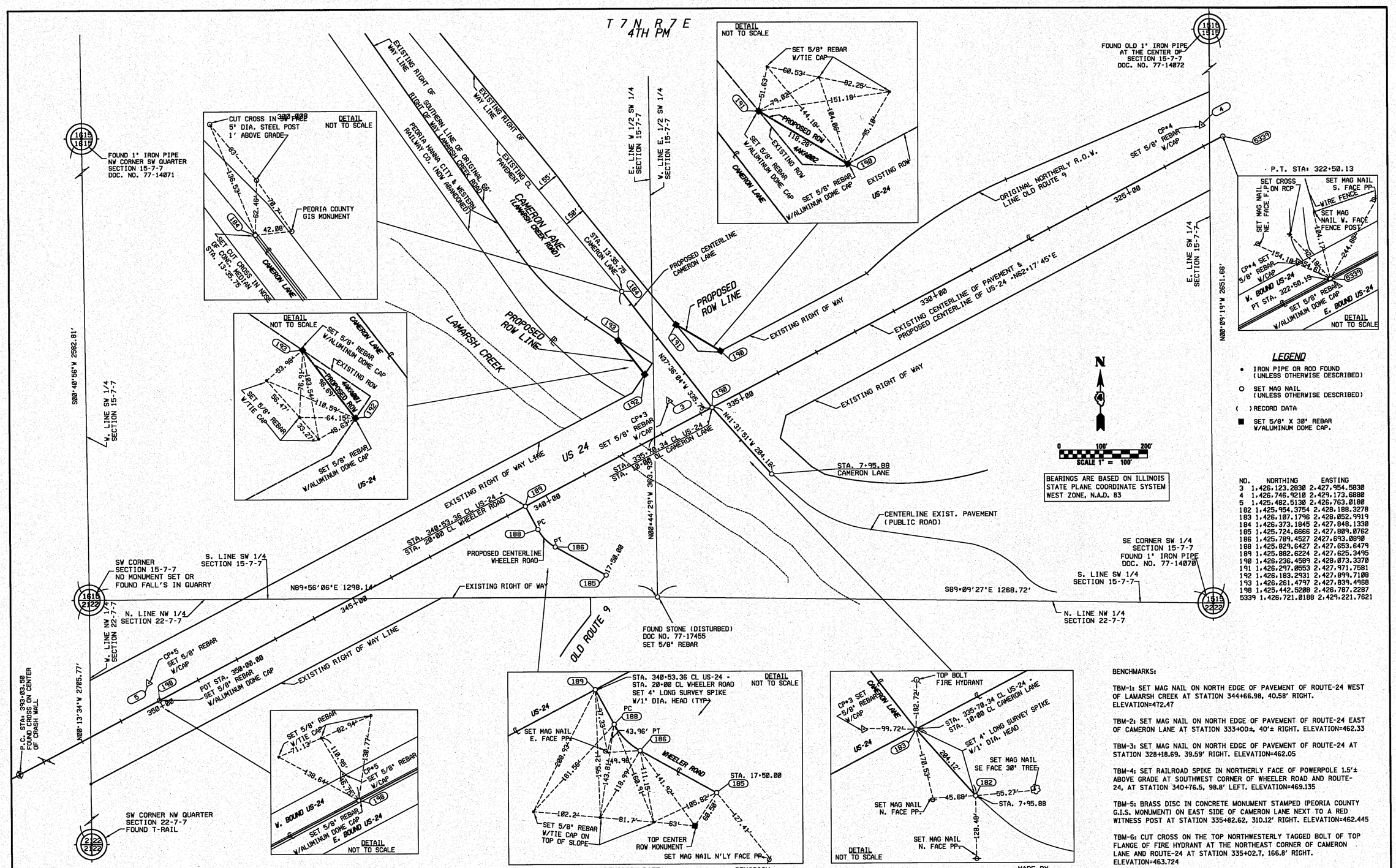

LEGEND

- ● IRON PIPE OR ROD FOUND (UNLESS OTHERWISE DESCRIBED)
- ○ SET MAG NAIL (UNLESS OTHERWISE DESCRIBED)
- ( ) RECORD DATA
- ■ SET 5/8" X 30" REBAR W/ALUMINUM DOME CAP.

NO.	NORTHING	EASTING
3	1,426,123.2830	2,427,954.5830
4	1,426,746.9210	2,429,173.6880
5	1,425,482.5130	2,426,763.0180
182	1,425,954.3754	2,428,188.3278
183	1,426,107.1796	2,428,052.9919
184	1,426,373.1845	2,427,848.1330
185	1,425,724.6666	2,427,889.0762
186	1,425,789.4527	2,427,693.0890
188	1,425,829.6427	2,427,653.6479
189	1,425,882.6224	2,427,625.3495
190	1,426,236.4589	2,428,073.3370
191	1,426,297.0653	2,427,971.7581
192	1,426,183.2931	2,427,899.7100
193	1,426,261.4797	2,427,839.4968
198	1,425,442.5208	2,426,787.2287
5339	1,426,721.0188	2,429,221.7621

BENCHMARKS:

TBM-1: SET MAG NAIL ON NORTH EDGE OF PAVEMENT OF ROUTE-24 WEST OF LAMARSH CREEK AT STATION 344+66.98, 40.58' RIGHT. ELEVATION=472.47

TBM-2: SET MAG NAIL ON NORTH EDGE OF PAVEMENT OF ROUTE-24 EAST OF CAMERON LANE AT STATION 333+00±, 40'± RIGHT. ELEVATION=462.33

TBM-3: SET MAG NAIL ON NORTH EDGE OF PAVEMENT OF ROUTE-24 AT STATION 328+18.69, 39.59' RIGHT. ELEVATION=462.05

TBM-4: SET RAILROAD SPIKE IN NORTHERLY FACE OF POWERPOLE 1.5'± ABOVE GRADE AT SOUTHWEST CORNER OF WHEELER ROAD AND ROUTE-24, AT STATION 340+76.5, 98.8' LEFT. ELEVATION=469.135

TBM-5: BRASS DISC IN CONCRETE MONUMENT STAMPED (PEORIA COUNTY G.I.S. MONUMENT) ON EAST SIDE OF CAMERON LANE NEXT TO A RED WITNESS POST AT STATION 335+82.62, 310.12' RIGHT. ELEVATION=462.445

TBM-6: CUT CROSS ON THE TOP NORTHWESTERLY TAGGED BOLT OF TOP FLANGE OF FIRE HYDRANT AT THE NORTHEAST CORNER OF CAMERON LANE AND ROUTE-24 AT STATION 335+02.7, 166.8' RIGHT. ELEVATION=463.724

FILE NAME = $FILEL$	USER NAME = $USER$	DESIGNED -	REVISED -
		DRAWN -	REVISED -
	PLOT SCALE = $SCALE$	CHECKED -	REVISED -
	PLOT DATE = $DATE$	DATE - 10-15-2010	REVISED -

STATE OF ILLINOIS
DEPARTMENT OF TRANSPORTATION

HORIZONTAL ALIGNMENT, TIES, AND BENCHMARKS
US-24 OVER LAMARSH CREEK

SCALE: 1" = 100' | SHEET NO. 1 OF 1 SHEETS | STA. --- TO STA. ---

F.A.P. RTE.	SECTION	COUNTY	TOTAL SHEETS	SHEET NO.
317	45BR-2	PEORIA	122	19
		CONTRACT NO. 68719		
		ILLINOIS FED. AID PROJECT		

STEEL PLATE BEAM GUARD RAIL, TYPE A
11+25.00, 28.5' LT. - 11+75.00, 28.5' LT.
11+60.30, 31.5' RT. - 11+97.76, 29.9' RT.
339+27.28, 49.0' LT. - 340+14.78, 49.0' LT.
339+80.05, 49.0' RT. - 341+92.54, 47.5' RT.
340+97.22, 49.0' LT. - 341+34.71, 48.6' LT.

STEEL PLATE BEAM GUARD RAIL, TYPE D
321+26.00, CL - 329+23.00, CL
330+51.00, CL - 334+83.50, CL
341+35.85, 1.4' RT. - 351+64.00 CL
352+99.00, CL - 355+00.00, CL

STEEL PLATE BEAM GUARD RAIL (SHORT RADIUS)
9+21.14, 12.0' LT. - 9+59.51, 40.7' LT.
10+38.51, 99.3' RT. - 11+60.30, 31.5' RT.
10+64.60, 72.1' LT. - 11+25.00, 28.5' LT.
18+82.85, 15.0' RT. - 19+50.75, 35.8' RT.
18+82.85, 15.0' LT. - 19+51.31, 43.6' LT.

TRAFFIC BARRIER TERMINAL, TYPE 1 (SPECIAL) TANGENT
334+29.16, 56.0' RT. - 334+79.16, 55.0' RT.
8+71.14, 13.0' LT. - 9+21.14, 12.0' LT.
11+75.00, 28.5 LT. - 12+25.00, 29.5' LT.
18+32.85, 16.0' RT. - 18+82.85, 15.0' RT.
18+32.85, 16.0' LT. - 18+82.85, 15.0' LT.
341+34.71, 48.6' LT. - 341+84.71, 48.6' LT.

TRAFFIC BARRIER TERMINAL, TYPE 2
11+97.76, 29.9' RT. - 12+10.25, 29.4' RT.
341+92.54, 47.5' RT. - 342+05.06, 48.2' RT.

TRAFFIC BARRIER TERMINAL, TYPE 6
336+00.17, 49.0' LT. - 336+43.92, 49.0' LT.
336+52.50, 51.2' RT. - 336+96.03, 49.0' RT.
338+83.53, 49.0' LT. - 339+27.28, 49.0' LT.
339+36.30, 49.0' RT. - 339+80.05, 49.0' RT.

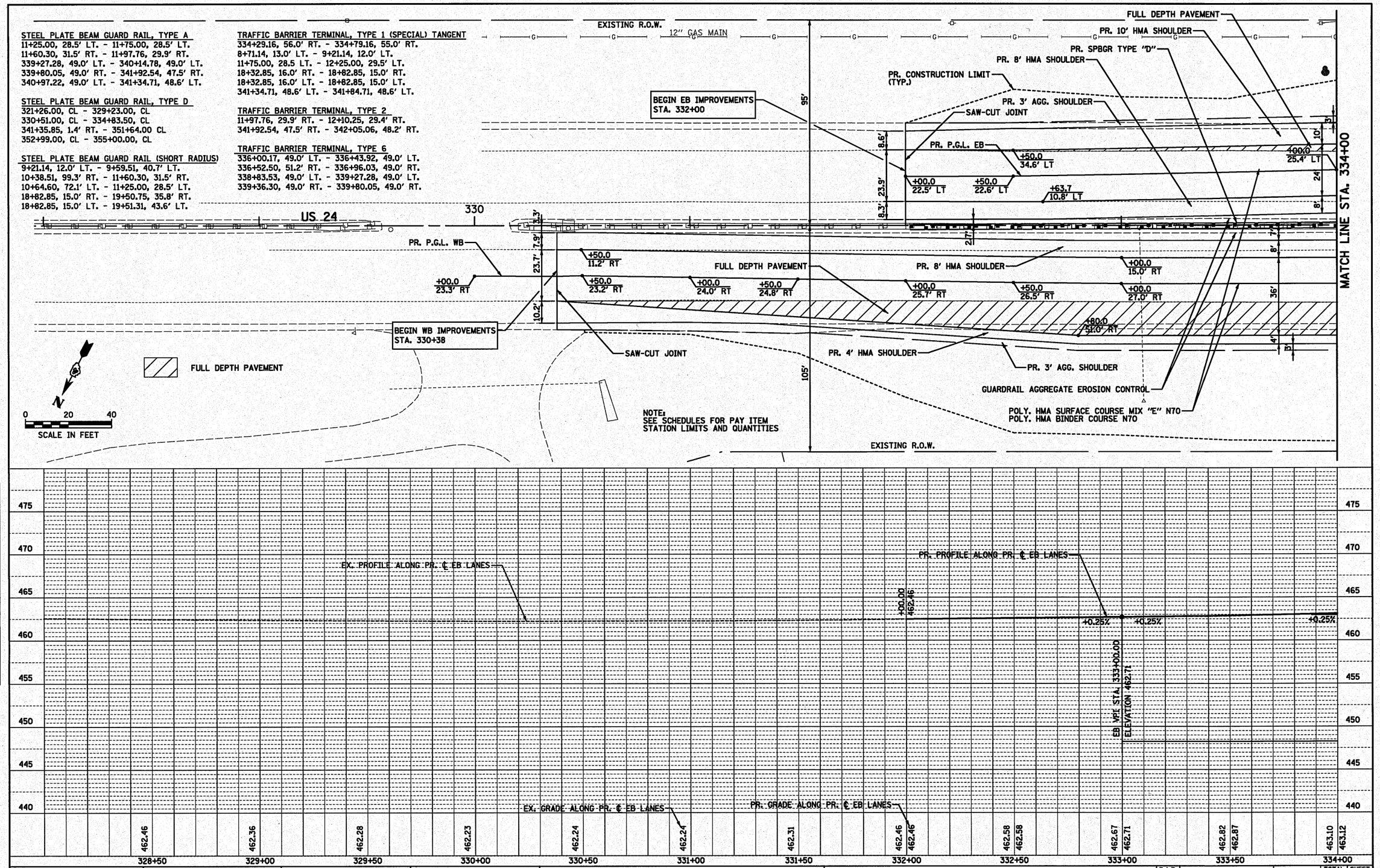

PLAN
SURVEYED
PLOTTED
ALIGNMENT CHECKED
RT. OF WAY CHECKED
CADD FILE NAME
NOTE BOOK NO.
BY
DATE

PROFILE
SURVEYED
PLOTTED
GRADES CHECKED
B.M. NOTED
STRUCTURE NOTAT'NS CH'KD
NOTE BOOK NO.
BY
DATE

FILE NAME = ©FILEL©	USER NAME = ©USER©	DESIGNED ST	REVISED -
		DRAWN ST	REVISED -
	PLOT SCALE = ©SCALE©	CHECKED FML	REVISED -
	PLOT DATE = ©DATE©	DATE 10-15-2010	REVISED -

STATE OF ILLINOIS
DEPARTMENT OF TRANSPORTATION

PROPOSED PLAN AND PROFILE
US ROUTE 24 EB OVER LAMARSH CREEK

SCALE: 1" = 20' | SHEET NO. 1 OF 6 SHEETS | STA. 328+00 TO STA. 334+00

F.A.P. RTE.	SECTION	COUNTY	TOTAL SHEETS	SHEET NO.
317	45BR-2	PEORIA	122	20
		CONTRACT NO. 68719		

FED. ROAD DIST. NO. | ILLINOIS | FED. AID PROJECT

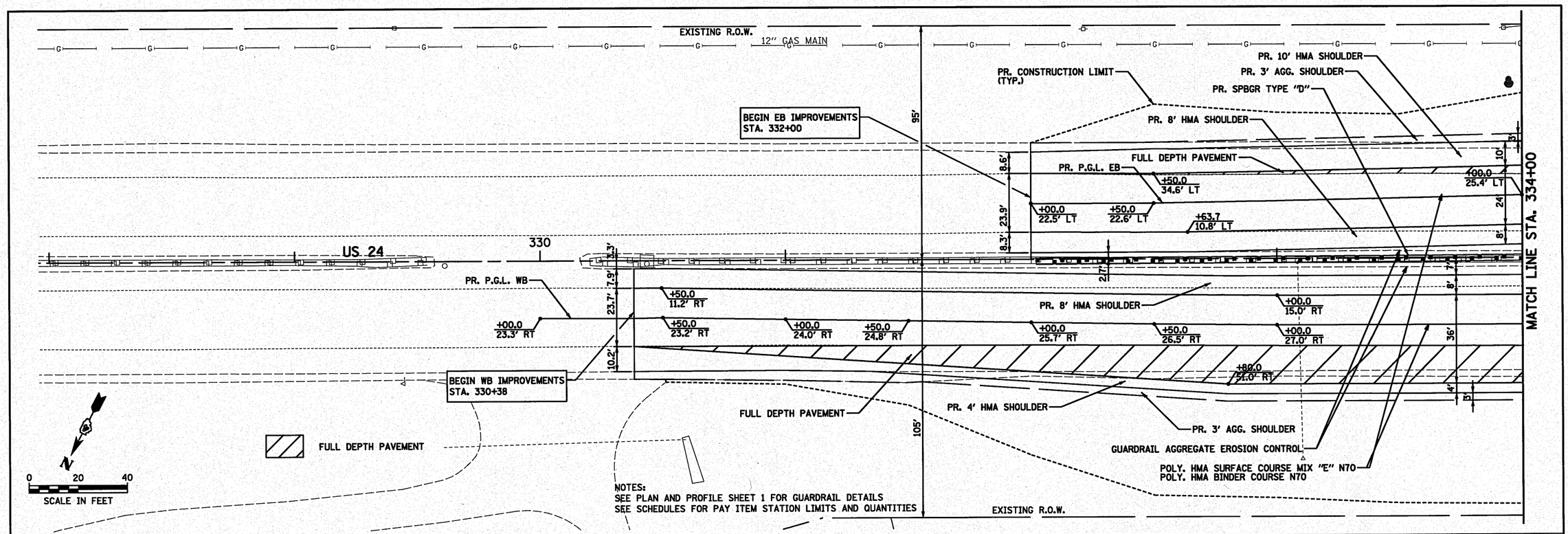

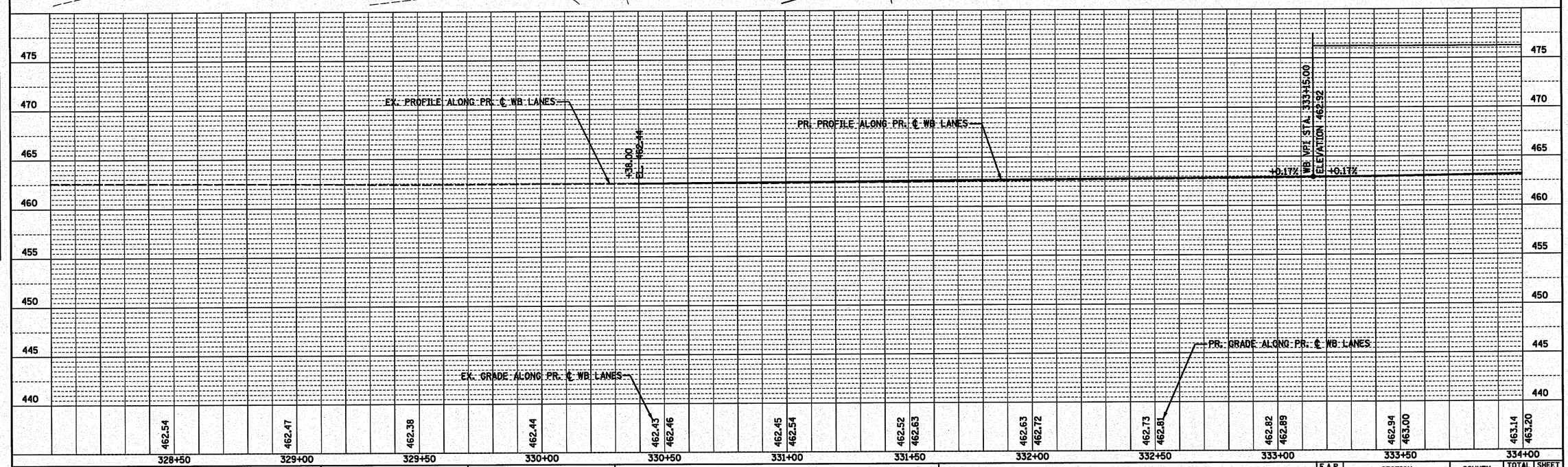

PLAN	BY	DATE
SURVEYED		
PLOTTED		
ALIGNMENT CHECKED		
RT. OF WAY CHECKED		
NOTE BOOK NO.	200 FILE NAME	

PROFILE	BY	DATE
SURVEYED		
PLOTTED		
GRADES CHECKED		
NOTE BOOK NO.	STRUCTURE NOTATIONS CHKD	

FILE NAME = ©FILE1©	USER NAME = ©USER©	DESIGNED ST	REVISED -
		DRAWN ST	REVISED -
	PLOT SCALE = ©SCALE©	CHECKED FML	REVISED -
	PLOT DATE = ©DATE©	DATE 10-15-2010	REVISED -

STATE OF ILLINOIS
DEPARTMENT OF TRANSPORTATION

PROPOSED PLAN AND PROFILE
US ROUTE 24 WB OVER LAMARSH CREEK

SCALE: 1" = 20' | SHEET NO. 2 OF 6 SHEETS | STA. 328+00 TO STA. 334+00

F.A.P. RTE.	SECTION	COUNTY	TOTAL SHEETS	SHEET NO.
317	45BR-2	PEORIA	122	21
		CONTRACT NO. 68719		
FED. ROAD DIST. NO.	ILLINOIS	FED. AID PROJECT		

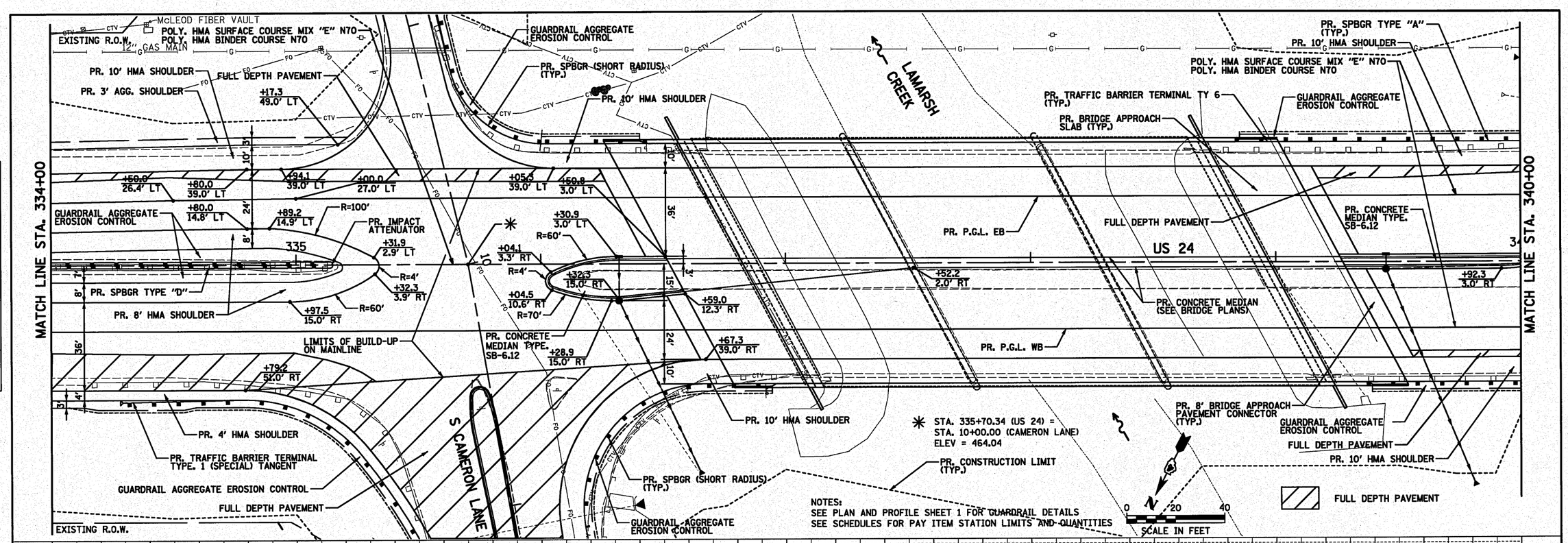

NOTES:
SEE PLAN AND PROFILE SHEET 1 FOR GUARDRAIL DETAILS
SEE SCHEDULES FOR PAY ITEM STATION LIMITS AND QUANTITIES

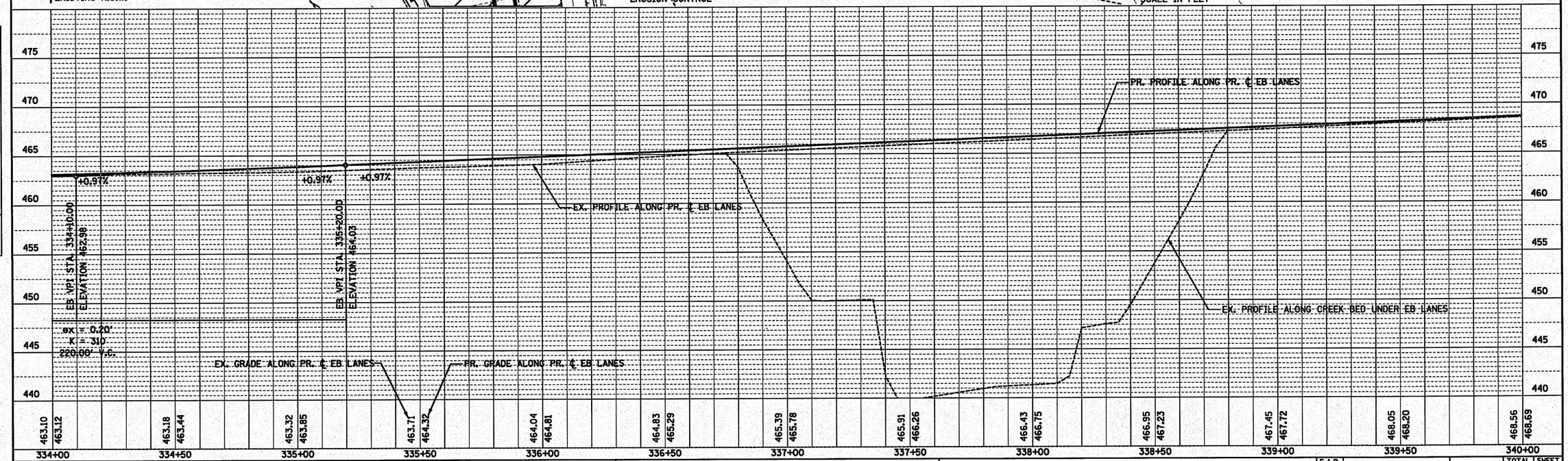

FILE NAME = ©FILE©	USER NAME = ©USER©	DESIGNED ST	REVISED -
		DRAWN ST	REVISED -
	PLOT SCALE = ©SCALE©	CHECKED FML	REVISED -
	PLOT DATE = ©DATE©	DATE 10-15-2010	REVISED -

STATE OF ILLINOIS
DEPARTMENT OF TRANSPORTATION

PROPOSED PLAN AND PROFILE
US ROUTE 24 EB OVER LAMARSH CREEK

SCALE: 1" = 20' | SHEET NO. 3 OF 6 SHEETS | STA. 334+00 TO STA. 340+00

F.A.P. RTE.	SECTION	COUNTY	TOTAL SHEETS	SHEET NO.
317	45BR-2	PEORIA	122	22
		CONTRACT NO. 68719		

FED. ROAD DIST. NO. | ILLINOIS | FED. AID PROJECT

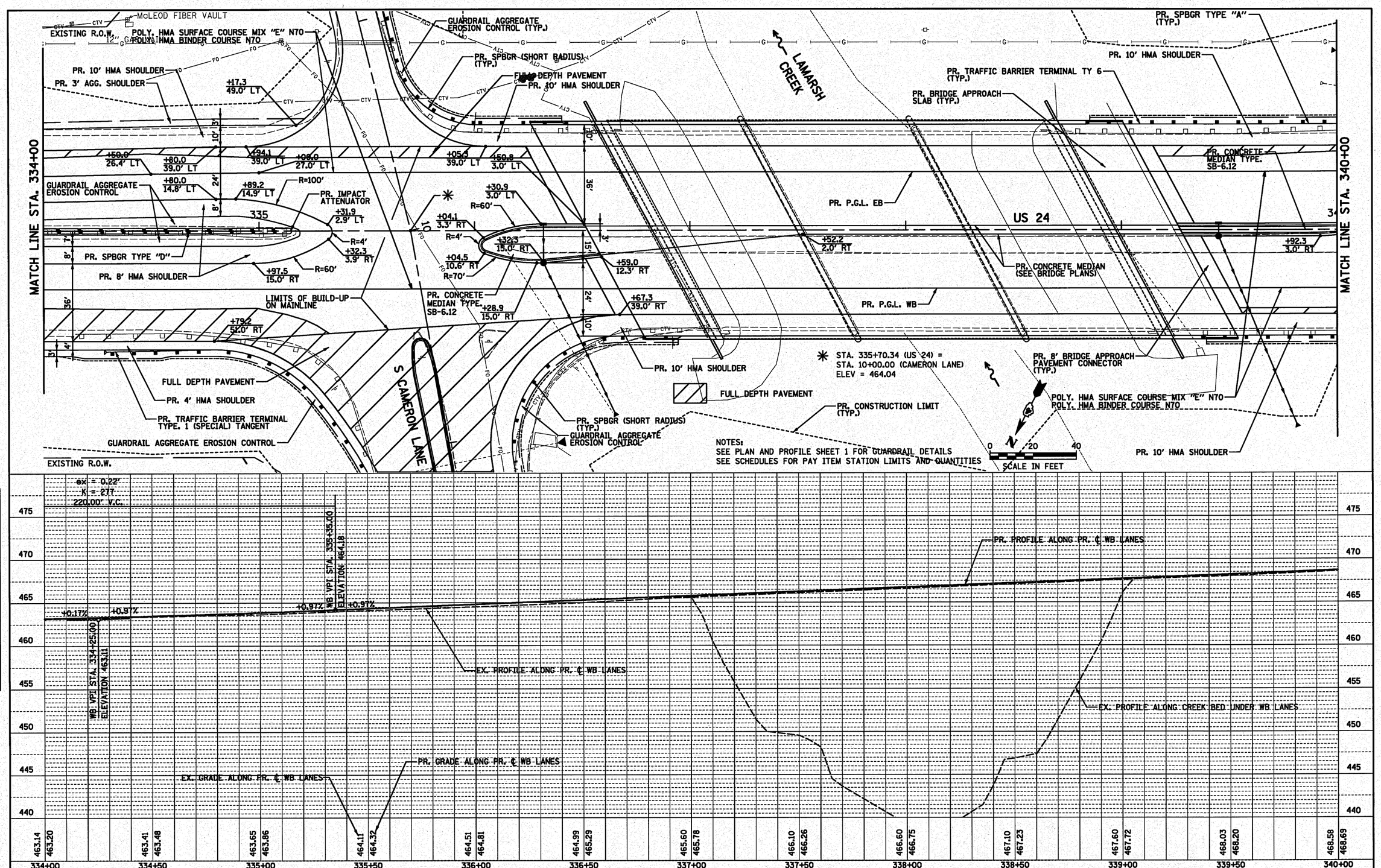

FILE NAME = ©FILE©	USER NAME = ©USER©	DESIGNED ST	REVISED -
		DRAWN ST	REVISED -
	PLOT SCALE = ©SCALE©	CHECKED FML	REVISED -
	PLOT DATE = ©DATE©	DATE 10-15-2010	REVISED -

STATE OF ILLINOIS
DEPARTMENT OF TRANSPORTATION

PROPOSED PLAN AND PROFILE
US ROUTE 24 WB OVER LAMARSH CREEK

SCALE: 1" = 20' | SHEET NO. 4 OF 6 SHEETS | STA. 334+00 TO STA. 340+00

F.A.P. RTE.	SECTION	COUNTY	TOTAL SHEETS	SHEET NO.
317	45BR-2	PEORIA	122	23
		CONTRACT NO. 68719		

FED. ROAD DIST. NO. | ILLINOIS | FED. AID PROJECT

PLAN: SURVEYED | PLOTTED | ALIGNMENT CHECKED | RT. OF WAY CHECKED | CADD FILE NAME | NOTE BOOK NO. | BY | DATE

PROFILE: SURVEYED | PLOTTED | GRADES CHECKED | B.M. NOTED | STRUCTURE NOTATIONS CHKD | NOTE BOOK NO. | BY | DATE

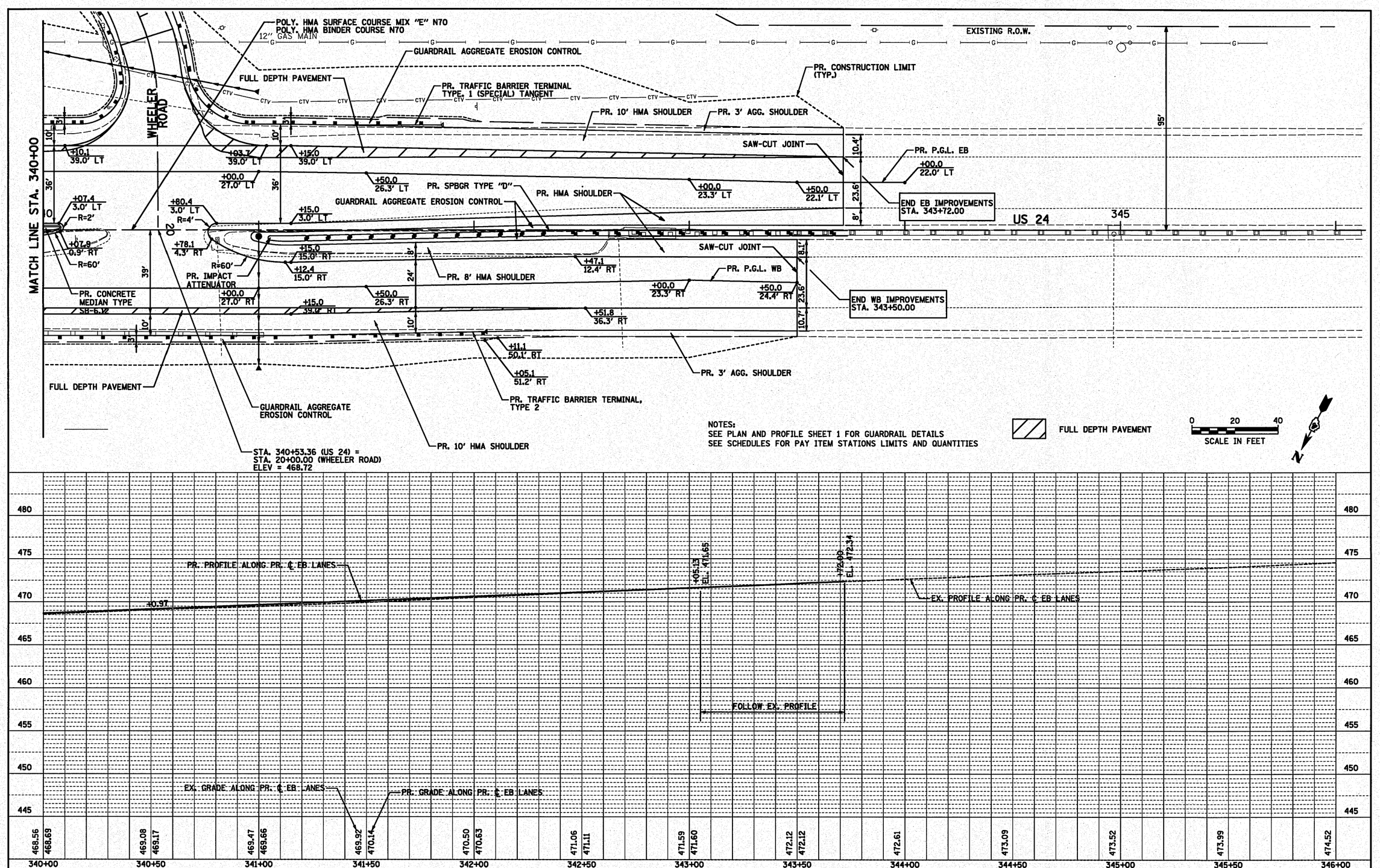

FILE NAME = ©FILE1©	USER NAME = ©USER©	DESIGNED ST	REVISED -
		DRAWN ST	REVISED -
	PLOT SCALE = ©SCALE©	CHECKED FML	REVISED -
	PLOT DATE = ©DATE©	DATE 10-15-2010	REVISED -

STATE OF ILLINOIS
DEPARTMENT OF TRANSPORTATION

PROPOSED PLAN AND PROFILE
US ROUTE 24 EB OVER LAMARSH CREEK

SCALE: 1" = 20' | SHEET NO. 5 OF 6 SHEETS | STA. 340+00 TO STA. 346+00

F.A.P. RTE.	SECTION	COUNTY	TOTAL SHEETS	SHEET NO.
317	45BR-2	PEORIA	122	24
		CONTRACT NO. 68719		

FED. ROAD DIST. NO. | ILLINOIS | FED. AID PROJECT

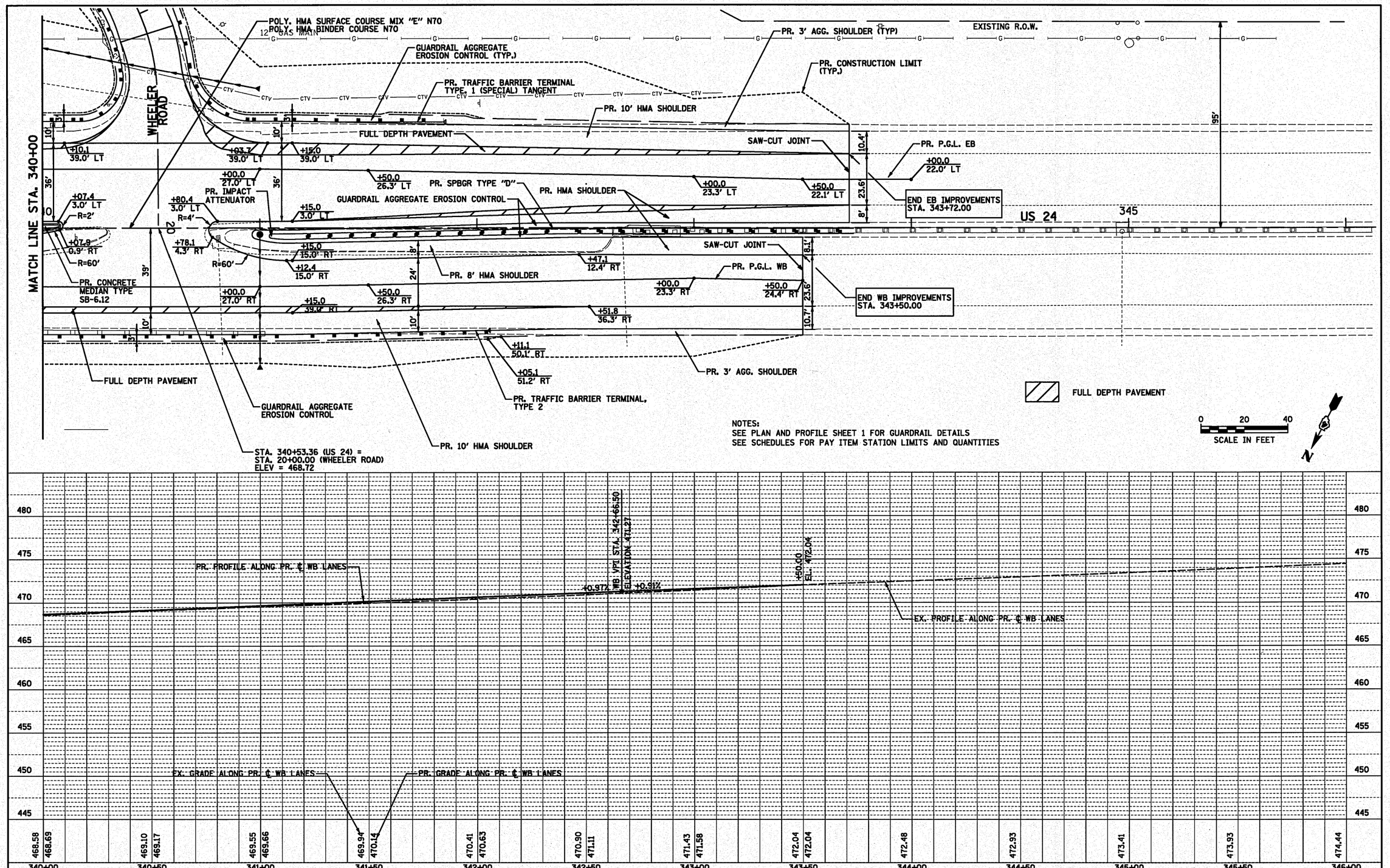

FILE NAME = ©FILE©	USER NAME = ©USER©	DESIGNED ST	REVISED -
		DRAWN ST	REVISED -
	PLOT SCALE = ©SCALE©	CHECKED FML	REVISED -
	PLOT DATE = ©DATE©	DATE 10-15-2010	REVISED -

STATE OF ILLINOIS
DEPARTMENT OF TRANSPORTATION

PROPOSED PLAN AND PROFILE
US ROUTE 24 WB OVER LAMARSH CREEK

SCALE: 1" = 20' | SHEET NO. 6 OF 6 SHEETS | STA. 340+00 TO STA. 346+00

F.A.P. RTE.	SECTION	COUNTY	TOTAL SHEETS	SHEET NO.
317	45BR-2	PEORIA	122	25
		CONTRACT NO. 68719		

FED. ROAD DIST. NO. | ILLINOIS | FED. AID PROJECT

NOTES:
SEE PLAN AND PROFILE SHEET 1 FOR GUARDRAIL DETAILS
SEE SCHEDULES FOR PAY ITEM STATIONS LIMITS AND QUANTITES

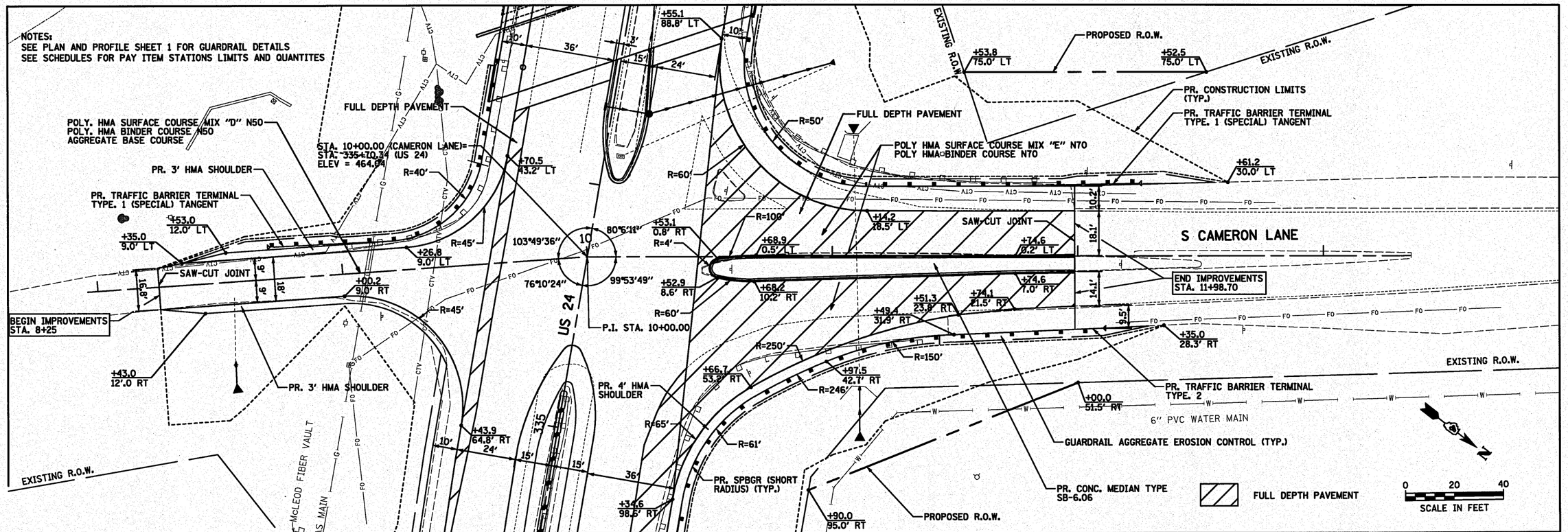

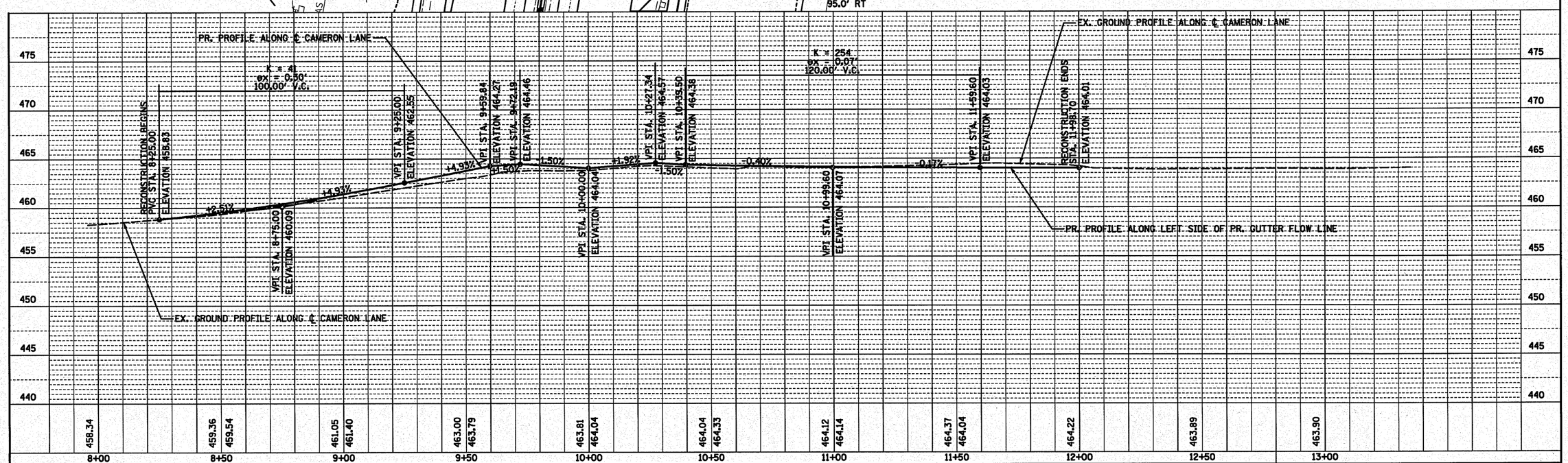

FILE NAME = ⊕FILE⊕	USER NAME = ⊕USER⊕	DESIGNED ST	REVISED -
		DRAWN ST	REVISED -
	PLOT SCALE = ⊕SCALE⊕	CHECKED FML	REVISED -
	PLOT DATE = ⊕DATE⊕	DATE 10-15-2010	REVISED -

STATE OF ILLINOIS
DEPARTMENT OF TRANSPORTATION

PROPOSED PLAN AND PROFILE
S CAMERON LANE

SCALE: 1" = 20' | SHEET NO. 1 OF 1 SHEETS | STA. 7+95.88 TO STA. 13+35.75

F.A.P. RTE.	SECTION	COUNTY	TOTAL SHEETS	SHEET NO.
317	45BR-2	PEORIA	122	26
		CONTRACT NO. 68719		

FED. ROAD DIST. NO. | ILLINOIS | FED. AID PROJECT

PLAN: SURVEYED | PLOTTED | DRAWN | CHECKED | RT. OF WAY CHECKED | CADD FILE NAME | NOTE BOOK NO. | BY | DATE

PROFILE: SURVEYED | PLOTTED | DRAWN | CHECKED | STRUCTURE NOTATNS CHKD | NOTE BOOK NO. | BY | DATE

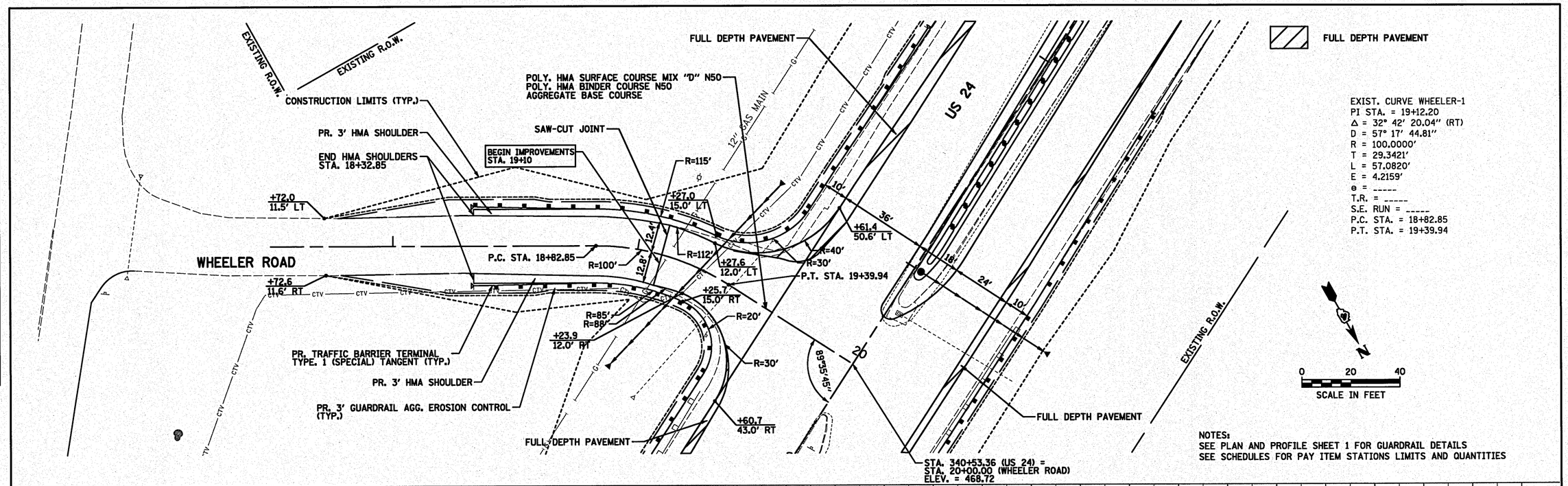

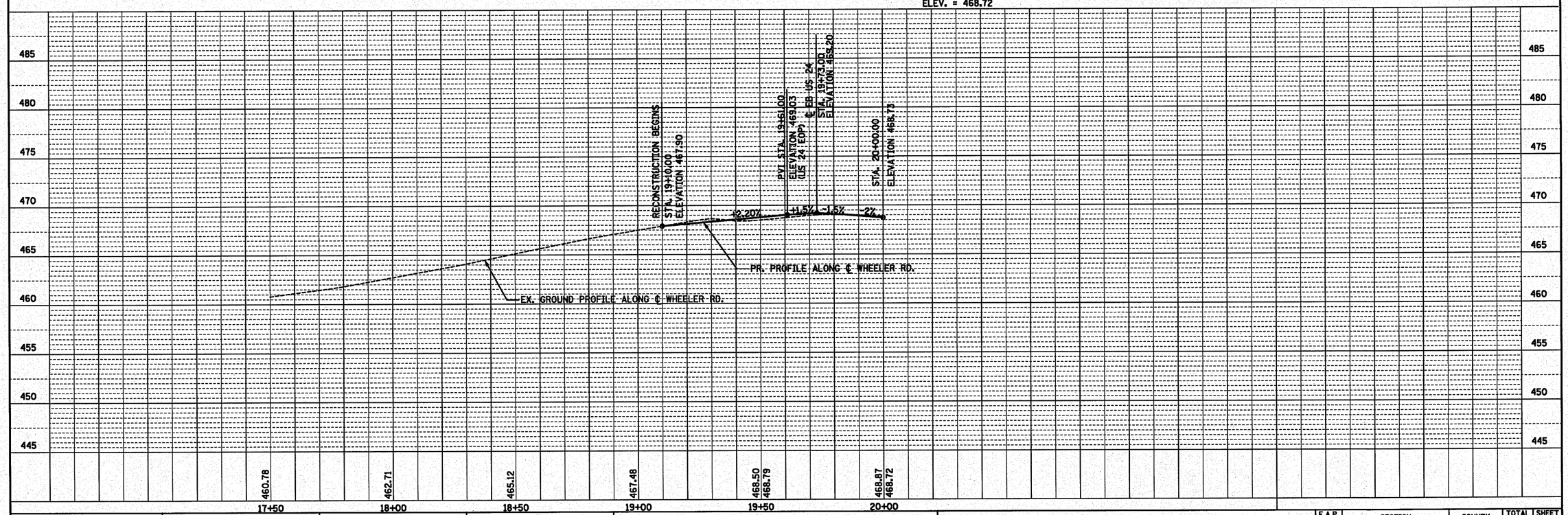

FILE NAME = ©FILE1©	USER NAME = ©USER©	DESIGNED ST	REVISED -
		DRAWN ST	REVISED -
	PLOT SCALE = ©SCALE©	CHECKED FML	REVISED -
	PLOT DATE = ©DATE©	DATE 10-15-2010	REVISED -

STATE OF ILLINOIS
DEPARTMENT OF TRANSPORTATION

PROPOSED PLAN AND PROFILE
WHEELER ROAD

SCALE: 1" = 20' | SHEET NO. 1 OF 1 SHEETS | STA. 17+50 TO STA. 20+00

F.A.P. RTE.	SECTION	COUNTY	TOTAL SHEETS	SHEET NO.
317	45BR-2	PEORIA	122	27
		CONTRACT NO. 68719		
FED. ROAD DIST. NO.	ILLINOIS	FED. AID PROJECT		

PLAN — SURVEYED / PLOTTED / GRADES CHECKED / M.A. ENTRY / STRUCTURE NOTATNS CHKD — NOTE BOOK NO. — CADD FILE NAME — BY — DATE

PROFILE — SURVEYED / PLOTTED / GRADES CHECKED / M.A. ENTRY / STRUCTURE NOTATNS CHKD — NOTE BOOK NO. — BY — DATE

LEGEND

- WORK AREA
- IMPACT ATTENUATORS, TEMPORARY (FULLY REDIRECTIVE, NARROW), TEST LEVEL 3
- TYPE III BARRICADE
- TEMPORARY CONCRETE BARRIER
- DRUM WITH STEADY BURN MONODIRECTIONAL LIGHT/
- DIRECTION INDICATOR BARRICADE WITH STEADY BURN MONODIRECTIONAL LIGHT
- SIGN

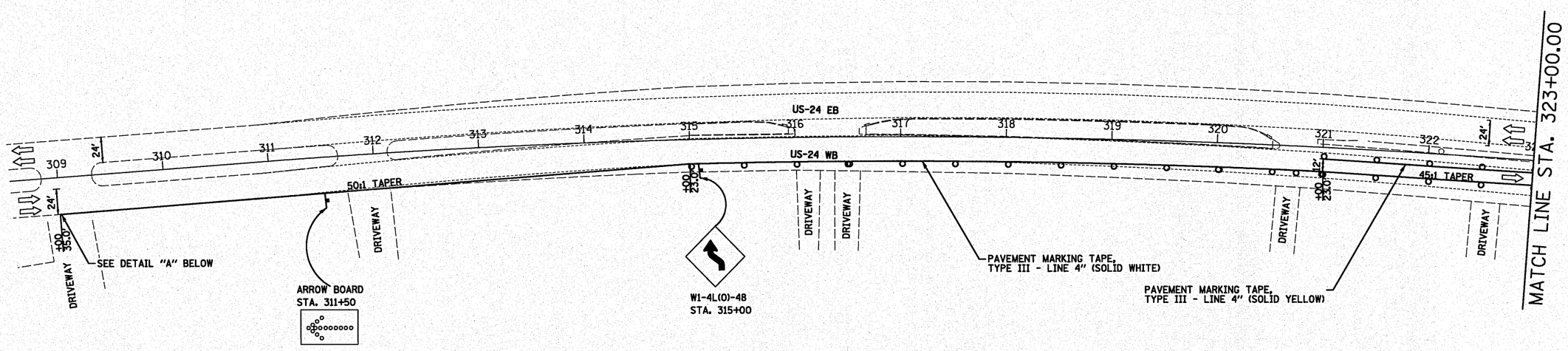

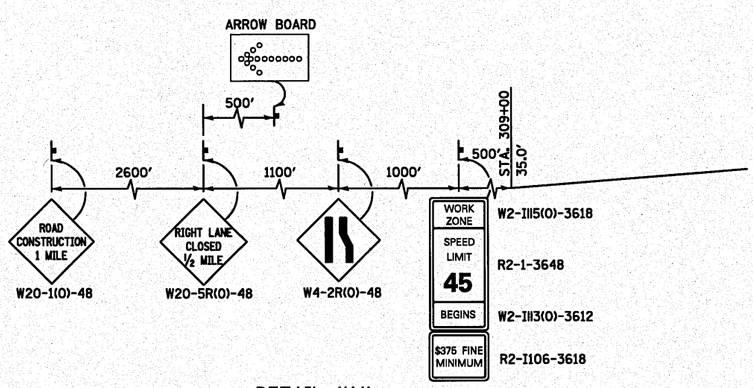

DETAIL "A"

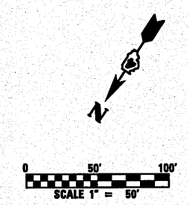

FILE NAME = ©FILE1©	USER NAME = ©USER©	DESIGNED - SEW	REVISED -
		DRAWN - SEW	REVISED -
	PLOT SCALE = ©SCALE©	CHECKED - FML	REVISED -
	PLOT DATE = ©DATE©	DATE - 10-15-2010	REVISED -

STATE OF ILLINOIS
DEPARTMENT OF TRANSPORTATION

MAINTENANCE OF TRAFFIC PLANS – STAGE 1
US ROUTE 24 OVER LAMARSH CREEK

SCALE: 1" = 50' | SHEET NO. 1 OF 4 SHEETS | STA. 309+00 TO STA. 323+00

F.A. RTE.	SECTION	COUNTY	TOTAL SHEETS	SHEET NO.
317	45BR-2	PEORIA	122	28
		CONTRACT NO. 68719		
		ILLINOIS FED. AID PROJECT		

LEGEND

- WORK AREA
- IMPACT ATTENUATORS, TEMPORARY (FULLY REDIRECTIVE, NARROW), TEST LEVEL 3
- TYPE III BARRICADE
- TEMPORARY CONCRETE BARRIER
- DRUM WITH STEADY BURN MONODIRECTIONAL LIGHT/
- DIRECTION INDICATOR BARRICADE WITH STEADY BURN MONODIRECTIONAL LIGHT
- SIGN

PRESTAGE CONSTRUCTION:

1. REMOVE EXISTING TYPE D GUARDRAIL IN THE MEDIAN ALONG US-24 AND PLACE TEMPORARY PAVEMENT FROM STA. 321+26.00 TO STA. 355+00.00.
2. REMOVE EXISTING CONCRETE MEDIAN ALONG US-24 AND PLACE TEMPORARY PAVEMENT FROM STA. 336+17.00 TO STA. 342+67.00.
3. REMOVE EXISTING SHOULDER RUMBLE STRIPS ALONG US-24 AND PLACE TEMPORARY PAVEMENT FROM:
   STA. 323+50 RT (INSIDE) TO STA. 331+50 RT (INSIDE)
   STA. 331+50 LT (INSIDE) TO STA. 335+15 LT (INSIDE)
   STA. 341+50 LT (INSIDE) TO STA. 349+00 LT (INSIDE)
   STA. 349+00 RT (INSIDE) TO STA. 356+40 RT (INSIDE)
   STA. 332+10 LT (OUTSIDE) TO STA. 344+30 LT (OUTSIDE)
4. CONSTRUCT TEMPORARY PAVEMENT ALONG CAMERON LANE SHOULDERS FROM STA. 11+67 LT TO STA. 14+22 LT AND STA. 10+55 RT TO STA. 15+30 RT.
5. THE ABOVE WORK ITEMS SHALL BE PERFORMED UNDER HIGHWAY STANDARD 701101 AND HIGHWAY STANDARD 701006, WITH FLAGGERS.

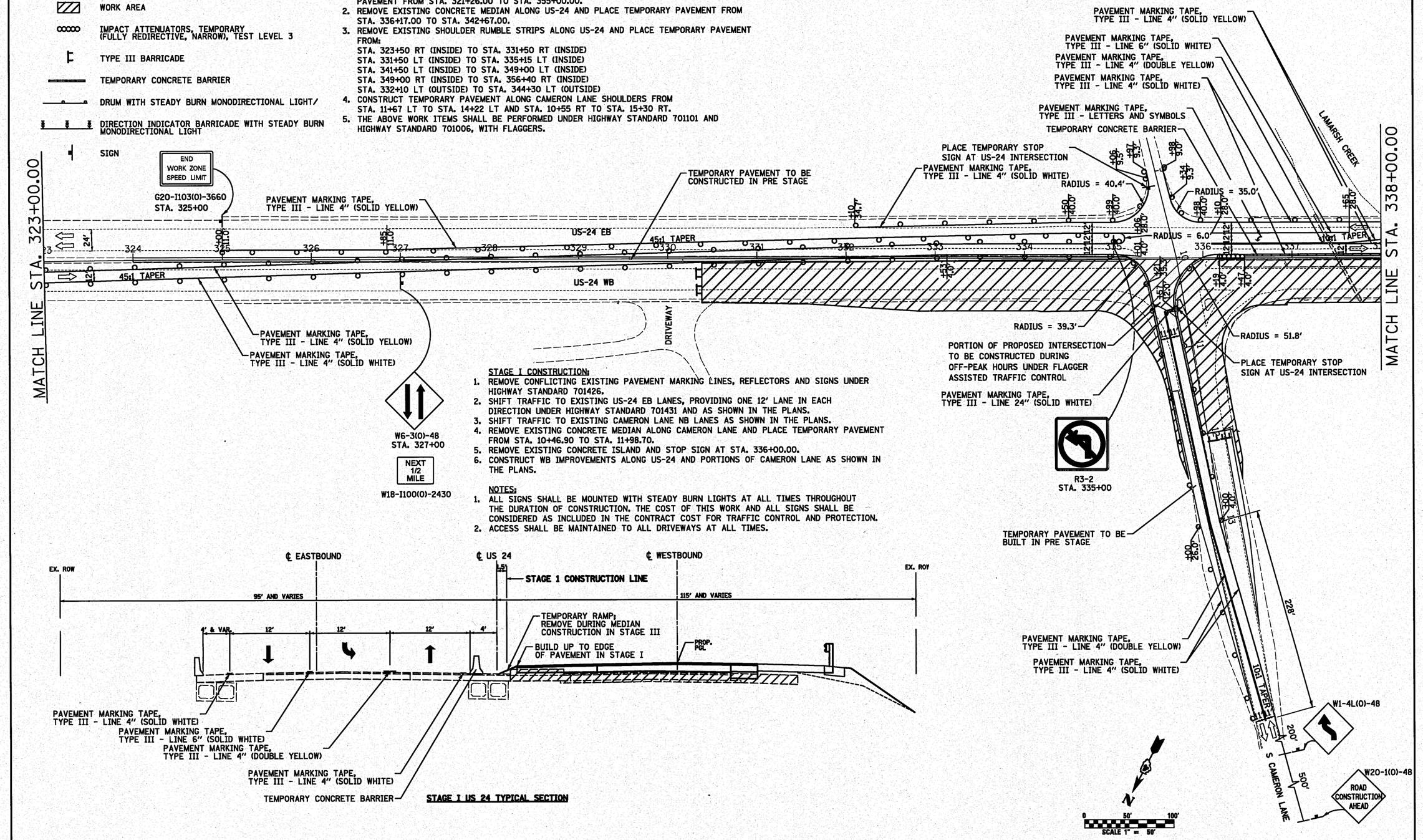

STAGE I CONSTRUCTION:

1. REMOVE CONFLICTING EXISTING PAVEMENT MARKING LINES, REFLECTORS AND SIGNS UNDER HIGHWAY STANDARD 701426.
2. SHIFT TRAFFIC TO EXISTING US-24 EB LANES, PROVIDING ONE 12' LANE IN EACH DIRECTION UNDER HIGHWAY STANDARD 701431 AND AS SHOWN IN THE PLANS.
3. SHIFT TRAFFIC TO EXISTING CAMERON LANE NB LANES AS SHOWN IN THE PLANS.
4. REMOVE EXISTING CONCRETE MEDIAN ALONG CAMERON LANE AND PLACE TEMPORARY PAVEMENT FROM STA. 10+46.90 TO STA. 11+98.70.
5. REMOVE EXISTING CONCRETE ISLAND AND STOP SIGN AT STA. 336+00.00.
6. CONSTRUCT WB IMPROVEMENTS ALONG US-24 AND PORTIONS OF CAMERON LANE AS SHOWN IN THE PLANS.

NOTES:

1. ALL SIGNS SHALL BE MOUNTED WITH STEADY BURN LIGHTS AT ALL TIMES THROUGHOUT THE DURATION OF CONSTRUCTION. THE COST OF THIS WORK AND ALL SIGNS SHALL BE CONSIDERED AS INCLUDED IN THE CONTRACT COST FOR TRAFFIC CONTROL AND PROTECTION.
2. ACCESS SHALL BE MAINTAINED TO ALL DRIVEWAYS AT ALL TIMES.

STAGE I US 24 TYPICAL SECTION

FILE NAME = ©FILEL©	USER NAME = ©USER©	DESIGNED - SEW	REVISED -	STATE OF ILLINOIS DEPARTMENT OF TRANSPORTATION	MAINTENANCE OF TRAFFIC PLANS – STAGE 1 US ROUTE 24 OVER LAMARSH CREEK	F.A. RTE.	SECTION	COUNTY	TOTAL SHEETS / SHEET NO.
		DRAWN - SEW	REVISED -			317	45BR-2	PEORIA	122 / 29
	PLOT SCALE = ©SCALE©	CHECKED - FML	REVISED -					CONTRACT NO. 68719	
	PLOT DATE = ©DATE©	DATE - 10-15-2010	REVISED -		SCALE: 1" = 50' / SHEET NO. 2 OF 4 SHEETS / STA. 323+00 TO STA. 338+00			ILLINOIS FED. AID PROJECT	

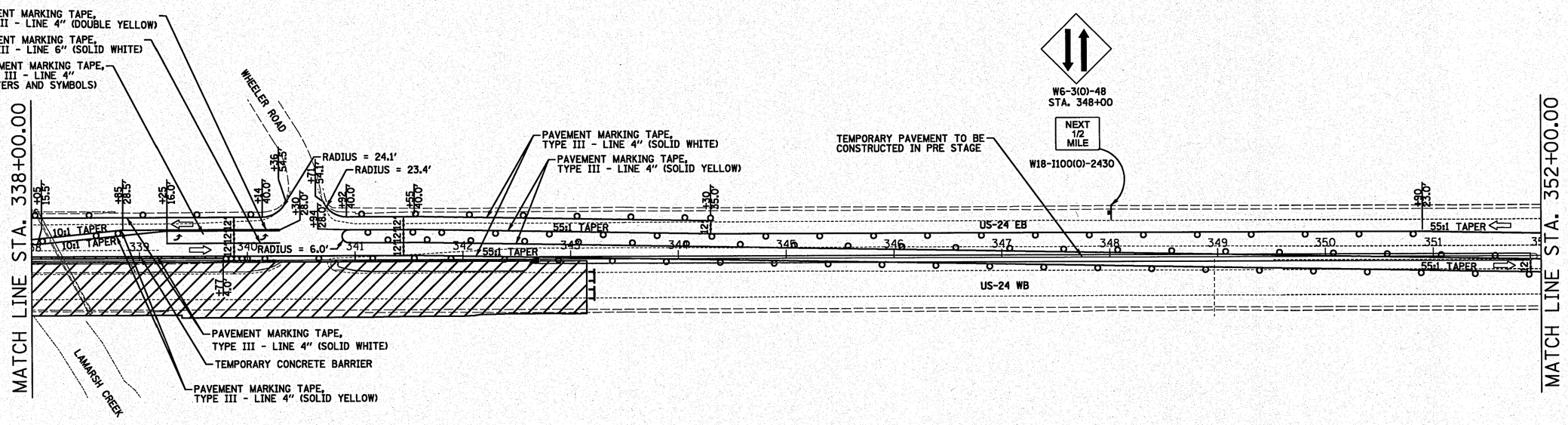

LEGEND

- WORK AREA
- IMPACT ATTENUATORS, TEMPORARY (FULLY REDIRECTIVE, NARROW), TEST LEVEL 3
- TYPE III BARRICADE
- TEMPORARY CONCRETE BARRIER
- DRUM WITH STEADY BURN MONODIRECTIONAL LIGHT/
- DIRECTION INDICATOR BARRICADE WITH STEADY BURN MONODIRECTIONAL LIGHT
- SIGN

N

0 50' 100'
SCALE 1" = 50'

FILE NAME = ©FILE©	USER NAME = ©USER©	DESIGNED - SEW	REVISED -	STATE OF ILLINOIS DEPARTMENT OF TRANSPORTATION	MAINTENANCE OF TRAFFIC PLANS – STAGE 1 US ROUTE 24 OVER LAMARSH CREEK	F.A. RTE.	SECTION	COUNTY	TOTAL SHEETS	SHEET NO.
		DRAWN - SEW	REVISED -			317	45BR-2	PEORIA	122	30
	PLOT SCALE = ©SCALE©	CHECKED - FML	REVISED -					CONTRACT NO. 68719		
	PLOT DATE = ©DATE©	DATE - 10-15-2010	REVISED -		SCALE: 1" = 50' / SHEET NO. 3 OF 4 SHEETS / STA. 338+00 TO STA. 352+00		ILLINOIS FED. AID PROJECT			

LEGEND

- WORK AREA
- IMPACT ATTENUATORS, TEMPORARY (FULLY REDIRECTIVE, NARROW), TEST LEVEL 3
- TYPE III BARRICADE
- TEMPORARY CONCRETE BARRIER
- DRUM WITH STEADY BURN MONODIRECTIONAL LIGHT/
- DIRECTION INDICATOR BARRICADE WITH STEADY BURN MONODIRECTIONAL LIGHT
- SIGN

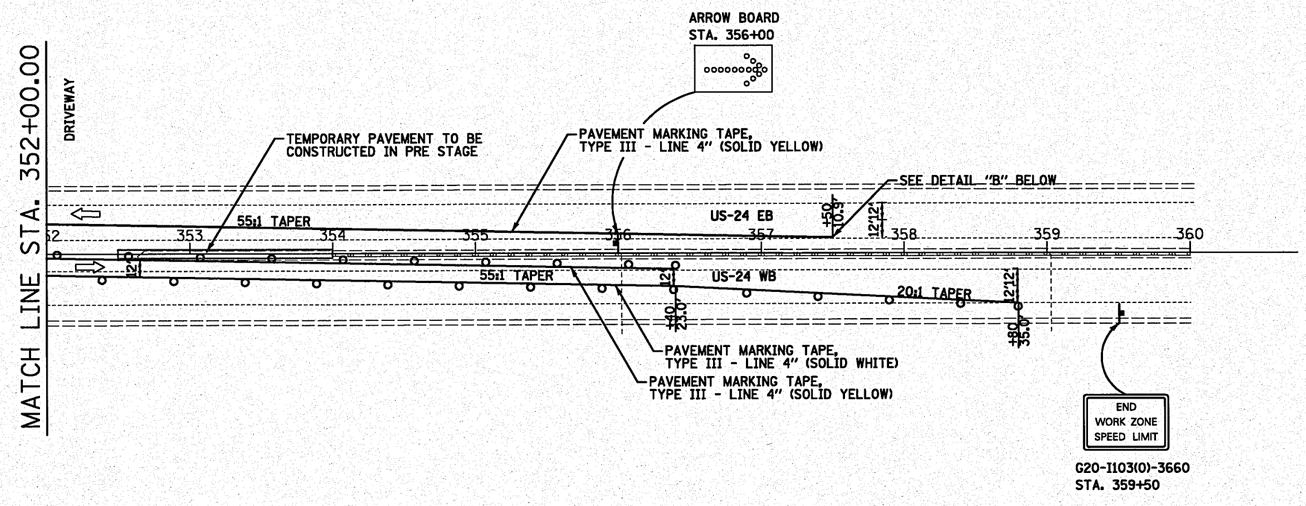

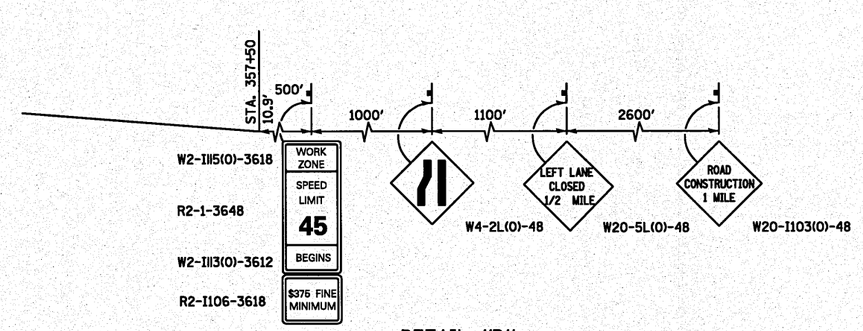

DETAIL "B"

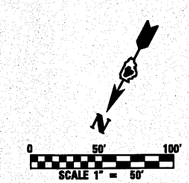

FILE NAME = ©FILEL©	USER NAME = ©USER©	DESIGNED - SEW	REVISED -
		DRAWN - SEW	REVISED -
	PLOT SCALE = ©SCALE©	CHECKED - FML	REVISED -
	PLOT DATE = ©DATE©	DATE - 10-15-2010	REVISED -

STATE OF ILLINOIS
DEPARTMENT OF TRANSPORTATION

MAINTENANCE OF TRAFFIC PLANS – STAGE 1
US ROUTE 24 OVER LAMARSH CREEK

SCALE: 1" = 50' | SHEET NO. 4 OF 4 SHEETS | STA. 352+00 TO STA. 360+50

F.A. RTE.	SECTION	COUNTY	TOTAL SHEETS	SHEET NO.
317	45BR-2	PEORIA	122	31
		CONTRACT NO. 68719		
		ILLINOIS FED. AID PROJECT		

LEGEND

- WORK AREA
- IMPACT ATTENUATORS, TEMPORARY (FULLY REDIRECTIVE, NARROW), TEST LEVEL 3
- TYPE III BARRICADE
- TEMPORARY CONCRETE BARRIER
- DRUM WITH STEADY BURN MONODIRECTIONAL LIGHT/
- DIRECTION INDICATOR BARRICADE WITH STEADY BURN MONODIRECTIONAL LIGHT
- SIGN

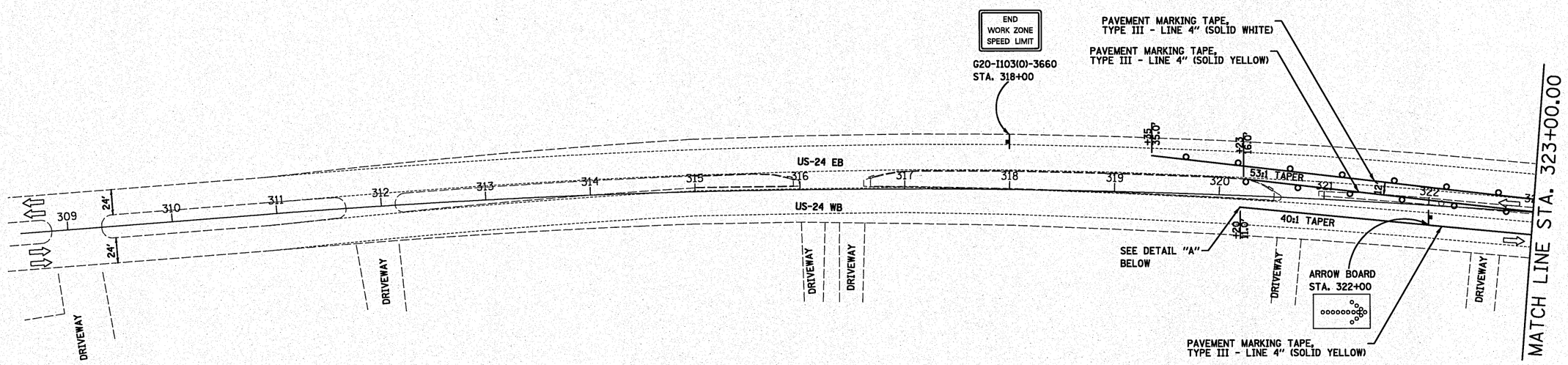

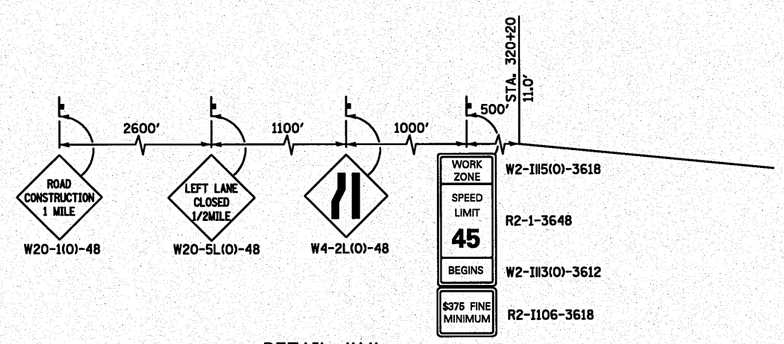

DETAIL "A"

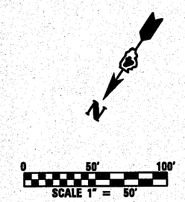

FILE NAME = ◆FILEL◆	USER NAME = ◆USER◆	DESIGNED - SEW	REVISED -	STATE OF ILLINOIS DEPARTMENT OF TRANSPORTATION	MAINTENANCE OF TRAFFIC PLANS – STAGE 2 US ROUTE 24 OVER LAMARSH CREEK	F.A. RTE.	SECTION	COUNTY	TOTAL SHEETS	SHEET NO.
		DRAWN - SEW	REVISED -			317	45BR-2	PEORIA	122	32
	PLOT SCALE = ◆SCALE◆	CHECKED - FML	REVISED -					CONTRACT NO. 68719		
	PLOT DATE = ◆DATE◆	DATE - 10-15-2010	REVISED -		SCALE: 1" = 50' / SHEET NO. 1 OF 5 SHEETS / STA. 309+00 TO STA. 323+00			ILLINOIS FED. AID PROJECT		

LEGEND

- WORK AREA
- IMPACT ATTENUATORS, TEMPORARY (FULLY REDIRECTIVE, NARROW), TEST LEVEL 3
- TYPE III BARRICADE
- TEMPORARY CONCRETE BARRIER
- DRUM WITH STEADY BURN MONODIRECTIONAL LIGHT/
- DIRECTION INDICATOR BARRICADE WITH STEADY BURN MONODIRECTIONAL LIGHT
- SIGN

STAGE II CONSTRUCTION:

1. REMOVE CONFLICTING EXISTING PAVEMENT MARKING LINES, REFLECTORS AND SIGNS UNDER HIGHWAY STANDARD 701426.
2. REMOVE "IMPACT ATTENUATORS, TEMPORARY (FULLY REDIRECTIVE), TEST LEVEL 3" AT STA. 321+26.00 UNDER HIGHWAY STANDARD 701101, WITH FLAGGERS.
3. SHIFT TRAFFIC TO EXISTING US-24 WB LANES, PROVIDING ONE 12' LANE IN EACH DIRECTION UNDER HIGHWAY STANDARD 701431 AND AS SHOWN IN THE PLANS.
4. SHIFT TRAFFIC TO EXISTING CAMERON LANE SB LANES AS SHOWN IN THE PLANS. CONSTRUCT PROPOSED IMPROVEMENTS ALONG US-24 EB, CAMERON LANE, AND WHEELER ROAD AS SHOWN IN THE PLANS. CONSTRUCT REMAINING PORTION OF US-24 & CAMERON LANE INTERSECTION USING FLAGGERS AT EACH LEG OF INTERSECTION.

STAGE III CONSTRUCTION:

1. CONSTRUCT PROPOSED TYPE D GUARDRAIL AND MEDIAN WITHIN THE PROJECT LIMITS AS SHOWN ON THE PLANS UNDER HIGHWAY STANDARD 701602-05, WITH FLAGGERS. CLOSE LEFT THROUGH LANE IN WB DIRECTION AND LEFT TURN LANES IN BOTH DIRECTIONS.
2. INSTALL THE TYPE D GUARDRAIL AND IMPACT ATTENUATORS REMOVED DURING THE PRE-STAGE CONSTRUCTION WHICH IS OUTSIDE OF THE LIMITS OF RECONSTRUCTION UNDER HIGHWAY STANDARD 701101, WITH FLAGGERS.
3. CONSTRUCT PROPOSED SHOULDER RUMBLE STRIPS ALONG US-24 AS SHOWN IN PLANS UNDER HIGHWAY STANDARD 701101, WITH FLAGGERS.
4. PLACE PROPOSED PAVEMENT MARKINGS PER PLAN UNDER HIGHWAY STANDARD 701426.

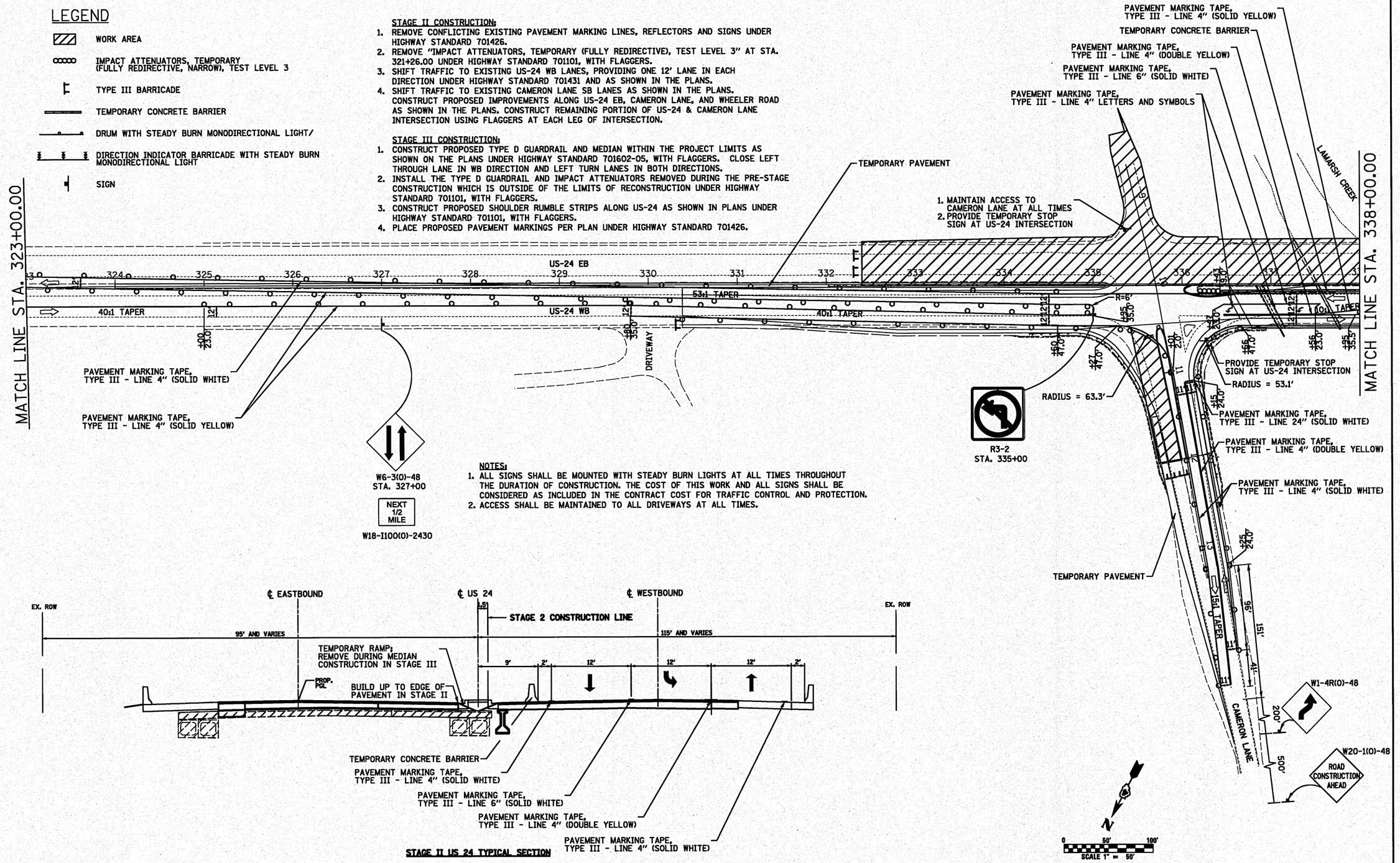

NOTES:

1. ALL SIGNS SHALL BE MOUNTED WITH STEADY BURN LIGHTS AT ALL TIMES THROUGHOUT THE DURATION OF CONSTRUCTION. THE COST OF THIS WORK AND ALL SIGNS SHALL BE CONSIDERED AS INCLUDED IN THE CONTRACT COST FOR TRAFFIC CONTROL AND PROTECTION.
2. ACCESS SHALL BE MAINTAINED TO ALL DRIVEWAYS AT ALL TIMES.

STAGE II US 24 TYPICAL SECTION

FILE NAME = ©FILE©	USER NAME = ©USER©	DESIGNED - SEW	REVISED -	STATE OF ILLINOIS DEPARTMENT OF TRANSPORTATION	MAINTENANCE OF TRAFFIC PLANS – STAGE 2 US ROUTE 24 OVER LAMARSH CREEK
		DRAWN - SEW	REVISED -		
	PLOT SCALE = ©SCALE©	CHECKED - FML	REVISED -		
	PLOT DATE = ©DATE©	DATE - 10-15-2010	REVISED -		SCALE: 1" = 50' · SHEET NO. 2 OF 5 SHEETS · STA. 323+00 TO STA. 338+00

F.A. RTE.	SECTION	COUNTY	TOTAL SHEETS	SHEET NO.
317	45BR-2	PEORIA	122	33
		CONTRACT NO. 68719		
		ILLINOIS FED. AID PROJECT		

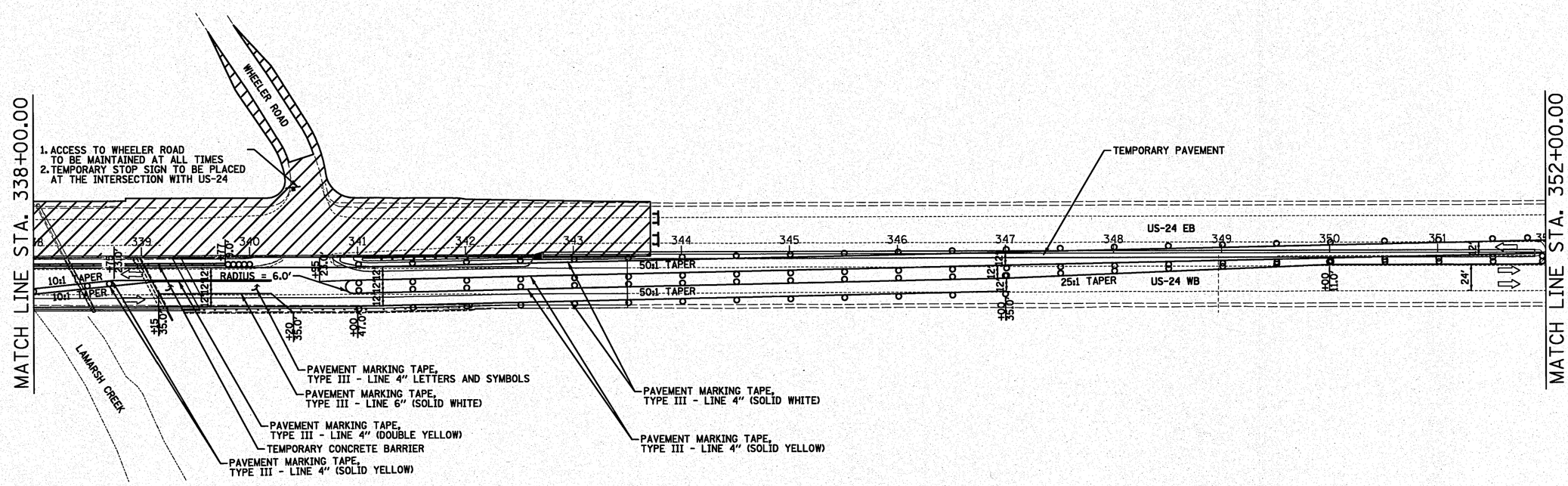

LEGEND

- WORK AREA
- IMPACT ATTENUATORS, TEMPORARY (FULLY REDIRECTIVE, NARROW), TEST LEVEL 3
- TYPE III BARRICADE
- TEMPORARY CONCRETE BARRIER
- DRUM WITH STEADY BURN MONODIRECTIONAL LIGHT/
- DIRECTION INDICATOR BARRICADE WITH STEADY BURN MONODIRECTIONAL LIGHT
- SIGN

N

0 50' 100'
SCALE 1" = 50'

FILE NAME = ◆FILEL◆	USER NAME = ◆USER◆	DESIGNED - SEW	REVISED -	STATE OF ILLINOIS DEPARTMENT OF TRANSPORTATION	MAINTENANCE OF TRAFFIC PLANS – STAGE 2 US ROUTE 24 OVER LAMARSH CREEK	F.A. RTE.	SECTION	COUNTY	TOTAL SHEETS	SHEET NO.
		DRAWN - SEW	REVISED -			317	45BR-2	PEORIA	122	34
	PLOT SCALE = ◆SCALE◆	CHECKED - FML	REVISED -					CONTRACT NO. 68719		
	PLOT DATE = ◆DATE◆	DATE - 10-15-2010	REVISED -		SCALE: 1" = 50' / SHEET NO. 3 OF 5 SHEETS / STA. 338+00 TO STA. 352+00		ILLINOIS FED. AID PROJECT			

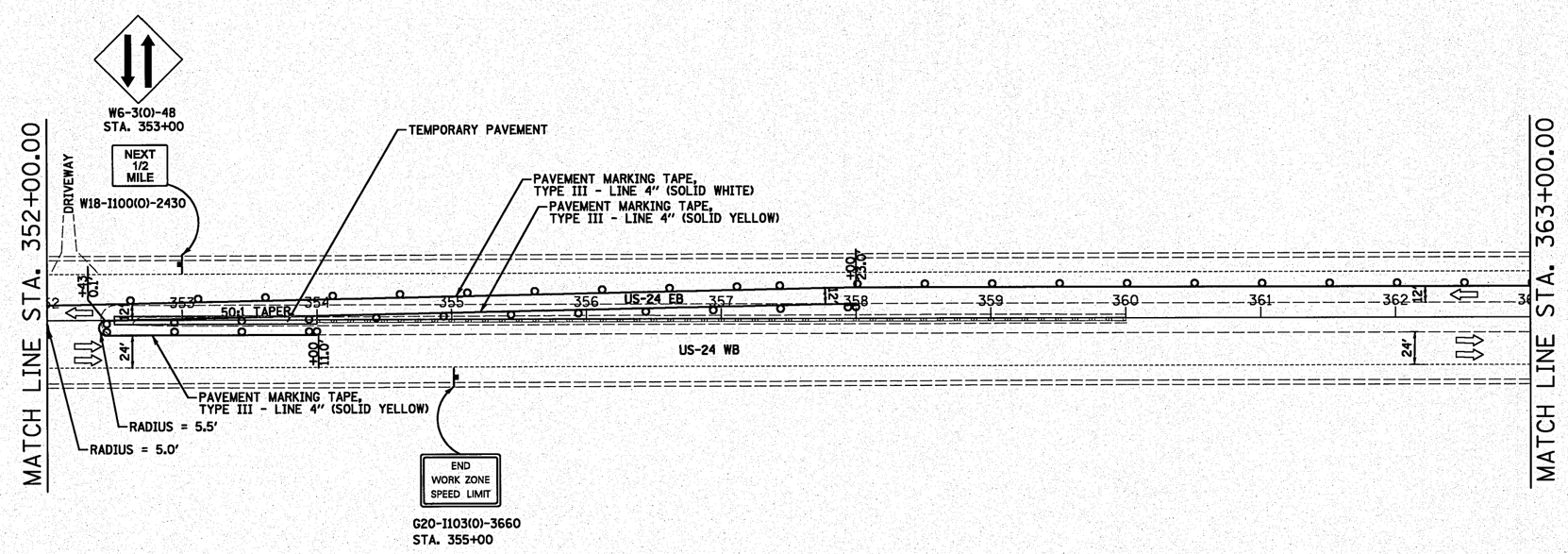

LEGEND

- WORK AREA
- IMPACT ATTENUATORS, TEMPORARY (FULLY REDIRECTIVE, NARROW), TEST LEVEL 3
- TYPE III BARRICADE
- TEMPORARY CONCRETE BARRIER
- DRUM WITH STEADY BURN MONODIRECTIONAL LIGHT/
- DIRECTION INDICATOR BARRICADE WITH STEADY BURN MONODIRECTIONAL LIGHT
- SIGN

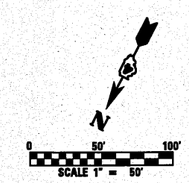

FILE NAME = ◆FILEL◆	USER NAME = ◆USER◆	DESIGNED - SEW	REVISED -	STATE OF ILLINOIS DEPARTMENT OF TRANSPORTATION	MAINTENANCE OF TRAFFIC PLANS – STAGE 2 US ROUTE 24 OVER LAMARSH CREEK	F.A. RTE.	SECTION	COUNTY	TOTAL SHEETS	SHEET NO.
		DRAWN - SEW	REVISED -			317	45BR-2	PEORIA	122	35
	PLOT SCALE = ◆SCALE◆	CHECKED - FML	REVISED -					CONTRACT NO. 68719		
	PLOT DATE = ◆DATE◆	DATE - 10-15-2010	REVISED -		SCALE: 1" = 50' / SHEET NO. 4 OF 5 SHEETS / STA. 352+00 TO STA. 363+00			ILLINOIS FED. AID PROJECT		

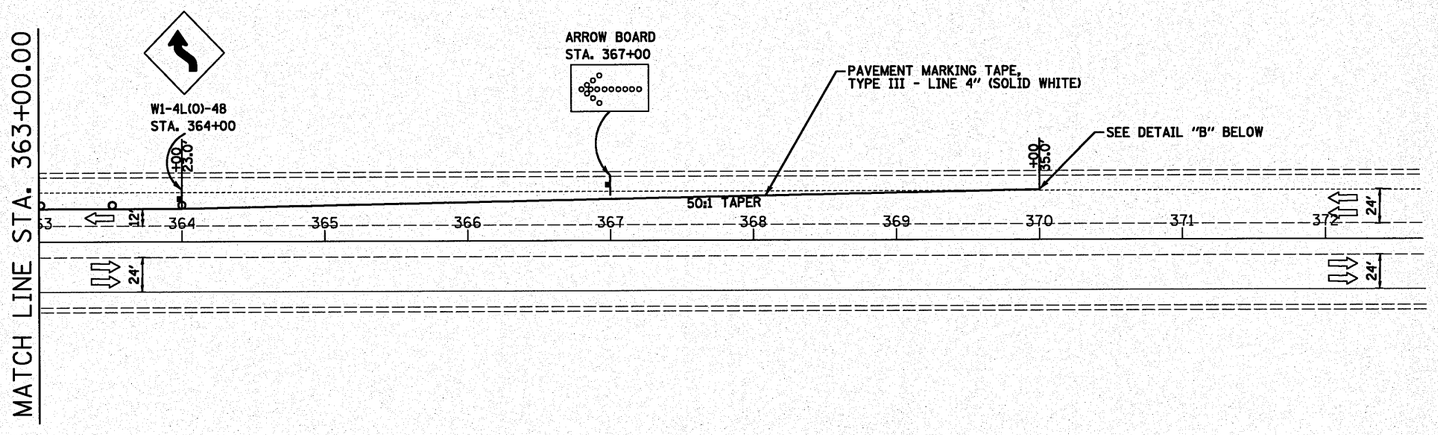

LEGEND

- WORK AREA
- IMPACT ATTENUATORS, TEMPORARY (FULLY REDIRECTIVE, NARROW), TEST LEVEL 3
- TYPE III BARRICADE
- TEMPORARY CONCRETE BARRIER
- DRUM WITH STEADY BURN MONODIRECTIONAL LIGHT/
- DIRECTION INDICATOR BARRICADE WITH STEADY BURN MONODIRECTIONAL LIGHT
- SIGN

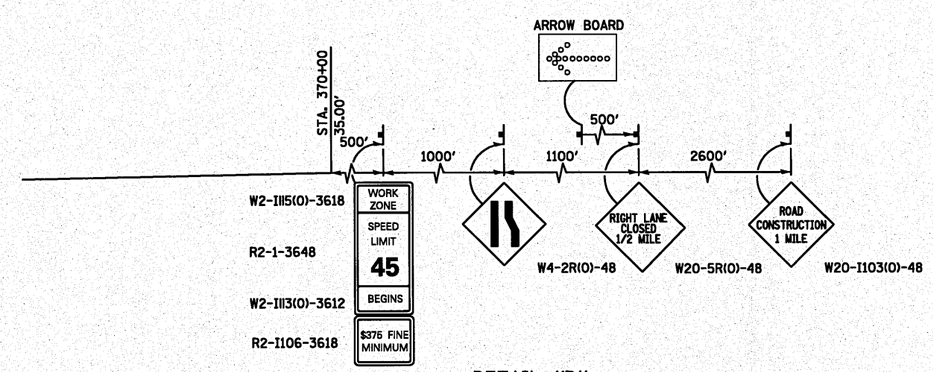

DETAIL "B"

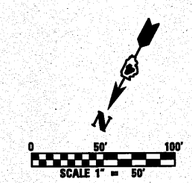

FILE NAME = ◆FILEL◆	USER NAME = ◆USER◆	DESIGNED - SEW	REVISED -	STATE OF ILLINOIS DEPARTMENT OF TRANSPORTATION	MAINTENANCE OF TRAFFIC PLANS – STAGE 2
		DRAWN - SEW	REVISED -		US ROUTE 24 OVER LAMARSH CREEK
	PLOT SCALE = ◆SCALE◆	CHECKED - FML	REVISED -		
	PLOT DATE = ◆DATE◆	DATE - 10-15-2010	REVISED -		SCALE: 1" = 50' · SHEET NO. 5 OF 5 SHEETS · STA. 363+00 TO STA. 372+50

F.A. RTE.	SECTION	COUNTY	TOTAL SHEETS	SHEET NO.
317	45BR-2	PEORIA	122	36
		CONTRACT NO. 68719		
		ILLINOIS FED. AID PROJECT		

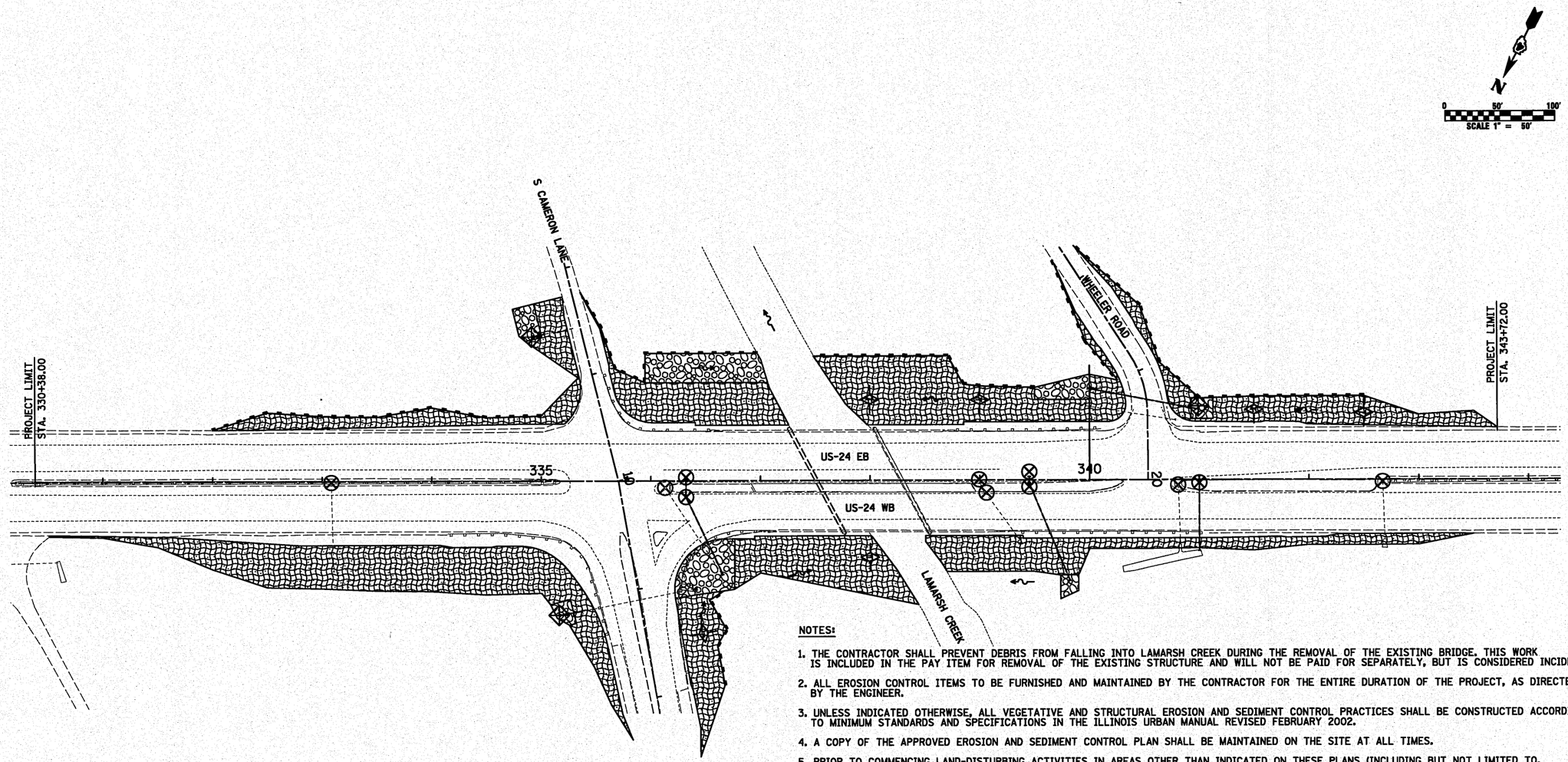

NOTES:

1. THE CONTRACTOR SHALL PREVENT DEBRIS FROM FALLING INTO LAMARSH CREEK DURING THE REMOVAL OF THE EXISTING BRIDGE. THIS WORK IS INCLUDED IN THE PAY ITEM FOR REMOVAL OF THE EXISTING STRUCTURE AND WILL NOT BE PAID FOR SEPARATELY, BUT IS CONSIDERED INCIDENTAL.
2. ALL EROSION CONTROL ITEMS TO BE FURNISHED AND MAINTAINED BY THE CONTRACTOR FOR THE ENTIRE DURATION OF THE PROJECT, AS DIRECTED BY THE ENGINEER.
3. UNLESS INDICATED OTHERWISE, ALL VEGETATIVE AND STRUCTURAL EROSION AND SEDIMENT CONTROL PRACTICES SHALL BE CONSTRUCTED ACCORDING TO MINIMUM STANDARDS AND SPECIFICATIONS IN THE ILLINOIS URBAN MANUAL REVISED FEBRUARY 2002.
4. A COPY OF THE APPROVED EROSION AND SEDIMENT CONTROL PLAN SHALL BE MAINTAINED ON THE SITE AT ALL TIMES.
5. PRIOR TO COMMENCING LAND-DISTURBING ACTIVITIES IN AREAS OTHER THAN INDICATED ON THESE PLANS (INCLUDING BUT NOT LIMITED TO, ADDITIONAL PHASES OF DEVELOPMENT AND OFF-SITE BORROW OR WASTE AREAS) A SUPPLEMENTARY EROSION CONTROL PLAN SHALL BE SUBMITTED TO THE DEPARTMENT FOR REVIEW.
6. ALL ADJACENT STREETS MUST BE KEPT CLEAR OF DEBRIS. INSPECTED DAILY AND CLEANED WHEN NECESSARY.
7. ALL EROSION CONTROL MEASURES MUST BE INSPECTED WEEKLY AND AFTER EACH 1/2" RAIN EVENT.
8. EROSION CONTROL BLANKET SHALL BE INSTALLED ON ALL SLOPES AND IN CRITICAL AREAS IMMEDIATELY UPON FINAL GRADING.
9. THE PRIORITY SHALL BE GIVEN TO THE COMPLETION AND STABILIZATION OF THE DISTRURBED AREAS. WORK IN THESE AREAS SHALL NOT BE PROLONGED IN ATTEMPT THAT ALL FINAL GRADING AND STABILIZATION CAN TAKE PLACE AT ONE TIME.
10. STOCKPILES OF SOIL AND OTHER MATERIALS TO REMAIL IN PLACE MORE THAN THREE (3) DAYS SHALL BE FURNISHED WITH EROSION AND SEDIMENT CONTROL MEASURES (I.E. PERIMETER SILT FENCE). STOCKPILES TO REMAIN IN PLACE FOR 21 DAYS OR MORE SHALL RECEIVE TEMPORARY SEEDING.
11. IN AREAS WHERE WORK IS COMPLETE, PERMANENT STABILIZATION SHALL OCCUR WITHIN 7 DAYS OR COMPLETION, AND IN AREAS WHERE WORK HAS TEMPORARILY CEASED FOR 21 DAYS OR MORE, TEMPORARY STABILIZATION SHALL OCCUR BY THE 14TH DAY AFTER WORK HAS CEASED.
12. COMPLETED SLOPES SHALL BE SEEDED AND BLANKETED AS THE EXCAVATION PROCEEDS TO THE EXTENT CONSIDERED DESIRABLE AND PRACTICAL. UNDER NO CIRCUMSTANCES SHALL THE CONTRACTOR PROLONG FINAL GRADING AND SHAPING SO THAT THE ENTIRE PROJECT CAN BE PERMANENTLY SEEDED AT ONE TIME.
13. NO WORK SHALL BE PERFORMED IN FLOWING WATER. WORK IN AND NEAR THE CRITICAL AREAS SHOULD BE ISOLATED FROM CONCENTRATED FLOWS OR STREAM FLOW. THE STREAM BANKS SHOULD BE STABILIZED AT THE END OF EACH DAY. ONCE WORK IN THIS AREA BEGINS, PRIORITY SHALL BE GIVEN TO THE COMPLETION OF THE WORK AND FINAL STABILIZATION OF ALL DISTURBED AREAS.
14. THE SIDES SLOPE AND DITCHES MUST BE SEEDED AND STABILIZED WITH AN APPROPRIATE EROSION CONTROL BLANKET PRIOR TO ACCEPTING FLOWS.

LEGEND

- INLET & PIPE PROTECTION
- INLET FILTERS
- PERIMETER EROSION BARRIER
- EROSION CONTROL BLANKET & SEEDING CLASS 2A
- STONE RIPRAP, CLASS A4 W/ FILTER FABRIC
- TEMPORARY DITCH CHECK
- PROPOSED DITCH FLOW

FILE NAME = ©FILEL©	USER NAME = ©USER©	DESIGNED - SEW	REVISED -	STATE OF ILLINOIS DEPARTMENT OF TRANSPORTATION	EROSION AND SEDIMENT CONTROL PLAN US ROUTE 24 OVER LAMARSH CREEK	F.A. RTE.	SECTION	COUNTY	TOTAL SHEETS	SHEET NO.
		DRAWN - SEW	REVISED -			317	45BR-2	PEORIA	122	37
	PLOT SCALE = ©SCALE©	CHECKED - FML	REVISED -					CONTRACT NO. 68719		
	PLOT DATE = ©DATE©	DATE - 10-15-2010	REVISED -		SCALE: 1" = 50' / SHEET NO. 1 OF 1 SHEETS / STA. 330+38 TO STA. 343+72			ILLINOIS FED. AID PROJECT		

PROPOSED DRAINAGE IMPROVEMENTS

STRUCT NUMBER	STATION	OFFSET	EXIST. RIM ELEV.	PROP. RIM ELEV.	INVERT ELEV.	PROPOSED TREATMENT
1	333+08.42	1.1' RT	461.76	461.94	UNKNOWN	FRAMES AND LIDS TO BE ADJUSTED

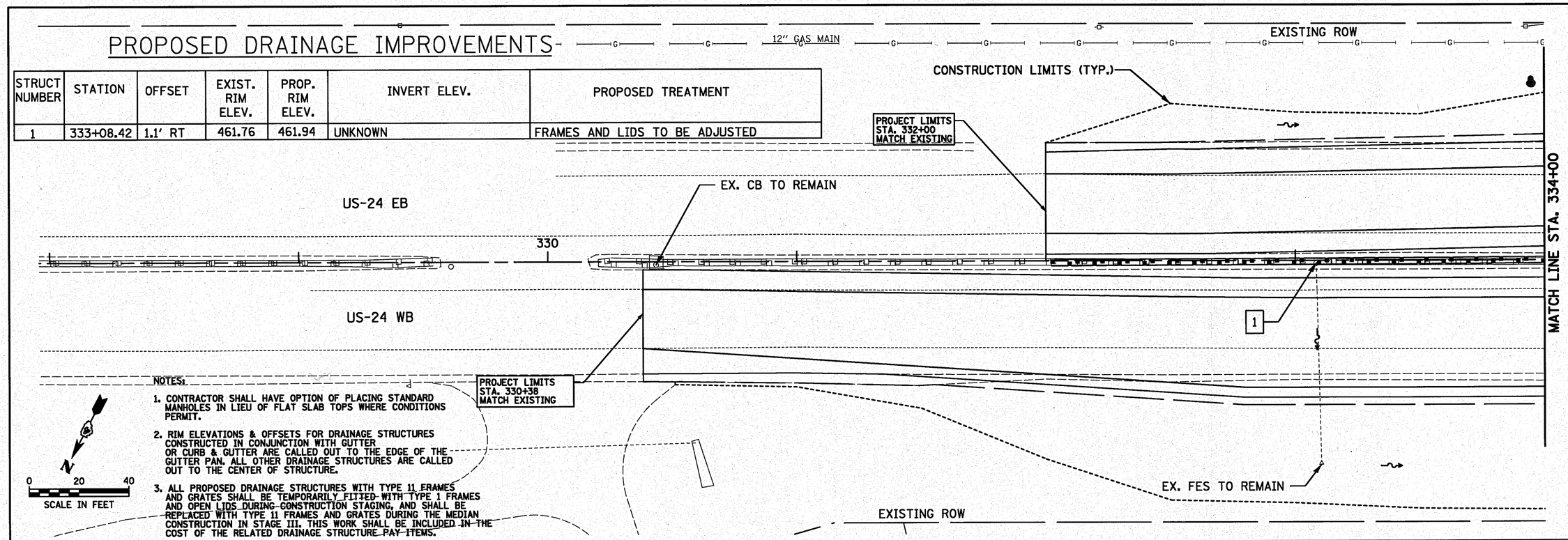

NOTES:

1. CONTRACTOR SHALL HAVE OPTION OF PLACING STANDARD MANHOLES IN LIEU OF FLAT SLAB TOPS WHERE CONDITIONS PERMIT.
2. RIM ELEVATIONS & OFFSETS FOR DRAINAGE STRUCTURES CONSTRUCTED IN CONJUNCTION WITH GUTTER OR CURB & GUTTER ARE CALLED OUT TO THE EDGE OF THE GUTTER PAN. ALL OTHER DRAINAGE STRUCTURES ARE CALLED OUT TO THE CENTER OF STRUCTURE.
3. ALL PROPOSED DRAINAGE STRUCTURES WITH TYPE 11 FRAMES AND GRATES SHALL BE TEMPORARILY FITTED WITH TYPE 1 FRAMES AND OPEN LIDS DURING CONSTRUCTION STAGING, AND SHALL BE REPLACED WITH TYPE 11 FRAMES AND GRATES DURING THE MEDIAN CONSTRUCTION IN STAGE III. THIS WORK SHALL BE INCLUDED IN THE COST OF THE RELATED DRAINAGE STRUCTURE PAY ITEMS.

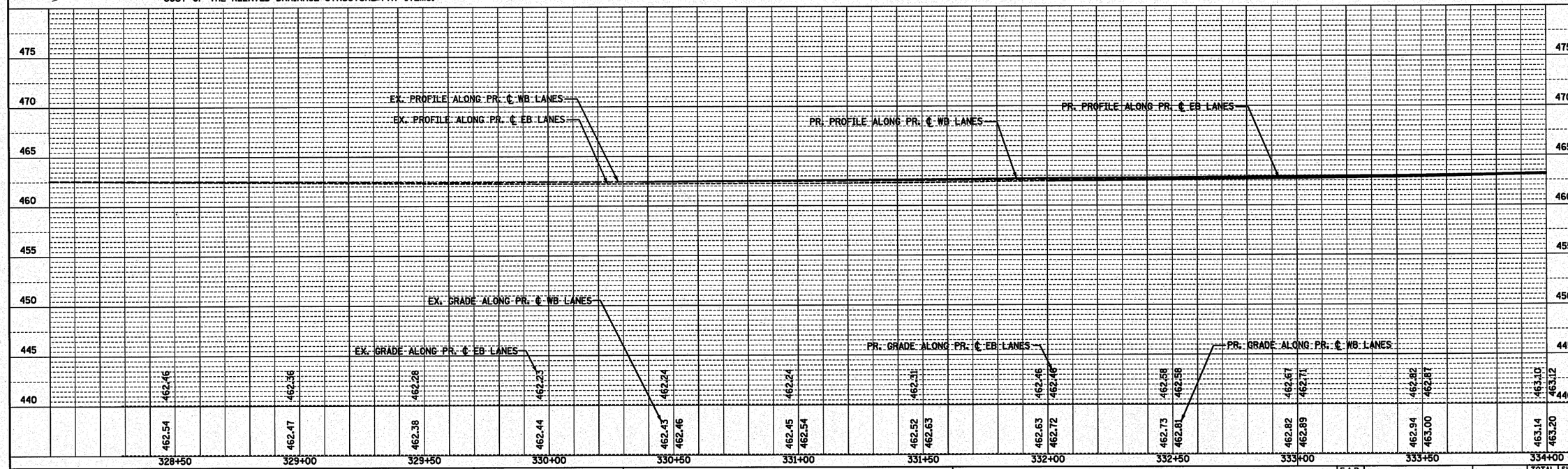

PROFILE — SURVEYED / PLOTTED / ALIGNMENT CHECKED / STRUCTURE NOTATIONS CHKD — NOTE BOOK NO. ____ — BY — DATE

PLAN — SURVEYED / PLOTTED / R.O.W. CHECKED / CADD FILE NAME — NOTE BOOK NO. ____ — BY — DATE

FILE NAME = ©FILE1©	USER NAME = ©USER©	DESIGNED SEW	REVISED -
		DRAWN SEW	REVISED -
	PLOT SCALE = ©SCALE©	CHECKED FML	REVISED -
	PLOT DATE = ©DATE©	DATE 10-15-2010	REVISED -

STATE OF ILLINOIS
DEPARTMENT OF TRANSPORTATION

PROPOSED DRAINAGE PLAN AND PROFILE
US ROUTE 24 OVER LAMARSH CREEK

SCALE: 1" = 20' | SHEET NO. 1 OF 3 SHEETS | STA. 328+00 TO STA. 334+00

F.A.P. RTE.	SECTION	COUNTY	TOTAL SHEETS	SHEET NO.
317	45BR-2	PEORIA	122	38
		CONTRACT NO. 68719		

FED. ROAD DIST. NO. | ILLINOIS | FED. AID PROJECT

PROPOSED DRAINAGE IMPROVEMENTS

STRUCT NUMBER	STATION	OFFSET	EXIST. RIM ELEV.	PROP. RIM ELEV.	INVERT ELEV.	PROPOSED TREATMENT
5	336+65.29	85.2' RT	-	-	449.68	END SECTIONS, 18"
6	336+32.00	15.0' RT	-	464.94	460.44 S, 451.97 N	CB TY. A, 4' DIA., TYPE 11 FRAME, OPEN LID
7	336+32.00	3.0' LT	-	464.70	460.53 N	INL TY. A, TYPE 11 FRAME AND GRATE
8	339+45.00	3.0' LT	-	467.74	463.66 N	INL TY. A, TYPE 11 FRAME AND GRATE
9	339+45.00	3.0' RT	-	467.74	463.63 S, 453.04 N	CB TY. A, 4' DIA., TYPE 11 FRAME, OPEN LID
10	339+73.00	91.8' RT	-	-	450.86	END SECTIONS, 18"
11	340+00.00	82.9' LT	-	-	461.00	24" PRC FLARED END SECTION W/ GRATING

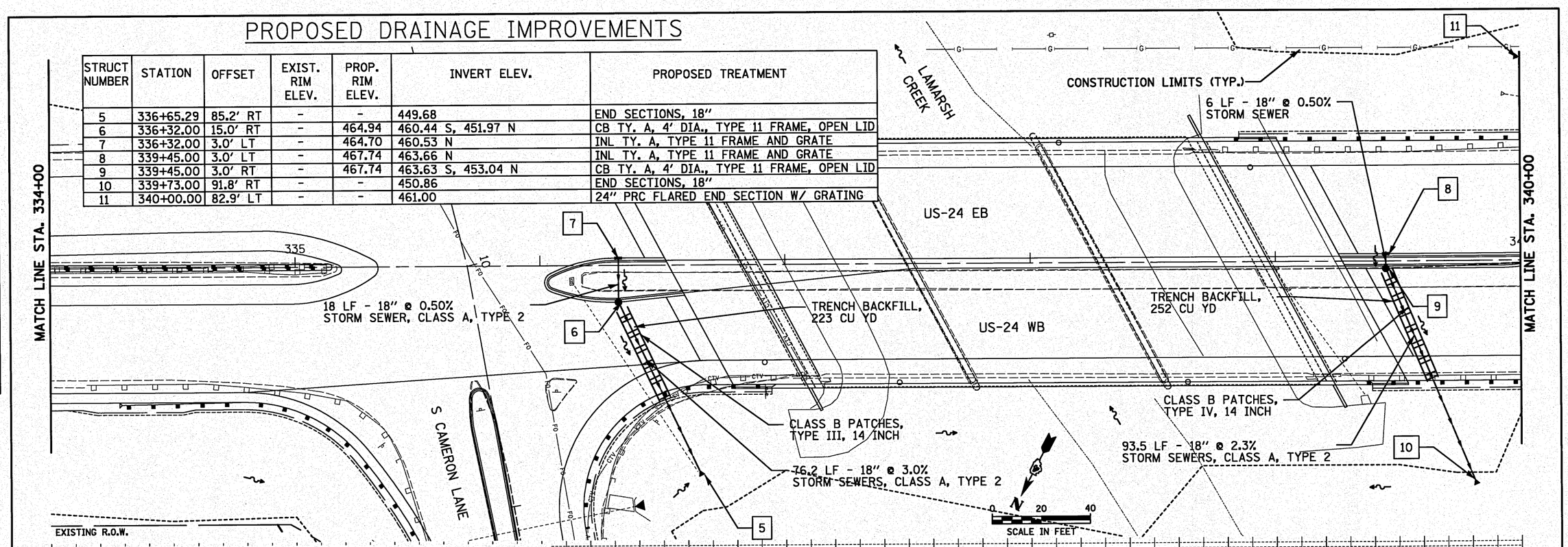

NOTES:

1. CONTRACTOR SHALL HAVE OPTION OF PLACING STANDARD MANHOLES IN LIEU OF FLAT SLAB TOPS WHERE CONDITIONS PERMIT.
2. RIM ELEVATIONS & OFFSETS FOR DRAINAGE STRUCTURES CONSTRUCTED IN CONJUNCTION WITH GUTTER OR CURB & GUTTER ARE CALLED OUT TO THE EDGE OF THE GUTTER PAN. ALL OTHER DRAINAGE STRUCTURES ARE CALLED OUT TO THE CENTER OF STRUCTURE.
3. ALL PROPOSED DRAINAGE STRUCTURES WITH TYPE 11 FRAMES AND GRATES SHALL BE TEMPORARILY FITTED WITH TYPE 1 FRAMES AND OPEN LIDS DURING CONSTRUCTION STAGING, AND SHALL BE REPLACED WITH TYPE 11 FRAMES AND GRATES DURING THE MEDIAN CONSTRUCTION IN STAGE III. THIS WORK SHALL BE INCLUDED IN THE COST OF THE RELATED DRAINAGE STRUCTURE PAY ITEMS.

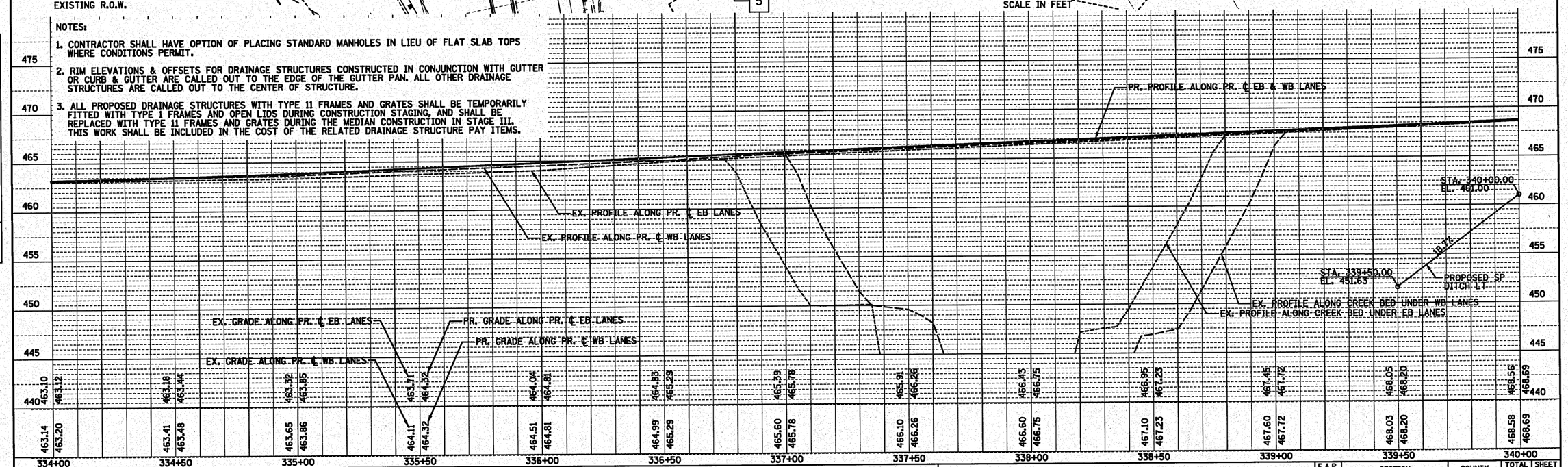

FILE NAME = ©FILEL©	USER NAME = ©USER©	DESIGNED SEW	REVISED -
		DRAWN SEW	REVISED -
	PLOT SCALE = ©SCALE©	CHECKED FML	REVISED -
	PLOT DATE = ©DATE©	DATE 10-15-2010	REVISED -

STATE OF ILLINOIS
DEPARTMENT OF TRANSPORTATION

PROPOSED DRAINAGE PLAN AND PROFILE
US ROUTE 24 OVER LAMARSH CREEK

SCALE: 1" = 20' | SHEET NO. 2 OF 3 SHEETS | STA. 334+00 TO STA. 340+00

F.A.P. RTE.	SECTION	COUNTY	TOTAL SHEETS	SHEET NO.
317	45BR-2	PEORIA	122	39
		CONTRACT NO. 68719		

FED. ROAD DIST. NO. | ILLINOIS | FED. AID PROJECT

PLAN — SURVEYED / PLOTTED / ALIGNMENT CHECKED / GRADES CHECKED / STRUCTURE LOCATIONS CHKD / NOTE BOOK NO. / QUAD FILE NAME / BY / DATE

PROFILE — SURVEYED / PLOTTED / ALIGNMENT CHECKED / GRADES CHECKED / STRUCTURE LOCATIONS CHKD / NOTE BOOK NO. / BY / DATE

PROPOSED DRAINAGE IMPROVEMENTS

STRUCT NUMBER	STATION	OFFSET	EXIST. RIM ELEV.	PROP. RIM ELEV.	INVERT ELEV.	PROPOSED TREATMENT
12	341+00.00	64.2' LT	-	-	466.00	24" PRC FLARED END SECTION W/ GRATING
13	341+00.00	3.0' RT	-	469.07	463.56 N	CB TY. A, 4' DIA., TYPE 11 FRAME, OPEN LID
14	341+00.00	64.2' RT	-	-	463.00	END SECTIONS, 18"
15	342+67.11	2.1' RT	470.07	470.60	UNKNOWN	FRAMES AND LIDS TO BE ADJUSTED

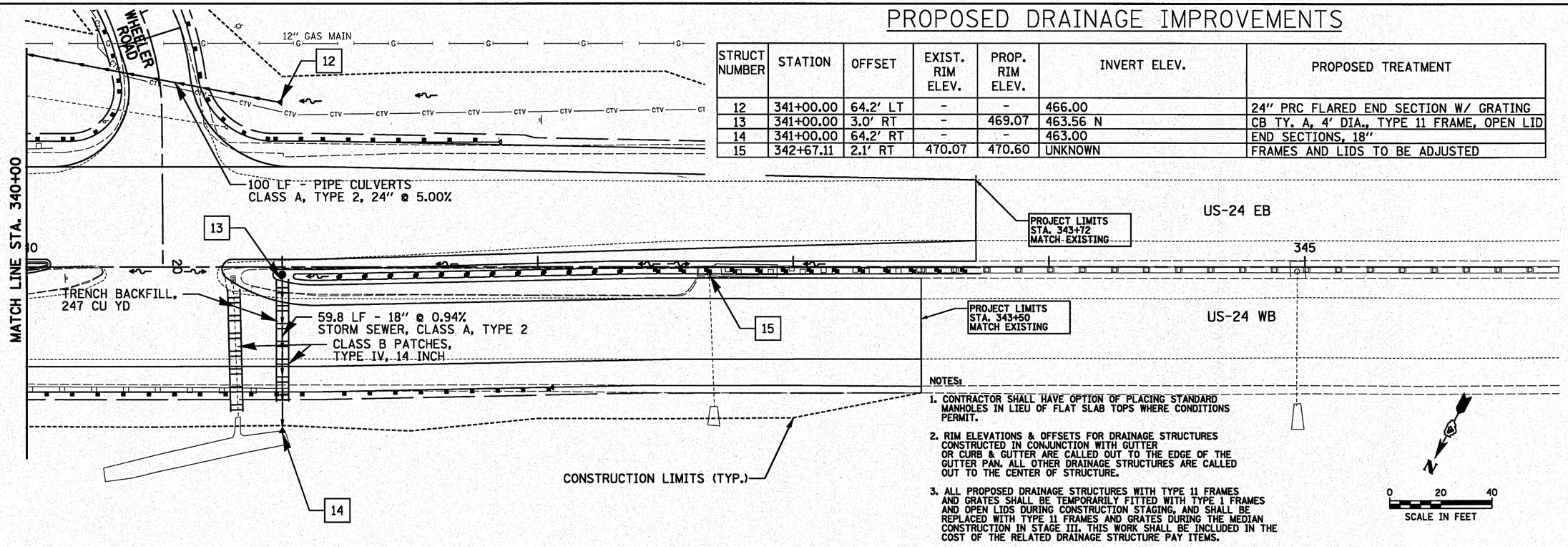

NOTES:

1. CONTRACTOR SHALL HAVE OPTION OF PLACING STANDARD MANHOLES IN LIEU OF FLAT SLAB TOPS WHERE CONDITIONS PERMIT.
2. RIM ELEVATIONS & OFFSETS FOR DRAINAGE STRUCTURES CONSTRUCTED IN CONJUNCTION WITH GUTTER OR CURB & GUTTER ARE CALLED OUT TO THE EDGE OF THE GUTTER PAN. ALL OTHER DRAINAGE STRUCTURES ARE CALLED OUT TO THE CENTER OF STRUCTURE.
3. ALL PROPOSED DRAINAGE STRUCTURES WITH TYPE 11 FRAMES AND GRATES SHALL BE TEMPORARILY FITTED WITH TYPE 1 FRAMES AND OPEN LIDS DURING CONSTRUCTION STAGING, AND SHALL BE REPLACED WITH TYPE 11 FRAMES AND GRATES DURING THE MEDIAN CONSTRUCTION IN STAGE III. THIS WORK SHALL BE INCLUDED IN THE COST OF THE RELATED DRAINAGE STRUCTURE PAY ITEMS.

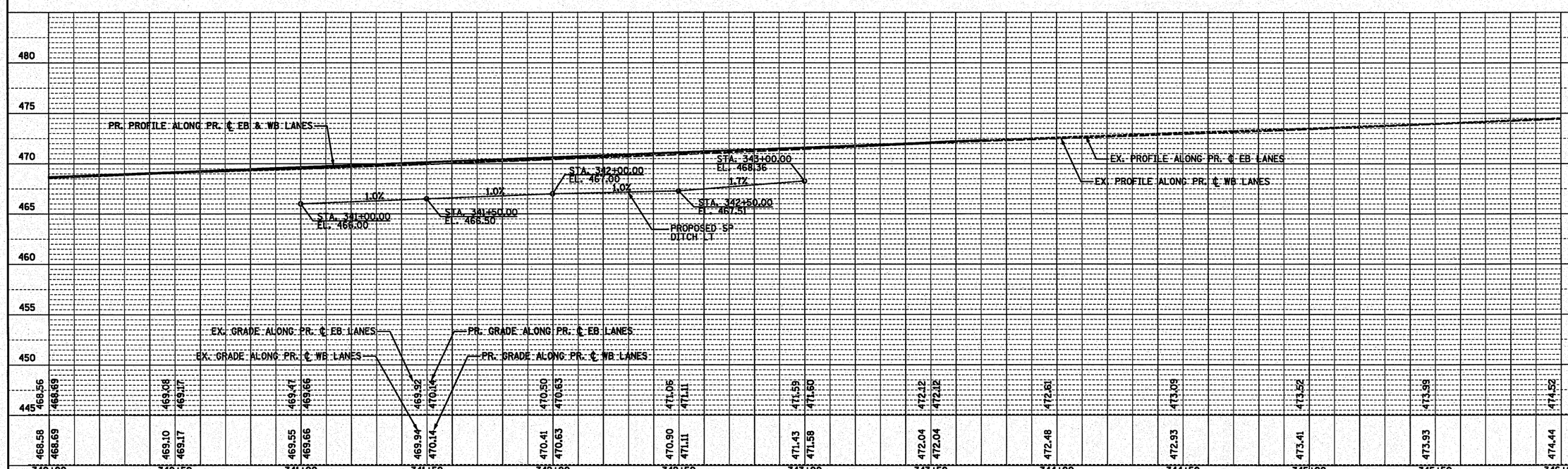

PLAN: SURVEYED / PLOTTED / ALIGNMENT CHECKED / R.L. OF RAY CHECKED / CADD FILE NAME / NOTE BOOK NO. / BY / DATE

PROFILE: SURVEYED / PLOTTED / GRADE CHECKED / BALANCED / STRUCTURE NOTAYNS CHKD / NOTE BOOK NO. / BY / DATE

FILE NAME = ©FILE1©	USER NAME = ©USER©	DESIGNED SEW	REVISED -	STATE OF ILLINOIS DEPARTMENT OF TRANSPORTATION	PROPOSED DRAINAGE PLAN AND PROFILE US ROUTE 24 OVER LAMARSH CREEK
		DRAWN SEW	REVISED -		
	PLOT SCALE = ©SCALE©	CHECKED FML	REVISED -		
	PLOT DATE = ©DATE©	DATE 10-15-2010	REVISED -		SCALE: 1" = 20' · SHEET NO. 3 OF 3 SHEETS · STA. 340+00 TO STA. 346+00

F.A.P. RTE.	SECTION	COUNTY	TOTAL SHEETS	SHEET NO.
317	45BR-2	PEORIA	122	40
		CONTRACT NO. 68719		
FED. ROAD DIST. NO.	ILLINOIS	FED. AID PROJECT		

PROPOSED DRAINAGE IMPROVEMENTS

STRUCT NUMBER	STATION	OFFSET	EXIST. RIM ELEV.	PROP. RIM ELEV.	INVERT ELEV.	PROPOSED TREATMENT
2	11+11.00	73.7' RT	-	-	EXTENSION ALONG EXISTING SLOPE	36" PRC FLARED END SECTION W/ GRATING
3	11+8.77	50.0' LT	-	-	MATCH EXISTING INVERT	36" RC-END SECTION STD. 542101
4	8+53.92	43.7' RT	-	-	448.50	30" PRC FLARED END SECTION W/ GRATING

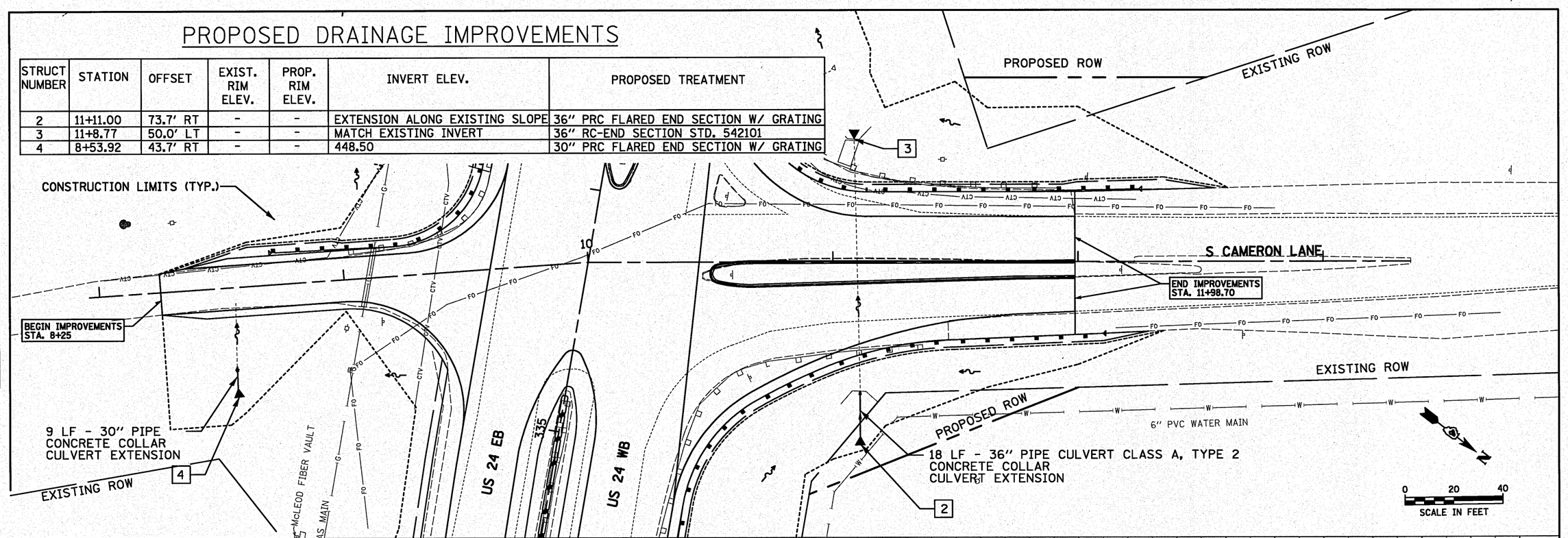

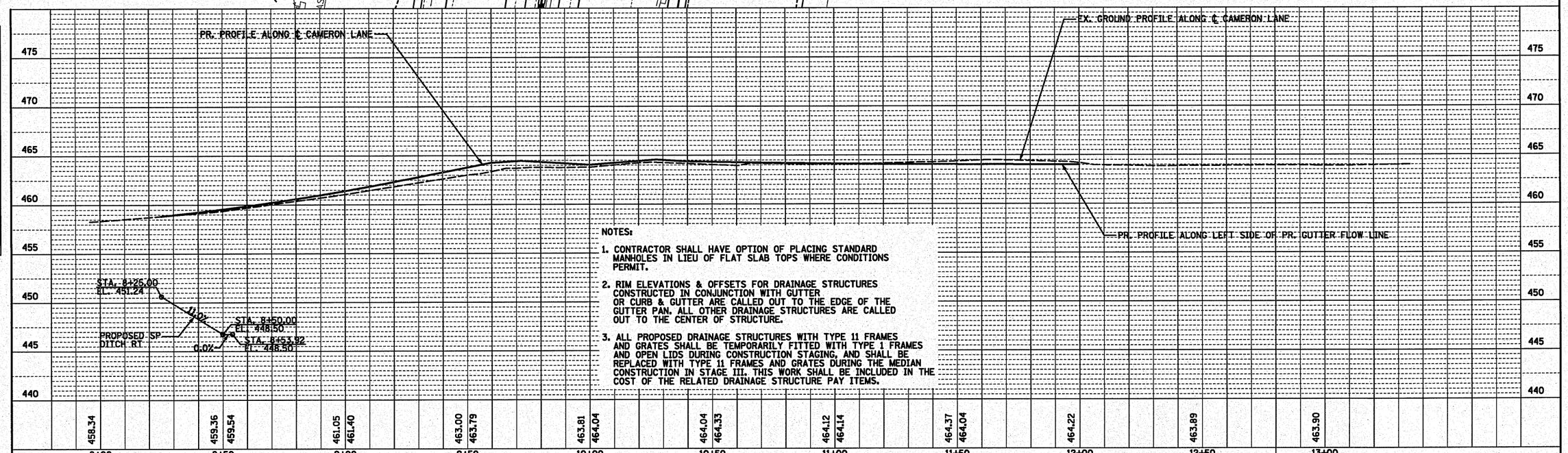

NOTES:

1. CONTRACTOR SHALL HAVE OPTION OF PLACING STANDARD MANHOLES IN LIEU OF FLAT SLAB TOPS WHERE CONDITIONS PERMIT.
2. RIM ELEVATIONS & OFFSETS FOR DRAINAGE STRUCTURES CONSTRUCTED IN CONJUNCTION WITH GUTTER OR CURB & GUTTER ARE CALLED OUT TO THE EDGE OF THE GUTTER PAN. ALL OTHER DRAINAGE STRUCTURES ARE CALLED OUT TO THE CENTER OF STRUCTURE.
3. ALL PROPOSED DRAINAGE STRUCTURES WITH TYPE 11 FRAMES AND GRATES SHALL BE TEMPORARILY FITTED WITH TYPE 1 FRAMES AND OPEN LIDS DURING CONSTRUCTION STAGING, AND SHALL BE REPLACED WITH TYPE 11 FRAMES AND GRATES DURING THE MEDIAN CONSTRUCTION IN STAGE III. THIS WORK SHALL BE INCLUDED IN THE COST OF THE RELATED DRAINAGE STRUCTURE PAY ITEMS.

PLAN: SURVEYED / PLOTTED / DRAWN / CHECKED / NOTE BOOK NO. / CADD FILE NAME / BY / DATE

PROFILE: SURVEYED / PLOTTED / DRAWN / CHECKED / NOTE BOOK NO. / STRUCTURE #01A1PRS CHKD / BY / DATE

FILE NAME = ©FILE©	USER NAME = ©USER©	DESIGNED SEW	REVISED -
		DRAWN SEW	REVISED -
	PLOT SCALE = ©SCALE©	CHECKED FML	REVISED -
	PLOT DATE = ©DATE©	DATE 10-15-2010	REVISED -

STATE OF ILLINOIS
DEPARTMENT OF TRANSPORTATION

PROPOSED DRAINAGE PLAN AND PROFILE
S CAMERON LANE

SCALE: 1" = 20' | SHEET NO. 1 OF 1 SHEETS | STA. 7+95.88 TO STA. 13+35.75

F.A.P. RTE.	SECTION	COUNTY	TOTAL SHEETS	SHEET NO.
317	45BR-2	PEORIA	122	41
		CONTRACT NO. 68719		

FED. ROAD DIST. NO. | ILLINOIS | FED. AID PROJECT

CONTRACT: 68719 CATALOG: 033511

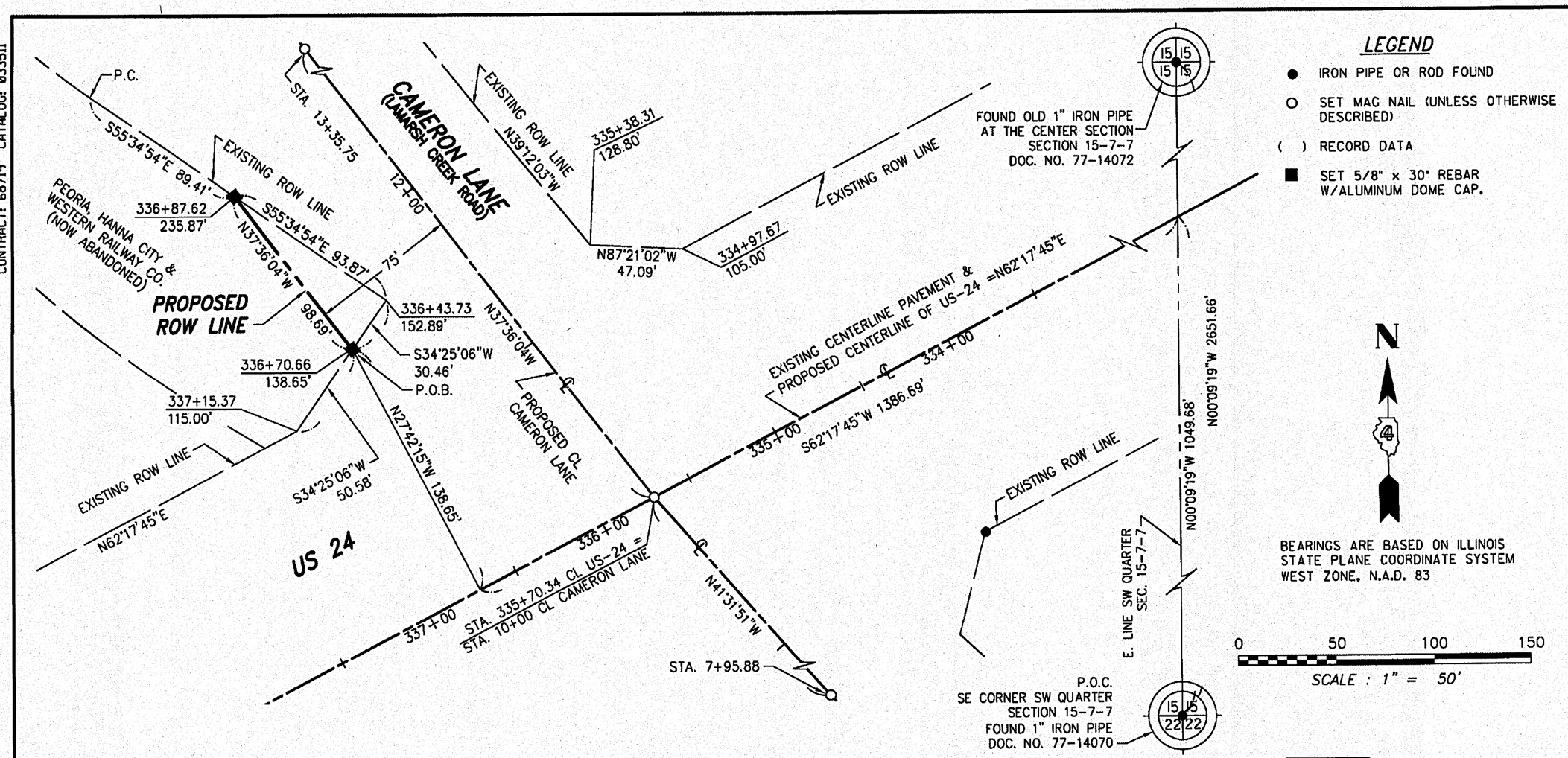

LEGEND

- ● IRON PIPE OR ROD FOUND
- ○ SET MAG NAIL (UNLESS OTHERWISE DESCRIBED)
- ( ) RECORD DATA
- ■ SET 5/8" x 30" REBAR W/ALUMINUM DOME CAP.

4AKA001

PEORIA, HANNA CITY AND WESTERN RAILWAY CO.
(OR ITS SUCCESSOR)

AREA=1,430 SQUARE FEET±, OR 0.033 ACRES±

A PART OF THE SW 1/4 SECTION 15, TOWNSHIP 7 NORTH, RANGE 7 EAST OF THE 4th PRINCIPAL MERIDIAN, PEORIA COUNTY, ILLINOIS.

RIGHT OF WAY PLAT

F.A.P. 317 US-24, SECTION 45BR-2, JOB NO. R-94-009-09
PEORIA COUNTY SCALE: 1" = 50'

POSTED Final 4-14-10

THIS IS TO CERTIFY THAT THIS IS A TRUE AND CORRECT PLAT OF A SURVEY MADE UNDER MY DIRECTION FOR THE DIVISION OF HIGHWAYS, STATE OF ILLINOIS.

DAVID A. CLAASSEN
ILLINOIS PROFESSIONAL LAND SURVEYOR NO. 2962
LICENSE EXPIRES NOVEMBER 30, 2010

DAVID A. CLAASSEN 2962 PROFESSIONAL LAND SURVEYOR STATE OF ILLINOIS JOLIET, IL

SIGNED: RECORDED: DOCUMENT NO.: BOOK: PAGE: 4AKA001

FILE NAME = $FILEL$	USER NAME = $USER$	DESIGNED -	REVISED -	STATE OF ILLINOIS DEPARTMENT OF TRANSPORTATION	U.S. 24 /IL 9- OVER LAMARSH CREEK RIGHT-OF-WAY PLAT	F.A.P. RTE.	SECTION	COUNTY	TOTAL SHEETS	SHEET NO.
		DRAWN -	REVISED -			317	45BR-2	PEORIA	122	42
	PLOT SCALE = 100.0000 ' / IN.	CHECKED -	REVISED -					CONTRACT NO. 68719		
	PLOT DATE = 10/18/2010	DATE - 10-15-2010	REVISED -		SCALE: NTS / SHEET NO. 1 OF 2 SHEETS / STA. TO STA.			ILLINOIS FED. AID PROJECT		

CONTRACT: 68719 CATALOG: 033511

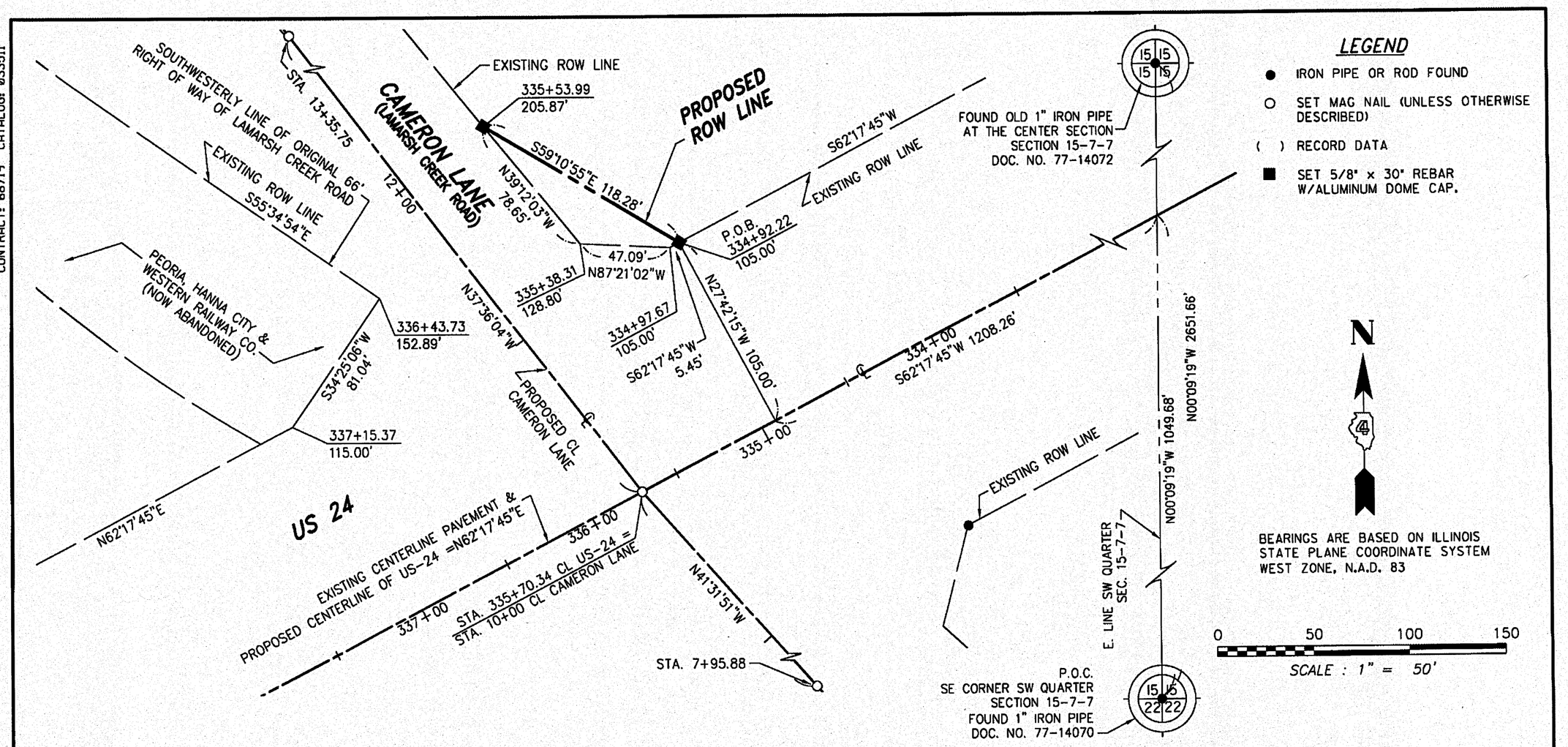

LEGEND

- ● IRON PIPE OR ROD FOUND
- ○ SET MAG NAIL (UNLESS OTHERWISE DESCRIBED)
- ( ) RECORD DATA
- ■ SET 5/8" x 30" REBAR W/ALUMINUM DOME CAP.

POSTED Final 4-14-10

THIS IS TO CERTIFY THAT THIS IS A TRUE AND CORRECT PLAT OF A SURVEY MADE UNDER MY DIRECTION FOR THE DIVISION OF HIGHWAYS, STATE OF ILLINOIS.

DAVID A. CLAASSEN
ILLINOIS PROFESSIONAL LAND SURVEYOR NO. 2962
LICENSE EXPIRES NOVEMBER 30, 2010

DAVID A. CLAASSEN 2962 PROFESSIONAL LAND SURVEYOR STATE OF ILLINOIS JOLIET, IL

(4AKA002)

FRED E. ROWELL AND JACQUELINE L. ROWELL,

AREA=1,654 SQUARE FEET±, OR 0.038 ACRES±

A PART OF THE SW 1/4 SECTION 15, TOWNSHIP 7 NORTH, RANGE 7 EAST OF THE 4th PRINCIPAL MERIDIAN, PEORIA COUNTY, ILLINOIS.

RIGHT OF WAY PLAT

F.A.P. 317 US-24, SECTION 45BR-2, JOB. NO. R-94-009-09, PEORIA COUNTY
SCALE: 1" = 50'

SIGNED: RECORDED: DOCUMENT NO.: BOOK: PAGE: (4AKA002)

FILE NAME = @FILEL@	USER NAME = .USER.	DESIGNED -	REVISED -	STATE OF ILLINOIS DEPARTMENT OF TRANSPORTATION	U.S. 24 /IL 9- OVER LAMARSH CREEK RIGHT-OF-WAY PLAT	F.A.P. RTE.	SECTION	COUNTY	TOTAL SHEETS	SHEET NO.
		DRAWN -	REVISED -			317	45BR-2	PEORIA	122	43
	PLOT SCALE = 100.0000 ' / IN.	CHECKED -	REVISED -			CONTRACT NO. 68719				
	PLOT DATE = 10/18/2010	DATE - 10-15-2010	REVISED -		SCALE: NTS / SHEET NO. 2 OF 2 SHEETS / STA. / TO STA.	ILLINOIS FED. AID PROJECT				

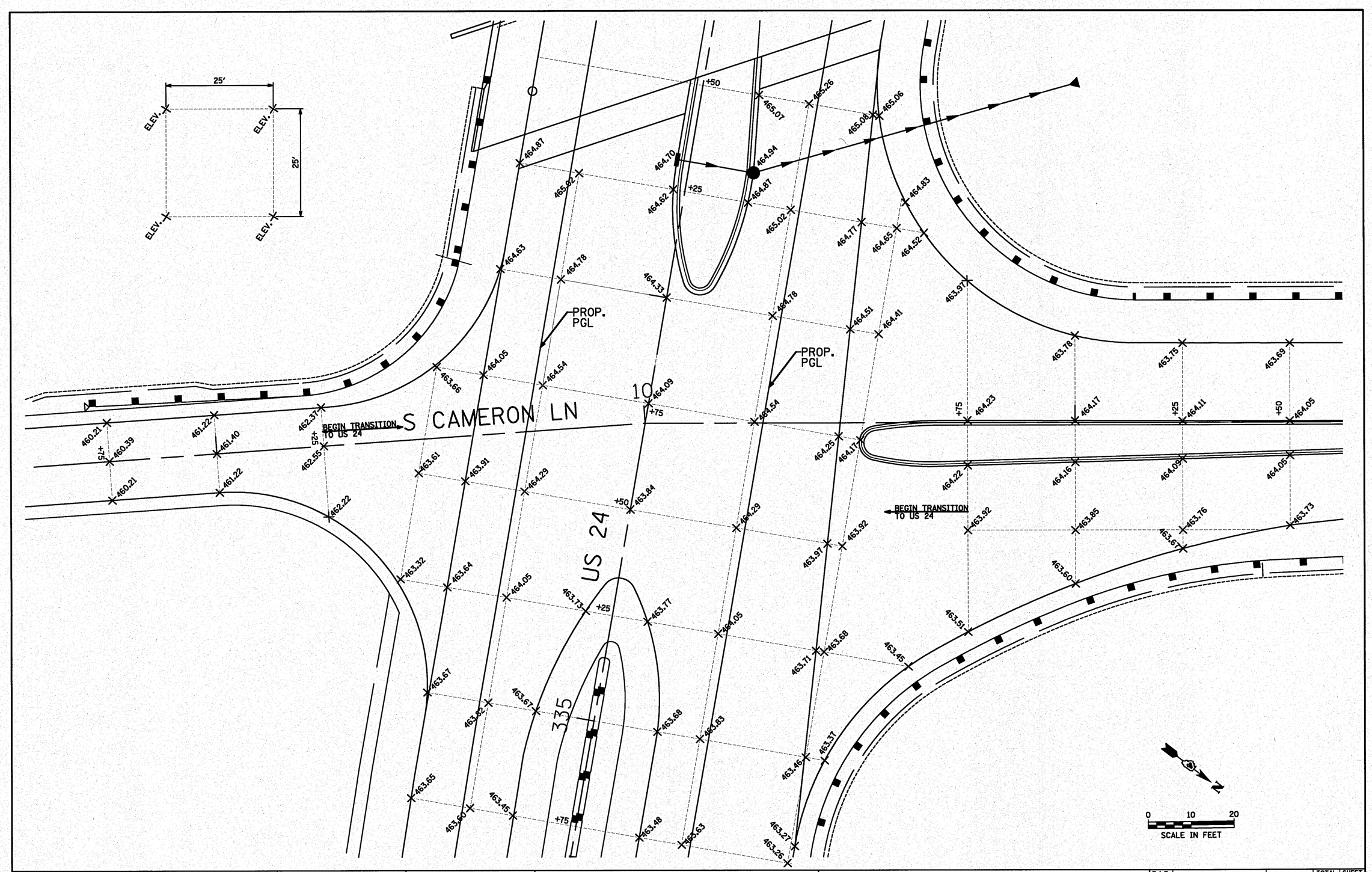

FILE NAME = ©FILE©	USER NAME = ©USER©	DESIGNED - ST	REVISED -	STATE OF ILLINOIS DEPARTMENT OF TRANSPORTATION	INTERSECTION DETAILS US 24 & S CAMERON LANE	F.A.P RTE.	SECTION	COUNTY	TOTAL SHEETS	SHEET NO.
		DRAWN - ST	REVISED -			317	45BR-2	PEORIA	122	44
	PLOT SCALE = ©SCALE©	CHECKED - FML	REVISED -					CONTRACT NO. 68719		
	PLOT DATE = ©DATE©	DATE - 10-15-2010	REVISED -		SCALE: 1" = 10' / SHEET NO. 1 OF 1 SHEETS / STA. TO STA.		ILLINOIS	FED. AID PROJECT		

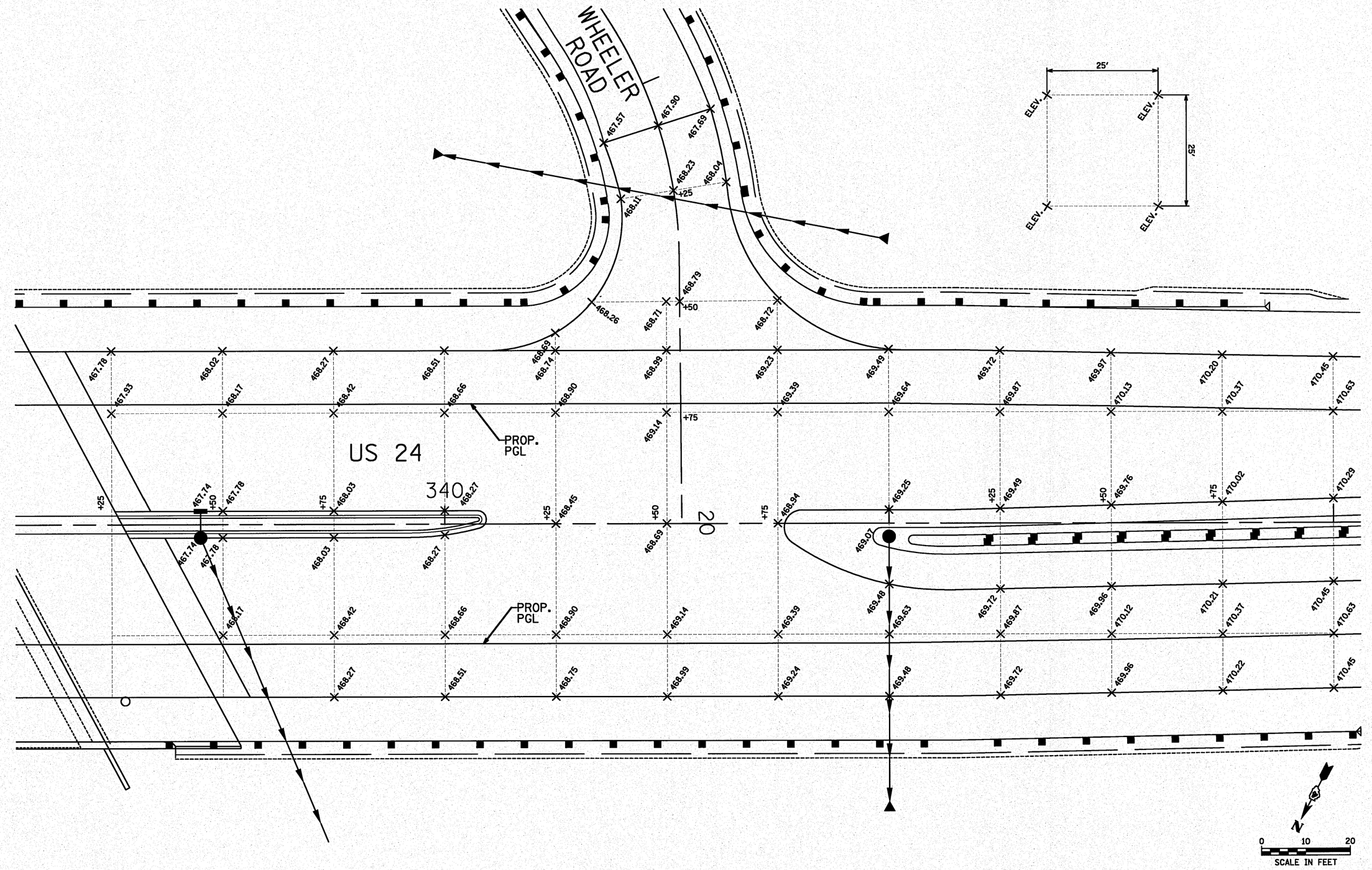

FILE NAME = ⊕FILEL⊕	USER NAME = ⊕USER⊕	DESIGNED - ST	REVISED -	STATE OF ILLINOIS DEPARTMENT OF TRANSPORTATION	INTERSECTION DETAILS US 24 & WHEELER ROAD	F.A.P RTE.	SECTION	COUNTY	TOTAL SHEETS	SHEET NO.
		DRAWN - ST	REVISED -			317	45BR-2	PEORIA	122	45
	PLOT SCALE = ⊕SCALE⊕	CHECKED - FML	REVISED -					CONTRACT NO. 68719		
	PLOT DATE = ⊕DATE⊕	DATE - 10-15-2010	REVISED -		SCALE: 1" = 10' / SHEET NO. 1 OF 1 SHEETS / STA. / TO STA.			ILLINOIS FED. AID PROJECT		

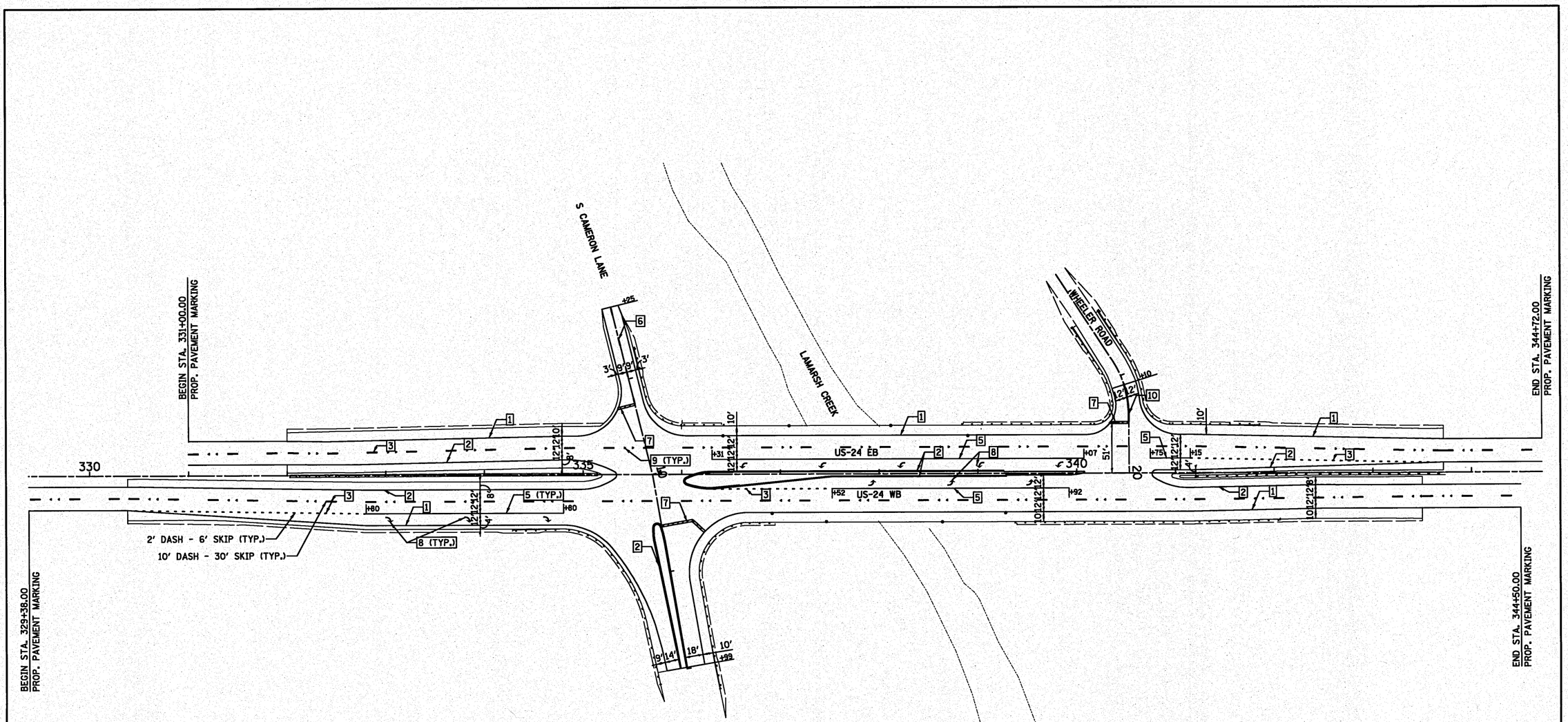

TYPICAL PAVEMENT MARKING LEGEND

1. EPOXY PAVEMENT MARKING - LINE 4" (SOLID WHITE)
2. EPOXY PAVEMENT MARKING - LINE 4" (SOLID YELLOW)
3. EPOXY PAVEMENT MARKING - LINE 4" (SKIP - DASH WHITE)
4. EPOXY PAVEMENT MARKING - LINE 6" (SOLID WHITE)
5. EPOXY PAVEMENT MARKING - LINE 8" (SOLID WHITE)
6. EPOXY PAVEMENT MARKING - LINE 4" (SKIP - DASH YELLOW)
7. EPOXY PAVEMENT MARKING - LINE 24" (SOLID WHITE)
8. EPOXY PAVEMENT MARKING - LETTERS AND SYMBOLS
9. ONE-WAY CRYSTAL MARKER
10. EPOXY PAVEMENT MARKING - LINE 4" (DOUBLE YELLOW)

NOTES:

1. PAVEMENT MARKINGS TO BE INSTALLED IN ACCORDANCE WITH DISTRICT STANDARD 780001-D4 AND HIGHWAY STANDARD 780001.

N

0 50' 100'
SCALE 1" = 50'

FILE NAME = ©FILEL©	USER NAME = ©USER©	DESIGNED - SEW	REVISED -	STATE OF ILLINOIS DEPARTMENT OF TRANSPORTATION	PAVEMENT MARKING PLAN US-24 OVER LAMARSH CREEK	F.A. RTE.	SECTION	COUNTY	TOTAL SHEETS	SHEET NO.
		DRAWN - SEW	REVISED -			317	45BR-2	PEORIA	122	46
	PLOT SCALE = ©SCALE©	CHECKED - FML	REVISED -					CONTRACT NO. 68719		
	PLOT DATE = ©DATE©	DATE - 10-15-2010	REVISED -		SCALE: 1" = 50' / SHEET NO. 1 OF 1 SHEETS / STA. 329+38 TO STA. 344+72		ILLINOIS FED. AID PROJECT			

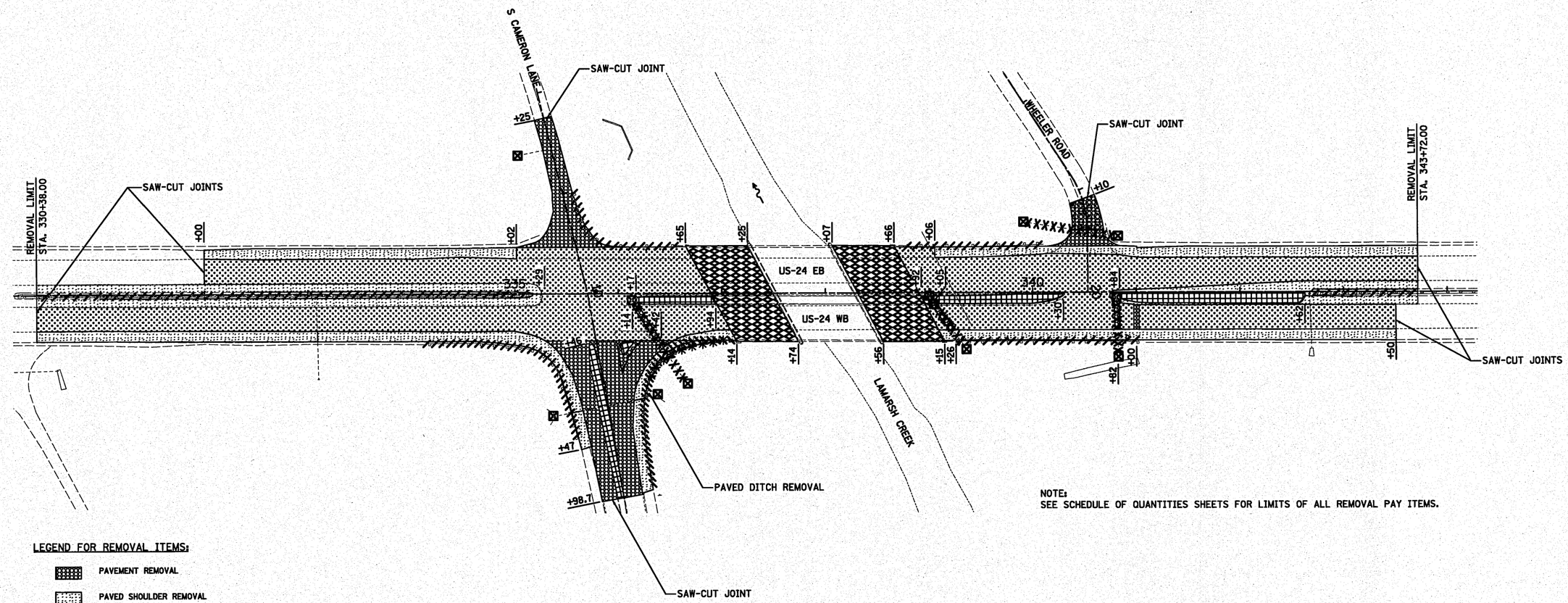

NOTE:
SEE SCHEDULE OF QUANTITIES SHEETS FOR LIMITS OF ALL REMOVAL PAY ITEMS.

LEGEND FOR REMOVAL ITEMS:

- PAVEMENT REMOVAL
- PAVED SHOULDER REMOVAL
- HOT MIX ASPHALT SURFACE REMOVAL, VARIABLE DEPTH
- CONCRETE MEDIAN REMOVAL
- APPROACH SLAB REMOVAL
- HOT MIX ASPHALT CURB REMOVAL
- GUARDRAIL REMOVAL
- STORM SEWER REMOVAL
- PIPE CULVERT REMOVAL
- DRAINAGE STRUCTURE/END SECTION REMOVAL

N

0 50' 100'
SCALE 1" = 50'

FILE NAME = ©FILEL©	USER NAME = ©USER©	DESIGNED - SEW	REVISED -	STATE OF ILLINOIS DEPARTMENT OF TRANSPORTATION	REMOVAL PLAN US-24 OVER LAMARSH CREEK	F.A. RTE.	SECTION	COUNTY	TOTAL SHEETS	SHEET NO.
		DRAWN - SEW	REVISED -			317	45BR-2	PEORIA	122	47
	PLOT SCALE = ©SCALE©	CHECKED - FML	REVISED -					CONTRACT NO. 68719		
	PLOT DATE = ©DATE©	DATE - 10-15-2010	REVISED -		SCALE: 1" = 50' / SHEET NO. 1 OF 1 SHEETS / STA. 330+38 TO STA. 343+72			ILLINOIS FED. AID PROJECT		

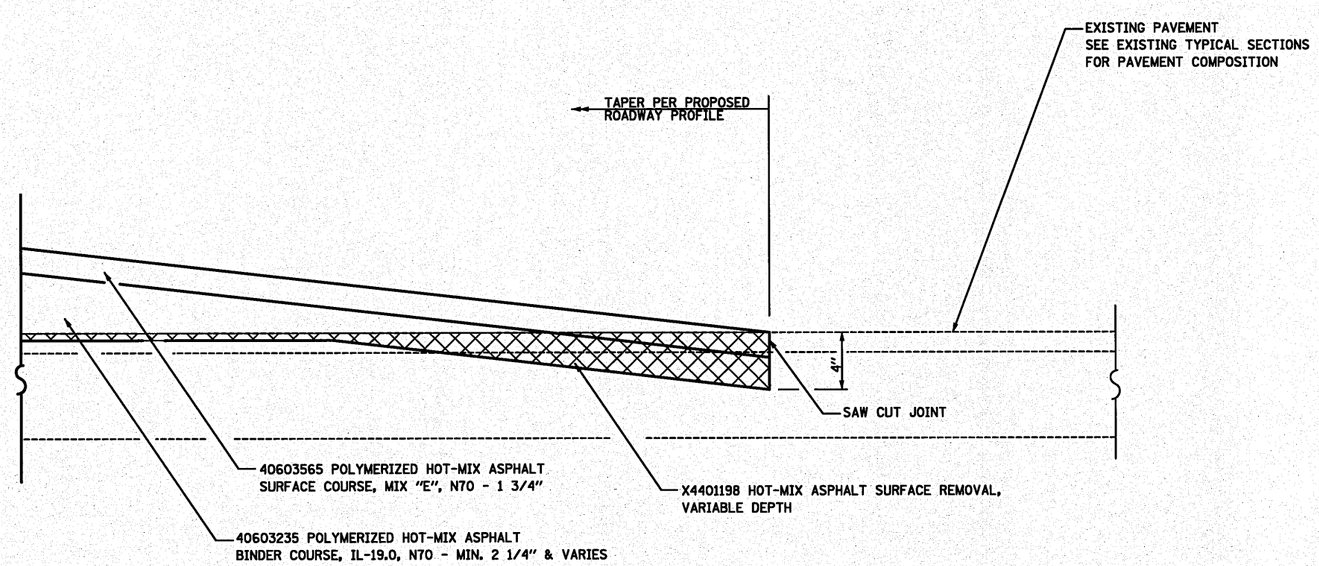

SAW CUT JOINT DETAIL

US ROUTE 24:
STA. 332+00.00 (E.B)
STA. 330+38.00 (W.B.)
STA. 343+72.00 (E.B.)
STA. 343+50.00 (W.B.)

NOTES FOR SAW CUT JOINT:

1. SURFACE REMOVAL WILL BE PAID FOR AT THE CONTRACT UNIT PRICE PER SQUARE YARD FOR HOT-MIX ASPHALT SURFACE REMOVAL, VARIABLE DEPTH, AT LOCATIONS AS SPECIFIED IN THE PLANS. THIS WORK SHALL BE PERFORMED IN ACCORDANCE WITH THE APPLICABLE PORTIONS OF SECTION 406.

2. THE SAW CUT JOINT AND THE BASE SHALL BE PRIMED JUST PRIOR TO THE PLACING OF HOT MIX ASPHALT MATERIAL. THE WORK WILL BE IN ACCORDANCE WITH THE APPLICABLE PORTIONS OF ARTICLE 406.06.

3. COMPOSTIONS AND DIMENSIONS SHOWN IN ABOVE DETAIL ARE FOR MAINLINE US ROUTE 24. SAW CUT JOINTS SHALL ALSO BE PROVIDED FOR CAMERON LANE AND WHEELER ROAD PROJECT LIMITS. SEE PROPOSED TYPICAL SECTIONS SHEETS FOR PROPOSED PAVEMENT COMPOSITIONS FOR THE SIDEROADS.

FILE NAME = ©FILEL©	USER NAME = ©USER©	DESIGNED - SEW	REVISED -	STATE OF ILLINOIS DEPARTMENT OF TRANSPORTATION	SAW CUT JOINT DETAIL US ROUTE 24 OVER LAMARSH CREEK	F.A.P. RTE.	SECTION	COUNTY	TOTAL SHEETS	SHEET NO.
		DRAWN - SEW	REVISED -			317	45BR-2	PEORIA	122	48
	PLOT SCALE = ©SCALE©	CHECKED - FML	REVISED -					CONTRACT NO. 68719		
	PLOT DATE = ©DATE©	DATE - 10-15-2010	REVISED -		SCALE: NONE / SHEET NO. 1 OF 1 SHEETS / STA. / TO STA.	FED. ROAD DIST. NO.	ILLINOIS	FED. AID PROJECT		

STATE OF ILLINOIS
DEPARTMENT OF TRANSPORTATION

Bench Mark: Brass Disk in Concrete Monument stamped "Peoria County G.I.S. Monument" on East Side of Cameron Lane next to a Red Witness Post at Station 335+82.62, 310.12' Right. Elevation 462.45

Existing Structure: S.N. 072-0010 was originally built in 1955 as S.B.I. Route 9, Section 45-R-B. The 1955 superstructure (current eastbound superstructure) consists of 3 span continuous variable depth reinforced concrete beams. In 1975 the bridge was rehabilitated and widened using 3 simple spans, PPC Deck Beams. In 2002 or 2003 a 5" concrete wearing surface was placed on the westbound lanes. In 2007 the bridge was rehabilitated and 9 PPC Deck Beams were replaced. The substructure consists of spill-thru pile supported abutments and solid piers (partly pile supported and partly spread footings). 203'-2" back to back abutments and 92'-10" out-to-out of deck. Structure will be removed and replaced using stage construction.

No salvage

DESIGN SPECIFICATIONS

2007 AASHTO LRFD Bridge Design Specifications
with 2008 & 2009 Interims

SEISMIC DATA

Seismic Performance Zone (SPZ) = 1
Design Spectral Acceleration at 1.0 sec. (S_{D1}) = 0.12g
Design Spectral Acceleration at 0.2 sec. (S_{DS}) = 0.18g
Soil Site Class = D

DESIGN STRESSES

FIELD UNITS

f'c = 3,500 psi
fy = 60,000 psi (Reinforcement)
fy = 50,000 psi (M270 Grade 50W)

LOADING HL-93

Allow 50#/sq. ft. for
future wearing surface

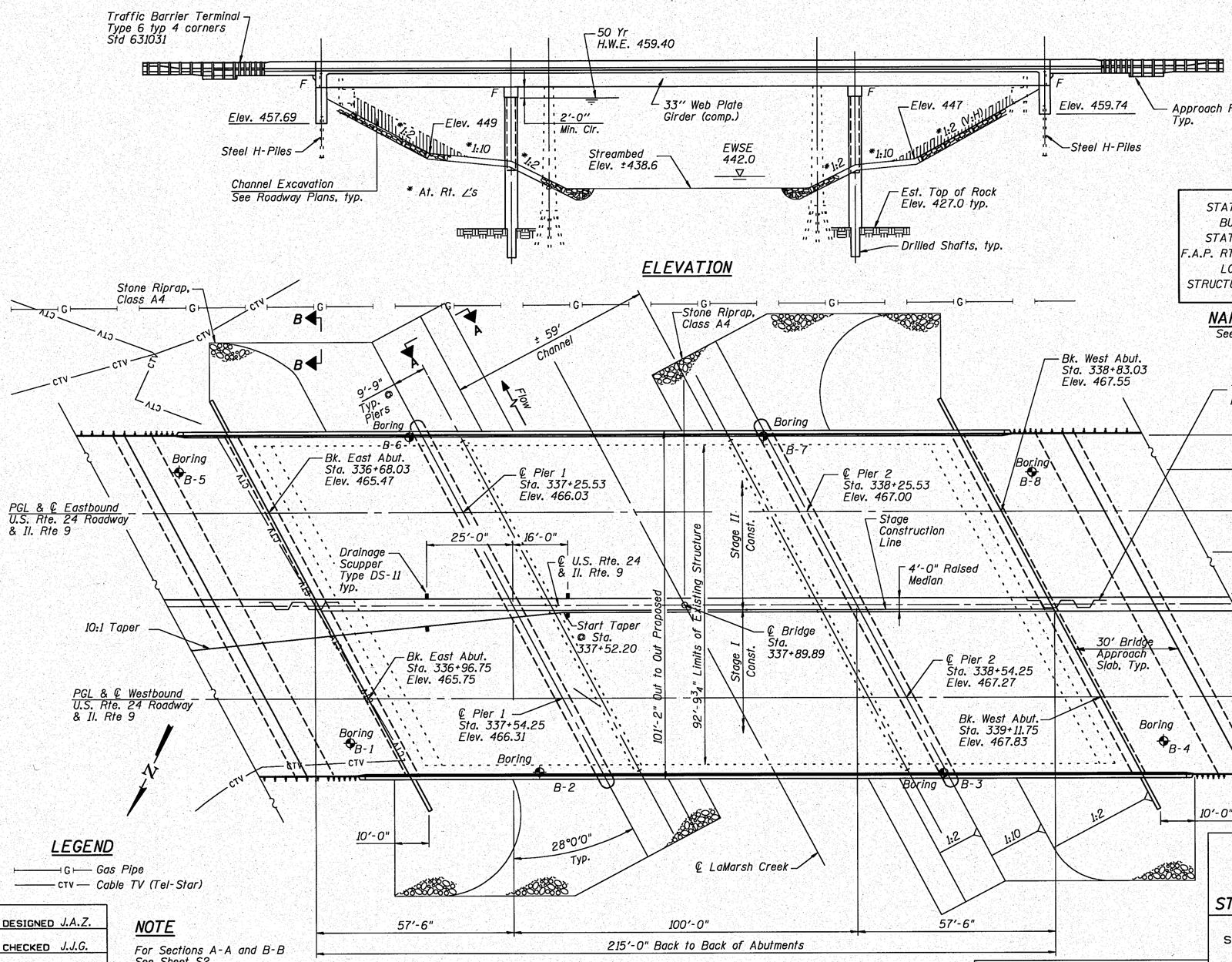

STATION 337+89.89
BUILT 201_ BY
STATE OF ILLINOIS
F.A.P. RT. 317 SEC. 45BR-2
LOADING HL-93
STRUCTURE NO. 072-0228

NAME PLATE

See Std. 515001

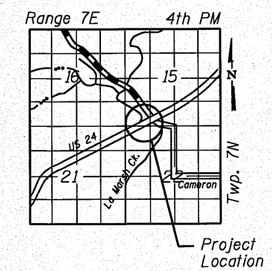

LOCATION SKETCH

APPROVED
For Structural Adequacy Only

Ralph E. Anderson (TBD)
Engineer of Bridges & Structures

STATE OF ILLINOIS
JOHN A. ZEMAITIS
001-056700
CHICAGO, IL
LICENSED STRUCTURAL ENGINEER
10/15/2010
EXPIRES 11/30/2012

LEGEND

G — Gas Pipe
CTV — Cable TV (Tel-Star)

DESIGNED	J.A.Z.
CHECKED	J.J.G.
DRAWN	E.E.J.
CHECKED	J.A.Z.

NOTE

For Sections A-A and B-B
See Sheet S2.

GRāEF
8501 W. Higgins Road; Suite 280
Chicago, Illinois 60631
(773) 399-0112

GENERAL PLAN & ELEVATION

U.S. ROUTE 24 & IL ROUTE 9 OVER LA MARSH CREEK

STATION 337+89.89 STRUCTURE NO. 072-0228

SHEET NO.	F.A.P. RTE.	SECTION	COUNTY	TOTAL SHEETS	SHEET NO.
S1 OF 39 SHEETS	317	45BR-2	PEORIA	122	49
			CONTRACT NO. 68719		
	10-15-10	ILLINOIS	FED. AID PROJECT		

h:\jobs2010\2010314\cad\dot_structural\dgn\001\S01_GP&E.dgn
10/15/2010

STATE OF ILLINOIS
DEPARTMENT OF TRANSPORTATION

GENERAL NOTES

1. Fasteners shall be AASHTO M164 Type 1, mechanically galvanized bolts in painted areas and M164 Type 3 in unpainted areas. Bolts are $\frac{7}{8}$" diameter in $\frac{15}{16}$" diameter holes unless otherwise noted.
2. Calculated weight of Structural Steel = 490,090 lbs.
3. All structural steel shall be AASHTO M 270 Grade 50W. All structural steel shall be cleaned as specified in the Special Provision for "Surface Preparation and Painting Requirements for Weathering Steel".
4. No field welding is permitted except as specified in the contract documents.
5. Reinforcement bars shall conform to the requirements of ASTM A 706 Gr. 60. See Special Provisions.
6. Reinforcement bars designated (E) shall be epoxy coated.
7. Bearing seat surfaces shall be constructed or adjusted to the designated elevations within a tolerance of $\frac{1}{8}$ in. (0.01 ft.). Adjustment shall be made either by grinding the surface or by shimming the bearings.
8. Structural steel shall be only painted for a distance equal to the depth of embedment into the concrete cap plus 3 inches. Painted areas shall be primed in the shop with a Department approved zinc rich primer. Field painting will not be required.
9. Layout of the slope protection system may be varied to suit ground conditions in the field as directed by the Engineer.
10. The Contractor is advised that the existing structure contains members that are in a deteriorated condition with reduced load carrying capacity. It is the Contractor's responsibility to account for the condition of the existing structure when developing construction procedures for the complete or partial removal, or replacement of the structure.
11. Slipforming of the parapets is not allowed.
12. If the Contractor chooses to alter the temporary cantilevered sheet piling design requirements shown on the plans, a design submittal including plan details and calculations will be required for review and acceptance by the Engineer.

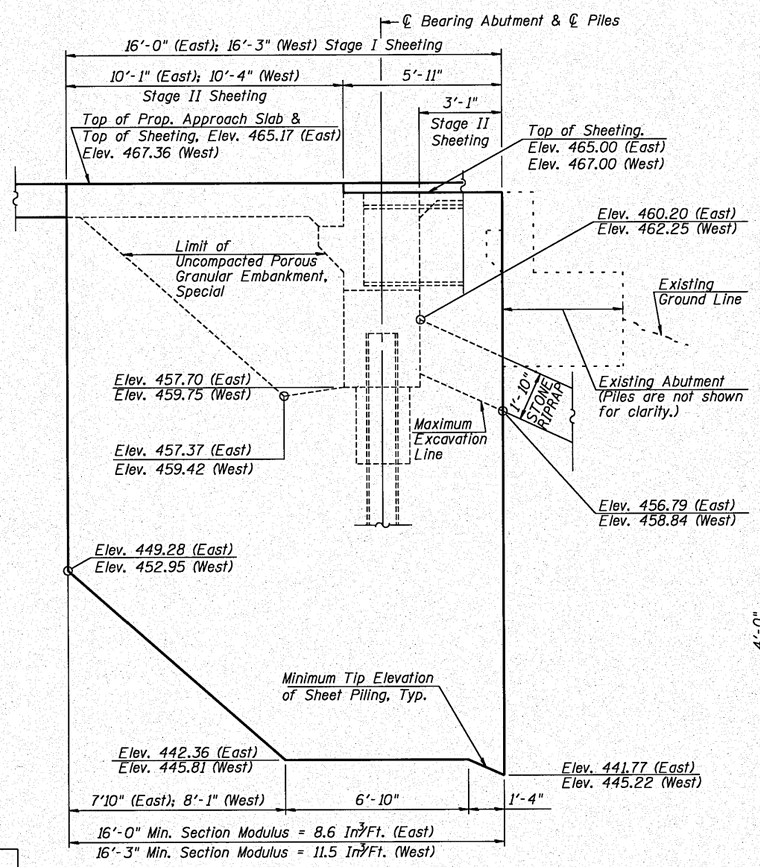

ELEVATION VIEW OF TEMPORARY SHEET PILING
LOOKING SOUTH AT EAST ABUTMENT,
LOOKING NORTH AT WEST ABUTMENT

TOTAL BILL OF MATERIAL

ITEM	UNIT	SUPER	SUB	TOTAL
Porous Granular Embankment, Special	CU YD	-	353	353
Stone Riprap, Class A4	SQ YD	-	3,334	3,334
Filter Fabric	SQ YD	-	3,334	3,334
Removal of Existing Structures	EACH	-	-	1
Structure Excavation	CU YD	-	730	730
Concrete Structures	CU YD	69.8	408.7	478.5
Concrete Superstructure	CU YD	1,037.5	-	1,037.5
Bridge Deck Grooving	SQ YD	2,701	-	2,701
Concrete Encasement	CU YD	-	12.2	12.2
Protective Coat	SQ YD	3,240	-	3,240
Furnishing & Erecting Structural Steel	L. SUM	1	-	1
Stud Shear Connectors	EACH	10,878	-	10,878
Reinforcement Bars	POUND	-	10,000	10,000
Reinforcement Bars, Epoxy Coated	POUND	263,240	102,190	365,430
Bar Splicers	EACH	1,206	710	1,916
Furnishing Steel Piles HP12x53	FOOT	-	1,411	1,411
Driving Piles	FOOT	-	1,411	1,411
Test Pile Steel HP12x53	EACH	-	2	2
Pile Shoes	EACH	-	36	36
Temporary Sheet Piling	SQ FT	-	657	657
Name Plates	EACH	1	-	1
Drilled Shaft In Soil	CU YD	-	120	120
Drilled Shaft in Rock	CU YD	-	26	26
Anchor Bolts, 1"	EACH	112	-	112
Geocomposite Wall Drain	SQ YD	-	182	182
Pipe Underdrains for Structures 4"	FOOT	-	302	302
Drainage Scuppers, DS-11	EACH	4	-	4
Underwater Structure Excavation Protection - Location 1	EACH	-	1	1
Underwater Structure Excavation Protection - Location 2	EACH	-	1	1
Mechanical Splicers	EACH	-	288	288
Asbestos Bearing Pad Removal	EACH	-	38	38

WATERWAY INFORMATION

Drainage Area = 42.35 mi² Existing Low Grade Elev. 463.10 @ Sta. 334+00.00
Proposed Low Grade Elev. 462.99 @ Sta. 334+00.00

Flood	Freq. Yr.	Q C.F.S.	Opening Sq. Ft. Exist.	Opening Sq. Ft. Prop.	Nat. H.W.E.	Head - Ft. Exist.	Head - Ft. Prop.	Headwater El. Exist.	Headwater El. Prop.
	10	5080	1374	1902	455.90	0.79	0.42	456.69	456.32
Design	50	8170	2004	2486	459.40	1.00	0.41	460.40	459.81
Base	100	9600	2059	2703	460.63	1.18	0.42	461.81	461.05
Overtopping									
Max. Calc.	500	13100	2059	2908	461.77	2.15	0.39	463.92	462.16

10 Year Velocity through Existing Bridge = 3.9 fps
10 Year Velocity through Proposed Structure = 2.6 fps

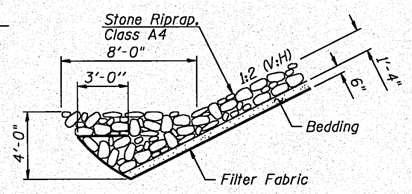

SECTION A-A

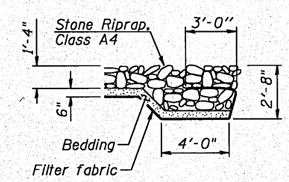

SECTION B-B

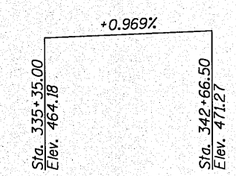

PROFILE GRADE
(along ℄ Westbound and ℄ Eastbound roadways)

INDEX OF SHEETS

S1. GENERAL PLAN & ELEVATION
S2. GENERAL NOTES & TOTAL BILL OF MATERIAL
S3. CONSTRUCTION STAGING
S4. TEMPORARY CONCRETE BARRIER FOR STAGE CONSTRUCTION
S5. TOP OF DECK SLAB ELEVATIONS I
S6. TOP OF DECK SLAB ELEVATIONS II
S7. TOP OF DECK SLAB ELEVATIONS III
S8. TOP OF DECK SLAB ELEVATIONS IV
S9. TOP OF DECK SLAB ELEVATIONS V
S10. TOP OF DECK SLAB ELEVATIONS VI
S11. TOP OF DECK SLAB ELEVATIONS VII
S12. TOP OF EAST APPROACH SLAB ELEVATIONS
S13. TOP OF WEST APPROACH SLAB ELEVATIONS
S14. DECK PLAN
S15. DECK CROSS SECTION
S16. DECK DETAILS
S17. DIAPHRAGMS & DRAINAGE DETAILS AT ABUTMENTS
S18. DRAINAGE SCUPPER DETAILS
S19. BRIDGE APPROACH SLAB
S20. BRIDGE APPROACH SLAB DETAILS
S21. FRAMING PLAN
S22. GIRDER ELEVATION
S23. FIELD SPLICES AND DIAPHRAGM DETAILS
S24. BEARING DETAILS
S25. EAST ABUTMENT
S26. WEST ABUTMENT
S27. ABUTMENT DETAILS
S28. PIERS 1 & 2
S29. PIER DETAILS
S30. HP PILES
S31. BAR SPLICER ASSEMBLY DETAILS
S32. BORING LOGS I
S33. BORING LOGS II & ROCK CORE LOG
S34. BORING LOGS III & ROCK CORE LOG
S35. BORING LOGS IV
S36. BORING LOGS V
S37. BORING LOGS VI & ROCK CORE LOG
S38. BORING LOGS VII & ROCK CORE LOG
S39. BORING LOGS VIII

DESIGN SCOUR ELEVATION TABLE

Design Scour Elevation (ft.)	E. Abut.	Pier 1	Pier 2	W. Abut.
	457.9	427.4	428.8	459.9

DESIGNED	J.A.Z.
CHECKED	J.J.G.
DRAWN	E.E.J.
CHECKED	J.A.Z.

h:\jobs2010\20103014\cad\idot_structural\dgn\B9\S02_GENERAL_NOTES.dgn
10/15/2010

GRAEF
8501 W. Higgins Road; Suite 280
Chicago, Illinois 60631
(773) 399-0112

GENERAL NOTES & TOTAL BILL OF MATERIAL
U.S. ROUTE 24 & IL ROUTE 9 OVER LA MARSH CREEK
STATION 337+89.89 STRUCTURE NO. 072-0228

SHEET NO.	F.A.P. RTE.	SECTION	COUNTY	TOTAL SHEETS	SHEET NO.
S2 OF 39 SHEETS	317	45BR-2	PEORIA	122	50
			CONTRACT NO. 68719		
	10-15-10	ILLINOIS	FED. AID PROJECT		

STATE OF ILLINOIS
DEPARTMENT OF TRANSPORTATION

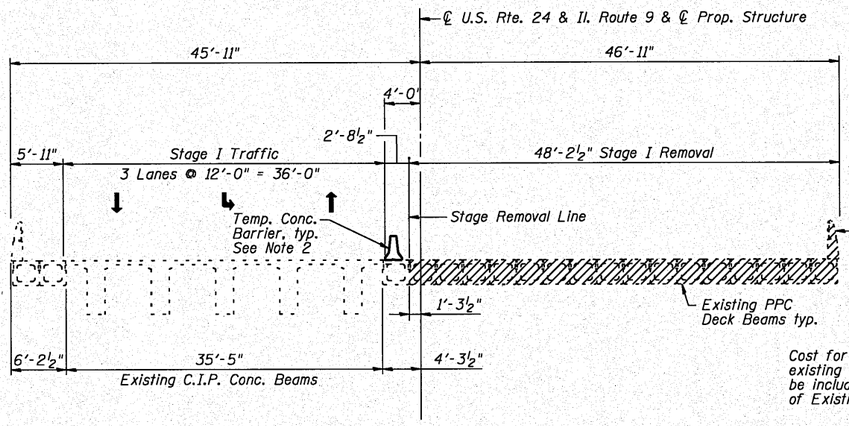

STAGE I REMOVAL
(Looking West)

Cost for removal of existing bridge rails shall be included with Removal of Existing Structures

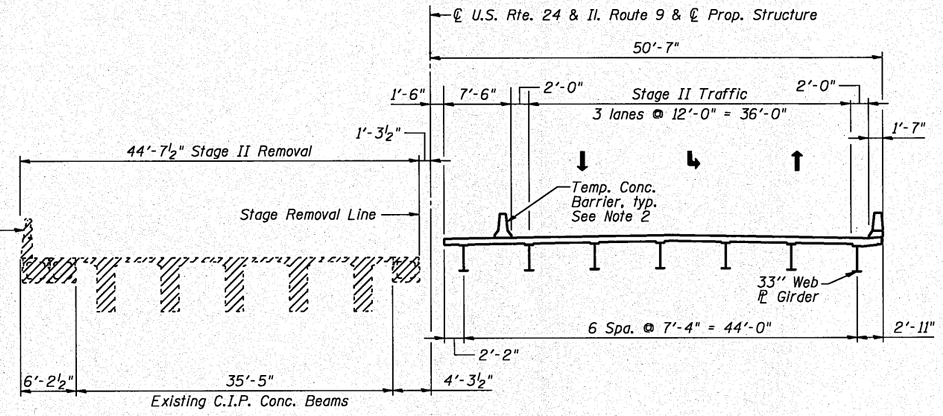

STAGE II REMOVAL
(Looking West)

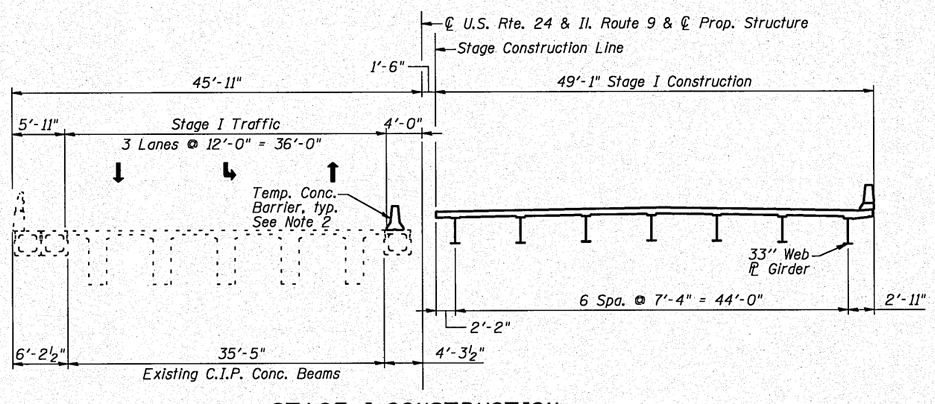

STAGE I CONSTRUCTION
(Looking West)

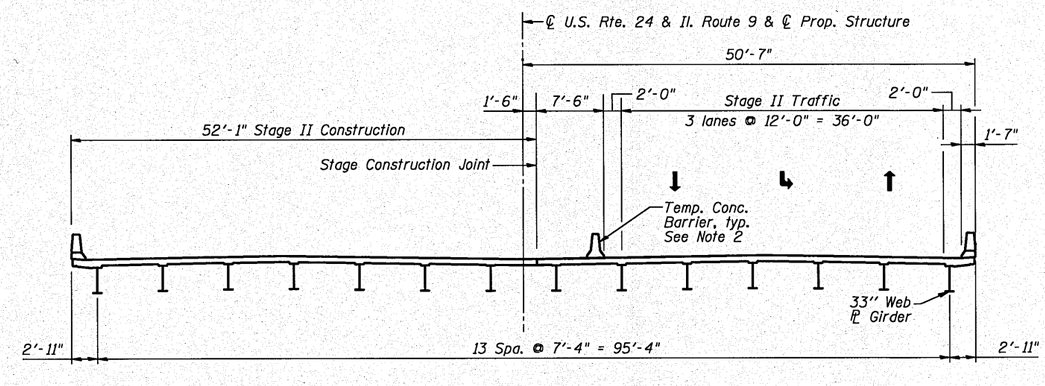

STAGE II CONSTRUCTION
(Looking West)

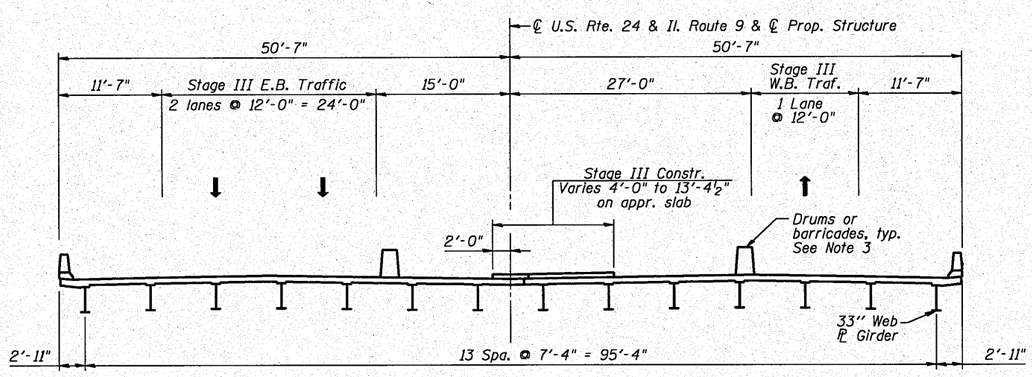

STAGE III CONSTRUCTION
(Looking West)

NOTES

1. The Stage Removal and Stage Construction for the bridge approach slab are the same as for the bridge deck.
2. See roadway maintenance of traffic plans for quantity of Temporary Concrete Barrier.
3. Drums or barricades in Stage III according to Highway Standard 701602. See roadway maintenance of traffic plans.

DESIGNED	J.A.Z.
CHECKED	J.J.G.
DRAWN	S.R.K.
CHECKED	J.A.Z.

GRAEF 8501 W. Higgins Road; Suite 280 Chicago, Illinois 60631 (773) 399-0112

CONSTRUCTION STAGING

U.S. ROUTE 24 & IL ROUTE 9 OVER LA MARSH CREEK

STATION 337+89.89 STRUCTURE NO. 072-0228

SHEET NO.	F.A.P. RTE.	SECTION	COUNTY	TOTAL SHEETS	SHEET NO.
SHEET NO. S3 OF 39 SHEETS	317	45BR-2	PEORIA	122	51
			CONTRACT NO. 68719		
	10-15-10	ILLINOIS	FED. AID PROJECT		

h:\jobs2010\2010301\cad\dot_structural\dgn\00\S03_STAGING.dgn
10/18/2010

STATE OF ILLINOIS
DEPARTMENT OF TRANSPORTATION

When "A" is 3'-6" or less, the temporary concrete barrier shall be anchored to the new slab according to Detail I or Detail II. No anchorage is required when "A" is greater than 3'-6".

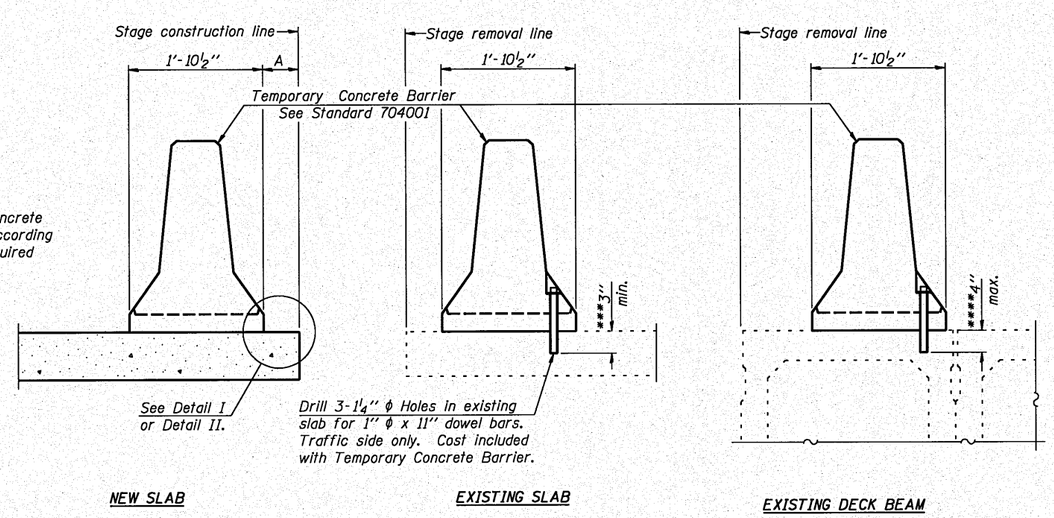

SECTIONS THRU SLAB OR DECK BEAM

NOTES

Detail I - With Bar Splicer or Couplers:
Connect one (1) 1"x7"x10" steel PL to the top layer of couplers with 2-⅝" ϕ bolts screwed to coupler at approximate ℄ of each barrier panel.

Detail II - With Extended Reinforcement Bars:
Connect one (1) 1"x7"x 10" steel PL to the concrete slab or concrete wearing surface with 2-⅝" ϕ Expansion Anchors or cast in place inserts spaced between the top layer of reinforcement at approximate ℄ of each barrier panel.

Cost of anchorage is included with Temporary Concrete Barrier.

The 1" x 7" x 10" plate shall not be removed until stage II construction forms and all reinforcement bars are in place and the concrete is ready to be placed.

*** Dimension shown is minimum required embedment into concrete. If hot-mix asphalt wearing surface is present, minimum embedment shall be in addition to wearing surface depth.

**** If existing deck beam is to remain in place after stage construction, embedment shall only be into wearing surface and not into existing deck beam concrete.

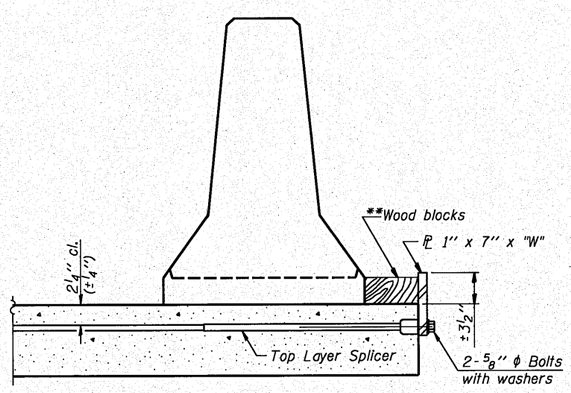

DETAIL I

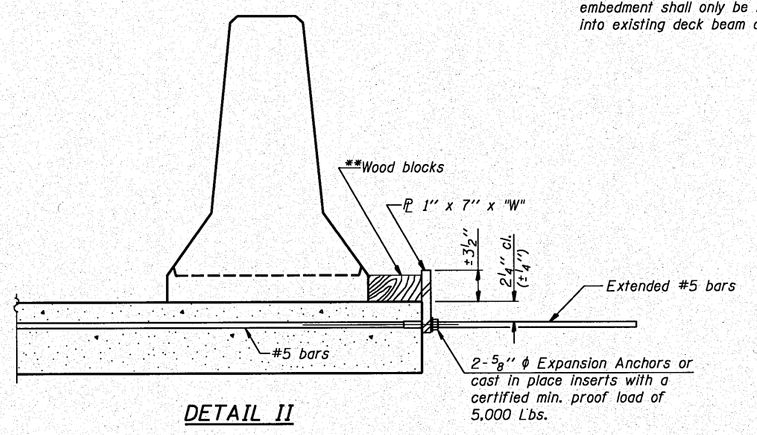

DETAIL II

** Wood blocks may be omitted when required to provide minimum stage traffic lane width. When the wood blocks are omitted, the concrete barrier shall be in direct contact with the steel retainer plate.

"W" = Top bars spacing + 4"

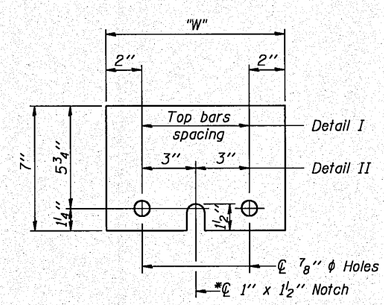

STEEL RETAINER PL 1" x 7" x 10"

* Required only with Detail II

TEMPORARY CONCRETE BARRIER FOR STAGE CONSTRUCTION
U.S. ROUTE 24 & IL ROUTE 9 OVER LA MARSH CREEK
STATION 337+89.89 STRUCTURE NO. 072-0228

SHEET NO. S4 OF 39 SHEETS	F.A.P. RTE.	SECTION	COUNTY	TOTAL SHEETS	SHEET NO.
	317	45BR-2	PEORIA	122	52
			CONTRACT NO. 68719		
	10-15-10	ILLINOIS	FED. AID PROJECT		

DESIGNED	J.A.Z.
CHECKED	E.E.J.
DRAWN	R.B.H.
CHECKED	E.E.J.

R-27 11-1-09

GRAEF 8501 W. Higgins Road; Suite 280 Chicago, Illinois 60631 (773) 399-0112

h:\jobs2818\2818\3814\cad\dot_structural\dgn\00\S04_TEMP_CONC_BARRIER.dgn 10/18/2010

STATE OF ILLINOIS
DEPARTMENT OF TRANSPORTATION

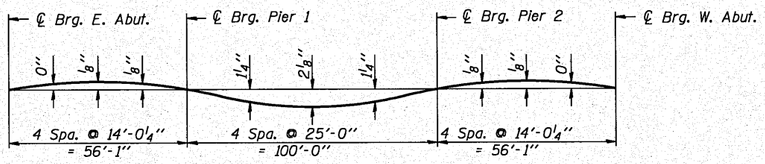

DEAD LOAD DEFLECTION DIAGRAM

(Includes weight of concrete only.)

Note: The above deflections are not to be used in the field if the engineer is working from the grade elevations adjusted for dead load deflections as shown on Sheets S6 thru S11 of 39.

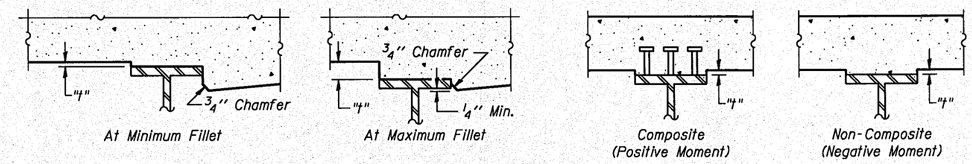

EXTERIOR BEAMS

INTERIOR BEAMS

To determine "f": After all structural steel has been erected, elevations of the top flanges of the beams shall be taken at intervals shown below. These elevations subtracted from the "Theoretical Grade Elevations Adjusted for Dead Load Deflection" shown on Sheets S6 thru S11, minus slab thickness, equal the fillet heights "f" above top flange of beams.

FILLET HEIGHTS

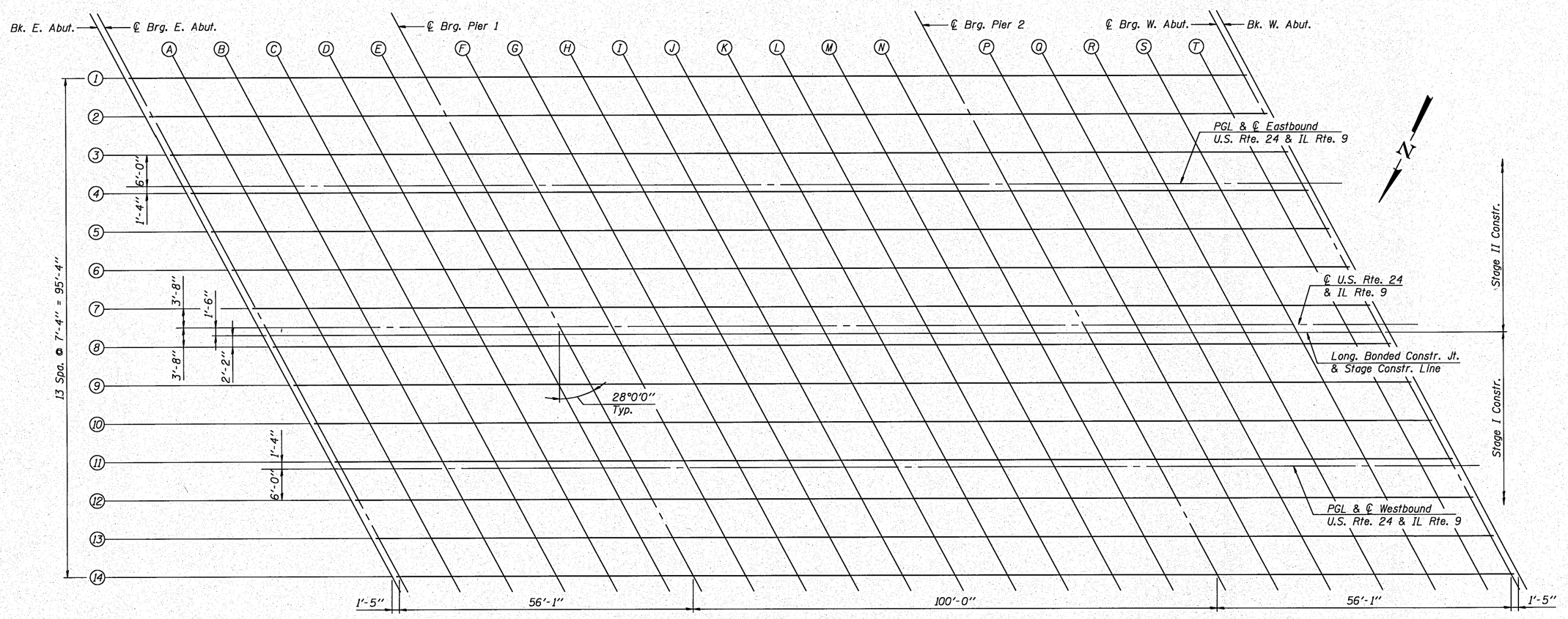

PLAN

TOP OF DECK SLAB ELEVATIONS I

U.S. ROUTE 24 & IL ROUTE 9 OVER LA MARSH CREEK

STATION 337+89.89 STRUCTURE NO. 072-0228

SHEET NO. S5 OF 39 SHEETS	F.A.P. RTE.	SECTION	COUNTY	TOTAL SHEETS	SHEET NO.
	317	45BR-2	PEORIA	122	53
			CONTRACT NO. 68719		
	10-15-10	ILLINOIS	FED. AID PROJECT		

DESIGNED	J.Z.
CHECKED	J.A.Z.
DRAWN	E.E.J.
CHECKED	J.A.Z.

GRAEF 8501 W. Higgins Road; Suite 280 Chicago, Illinois 60631 (773) 399-0112

h:\jobs2010\2010301\cad\dot_structural\dgn\00\S95_DECK_ELEVATIONS_I.dgn 10/18/2010

STATE OF ILLINOIS
DEPARTMENT OF TRANSPORTATION

BEAM 1

Location	Station	Offset	Theoretical Grade Elevations	Theoretical Grade Elevations Adjusted For Dead Load Deflection
Bk. E. Abut.	336+57.05	-20.67	464.99	464.99
CL. BRG. E. Abut.	336+58.46	-20.67	465.01	465.01
A	336+68.46	-20.67	465.11	465.11
B	336+78.46	-20.67	465.20	465.20
C	336+88.46	-20.67	465.30	465.29
D	336+98.46	-20.67	465.40	465.38
E	337+08.46	-20.67	465.49	465.48
CL. Pier 1	337+14.55	-20.67	465.55	465.55
F	337+24.55	-20.67	465.65	465.68
G	337+34.55	-20.67	465.75	465.83
H	337+44.55	-20.67	465.84	465.97
I	337+54.55	-20.67	465.94	466.10
J	337+64.55	-20.67	466.04	466.21
K	337+74.55	-20.67	466.13	466.29
L	337+84.55	-20.67	466.23	466.36
M	337+94.55	-20.67	466.33	466.41
N	338+04.55	-20.67	466.42	466.46
CL. PIER 2	338+14.55	-20.67	466.52	466.52
P	338+24.55	-20.67	466.62	466.61
Q	338+34.55	-20.67	466.71	466.70
R	338+44.55	-20.67	466.81	466.81
S	338+54.55	-20.67	466.91	466.91
T	338+64.55	-20.67	467.01	467.01
CL. BRG. W. Abut.	338+70.63	-20.67	467.06	467.06
Bk. W. Abut.	338+72.05	-20.67	467.08	467.08

BEAM 2

Location	Station	Offset	Theoretical Grade Elevations	Theoretical Grade Elevations Adjusted For Dead Load Deflection
Bk. E. Abut.	336+60.94	-13.33	465.19	465.19
℄ Brg. E. Abut.	336+62.36	-13.33	465.20	465.20
A	336+72.36	-13.33	465.30	465.30
B	336+82.36	-13.33	465.39	465.39
C	336+92.36	-13.33	465.49	465.48
D	337+02.36	-13.33	465.59	465.57
E	337+12.36	-13.33	465.68	465.67
℄ Brg. Pier 1	337+18.44	-13.33	465.74	465.74
F	337+28.44	-13.33	465.84	465.87
G	337+38.44	-13.33	465.94	466.02
H	337+48.44	-13.33	466.03	466.16
I	337+58.44	-13.33	466.13	466.29
J	337+68.44	-13.33	466.23	466.40
K	337+78.44	-13.33	466.32	466.49
L	337+88.44	-13.33	466.42	466.55
M	337+98.44	-13.33	466.52	466.60
N	338+08.44	-13.33	466.61	466.65
℄ Brg. Pier 2	338+18.44	-13.33	466.71	466.71
P	338+28.44	-13.33	466.81	466.80
Q	338+38.44	-13.33	466.91	466.89
R	338+48.44	-13.33	467.00	467.00
S	338+58.44	-13.33	467.10	467.10
T	338+68.44	-13.33	467.20	467.20
℄ Brg. W. Abut.	338+74.53	-13.33	467.25	467.25
Bk. W. Abut.	338+75.94	-13.33	467.27	467.27

BEAM 3

Location	Station	Offset	Theoretical Grade Elevations	Theoretical Grade Elevations Adjusted For Dead Load Deflection
Bk. E. Abut.	336+64.84	-6.00	465.34	465.34
℄ Brg. E. Abut.	336+66.26	-6.00	465.36	465.36
A	336+76.26	-6.00	465.46	465.46
B	336+86.26	-6.00	465.55	465.55
C	336+96.26	-6.00	465.65	465.64
D	337+06.26	-6.00	465.75	465.73
E	337+16.26	-6.00	465.84	465.83
℄ Brg. Pier 1	337+22.34	-6.00	465.90	465.90
F	337+32.34	-6.00	466.00	466.03
G	337+42.34	-6.00	466.10	466.18
H	337+52.34	-6.00	466.19	466.32
I	337+62.34	-6.00	466.29	466.45
J	337+72.34	-6.00	466.39	466.56
K	337+82.34	-6.00	466.48	466.65
L	337+92.34	-6.00	466.58	466.71
M	338+02.34	-6.00	466.68	466.76
N	338+12.34	-6.00	466.77	466.81
℄ Brg. Pier 2	338+22.34	-6.00	466.87	466.87
P	338+32.34	-6.00	466.97	466.95
Q	338+42.34	-6.00	467.06	467.05
R	338+52.34	-6.00	467.16	467.16
S	338+62.34	-6.00	467.26	467.26
T	338+72.34	-6.00	467.36	467.36
℄ Brg. W. Abut.	338+78.43	-6.00	467.41	467.41
Bk. W. Abut.	338+79.84	-6.00	467.43	467.43

NOTE

Offsets for Beams 1-7 are measured from the Eastbound PGL. Offsets for the Stage Construction Line and Beams 8-14 are measured from the Westbound PGL.

TOP OF DECK SLAB ELEVATIONS II

U.S. ROUTE 24 & IL ROUTE 9 OVER LA MARSH CREEK

STATION 337+89.89 STRUCTURE NO. 072-0228

SHEET NO. S6 OF 39 SHEETS	F.A.P. RTE.	SECTION	COUNTY	TOTAL SHEETS	SHEET NO.
	317	45BR-2	PEORIA	122	54
			CONTRACT NO. 68719		
	10-15-10	ILLINOIS	FED. AID PROJECT		

DESIGNED	J.Z.
CHECKED	J.A.Z.
DRAWN	S.R.K.
CHECKED	E.E.J.

GRāEF 8501 W. Higgins Road; Suite 280 Chicago, Illinois 60631 (773) 399-0112

h:\jobs2010\20103014\cad\udot_structural\dgn\00\S06_DECK_ELEVATIONS_II.dgn 10/18/2010

STATE OF ILLINOIS
DEPARTMENT OF TRANSPORTATION

U.S. RTE. 24 & IL RTE. 9 EASTBOUND PGL

Location	Station	Offset	Theoretical Grade Elevations	Theoretical Grade Elevations Adjusted For Dead Load Deflection
Bk. E. Abut.	336+68.03	0.00	465.47	465.47
℄ Brg. E. Abut.	336+69.45	0.00	465.48	465.48
A	336+79.45	0.00	465.58	465.58
B	336+89.45	0.00	465.68	465.68
C	336+99.45	0.00	465.77	465.77
D	337+09.45	0.00	465.87	465.86
E	337+19.45	0.00	465.97	465.96
℄ Brg. Pier 1	337+25.53	0.00	466.03	466.03
F	337+35.53	0.00	466.12	466.16
G	337+45.53	0.00	466.22	466.30
H	337+55.53	0.00	466.32	466.45
I	337+65.53	0.00	466.41	466.58
J	337+75.53	0.00	466.51	466.68
K	337+85.53	0.00	466.61	466.77
L	337+95.53	0.00	466.70	466.83
M	338+05.53	0.00	466.80	466.88
N	338+15.53	0.00	466.90	466.93
℄ Brg. Pier 2	338+25.53	0.00	467.00	467.00
P	338+35.53	0.00	467.09	467.08
Q	338+45.53	0.00	467.19	467.18
R	338+55.53	0.00	467.29	467.28
S	338+65.53	0.00	467.38	467.38
T	338+75.53	0.00	467.48	467.48
℄ Brg. W. Abut.	338+81.62	0.00	467.54	467.54
Bk. W. Abut.	338+83.03	0.00	467.55	467.55

BEAM 4

Location	Station	Offset	Theoretical Grade Elevations	Theoretical Grade Elevations Adjusted For Dead Load Deflection
Bk. E. Abut.	336+68.74	1.33	465.46	465.46
℄ Brg. E. Abut.	336+70.16	1.33	465.47	465.47
A	336+80.16	1.33	465.57	465.57
B	336+90.16	1.33	465.66	465.66
C	337+00.16	1.33	465.76	465.75
D	337+10.16	1.33	465.86	465.84
E	337+20.16	1.33	465.95	465.94
℄ Brg. Pier 1	337+26.24	1.33	466.01	466.01
F	337+36.24	1.33	466.11	466.14
G	337+46.24	1.33	466.21	466.29
H	337+56.24	1.33	466.30	466.43
I	337+66.24	1.33	466.40	466.56
J	337+76.24	1.33	466.50	466.67
K	337+86.24	1.33	466.59	466.76
L	337+96.24	1.33	466.69	466.82
M	338+06.24	1.33	466.79	466.87
N	338+16.24	1.33	466.88	466.92
℄ Brg. Pier 2	338+26.24	1.33	466.98	466.98
P	338+36.24	1.33	467.08	467.07
Q	338+46.24	1.33	467.18	467.16
R	338+56.24	1.33	467.27	467.27
S	338+66.24	1.33	467.37	467.37
T	338+76.24	1.33	467.47	467.47
℄ Brg. W. Abut.	338+82.33	1.33	467.52	467.52
Bk. W. Abut.	338+83.74	1.33	467.54	467.54

BEAM 5

Location	Station	Offset	Theoretical Grade Elevations	Theoretical Grade Elevations Adjusted For Dead Load Deflection
Bk. E. Abut.	336+72.64	8.67	465.38	465.38
℄ Brg. E. Abut.	336+74.06	8.67	465.39	465.39
A	336+84.06	8.67	465.49	465.49
B	336+94.06	8.67	465.59	465.59
C	337+04.06	8.67	465.68	465.68
D	337+14.06	8.67	465.78	465.77
E	337+24.06	8.67	465.88	465.87
℄ Brg. Pier 1	337+30.14	8.67	465.94	465.94
F	337+40.14	8.67	466.03	466.07
G	337+50.14	8.67	466.13	466.21
H	337+60.14	8.67	466.23	466.35
I	337+70.14	8.67	466.32	466.49
J	337+80.14	8.67	466.42	466.59
K	337+90.14	8.67	466.52	466.68
L	338+00.14	8.67	466.61	466.74
M	338+10.14	8.67	466.71	466.79
N	338+20.14	8.67	466.81	466.84
℄ Brg. Pier 2	338+30.14	8.67	466.90	466.90
P	338+40.14	8.67	467.00	466.99
Q	338+50.14	8.67	467.10	467.09
R	338+60.14	8.67	467.20	467.19
S	338+70.14	8.67	467.29	467.29
T	338+80.14	8.67	467.39	467.39
℄ Brg. W. Abut.	338+86.23	8.67	467.45	467.45
Bk. W. Abut.	338+87.64	8.67	467.46	467.46

NOTE

Offsets for Beams 1-7 are measured from the Eastbound PGL. Offsets for the Stage Construction Line and Beams 8-14 are measured from the Westbound PGL.

TOP OF DECK SLAB ELEVATIONS III

U.S. ROUTE 24 & IL ROUTE 9 OVER LA MARSH CREEK

STATION 337+89.89 STRUCTURE NO. 072-0228

SHEET NO. S7 OF 39 SHEETS	F.A.P. RTE.	SECTION	COUNTY	TOTAL SHEETS	SHEET NO.
	317	45BR-2	PEORIA	122	55
			CONTRACT NO. 68719		
	10-15-10	ILLINOIS	FED. AID PROJECT		

DESIGNED	J.Z.
CHECKED	J.A.Z.
DRAWN	S.R.K.
CHECKED	E.E.J.

GRäEF 8501 W. Higgins Road; Suite 280 Chicago, Illinois 60631 (773) 399-0112

h:\jobs2010\2010301\cad\idot_structural\dgn\009\S07_DECK_ELEVATIONS_III.dgn 10/18/2010

STATE OF ILLINOIS
DEPARTMENT OF TRANSPORTATION

BEAM 6

Location	Station	Offset	Theoretical Grade Elevations	Theoretical Grade Elevations Adjusted For Dead Load Deflection
Bk. E. Abut.	336+76.54	16.00	465.28	465.28
℄ Brg. E. Abut.	336+77.96	16.00	465.29	465.29
A	336+87.96	16.00	465.39	465.39
B	336+97.96	16.00	465.49	465.49
C	337+07.96	16.00	465.59	465.58
D	337+17.96	16.00	465.68	465.67
E	337+27.96	16.00	465.78	465.77
℄ Brg. Pier 1	337+34.04	16.00	465.84	465.84
F	337+44.04	16.00	465.93	465.97
G	337+54.04	16.00	466.03	466.11
H	337+64.04	16.00	466.13	466.26
I	337+74.04	16.00	466.23	466.39
J	337+84.04	16.00	466.32	466.50
K	337+94.04	16.00	466.42	466.58
L	338+04.04	16.00	466.52	466.64
M	338+14.04	16.00	466.61	466.70
N	338+24.04	16.00	466.71	466.74
℄ Brg. Pier 2	338+34.04	16.00	466.81	466.81
P	338+44.04	16.00	466.90	466.89
Q	338+54.04	16.00	467.00	466.99
R	338+64.04	16.00	467.10	467.09
S	338+74.04	16.00	467.19	467.20
T	338+84.04	16.00	467.29	467.29
℄ Brg. W. Abut.	338+90.13	16.00	467.35	467.35
Bk. W. Abut.	338+91.54	16.00	467.36	467.36

BEAM 7

Location	Station	Offset	Theoretical Grade Elevations	Theoretical Grade Elevations Adjusted For Dead Load Deflection
Bk. E. Abut.	336+80.44	23.33	465.17	465.17
℄ Brg. E. Abut.	336+81.86	23.33	465.18	465.18
A	336+91.86	23.33	465.28	465.28
B	337+01.86	23.33	465.37	465.37
C	337+11.86	23.33	465.47	465.46
D	337+21.86	23.33	465.57	465.55
E	337+31.86	23.33	465.66	465.65
℄ Brg. Pier 1	337+37.94	23.33	465.72	465.72
F	337+47.94	23.33	465.82	465.85
G	337+57.94	23.33	465.92	466.00
H	337+67.94	23.33	466.01	466.14
I	337+77.94	23.33	466.11	466.27
J	337+87.94	23.33	466.21	466.38
K	337+97.94	23.33	466.30	466.47
L	338+07.94	23.33	466.40	466.53
M	338+17.94	23.33	466.50	466.58
N	338+27.94	23.33	466.59	466.63
℄ Brg. Pier 2	338+37.94	23.33	466.69	466.69
P	338+47.94	23.33	466.79	466.78
Q	338+57.94	23.33	466.89	466.87
R	338+67.94	23.33	466.98	466.98
S	338+77.94	23.33	467.08	467.08
T	338+87.94	23.33	467.18	467.18
℄ Brg. W. Abut.	338+94.02	23.33	467.24	467.24
Bk. W. Abut.	338+95.44	23.33	467.25	467.25

LONG. BONDED CONSTR. JT. & STAGE CONSTR. LINE

Location	Station	Offset	Theoretical Grade Elevations	Theoretical Grade Elevations Adjusted For Dead Load Deflection
Bk. E. Abut.	336+83.19	-25.50	465.15	465.15
℄ Brg. E. Abut.	336+84.60	-25.50	465.16	465.16
A	336+94.60	-25.50	465.26	465.26
B	337+04.60	-25.50	465.35	465.35
C	337+14.60	-25.50	465.45	465.44
D	337+24.60	-25.50	465.55	465.54
E	337+34.60	-25.50	465.65	465.64
℄ Brg. Pier 1	337+40.69	-25.50	465.70	465.70
F	337+50.69	-25.50	465.80	465.84
G	337+60.69	-25.50	465.90	465.98
H	337+70.69	-25.50	466.00	466.12
I	337+80.69	-25.50	466.09	466.25
J	337+90.69	-25.50	466.19	466.36
K	338+00.69	-25.50	466.29	466.45
L	338+10.69	-25.50	466.38	466.51
M	338+20.69	-25.50	466.48	466.56
N	338+30.69	-25.50	466.58	466.61
℄ Brg. Pier 2	338+40.69	-25.50	466.67	466.67
P	338+50.69	-25.50	466.77	466.76
Q	338+60.69	-25.50	466.87	466.86
R	338+70.69	-25.50	466.96	466.96
S	338+80.69	-25.50	467.06	467.06
T	338+90.69	-25.50	467.16	467.16
℄ Brg. W. Abut.	338+96.77	-25.50	467.22	467.22
Bk. W. Abut.	338+98.19	-25.50	467.23	467.23

NOTE

Offsets for Beams 1-7 are measured from the Eastbound PGL. Offsets for the Stage Construction Line and Beams 8-14 are measured from the Westbound PGL.

TOP OF DECK SLAB ELEVATIONS IV

U.S. ROUTE 24 & IL ROUTE 9 OVER LA MARSH CREEK

STATION 337+89.89 STRUCTURE NO. 072-0228

SHEET NO.	F.A.P. RTE.	SECTION	COUNTY	TOTAL SHEETS	SHEET NO.
S8 OF 39 SHEETS	317	45BR-2	PEORIA	122	56
			CONTRACT NO. 68719		
	10-15-10	ILLINOIS	FED. AID PROJECT		

DESIGNED	J.Z.
CHECKED	J.A.Z.
DRAWN	S.R.K.
CHECKED	E.E.J.

GRAEF 8501 W. Higgins Road; Suite 280 Chicago, Illinois 60631 (773) 399-0112

h:\jobs2010\2010304\cad\dot_structural\dgn\00\S08_DECK_ELEVATIONS_IV.dgn 10/18/2010

STATE OF ILLINOIS
DEPARTMENT OF TRANSPORTATION

BEAM 8

Location	Station	Offset	Theoretical Grade Elevations	Theoretical Grade Elevations Adjusted For Dead Load Deflection
Bk. E. Abut.	336+84.34	-23.33	465.20	465.20
℄ Brg. E. Abut.	336+85.76	-23.33	465.22	465.22
A	336+95.76	-23.33	465.31	465.32
B	337+05.76	-23.33	465.41	465.41
C	337+15.76	-23.33	465.51	465.50
D	337+25.76	-23.33	465.60	465.59
E	337+35.76	-23.33	465.70	465.69
℄ Brg. Pier 1	337+41.84	-23.33	465.76	465.76
F	337+51.84	-23.33	465.86	465.89
G	337+61.84	-23.33	465.95	466.04
H	337+71.84	-23.33	466.05	466.18
I	337+81.84	-23.33	466.15	466.31
J	337+91.84	-23.33	466.25	466.42
K	338+01.84	-23.33	466.34	466.50
L	338+11.84	-23.33	466.44	466.57
M	338+21.84	-23.33	466.54	466.62
N	338+31.84	-23.33	466.63	466.67
℄ Brg. Pier 2	338+41.84	-23.33	466.73	466.73
P	338+51.84	-23.33	466.83	466.81
Q	338+61.84	-23.33	466.92	466.91
R	338+71.84	-23.33	467.02	467.02
S	338+81.84	-23.33	467.12	467.12
T	338+91.84	-23.33	467.21	467.22
℄ Brg. W. Abut.	338+97.92	-23.33	467.27	467.27
Bk. W. Abut.	338+99.34	-23.33	467.29	467.29

BEAM 9

Location	Station	Offset	Theoretical Grade Elevations	Theoretical Grade Elevations Adjusted For Dead Load Deflection
Bk. E. Abut.	336+88.24	-16.00	465.39	465.39
℄ Brg. E. Abut.	336+89.65	-16.00	465.41	465.41
A	336+99.65	-16.00	465.50	465.51
B	337+09.65	-16.00	465.60	465.60
C	337+19.65	-16.00	465.70	465.69
D	337+29.65	-16.00	465.80	465.78
E	337+39.65	-16.00	465.89	465.88
℄ Brg. Pier 1	337+45.74	-16.00	465.95	465.95
F	337+55.74	-16.00	466.05	466.08
G	337+65.74	-16.00	466.15	466.23
H	337+75.74	-16.00	466.24	466.37
I	337+85.74	-16.00	466.34	466.50
J	337+95.74	-16.00	466.44	466.61
K	338+05.74	-16.00	466.53	466.69
L	338+15.74	-16.00	466.63	466.76
M	338+25.74	-16.00	466.73	466.81
N	338+35.74	-16.00	466.82	466.86
℄ Brg. Pier 2	338+45.74	-16.00	466.92	466.92
P	338+55.74	-16.00	467.02	467.00
Q	338+65.74	-16.00	467.11	467.10
R	338+75.74	-16.00	467.21	467.21
S	338+85.74	-16.00	467.31	467.31
T	338+95.74	-16.00	467.40	467.41
℄ Brg. W. Abut.	339+01.82	-16.00	467.46	467.46
Bk. W. Abut.	339+03.24	-16.00	467.48	467.48

BEAM 10

Location	Station	Offset	Theoretical Grade Elevations	Theoretical Grade Elevations Adjusted For Dead Load Deflection
Bk. E. Abut.	336+92.14	-8.67	465.57	465.57
℄ Brg. E. Abut.	336+93.55	-8.67	465.58	465.58
A	337+03.55	-8.67	465.68	465.68
B	337+13.55	-8.67	465.77	465.77
C	337+23.55	-8.67	465.87	465.86
D	337+33.55	-8.67	465.97	465.96
E	337+43.55	-8.67	466.07	466.06
℄ Brg. Pier 1	337+49.64	-8.67	466.12	466.12
F	337+59.64	-8.67	466.22	466.26
G	337+69.64	-8.67	466.32	466.40
H	337+79.64	-8.67	466.42	466.54
I	337+89.64	-8.67	466.51	466.67
J	337+99.64	-8.67	466.61	466.78
K	338+09.64	-8.67	466.71	466.87
L	338+19.64	-8.67	466.80	466.93
M	338+29.64	-8.67	466.90	466.98
N	338+39.64	-8.67	467.00	467.03
℄ Brg. Pier 2	338+49.64	-8.67	467.09	467.09
P	338+59.64	-8.67	467.19	467.18
Q	338+69.64	-8.67	467.29	467.28
R	338+79.64	-8.67	467.38	467.38
S	338+89.64	-8.67	467.48	467.48
T	338+99.64	-8.67	467.58	467.58
℄ Brg. W. Abut.	339+05.72	-8.67	467.64	467.64
Bk. W. Abut.	339+07.14	-8.67	467.65	467.65

NOTE

Offsets for Beams 1-7 are measured from the Eastbound PGL. Offsets for the Stage Construction Line and Beams 8-14 are measured from the Westbound PGL.

DESIGNED	J.Z.
CHECKED	J.A.Z.
DRAWN	S.R.K.
CHECKED	E.E.J.

GRAEF
8501 W. Higgins Road; Suite 280
Chicago, Illinois 60631
(773) 399-0112

TOP OF DECK SLAB ELEVATIONS V

U.S. ROUTE 24 & IL ROUTE 9 OVER LA MARSH CREEK

STATION 337+89.89 STRUCTURE NO. 072-0228

SHEET NO.	F.A.P. RTE.	SECTION	COUNTY	TOTAL SHEETS	SHEET NO.
S9 OF 39 SHEETS	317	45BR-2	PEORIA	122	57
			CONTRACT NO. 68719		
	10-15-10	ILLINOIS	FED. AID PROJECT		

h:\jobs2010\20103014\cad\idot_structural\dgn\00\S09_DECK_ELEVATIONS_V.dgn
10/18/2010

STATE OF ILLINOIS
DEPARTMENT OF TRANSPORTATION

BEAM 11

Location	Station	Offset	Theoretical Grade Elevations	Theoretical Grade Elevations Adjusted For Dead Load Deflection
Bk. E. Abut.	336+96.04	-1.33	465.72	465.72
℄ Brg. E. Abut.	336+97.45	-1.33	465.73	465.73
A	337+07.45	-1.33	465.83	465.83
B	337+17.45	-1.33	465.93	465.93
C	337+27.45	-1.33	466.02	466.02
D	337+37.45	-1.33	466.12	466.11
E	337+47.45	-1.33	466.22	466.21
℄ Brg. Pier 1	337+53.54	-1.33	466.28	466.28
F	337+63.54	-1.33	466.37	466.41
G	337+73.54	-1.33	466.47	466.55
H	337+83.54	-1.33	466.57	466.70
I	337+93.54	-1.33	466.66	466.83
J	338+03.54	-1.33	466.76	466.94
K	338+13.54	-1.33	466.86	467.02
L	338+23.54	-1.33	466.96	467.08
M	338+33.54	-1.33	467.05	467.13
N	338+43.54	-1.33	467.15	467.18
℄ Brg. Pier 2	338+53.54	-1.33	467.25	467.25
P	338+63.54	-1.33	467.34	467.33
Q	338+73.54	-1.33	467.44	467.43
R	338+83.54	-1.33	467.54	467.53
S	338+93.54	-1.33	467.63	467.63
T	339+03.54	-1.33	467.73	467.73
℄ Brg. W. Abut.	339+09.62	-1.33	467.79	467.79
Bk. W. Abut.	339+11.04	-1.33	467.80	467.80

U.S. RTE. 24 & IL RTE. 9 WESTBOUND PGL

Location	Station	Offset	Theoretical Grade Elevations	Theoretical Grade Elevations Adjusted For Dead Load Deflection
Bk. E. Abut.	336+96.75	0.00	465.75	465.75
℄ Brg. E. Abut.	336+98.16	0.00	465.76	465.76
A	337+08.16	0.00	465.86	465.86
B	337+18.16	0.00	465.95	465.95
C	337+28.16	0.00	466.05	466.04
D	337+38.16	0.00	466.15	466.14
E	337+48.16	0.00	466.25	466.24
℄ Brg. Pier 1	337+54.25	0.00	466.30	466.30
F	337+64.25	0.00	466.40	466.44
G	337+74.25	0.00	466.50	466.58
H	337+84.25	0.00	466.60	466.72
I	337+94.25	0.00	466.69	466.85
J	338+04.25	0.00	466.79	466.96
K	338+14.25	0.00	466.89	467.05
L	338+24.25	0.00	466.98	467.11
M	338+34.25	0.00	467.08	467.16
N	338+44.25	0.00	467.18	467.21
℄ Brg. Pier 2	338+54.25	0.00	467.27	467.27
P	338+64.25	0.00	467.37	467.36
Q	338+74.25	0.00	467.47	467.46
R	338+84.25	0.00	467.56	467.56
S	338+94.25	0.00	467.66	467.66
T	339+04.25	0.00	467.76	467.76
℄ Brg. W. Abut.	339+10.33	0.00	467.82	467.82
Bk. W. Abut.	339+11.75	0.00	467.83	467.83

BEAM 12

Location	Station	Offset	Theoretical Grade Elevations	Theoretical Grade Elevations Adjusted For Dead Load Deflection
Bk. E. Abut.	336+99.94	6.00	465.68	465.68
℄ Brg. E. Abut.	337+01.35	6.00	465.70	465.70
A	337+11.35	6.00	465.80	465.80
B	337+21.35	6.00	465.89	465.89
C	337+31.35	6.00	465.99	465.98
D	337+41.35	6.00	466.09	466.07
E	337+51.35	6.00	466.18	466.17
℄ Brg. Pier 1	337+57.44	6.00	466.24	466.24
F	337+67.44	6.00	466.34	466.37
G	337+77.44	6.00	466.44	466.52
H	337+87.44	6.00	466.53	466.66
I	337+97.44	6.00	466.63	466.79
J	338+07.44	6.00	466.73	466.90
K	338+17.44	6.00	466.82	466.99
L	338+27.44	6.00	466.92	467.05
M	338+37.44	6.00	467.02	467.10
N	338+47.44	6.00	467.11	467.15
℄ Brg. Pier 2	338+57.44	6.00	467.21	467.21
P	338+67.44	6.00	467.31	467.29
Q	338+77.44	6.00	467.40	467.39
R	338+87.44	6.00	467.50	467.50
S	338+97.44	6.00	467.60	467.60
T	339+07.44	6.00	467.70	467.70
℄ Brg. W. Abut.	339+13.52	6.00	467.75	467.75
Bk. W. Abut.	339+14.94	6.00	467.77	467.77

NOTE

Offsets for Beams 1-7 are measured from the Eastbound PGL. Offsets for the Stage Construction Line and Beams 8-14 are measured from the Westbound PGL.

DESIGNED	J.Z.
CHECKED	J.A.Z.
DRAWN	S.R.K.
CHECKED	E.E.J.

GRAEF 8501 W. Higgins Road; Suite 280
Chicago, Illinois 60631
(773) 399-0112

TOP OF DECK SLAB ELEVATIONS VI

U.S. ROUTE 24 & IL ROUTE 9 OVER LA MARSH CREEK

STATION 337+89.89 STRUCTURE NO. 072-0228

SHEET NO. S10 OF 39 SHEETS	F.A.P. RTE.	SECTION	COUNTY	TOTAL SHEETS	SHEET NO.
	317	45BR-2	PEORIA	122	58
			CONTRACT NO. 68719		
	10-15-10		ILLINOIS	FED. AID PROJECT	

h:\jobs2010\2010314\cad\idot_structural\dgn\000\S10_DECK_ELEVATIONS_VI.dgn
10/18/2010

STATE OF ILLINOIS
DEPARTMENT OF TRANSPORTATION

BEAM 13

Location	Station	Offset	Theoretical Grade Elevations	Theoretical Grade Elevations Adjusted For Dead Load Deflection
Bk. E. Abut.	337+03.84	13.33	465.60	465.60
℄ Brg. E. Abut.	337+05.25	13.33	465.61	465.61
A	337+15.25	13.33	465.71	465.71
B	337+25.25	13.33	465.81	465.81
C	337+35.25	13.33	465.91	465.90
D	337+45.25	13.33	466.00	465.99
E	337+55.25	13.33	466.10	466.09
℄ Brg. Pier 1	337+61.34	13.33	466.16	466.16
F	337+71.34	13.33	466.25	466.29
G	337+81.34	13.33	466.35	466.43
H	337+91.34	13.33	466.45	466.58
I	338+01.34	13.33	466.55	466.71
J	338+11.34	13.33	466.64	466.82
K	338+21.34	13.33	466.74	466.90
L	338+31.34	13.33	466.84	466.96
M	338+41.34	13.33	466.93	467.02
N	338+51.34	13.33	467.03	467.06
℄ Brg. Pier 2	338+61.34	13.33	467.13	467.13
P	338+71.34	13.33	467.22	467.21
Q	338+81.34	13.33	467.32	467.31
R	338+91.34	13.33	467.42	467.41
S	339+01.34	13.33	467.51	467.52
T	339+11.34	13.33	467.61	467.61
℄ Brg. W. Abut.	339+17.42	13.33	467.67	467.67
Bk. W. Abut.	339+18.84	13.33	467.68	467.68

BEAM 14

Location	Station	Offset	Theoretical Grade Elevations	Theoretical Grade Elevations Adjusted For Dead Load Deflection
Bk. E. Abut.	337+07.73	20.67	465.49	465.49
℄ Brg. E. Abut.	337+09.15	20.67	465.50	465.50
A	337+19.15	20.67	465.60	465.60
B	337+29.15	20.67	465.69	465.69
C	337+39.15	20.67	465.79	465.78
D	337+49.15	20.67	465.89	465.87
E	337+59.15	20.67	465.98	465.97
℄ Brg. Pier 1	337+65.23	20.67	466.04	466.04
F	337+75.23	20.67	466.14	466.17
G	337+85.23	20.67	466.24	466.32
H	337+95.23	20.67	466.33	466.46
I	338+05.23	20.67	466.43	466.59
J	338+15.23	20.67	466.53	466.70
K	338+25.23	20.67	466.62	466.78
L	338+35.23	20.67	466.72	466.85
M	338+45.23	20.67	466.82	466.90
N	338+55.23	20.67	466.92	466.95
℄ Brg. Pier 2	338+65.23	20.67	467.01	467.01
P	338+75.23	20.67	467.11	467.10
Q	338+85.23	20.67	467.21	467.19
R	338+95.23	20.67	467.30	467.30
S	339+05.23	20.67	467.40	467.40
T	339+15.23	20.67	467.50	467.50
℄ Brg. W. Abut.	339+21.32	20.67	467.56	467.56
Bk. W. Abut.	339+22.73	20.67	467.57	467.57

NOTE

Offsets for Beams 1-7 are measured from the Eastbound PGL. Offsets for the Stage Construction Line and Beams 8-14 are measured from the Westbound PGL.

DESIGNED	J.Z.
CHECKED	J.A.Z.
DRAWN	S.R.K.
CHECKED	E.E.J.

GRAEF 8501 W. Higgins Road; Suite 280 Chicago, Illinois 60631 (773) 399-0112

TOP OF DECK SLAB ELEVATIONS VII

U.S. ROUTE 24 & IL ROUTE 9 OVER LA MARSH CREEK

STATION 337+89.89 STRUCTURE NO. 072-0228

SHEET NO. S11 OF 39 SHEETS	F.A.P. RTE.	SECTION	COUNTY	TOTAL SHEETS	SHEET NO.
	317	45BR-2	PEORIA	122	59
			CONTRACT NO. 68719		
	10-15-10	ILLINOIS	FED. AID PROJECT		

h:\jobs2010\2010301\cad\dot_structural\dgn\00\S11_DECK_ELEVATIONS_VII.dgn
10/15/2010

STATE OF ILLINOIS
DEPARTMENT OF TRANSPORTATION

SOUTH EDGE OF SHOULDER

Location	Station	Offset	Theoretical Grade Elevations
End of E. Appr. Slab	336+26.11	-22.42	464.66
A_1	336+36.11	-22.42	464.76
A_2	336+46.33	-22.00	464.86
Bk. E. Abut.	336+56.33	-22.00	464.96

SOUTH EDGE OF PAVEMENT

Location	Station	Offset	Theoretical Grade Elevations
End of E. Appr. Slab	336+31.65	-12.00	464.93
A_1	336+41.65	-12.00	465.03
A_2	336+51.65	-12.00	465.12
Bk. E. Abut.	336+61.65	-12.00	465.22

PGL & ℄ EASTBOUND, U.S. RTE. 24 & IL RTE. 9 PGL

Location	Station	Offset	Theoretical Grade Elevations
End of E. Appr. Slab	336+38.03	0.00	465.18
A_1	336+48.03	0.00	465.28
A_2	336+58.03	0.00	465.37
Bk. E. Abut.	336+68.03	0.00	465.47

SOUTH MEDIAN CURB LINE

Location	Station	Offset	Theoretical Grade Elevations
End of E. Appr. Slab	336+51.32	25.00	464.85
A_1	336+61.32	25.00	464.95
A_2	336+71.32	25.00	465.04
Bk. E. Abut.	336+81.32	25.00	465.14

LONG. BONDED CONSTR. JOINT & STAGE CONSTRUCTION LINE

Location	Station	Offset	Theoretical Grade Elevations
End of E. Appr. Slab	336+53.19	-25.50	464.86
A_1	336+63.19	-25.50	464.95
A_2	336+73.19	-25.50	465.05
Bk. E. Abut.	336+83.19	-25.50	465.15

NORTH MEDIAN CURB LINE

Location	Station	Offset	Theoretical Grade Elevations
End of E. Appr. Slab	336+58.44	-15.63	465.11
A_1	336+67.94	-16.57	465.19
A_2	336+77.43	-17.52	465.26
Bk. E. Abut.	336+86.93	-18.47	465.33

PGL & ℄ WESTBOUND, U.S. RTE. 24 & IL RTE. 9 PGL

Location	Station	Offset	Theoretical Grade Elevations
End of E. Appr. Slab	336+66.75	0.00	465.46
A_1	336+76.75	0.00	465.55
A_2	336+86.75	0.00	465.65
Bk. E. Abut.	336+96.75	0.00	465.75

NORTH EDGE OF PAVEMENT

Location	Station	Offset	Theoretical Grade Elevations
End of E. Appr. Slab	336+73.13	12.00	465.33
A_1	336+83.13	12.00	465.43
A_2	336+93.13	12.00	465.52
Bk. E. Abut.	337+03.13	12.00	465.62

NORTH EDGE OF SHOULDER

Location	Station	Offset	Theoretical Grade Elevations
End of E. Appr. Slab	336+78.67	22.42	465.17
A_1	336+88.67	22.42	465.26
A_2	336+98.45	22.00	465.37
Bk. E. Abut.	337+08.45	22.00	465.46

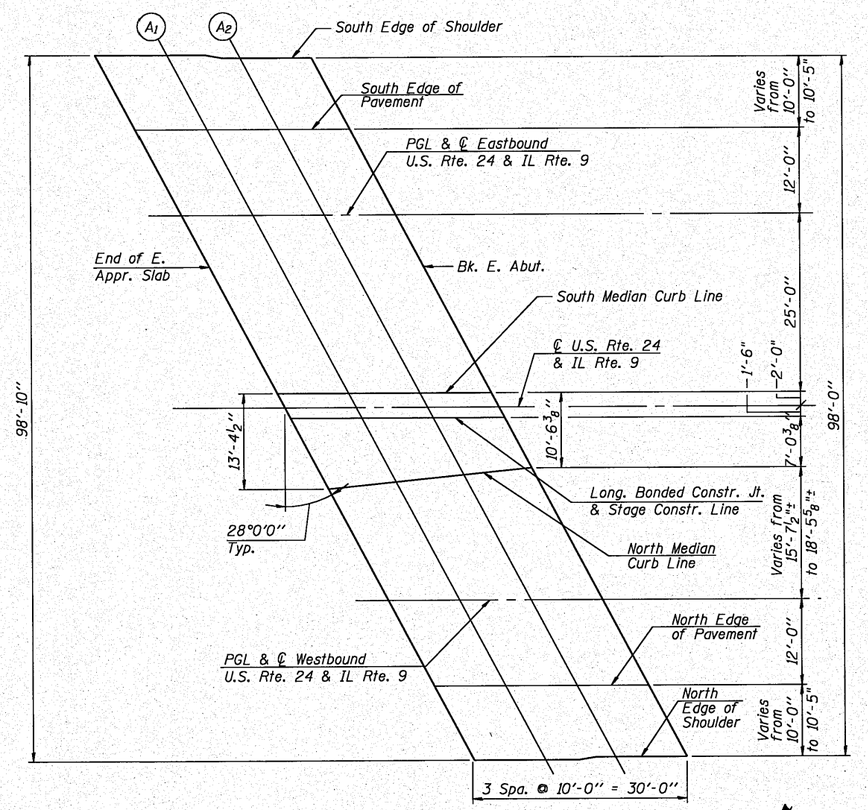

PLAN

TOP OF EAST APPROACH SLAB ELEVATIONS
U.S. ROUTE 24 & IL ROUTE 9 OVER LA MARSH CREEK
STATION 337+89.89 STRUCTURE NO. 072-0228

SHEET NO. S12 OF 39 SHEETS	F.A.P. RTE.	SECTION	COUNTY	TOTAL SHEETS	SHEET NO.
	317	45BR-2	PEORIA	122	60
			CONTRACT NO. 68719		
	10-15-10	ILLINOIS	FED. AID PROJECT		

GRAEF 8501 W. Higgins Road; Suite 280 Chicago, Illinois 60631 (773) 399-0112

DESIGNED	J.A.Z.
CHECKED	J.A.Z.
DRAWN	S.R.K.
CHECKED	E.E.J.

h:\jobs2010\2010304\cad\idot_structural\dgn\100\S12_APPR_ELEVATIONS_I.dgn
10/19/2010

STATE OF ILLINOIS
DEPARTMENT OF TRANSPORTATION

SOUTH EDGE OF SHOULDER

Location	Station	Offset	Theoretical Grade Elevations
Bk. W. Abut.	338+71.33	-22.00	467.04
A_3	338+81.33	-22.00	467.14
A_4	338+91.11	-22.42	467.23
End of W. Appr. Slab	339+01.11	-22.42	467.32

SOUTH EDGE OF PAVEMENT

Location	Station	Offset	Theoretical Grade Elevations
Bk. W. Abut.	338+76.65	-12.00	467.30
A_3	338+86.65	-12.00	467.40
A_4	338+96.65	-12.00	467.50
End of W. Appr. Slab	339+06.65	-12.00	467.59

PGL & ℄ EASTBOUND, U.S. RTE. 24 & IL RTE. 9 PGL

Location	Station	Offset	Theoretical Grade Elevations
Bk. W. Abut.	338+83.03	0.00	467.55
A_3	338+93.03	0.00	467.65
A_4	339+03.03	0.00	467.75
End of W. Appr. Slab	339+13.03	0.00	467.84

SOUTH MEDIAN CURB LINE

Location	Station	Offset	Theoretical Grade Elevations
Bk. W. Abut.	338+96.32	25.00	467.22
A_3	339+06.32	25.00	467.32
A_4	339+16.32	25.00	467.42
End of W. Appr. Slab	339+26.32	25.00	467.51

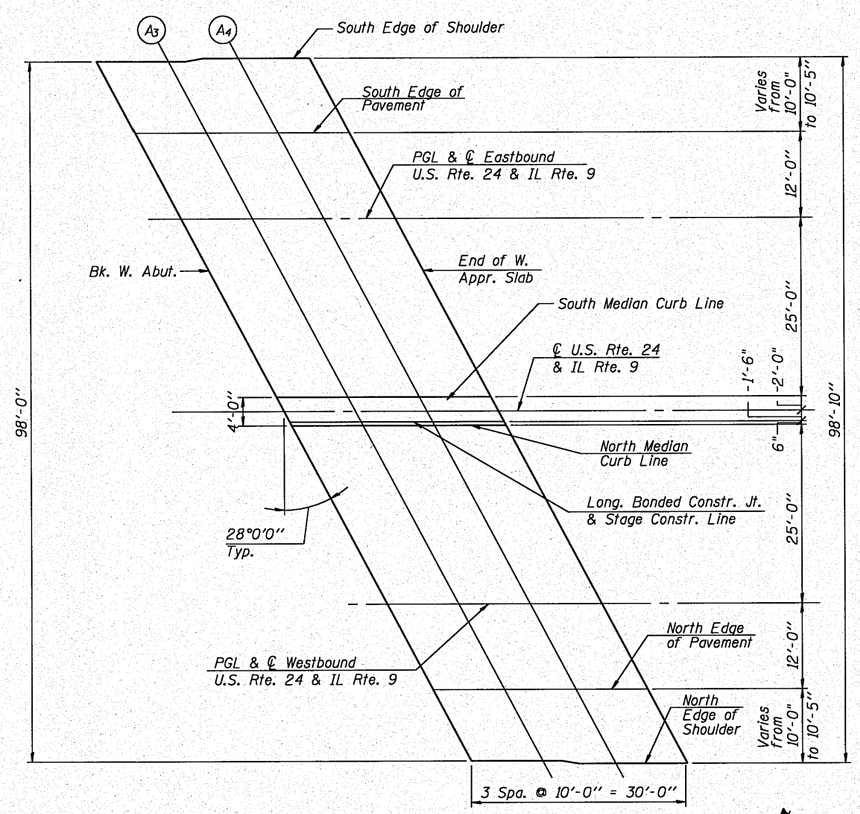

PLAN

LONG. BONDED CONSTR. JOINT & STAGE CONSTRUCTION LINE

Location	Station	Offset	Theoretical Grade Elevations
Bk. W. Abut.	338+98.19	-25.50	467.23
A_3	339+08.19	-25.50	467.33
A_4	339+18.19	-25.50	467.42
End of W. Appr. Slab	339+28.19	-25.50	467.52

NORTH MEDIAN CURB LINE

Location	Station	Offset	Theoretical Grade Elevations
Bk. W. Abut.	338+98.46	-25.00	467.24
A_3	339+08.46	-25.00	467.34
A_4	339+18.46	-25.00	467.44
End of W. Appr. Slab	339+28.46	-25.00	467.53

PGL & ℄ WESTBOUND, U.S. RTE. 24 & IL RTE. 9 PGL

Location	Station	Offset	Theoretical Grade Elevations
Bk. W. Abut.	339+11.75	0.00	467.83
A_3	339+21.75	0.00	467.93
A_4	339+31.75	0.00	468.02
End of W. Appr. Slab	339+41.75	0.00	468.12

NORTH EDGE OF PAVEMENT

Location	Station	Offset	Theoretical Grade Elevations
Bk. W. Abut.	339+18.13	12.00	467.71
A_3	339+28.13	12.00	467.80
A_4	339+38.13	12.00	467.90
End of W. Appr. Slab	339+48.13	12.00	468.00

NORTH EDGE OF SHOULDER

Location	Station	Offset	Theoretical Grade Elevations
Bk. W. Abut.	339+23.45	22.00	467.55
A_3	339+33.45	22.00	467.65
A_4	339+43.67	22.42	467.74
End of W. Appr. Slab	339+53.67	22.42	467.83

DESIGNED	J.Z.
CHECKED	J.A.Z.
DRAWN	S.R.K.
CHECKED	E.E.J.

h:\jobs2010\2010304\cad\idot_structural\dgn\00\S13_APPR_ELEVATIONS_II.dgn
10/18/2010

GRAEF
8501 W. Higgins Road; Suite 280
Chicago, Illinois 60631
(773) 399-0112

TOP OF WEST APPROACH SLAB ELEVATIONS
U.S. ROUTE 24 & IL ROUTE 9 OVER LA MARSH CREEK
STATION 337+89.89 STRUCTURE NO. 072-0228

SHEET NO. S13 OF 39 SHEETS	F.A.P. RTE.	SECTION	COUNTY	TOTAL SHEETS	SHEET NO.
	317	45BR-2	PEORIA	122	61
			CONTRACT NO. 68719		
	10-15-10	ILLINOIS	FED. AID PROJECT		

STATE OF ILLINOIS
DEPARTMENT OF TRANSPORTATION

*Order $a(E)$ & $a_2(E)$ bars full length. Cut to fit skew and use remainder of bars in opposite end.

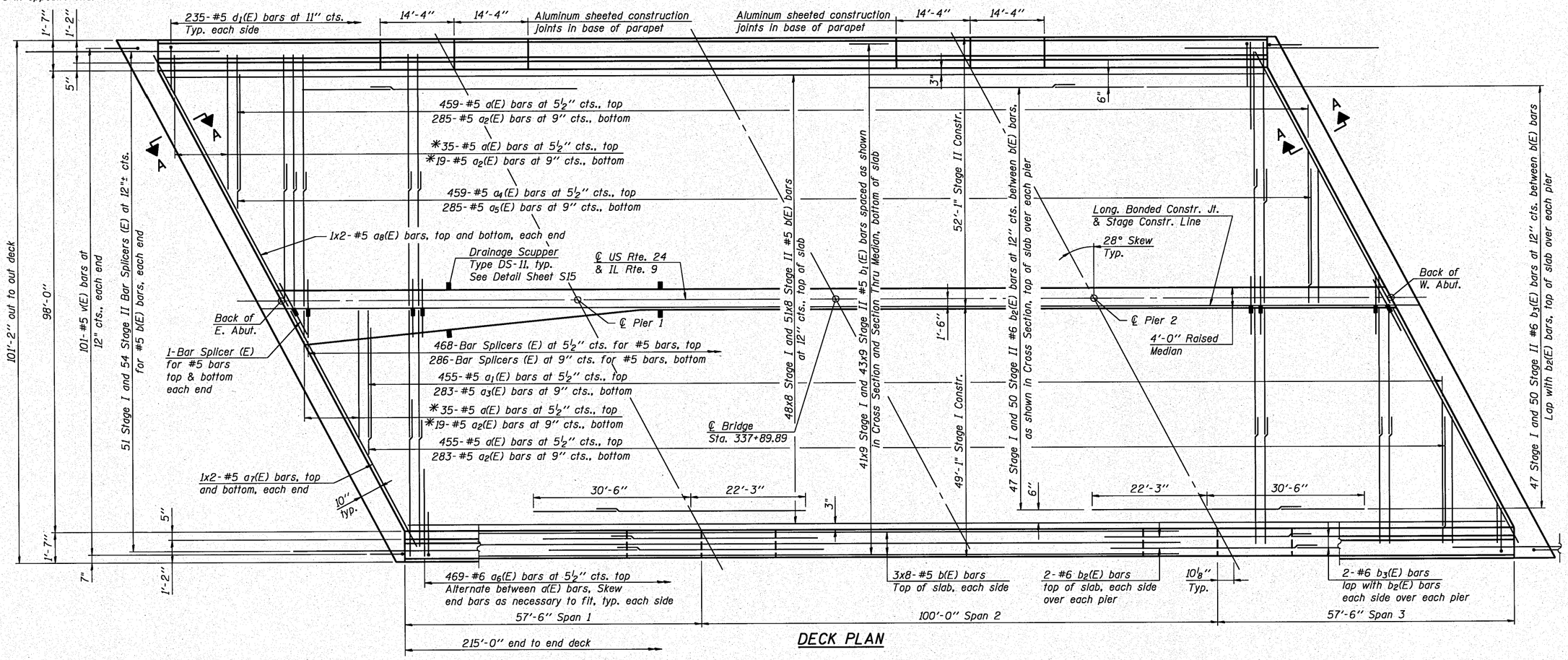

DECK PLAN

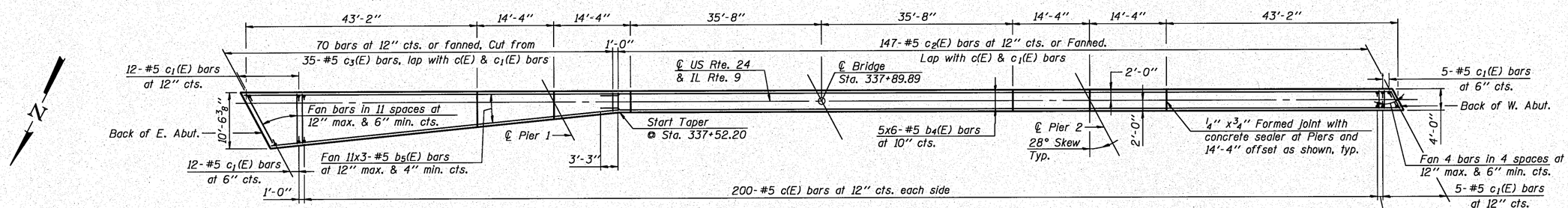

RAISED MEDIAN PLAN

MINIMUM BAR LAP

#5 bar = 3'-3"
#6 bar = 3'-1"

NOTES

1. See Sheets S15 & S16 of 39 for deck details, parapet reinforcement, and Bill of Material.
2. Bars indicated thus 20 x 3-#5 etc. indicates 20 lines of bars with 3 lengths per line.
3. See Sheet S3 of 39 for Construction Staging.
4. See Sheet S17 of 39 for Section A-A.

GRAEF 8501 W. Higgins Road; Suite 280 Chicago, Illinois 60631 (773) 399-0112

DESIGNED	E.E.J.
CHECKED	J.J.G.
DRAWN	E.E.J.
CHECKED	J.J.G.

h:\jobs2010\2010314\cad\dot_structural\dgn\00\S14_DECK_PLAN.dgn
10/18/2010

DECK PLAN

U.S. ROUTE 24 & IL ROUTE 9 OVER LA MARSH CREEK

STATION 337+89.89 STRUCTURE NO. 072-0228

SHEET NO. S14 OF 39 SHEETS	F.A.P. RTE.	SECTION	COUNTY	TOTAL SHEETS	SHEET NO.
	317	45BR-2	PEORIA	122	62
			CONTRACT NO. 68719		
	10-15-10	ILLINOIS	FED. AID PROJECT		

STATE OF ILLINOIS
DEPARTMENT OF TRANSPORTATION

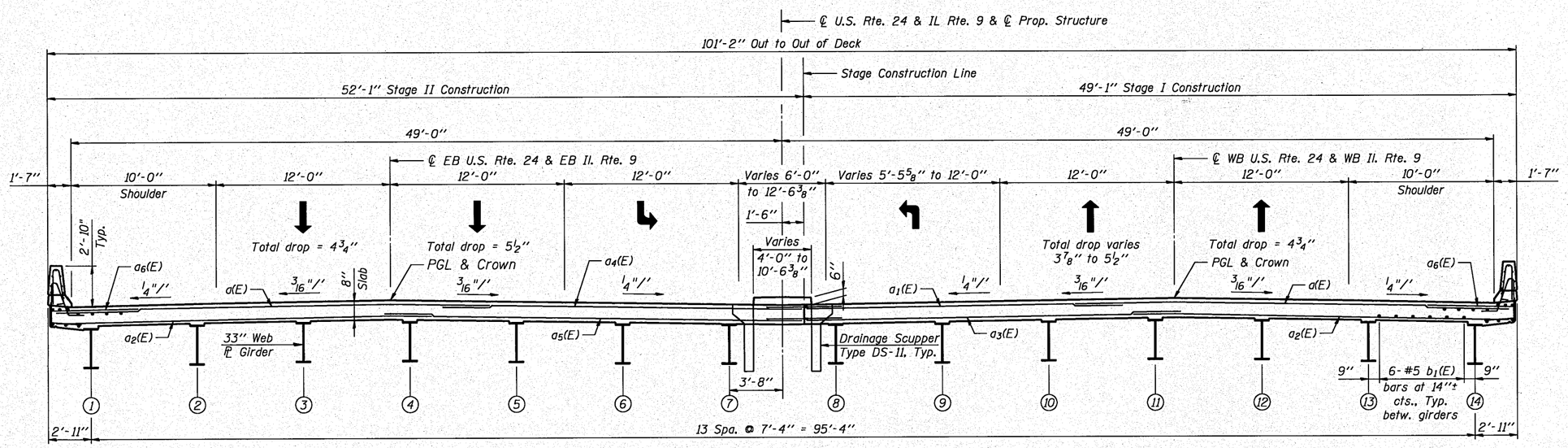

CROSS SECTION

(Looking West)

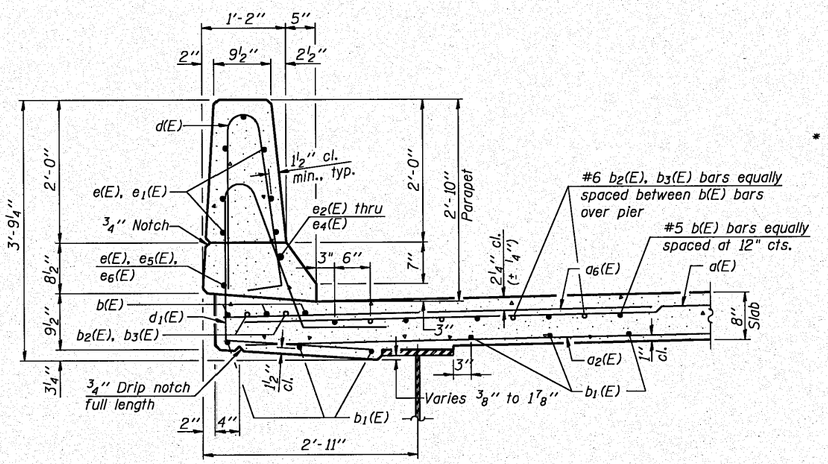

SECTION THRU PARAPET

* The cost of expansion anchors/inserts is included in the cost of Reinforcement Bars, Epoxy Coated.

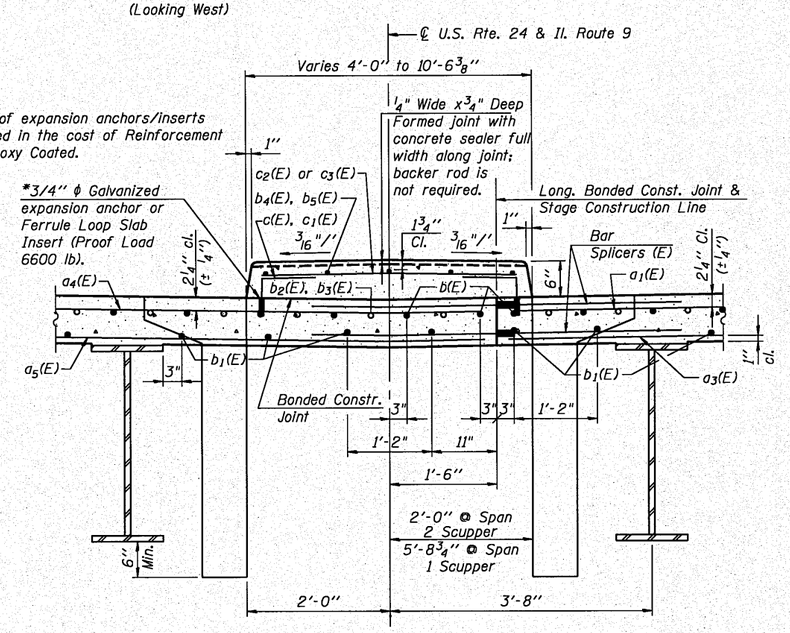

SECTION THRU MEDIAN

(Looking West)

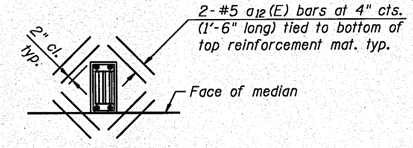

DETAIL AT SCUPPER

(See Note 3)

MINIMUM BAR LAP

#5 bar = 3'-3"
#6 bar = 3'-1"

NOTES

1. See Sheet S16 of 39 for deck details, parapet reinforcement, and Bill of Material.
2. The raised Median is to be constructed in Stage III. See Sheet S3 of 39 for Construction Staging.
3. Cut longitudinal reinforcement to clear drainage scuppers.

DESIGNED	E.E.J.
CHECKED	J.J.G.
DRAWN	E.E.J.
CHECKED	J.J.G.

GRAEF 8501 W. Higgins Road; Suite 280 Chicago, Illinois 60631 (773) 399-0112

DECK CROSS SECTION

U.S. ROUTE 24 & IL ROUTE 9 OVER LA MARSH CREEK

STATION 337+89.89 STRUCTURE NO. 072-0228

SHEET NO. S15 OF 39 SHEETS	F.A.P. RTE.	SECTION	COUNTY	TOTAL SHEETS	SHEET NO.
	317	45BR-2	PEORIA	122	63
			CONTRACT NO. 68719		
	10-15-10	ILLINOIS	FED. AID PROJECT		

h:\jobs2010\2010030014\cad\idot_structural\dgn\00\S15_DECK_CROSS_SECTION.dgn
10/18/2010

STATE OF ILLINOIS
DEPARTMENT OF TRANSPORTATION

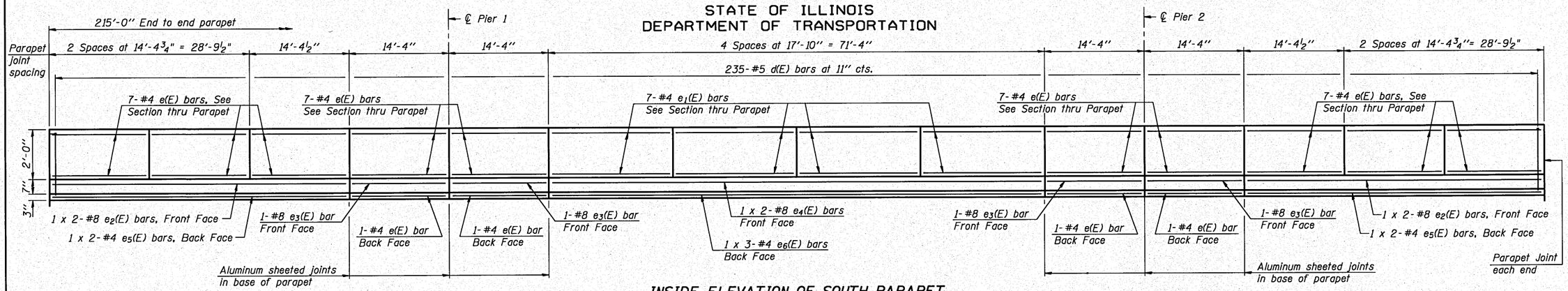

INSIDE ELEVATION OF SOUTH PARAPET
REFLECTED INSIDE ELEVATION OF NORTH PARAPET

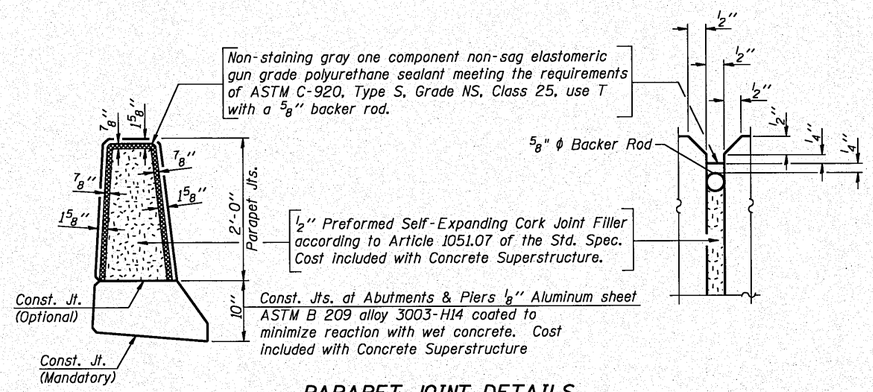

PARAPET JOINT DETAILS

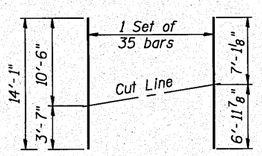

BAR c3(E) CUTTING DIAGRAM

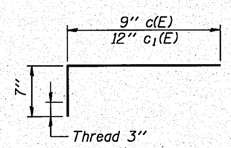

BARS c(E) & c1(E)

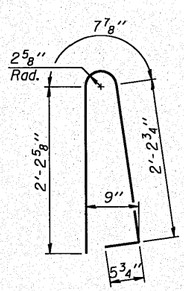

BAR d(E)

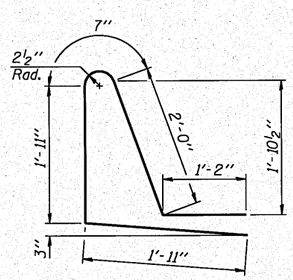

BAR d1(E)

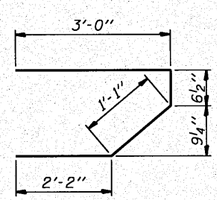

BAR s(E)

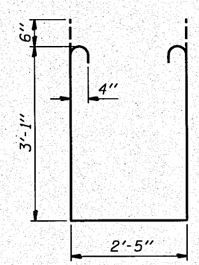

BAR s1(E)

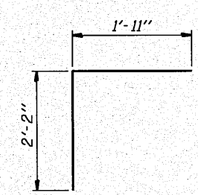

BAR v(E)

SUPERSTRUCTURE BILL OF MATERIAL

Bar	No.	Size	Length	Shape
a(E)	984	#5	30'-0"	
a1(E)	455	#5	22'-0"	
a2(E)	606	#5	26'-0"	
a3(E)	283	#5	25'-9"	
a4(E)	459	#5	25'-0"	
a5(E)	285	#5	28'-9"	
a6(E)	938	#6	6'-6"	
a7(E)	8	#5	29'-2"	
a8(E)	8	#5	30'-11"	
a12(E)	32	#5	1'-6"	
b(E)	840	#5	29'-8"	
b1(E)	756	#5	26'-9"	
b2(E)	202	#6	40'-0"	
b3(E)	202	#6	16'-0"	
b4(E)	30	#5	27'-6"	
b5(E)	33	#5	25'-9"	
c(E)	400	#5	1'-4"	
c1(E)	34	#5	1'-7"	
c2(E)	147	#5	3'-6"	
c3(E)	35	#5	14'-1"	
d(E)	470	#5	5'-7"	
d1(E)	470	#5	7'-7"	
e(E)	148	#4	14'-1"	
e1(E)	56	#4	17'-6"	
e2(E)	8	#8	24'-2"	
e3(E)	8	#8	14'-1"	
e4(E)	4	#8	38'-2"	
e5(E)	8	#4	22'-6"	
e6(E)	6	#4	25'-1"	
m(E)	20	#6	29'-4"	
m1(E)	20	#6	31'-0"	
m2(E)	44	#6	11'-8"	
m3(E)	12	#6	9'-0"	
m4(E)	24	#6	8'-0"	
m5(E)	4	#6	3'-0"	
m6(E)	2	#6	5'-6"	

Bar	No.	Size	Length	Shape
s(E)	220	#5	6'-10"	
s1(E)	194	#4	9'-7"	
v(E)	202	#5	4'-1"	
Concrete Superstructure			Cu. Yd.	709.8
Bridge Deck Grooving			Sq. Yd.	2,124
Protective Coat			Sq. Yd.	2,545
Reinforcement Bars, Epoxy Coated			Pound	179,660
Bar Splicers			Each	984

NOTES

1. Bars indicated thus 1 x 3-#5 etc. indicates 1 line of bars with 3 lengths per line.
2. Work this sheet with Sheets S14 & S15 of 39.

MINIMUM BAR LAP
(Parapet)
#4 bar = 2'-1"
#8 bar = 5'-5"

DESIGNED	E.E.J.
CHECKED	J.J.G.
DRAWN	E.E.J.
CHECKED	J.J.G.

h:\jobs2010\2010314\cad\dot_structural\dgn\00\S16_DECK_DETAILS.dgn
10/18/2010

GRAEF 8501 W. Higgins Road; Suite 280 Chicago, Illinois 60631 (773) 399-0112

DECK DETAILS
U.S. ROUTE 24 & IL ROUTE 9 OVER LA MARSH CREEK
STATION 337+89.89 STRUCTURE NO. 072-0228

SHEET NO. S16 OF 39 SHEETS	F.A.P. RTE.	SECTION	COUNTY	TOTAL SHEETS	SHEET NO.
	317	45BR-2	PEORIA	122	64
			CONTRACT NO. 68719		
	10-15-10	ILLINOIS	FED. AID PROJECT		

STATE OF ILLINOIS
DEPARTMENT OF TRANSPORTATION

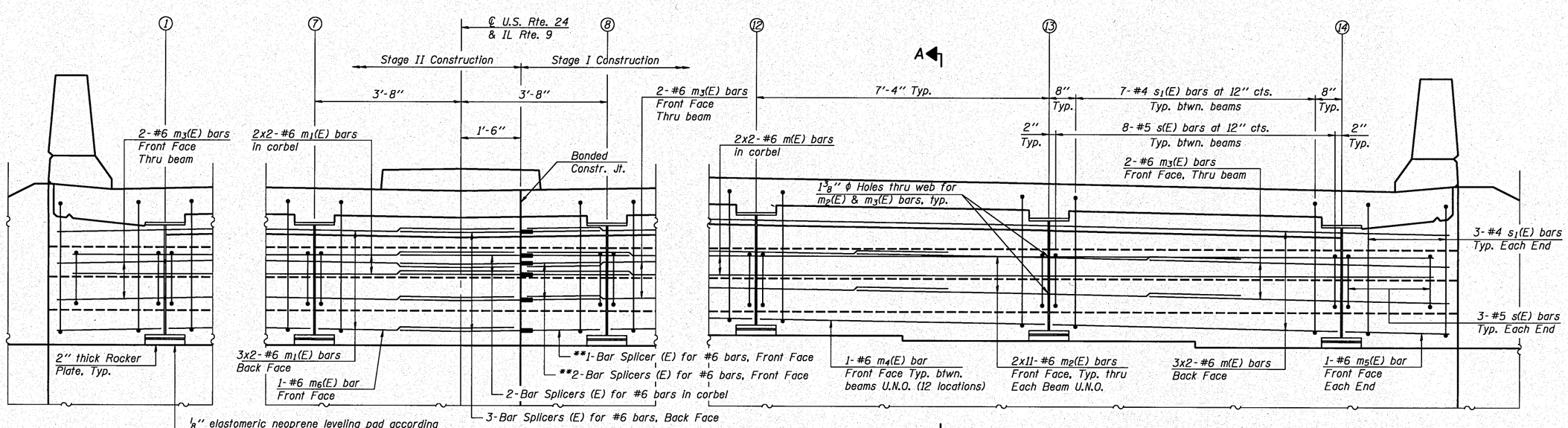

**Cut to fit in Stage I Construction as necessary.

DIAPHRAGM ELEVATION AT WEST ABUTMENT

(Looking West)
(West Abut. Shown, East Abut. similar, opp. hand)
(Dimensions at right angles to ℄ U.S. Rte. 24)

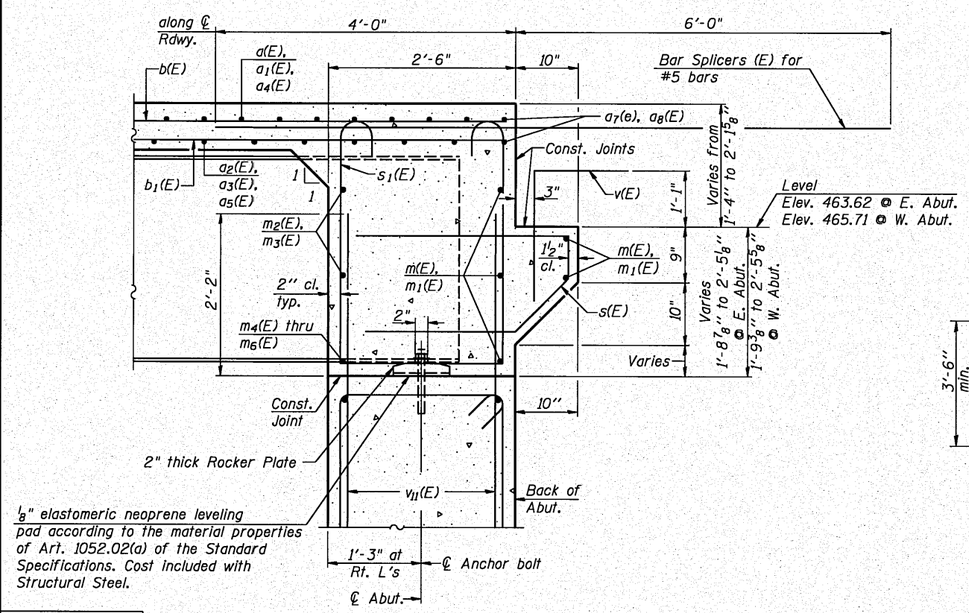

SECTION A-A

Dimensions at right angles to abutment, except as shown.

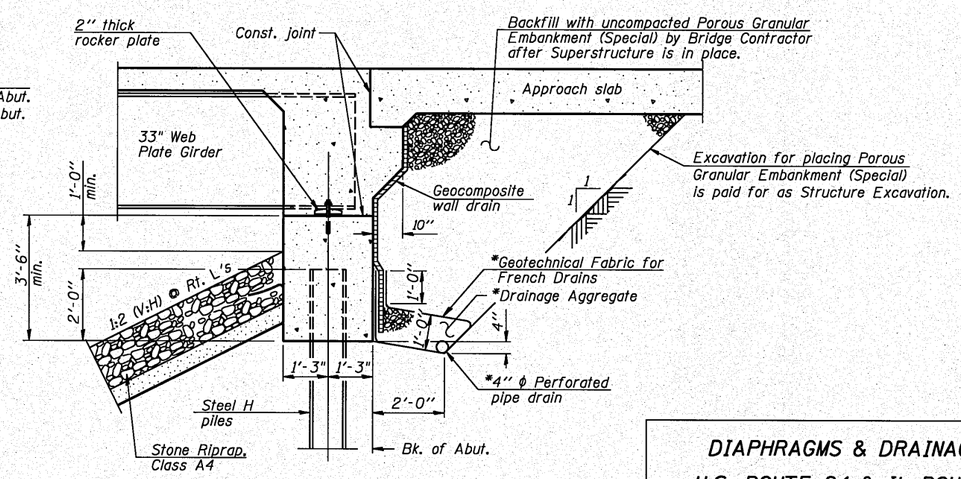

SECTION THRU ABUTMENT

(Horiz. dim. @ Rt. L's)

*Included in the cost of Pipe Underdrains for Structures.

NOTES

1. Reinforcement bars in diaphragm are billed with superstructure on sheet S16 of 39.
2. Concrete in diaphragm is included with Concrete Superstructure on sheet S16 of 39.
3. For details of bars s(E) & s1(E) see sheet S16 of 39.
4. The s(E) and s1(E) bars shall be placed parallel to the girders. Spacing for these bars shall be at right angles to the beams.
5. All drainage system components shall extend to 2'-0" from the end of each wingwall except an outlet pipe shall extend until intersecting with the side slopes. The pipes shall drain into concrete headwalls. (See Article 601.05 of the Standard Specifications and Highway Standard 601101)
6. West Abutment Diaphragm Elevation is shown. East Abutment is similar opposite hand.
7. Bars indicated thus 20x3-#5 etc. indicates 20 lines of bars with 3 lengths per line.

MIN. BAR LAP

#6 bar = 3'-4"

DESIGNED	E.E.J.
CHECKED	J.A.Z.
DRAWN	E.E.J.
CHECKED	J.A.Z.

GRAEF 8501 W. Higgins Road; Suite 280 Chicago, Illinois 60631 (773) 399-0112

DIAPHRAGMS & DRAINAGE DETAILS AT ABUTMENTS

U.S. ROUTE 24 & IL ROUTE 9 OVER LA MARSH CREEK

STATION 337+89.89 STRUCTURE NO. 072-0228

SHEET NO. S17 OF 39 SHEETS	F.A.P. RTE.	SECTION	COUNTY	TOTAL SHEETS	SHEET NO.
	317	45BR-2	PEORIA	122	65
			CONTRACT NO. 68719		
	10-15-10	ILLINOIS	FED. AID PROJECT		

h:\jobs2010\2010301A\cad\idot_structural\dgn\GD\S17_DPHMS_&_DRAINAGE.dgn
10/15/2010

STATE OF ILLINOIS
DEPARTMENT OF TRANSPORTATION

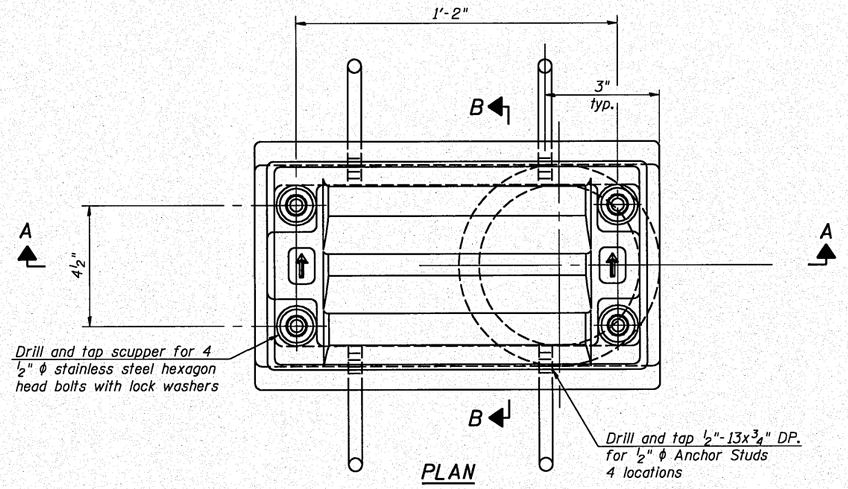

PLAN

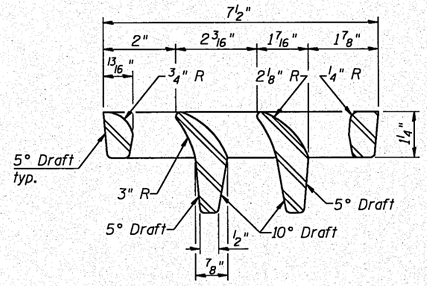

VANE GRATE DETAIL

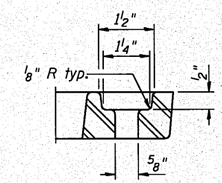

BOLT HOLE DETAIL

Notes:

All cast iron parts shall be gray iron conforming to the requirements of AASHTO M 105, Class 35B.

Bolts, anchor studs, washers and nuts shall conform to the requirements of ASTM A 307 and shall be galvanized according to AASHTO M 232.

Downspouts located on the exterior side of a painted steel fascia beam shall be painted with the finish coat specified for the exterior side of the fascia beam.

As an alternate, bolts, anchor studs, washers and nuts may be stainless steel according to Article 1006.29(d) of the Standard Specifications.

Structural steel weldments of equal sections and of the same configuration may be substituted for the cast iron scupper frame. Fillet or full penetration welds shall be used for the weldments. Details shall be submitted to the Engineer for approval. Structural steel weldments shall not be substituted for the cast iron scupper grate. Structural steel frames and downspouts shall be galvanized according to AASHTO M111.

The Contractor shall take appropriate measures to assure that Protective Coat is not applied to the scupper.

Cost of the Grate, Frame, Downspout, Anchor Studs, Bolts, Washers and Nuts including complete installation of the scupper shall be paid for at the contract unit price each for Drainage Scupper, DS-11.

Alternate fiberglass downspout conforming to ASTM D 2996 with a short-time rupture strength hoop tensile stress of 30,000 psi min. may be used in lieu of the cast iron or steel equivalent.

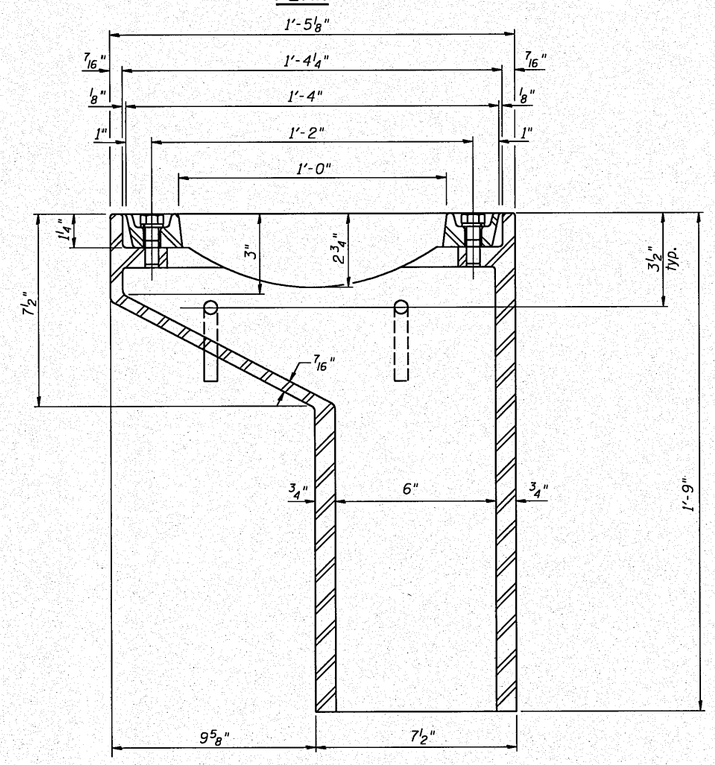

SECTION A-A

See sheet S15 of 39 for scupper location relative to median.

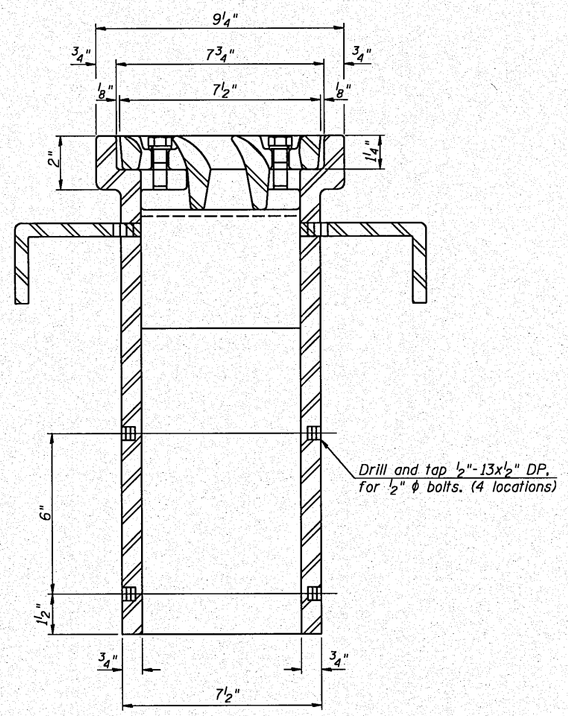

SECTION B-B

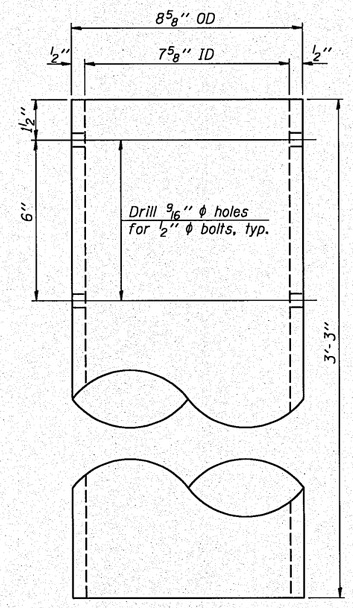

DOWNSPOUT

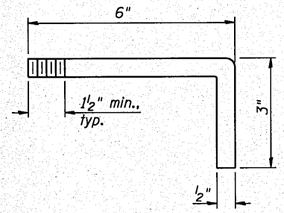

ANCHOR STUD DETAIL

BILL OF MATERIAL

ITEM	UNIT	QUANTITY
Drainage Scuppers, DS-11	Each	4

DRAINAGE SCUPPER DETAILS

U.S. ROUTE 24 & IL ROUTE 9 OVER LA MARSH CREEK

STATION 337+89.89 STRUCTURE NO. 072-0228

SHEET NO. S18 OF 39 SHEETS	F.A.P. RTE.	SECTION	COUNTY	TOTAL SHEETS	SHEET NO.
	317	45BR-2	PEORIA	122	66
			CONTRACT NO. 68719		
	10-15-10	ILLINOIS	FED. AID PROJECT		

DESIGNED	E.E.J.
CHECKED	J.A.Z.
DRAWN	E.E.J.
CHECKED	J.A.Z.

DS-11 11-1-09

GRAEF 8501 W. Higgins Road; Suite 280 Chicago, Illinois 60631 (773) 399-0112

h:\jobs2010\2010301\4\cad\dot_structural\dgn\00\S18_DRAINAGE_DETAILS.dgn 10/18/2010

STATE OF ILLINOIS
DEPARTMENT OF TRANSPORTATION

* Tilt #9 $b_7(E)$ bars as required to maintain clearance.
** Space between $a_{11}(E)$ bars, typ. each parapet.

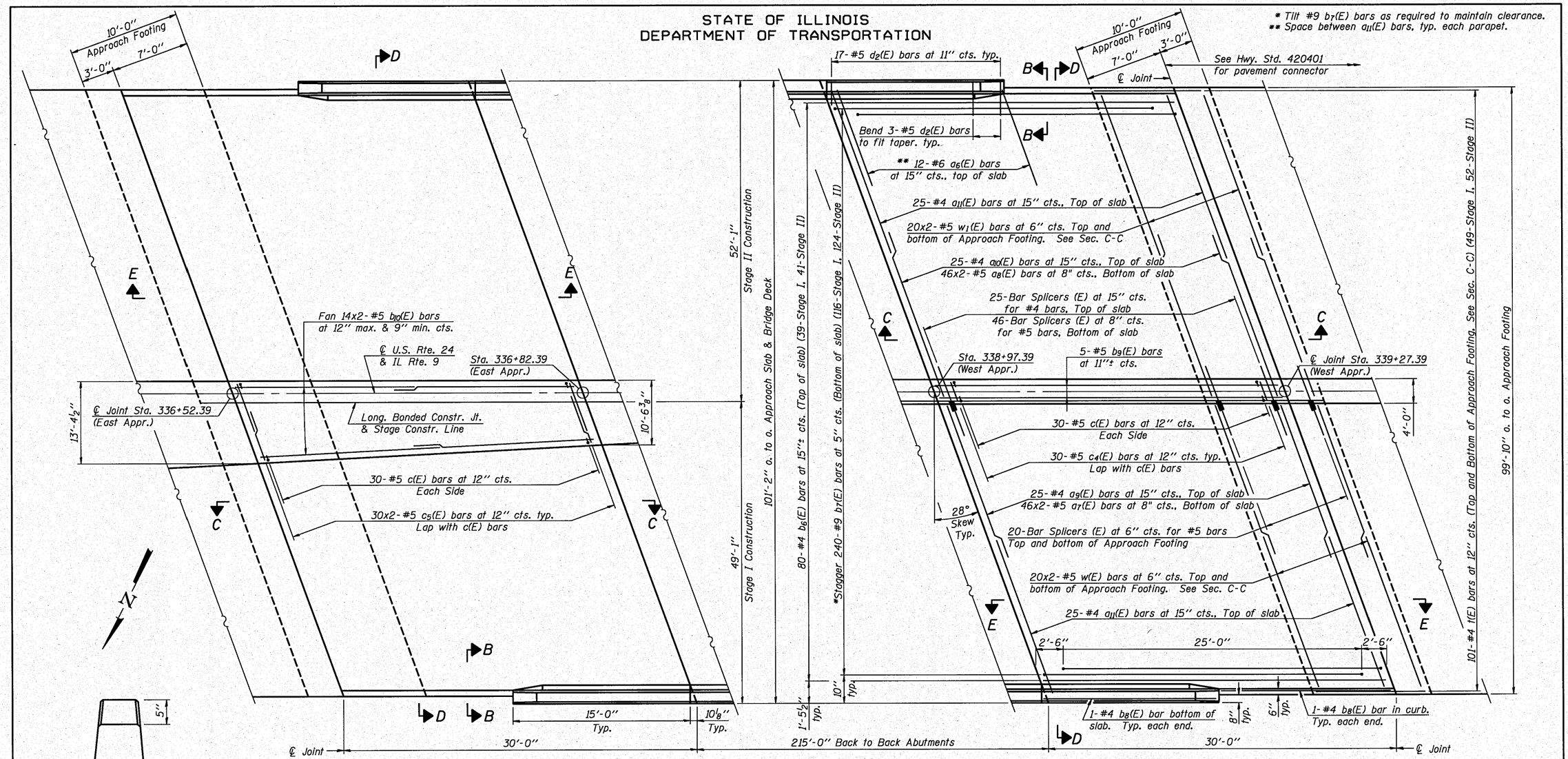

PLAN

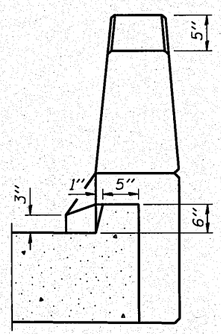

VIEW B-B

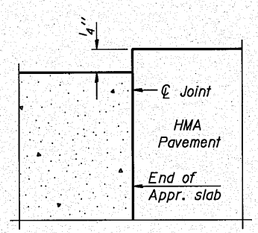

FLEXIBLE PAVEMENT

DETAIL A

MINIMUM BAR LAP

#4 bar = 2'-11"
#5 bar = 3'-3"

NOTES

1. See sheet S20 of 39 for Sections C-C & D-D and View E-E and location of Detail A.
2. $a_8(E)$ thru $a_{10}(E)$ bar spacings are measured along ℄ Rdwy.
3. Reinforcement is shown for West Approach. East Approach reinforcement is opposite hand. Median reinforcement is shown for both Approach Slabs.
4. Bars indicated thus 20x3-#5 etc. indicates 20 lines of bars with 3 lengths per line.

DESIGNED	E.E.J.
CHECKED	J.A.Z.
DRAWN	E.E.J.
CHECKED	J.A.Z.

h:\jobs2010\2010301\cad\dot_structural\dgn\00\S19_APPR_SLAB.dgn
10/18/2010

GRAEF
8501 W. Higgins Road; Suite 280
Chicago, Illinois 60631
(773) 399-0112

BRIDGE APPROACH SLAB

U.S. ROUTE 24 & IL ROUTE 9 OVER LA MARSH CREEK

STATION 337+89.89 STRUCTURE NO. 072-0228

SHEET NO. S19 OF 39 SHEETS	F.A.P. RTE.	SECTION	COUNTY	TOTAL SHEETS	SHEET NO.
	317	45BR-2	PEORIA	122	67
			CONTRACT NO. 68719		
	10-15-10	ILLINOIS	FED. AID PROJECT		

STATE OF ILLINOIS
DEPARTMENT OF TRANSPORTATION

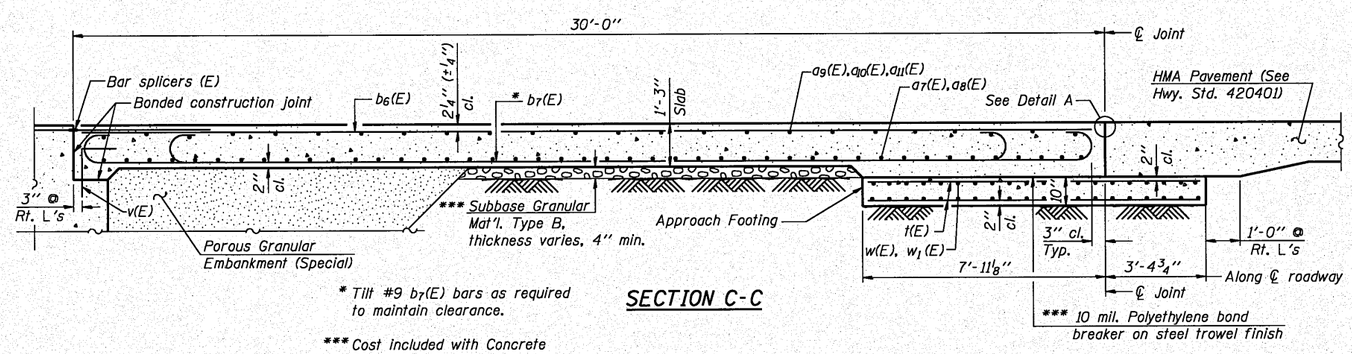

* Tilt #9 $b_7(E)$ bars as required to maintain clearance.

*** Cost included with Concrete Superstructure.

SECTION C-C

NOTES

1. See sheet S19 of 39 for Detail A and View B-B.
2. Approach slab and parapet concrete shall be paid for as Concrete Superstructure.
3. Approach footing concrete shall be paid for as Concrete Structures.
4. Reinforcement shall be paid for as Reinforcement Bars, Epoxy Coated.
5. For v(E) bar details, see sheet S16 of 39.
6. The approach footing maximum applied service bearing pressure (Qmax) = 2.0 ksf.
7. For bar splicer details, see Sheet S31 of 39.
8. Cost of excavation for approach footing included with Concrete Structures.
9. For Porous Granular Embankment (Special) and drainage treatment details, see sheet S17 of 39.
10. For additional parapet details, see sheet S16 of 39.
11. Provide ¾" ϕ galvanized expansion anchors or ferrule loop slab inserts (Proof Load 6,600 lb) at c(E) bars on each side of median. Cost is included in the cost of Reinforcement Bars, Epoxy Coated.

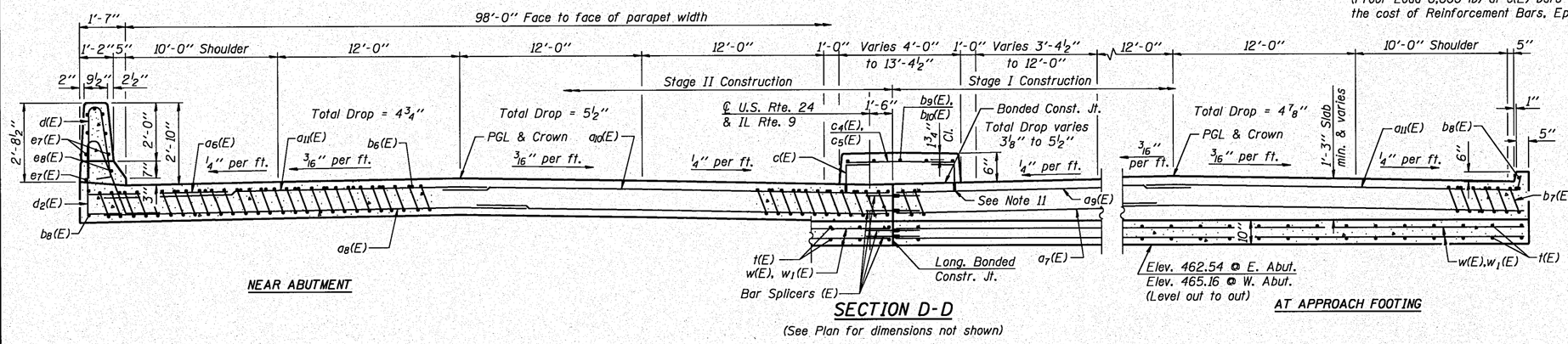

NEAR ABUTMENT

SECTION D-D
(See Plan for dimensions not shown)

AT APPROACH FOOTING

TWO APPROACHES BILL OF MATERIAL

Bar	No.	Size	Length	Shape
a6(E)	48	#6	6'-6"	
a7(E)	184	#5	29'-2"	
a8(E)	184	#5	30'-11"	
a9(E)	50	#4	28'-0"	
a10(E)	50	#4	31'-5"	
a11(E)	100	#4	30'-0"	
b6(E)	160	#4	29'-8"	
b7(E)	480	#9	29'-9"	
b8(E)	8	#4	14'-8"	
b9(E)	5	#5	29'-8"	
b10(E)	28	#5	16'-6"	
c(E)	120	#5	1'-4"	
c4(E)	30	#5	3'-11"	
c5(E)	60	#5	8'-11"	
d(E)	68	#5	5'-7"	
d2(E)	68	#5	7'-11"	
e7(E)	32	#4	14'-8"	
e8(E)	4	#8	14'-8"	
t(E)	404	#4	10'-11"	
w(E)	160	#5	28'-11"	
w1(E)	160	#5	30'-7"	
Concrete Structures			Cu. Yd.	69.8
Concrete Superstructure			Cu. Yd.	327.7
Bridge Deck Grooving			Sq. Yd.	577
Protective Coat			Sq. Yd.	695
Reinforcement Bars, Epoxy Coated			Pound	83,580
Bar Splicers			Each	222

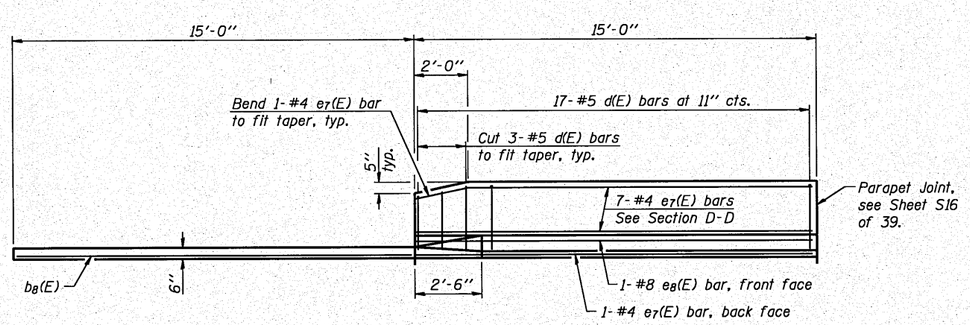

VIEW E-E

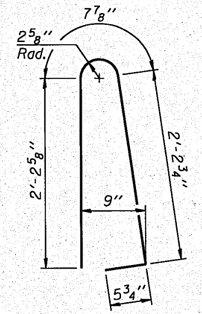

BAR d(E)

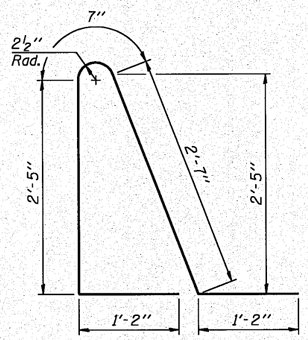

BAR d2(E)

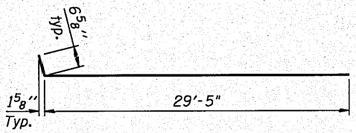

BAR a11(E)

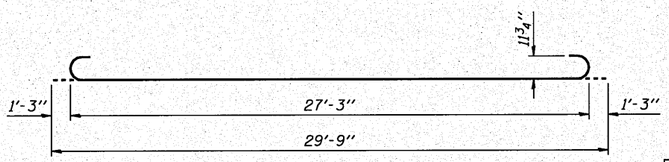

BAR b7(E)

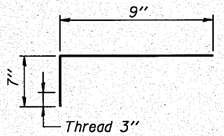

BAR c(E)

DESIGNED	E.E.J.
CHECKED	J.A.Z.
DRAWN	E.E.J.
CHECKED	J.A.Z.

h:\jobs2010\2010301014\cad\dot_structural\dgn\S00\S28_APPR_SLAB_DETAILS.dgn
10/18/2010

GRAEF 8501 W. Higgins Road; Suite 280 Chicago, Illinois 60631 (773) 399-0112

BRIDGE APPROACH SLAB DETAILS

U.S. ROUTE 24 & IL ROUTE 9 OVER LA MARSH CREEK

STATION 337+89.89 STRUCTURE NO. 072-0228

SHEET NO. S20 OF 39 SHEETS	F.A.P. RTE.	SECTION	COUNTY	TOTAL SHEETS	SHEET NO.
	317	45BR-2	PEORIA	122	68
			CONTRACT NO. 68719		
	10-15-10	ILLINOIS	FED. AID PROJECT		

STATE OF ILLINOIS
DEPARTMENT OF TRANSPORTATION

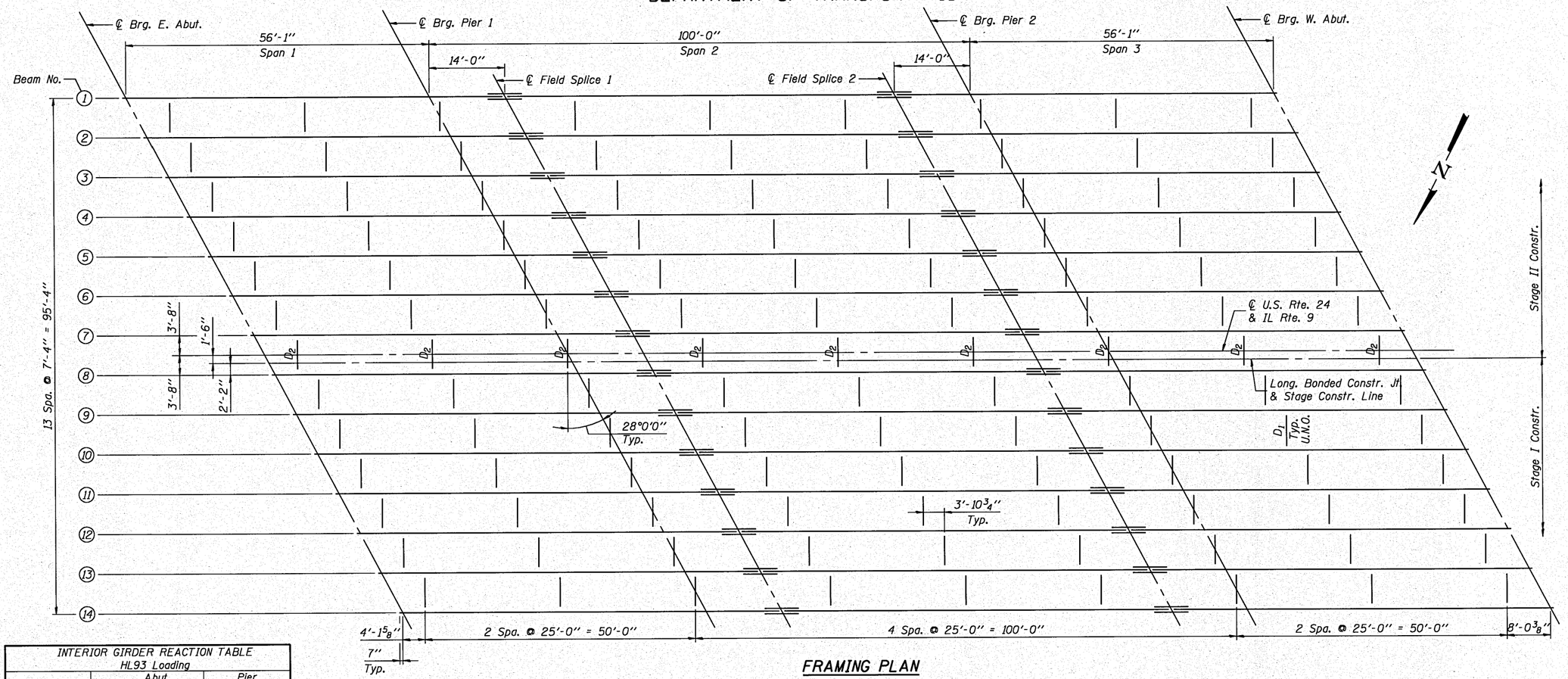

FRAMING PLAN

INTERIOR GIRDER REACTION TABLE HL93 Loading		Abut.	Pier
R_{DC1}	(k)	12.32	83.01
R_{DC2}	(k)	1.39	7.72
R_{DW}	(k)	5.46	30.28
R_{LL+Imp}	(k)	79.56	124.48
R_{Total}	(k)	98.73	245.50

INTERIOR GIRDER MOMENT TABLE		0.4 Sp. 1 & 0.6 Sp. 3	Pier 1 & Pier 2	0.5 Span 2
I_s	(in^4)	6,437	12,029	7,266
I_c (n)	(in^4)	17,397	-	20,511
I_c (3n)	(in^4)	13,311	-	15,415
S_s	(in^3)	373	668	453
S_c (n)	(in^3)	535	-	642
S_c (3n)	(in^3)	493	-	594
Z	(in^3)	-	740	-
DC1	(k/')	0.871	0.932	0.881
M_{DC1}	('k)	87.1	702	407
DC2	(k/')	0.086	0.086	0.086
M_{DC2}	('k)	11.2	57.9	49.7
DW	(k/')	0.336	0.336	0.336
M_{DW}	('k)	44.4	226	196
M_{LL+Imp}	('k)	680	810	1,092
M_u (Strength I)	('k)	1,324	2,705	2,776
$\phi_f M_n$, $\phi_f M_{nc}$	('k)	2,851	3,084	3,165
f_s DC1	(ksi)	2.80	12.61	10.78
f_s DC2	(ksi)	0.27	1.04	1.01
f_s DW	(ksi)	1.08	4.05	3.96
f_s 1.3(LL+I)	(ksi)	19.82	18.90	26.52
f_s (Service II)	(ksi)	23.97	36.60	42.27
f_s(Total)(Strength I)	(ksi)	32.14	48.57	-
V_f	(k)	55.5	-	47.8

I_s, S_s — Non-composite moment of inertia and section modulus of the steel section used for computing f_s (Total-Strength I, and Service II) due to non-composite dead loads.

$I_c(n)$, $S_c(n)$ — Composite moment of intertia and section modulus of the steel and deck based upon the modular ratio, "n", used for computing f_s (Total-Strength I, and Service II) due to short-term composite live loads.

$I_c(3n)$, $S_c(3n)$ — Composite moment of inertia and section modulus of the steel and deck based upon 3 times the modular ratio, "3n", used for computing f_s (Total-Strength I, and Service II) due to long-term composite (superimposed) dead loads.

Z — Plastic Section Modulus of the steel section in non-composite areas.

DC1 — Un-factored non-composite dead load.

M_{DC1} — Un-factored moment due to non-composite dead load.

DC2 — Un-factored long-term composite (superimposed excluding future wearing surface) dead load.

M_{DC2} — Un-factored moment due to long-term composite (superimposed excluding future wearing surface) dead load.

DW — Un-factored long-term composite (superimposed future wearing surface only) dead load.

M_{DW} — Un-factored moment due to long-term composite (superimposed future wearing surface only) dead load.

M_{LL+Imp} — Un-factored live load moment plus dynamic load allowance (impact).

M_u(Strength I) — Factored design moment.
$1.25\ (M_{DC1} + M_{DC2}) + 1.5M_{DW} + 1.75M_{LL+Imp}$

$\phi_f M_n$ — Compact composite positive moment capacity computed according to Article 6.10.7.1.

$\phi_f M_{nc}$ — Compact non-composite negative moment capacity computed according to Article A6.1.1.

f_s(Service II) — Sum of stresses as computed from the moments below.
$M_{DC1} + M_{DC2} + M_{DW} + 1.3M_{LL+Imp}$

f_s(Total)(Strength I) — Sum of stresses as computed from the moments below on non-compact section.
$1.25\ (M_{DC1} + M_{DC2}) + 1.5M_{DW} + 1.75M_{LL+Imp}$

V_f — Maximum factored shear range in composite portion of span computed according to Article 6.10.10.

NOTES

1. Two hardened washers required for each set of oversized holes at diaphragms.
2. All Structural Steel on this sheet shall be AASHTO M270 Grade 50W.
3. All diaphragms shall be installed as steel is erected and secured with erection pins and bolts except as otherwise noted. Individual diaphragms at supports may be temporarily disconnected to install bearing anchor rods.

GRAEF 8501 W. Higgins Road; Suite 280 Chicago, Illinois 60631 (773) 399-0112

FRAMING PLAN
U.S. ROUTE 24 & IL ROUTE 9 OVER LA MARSH CREEK
STATION 337+89.89 STRUCTURE NO. 072-0228

SHEET NO. S21 OF 39 SHEETS	F.A.P. RTE.	SECTION	COUNTY	TOTAL SHEETS	SHEET NO.
	317	45BR-2	PEORIA	122	69
			CONTRACT NO. 68719		
	10-15-10	ILLINOIS	FED. AID PROJECT		

DESIGNED	J.Z.
CHECKED	J.A.Z.
DRAWN	R.B.H.
CHECKED	J.A.Z.

h:\jobs2010\2010314\cad\dot_structural\dgn\00\S21_FRAMING_PLAN.dgn
10/18/2010

STATE OF ILLINOIS
DEPARTMENT OF TRANSPORTATION

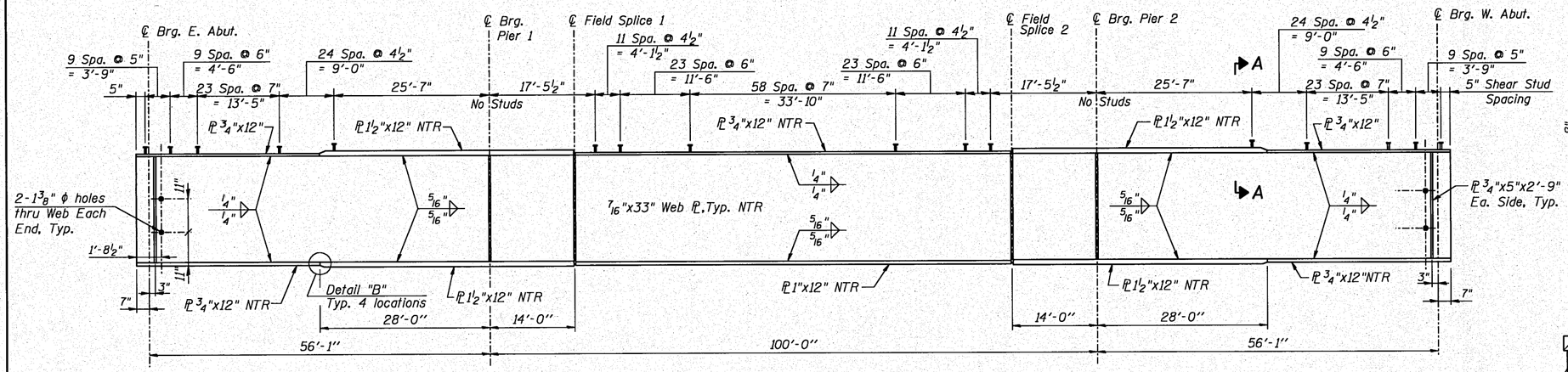

TYPICAL GIRDER ELEVATION

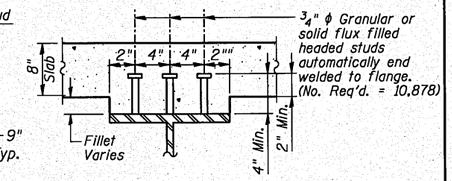

SECTION A-A

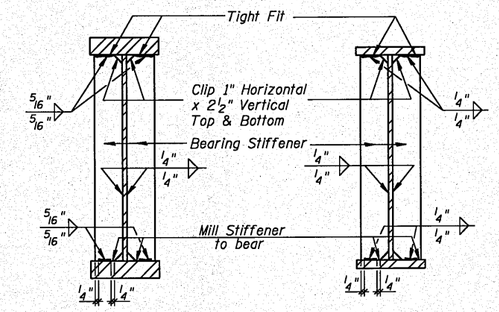

SECTION AT PIER

SECTION AT ABUTMENT

TOP OF GIRDER WEB ELEVATIONS (For Fabrication only)						
Girder No.	℄ Brg. E. Abut.	℄ Brg. Pier 1	℄ Splice 1	℄ Splice 2	℄ Brg. Pier 2	℄ Brg. W. Abut.
1	464.17	464.69	464.82	465.51	465.66	466.23
2	464.37	464.88	465.01	465.71	465.85	466.42
3	464.52	465.04	465.17	465.86	466.01	466.58
4	464.64	465.15	465.28	465.98	466.12	466.69
5	464.56	465.07	465.20	465.90	466.04	466.61
6	464.46	464.98	465.10	465.80	465.94	466.52
7	464.35	464.86	464.99	465.69	465.83	466.40
8	464.38	464.90	465.03	465.72	465.87	466.44
9	464.57	465.09	465.22	465.91	466.06	466.63
10	464.75	465.26	465.39	466.09	466.23	466.80
11	464.90	465.41	465.54	466.24	466.38	466.96
12	464.86	465.38	465.51	466.20	466.35	466.92
13	464.78	465.30	465.42	466.12	466.26	466.84
14	464.67	465.18	465.31	466.00	466.15	466.72

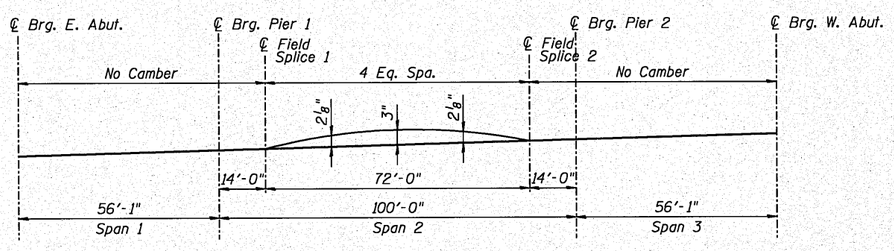

CAMBER DIAGRAM

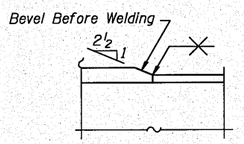

DETAIL "B"

NOTES

1. Work this Sheet with Sheet S21 & S23 of 39.
2. Load carrying components designated "NTR" shall conform to the Supplemental Requirements for Notch Toughness, Zone 2.
3. All Structural Steel on this Sheet shall be AASHTO M270 Grade 50W Steel.

BILL OF MATERIAL

Item	Unit	Total
Stud Shear Connectors	Each	10,878

DESIGNED	J.Z.
CHECKED	J.A.Z.
DRAWN	S.R.K.
CHECKED	J.A.Z.

GRāEF 8501 W. Higgins Road; Suite 280 Chicago, Illinois 60631 (773) 399-0112

GIRDER ELEVATION

U.S. ROUTE 24 & IL ROUTE 9 OVER LA MARSH CREEK

STATION 337+89.89 STRUCTURE NO. 072-0228

SHEET NO. S22 OF 39 SHEETS	F.A.P. RTE.	SECTION	COUNTY	TOTAL SHEETS	SHEET NO.
	317	45BR-2	PEORIA	122	70
			CONTRACT NO. 68719		
	10-15-10	ILLINOIS	FED. AID PROJECT		

h:\jobs2010\2010314\cad\dot_structural\dgn\00\S22_GIRDER_ELEVATION.dgn
10/18/2010

STATE OF ILLINOIS
DEPARTMENT OF TRANSPORTATION

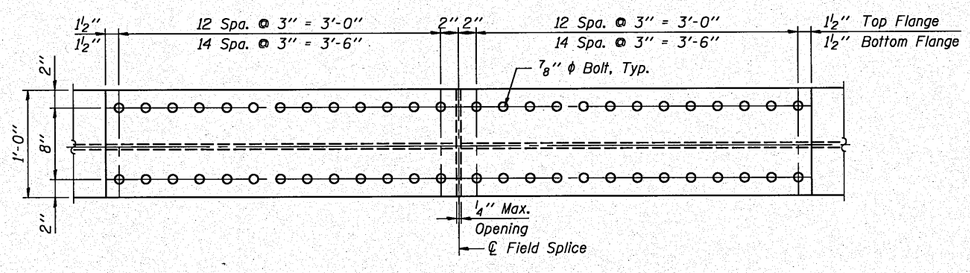

FLANGE SPLICE

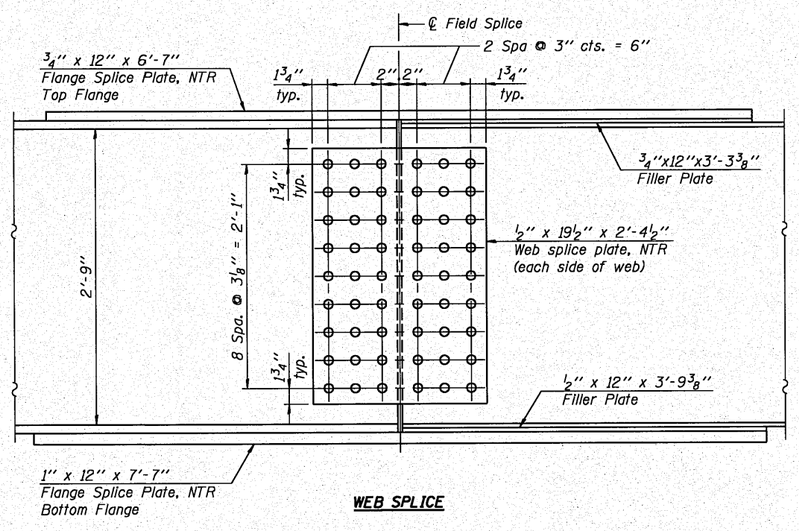

WEB SPLICE

FIELD SPLICES 1 & 2

(Looking South at Field Splice 1
Looking North at Field Splice 2)

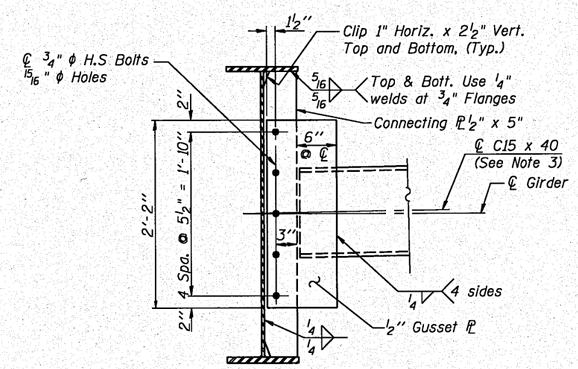

INTERIOR DIAPHRAGM - D1

(108 Required)

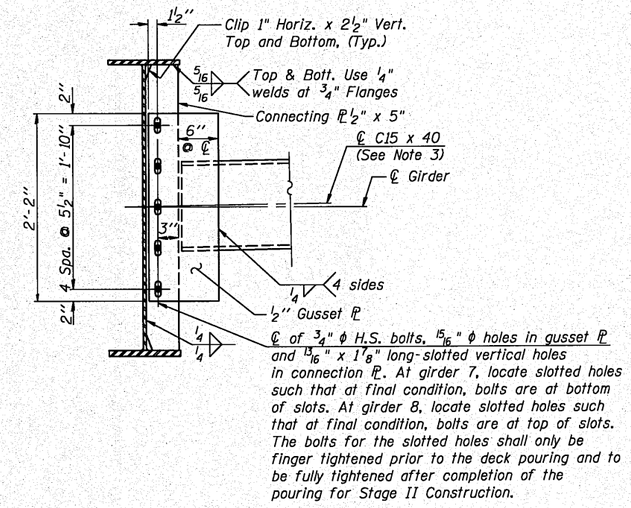

INTERIOR DIAPHRAGM - D2

(9 Required)

NOTES

1. All Structural Steel on this Sheet shall be AASHTO M270 Grade 50W.
2. Two hardened washers are required for each set of oversized holes.
3. Alternate C15x50 diaphragm channels are permitted to facilitate material acquisition. Calculated weight of structural steel is based on C15x40. The alternate, if utilized, shall be provided at no extra cost to the Department.

DESIGNED	J.Z.
CHECKED	J.A.Z.
DRAWN	R.B.H.
CHECKED	J.A.Z.

GRAEF
8501 W. Higgins Road; Suite 280
Chicago, Illinois 60631
(773) 399-0112

FIELD SPLICES AND DIAPHRAGM DETAILS

U.S. ROUTE 24 & IL ROUTE 9 OVER LA MARSH CREEK

STATION 337+89.89 STRUCTURE NO. 072-0228

SHEET NO.	F.A.P. RTE.	SECTION	COUNTY	TOTAL SHEETS	SHEET NO.
S23 OF 39 SHEETS	317	45BR-2	PEORIA	122	71
			CONTRACT NO. 68719		
	10-15-10	ILLINOIS	FED. AID PROJECT		

h:\jobs2010\2010301\cad\dgn_structural\dgn\009\S23_FIELD_SPLICES.dgn
10/18/2010

STATE OF ILLINOIS
DEPARTMENT OF TRANSPORTATION

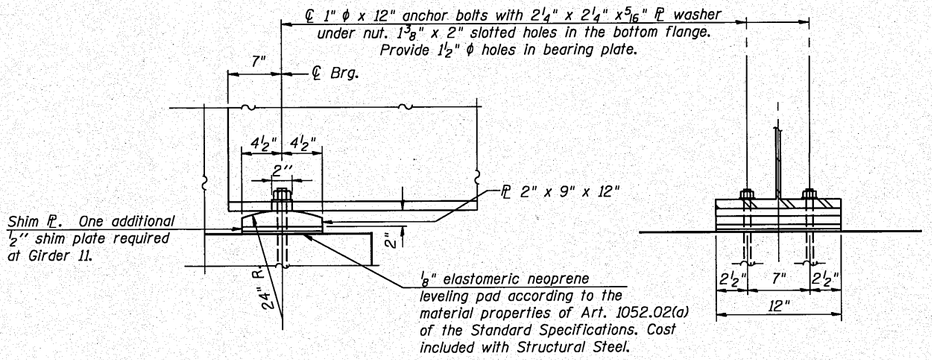

FIXED BEARING AT ABUTMENTS

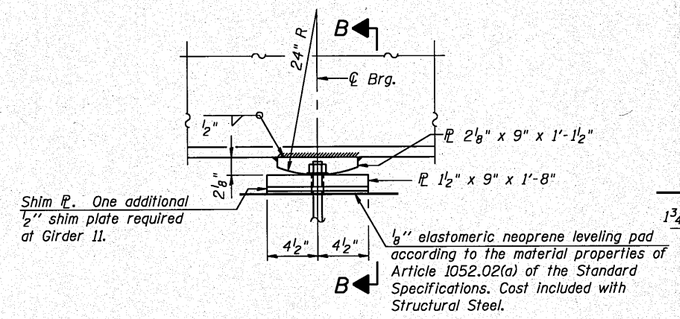

ELEVATION AT PIERS

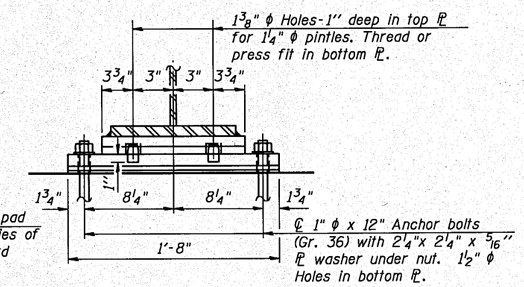

SECTION B-B

FIXED BEARING AT PIERS

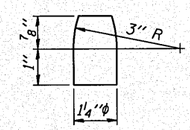

PINTLE

NOTES:

1. Anchor bolts shall be ASTM F1554 all-thread (or an Engineer-approved alternate material) of the grade(s) and diameter(s) specified. ASTM A307 Grade C anchor bolts may be used in lieu of ASTM F1554 Grade 36 (Fy=36ksi). The corresponding specified grade of AASHTO M314 anchor bolts may be used in lieu of ASTM F1554.
2. Anchor bolts at fixed bearings may be either cast in place or installed in holes drilled after the supported member is in place.
3. Drilled and set anchor bolts shall be installed according to Article 521.06 of the Standard Specifications.
4. The structural steel plates of the Bearing Assembly shall conform to the requirements of AASHTO M 270 Grade 50W.
5. Two ⅛ in. adjusting shims shall be provided for each bearing in addition to all other plates or shims and placed as shown on bearing details.

BILL OF MATERIAL

Item	Unit	Total
Anchor Bolts, 1"	Each	112

DESIGNED	J.Z.
CHECKED	J.A.Z.
DRAWN	R.B.H.
CHECKED	J.A.Z.

h:\jobs2010\2010301\cad\dot_structural\dgn\00\S24_BRGS_&_STEEL_DETAILS.dgn
10/18/2010

GRAEF
8501 W. Higgins Road; Suite 280
Chicago, Illinois 60631
(773) 399-0112

BEARING DETAILS

U.S. ROUTE 24 & IL ROUTE 9 OVER LA MARSH CREEK

STATION 337+89.89 STRUCTURE NO. 072-0228

SHEET NO. S24 OF 39 SHEETS	F.A.P. RTE.	SECTION	COUNTY	TOTAL SHEETS	SHEET NO.
	317	45BR-2	PEORIA	122	72
			CONTRACT NO. 68719		
	10-15-10	ILLINOIS	FED. AID PROJECT		

STATE OF ILLINOIS
DEPARTMENT OF TRANSPORTATION

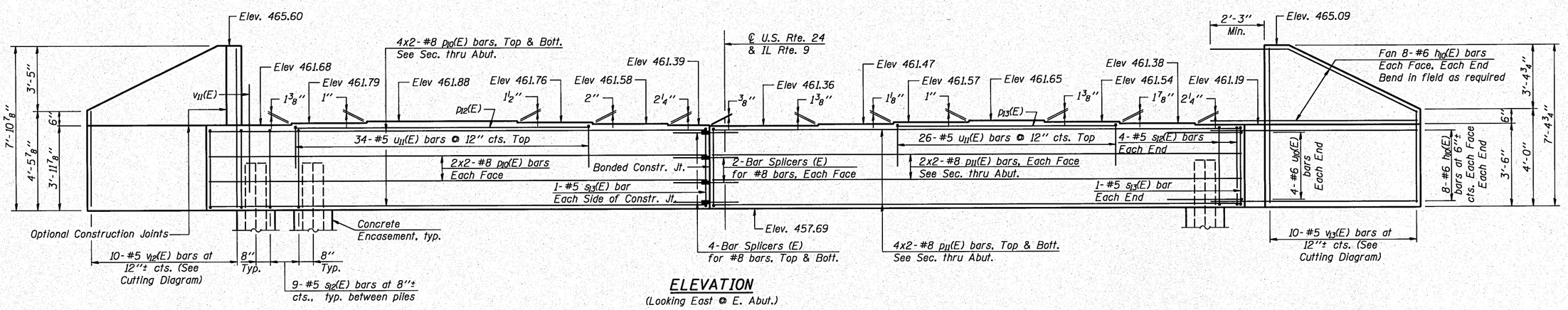

ELEVATION

(Looking East @ E. Abut.)

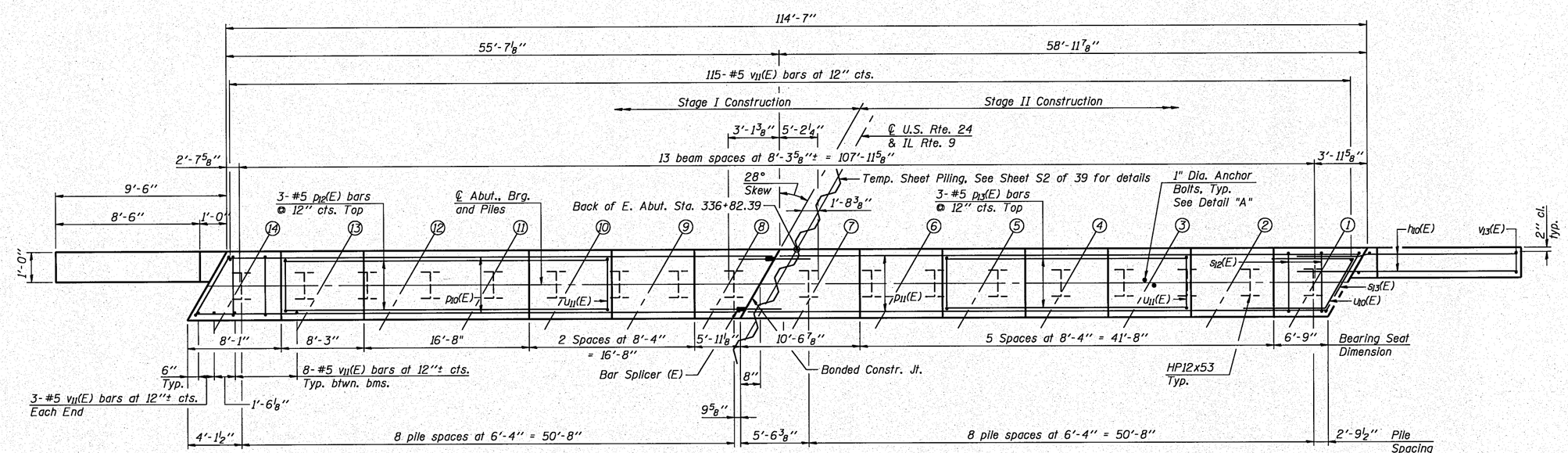

PLAN

PILE DATA

Pile Type and Size: Steel HP12x53 with Pile Shoes
Nominal Required Bearing: 419 kip
Factored Resistance Available: 230 kip
Est. Length: 44 ft (See Note 4)
No. Production Piles Per Abutment: 17
No. Test Piles per Abutment: 1
Estimated Top of Rock Elevation: 420

NOTES

1. See Sheet S27 of 39 for Detail "A" and Abutment Details.
2. Bars indicated thus 20x3-#5 etc. indicates 20 lines of bars with 3 lengths per line.
3. Pour steps monolithically with cap.
4. Estimated pile lengths have been increased by 4' for penetration into rock.

MIN. BAR LAP

#8 bar = 7'-8"

DESIGNED	E.E.J.
CHECKED	J.A.Z.
DRAWN	E.E.J.
CHECKED	J.A.Z.

GRAEF 8501 W. Higgins Road; Suite 280 Chicago, Illinois 60631 (773) 399-0112

EAST ABUTMENT

U.S. ROUTE 24 & IL ROUTE 9 OVER LA MARSH CREEK

STATION 337+89.89 STRUCTURE NO. 072-0228

SHEET NO. S25 OF 39 SHEETS	F.A.P. RTE.	SECTION	COUNTY	TOTAL SHEETS	SHEET NO.
	317	45BR-2	PEORIA	122	73
			CONTRACT NO. 68719		
	10-15-10	ILLINOIS	FED. AID PROJECT		

h:\jobs2010\2010301\cad\dot_structural\dgn\00\S25_EAST_ABUTMENT.dgn
10/18/2010

STATE OF ILLINOIS
DEPARTMENT OF TRANSPORTATION

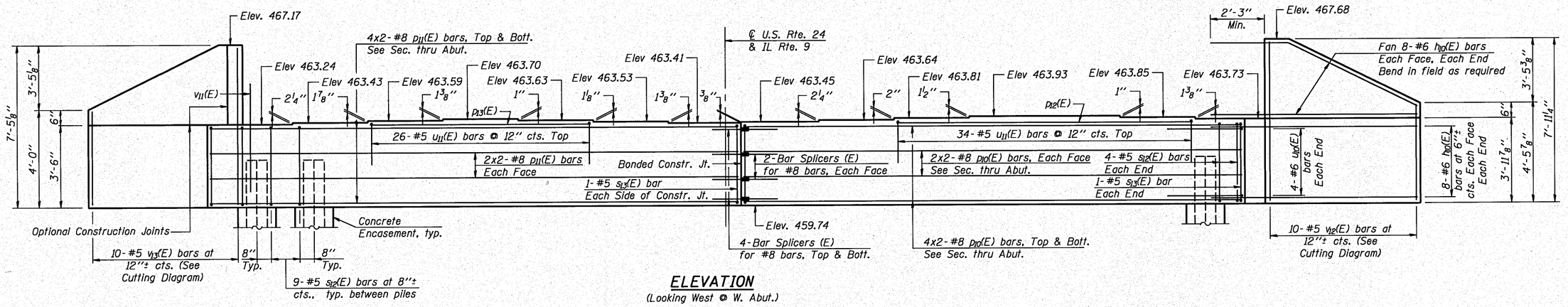

ELEVATION
(Looking West @ W. Abut.)

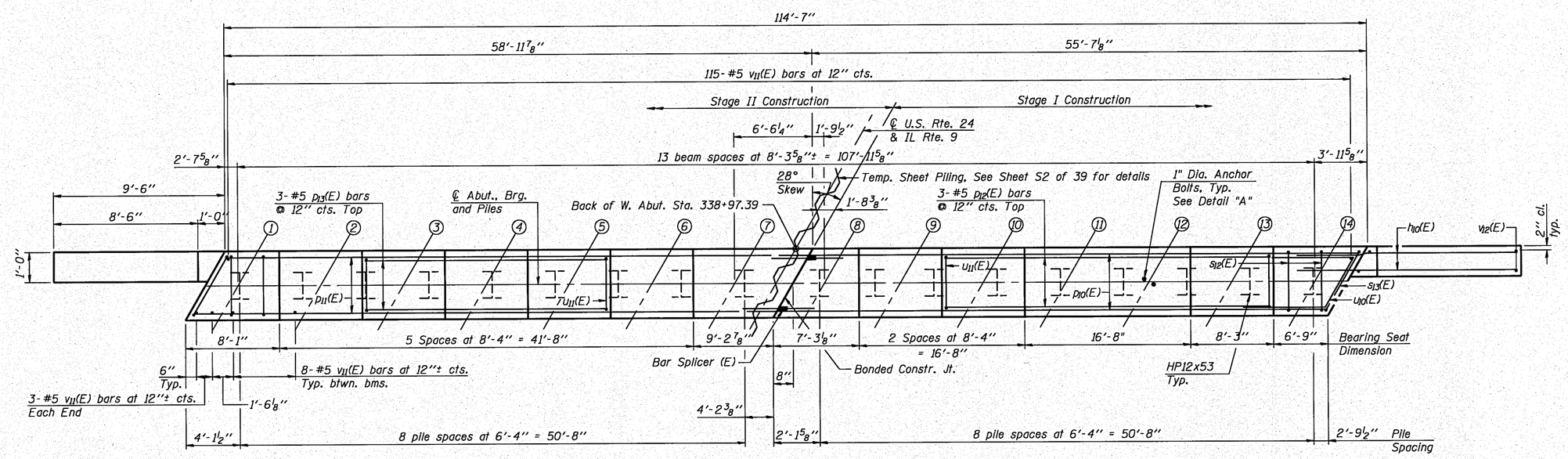

PLAN

N

PILE DATA

Pile Type and Size: Steel HP12x53 with Pile Shoes
Nominal Required Bearing: 419 kip
Factored Resistance Available: 230 kip
Est. Length: 39 ft (See Note 4)
No. Production Piles Per Abutment: 17
No. Test Piles per Abutment: 1
Estimated Top of Rock Elevation: 427.0

NOTES

1. See Sheet S27 of 39 for Detail "A" and Abutment Details.
2. Bars indicated thus 20x3-#5 etc. indicates 20 lines of bars with 3 lengths per line.
3. Pour steps monolithically with cap.
4. Estimated pile lengths have been increased by 4' for penetration into rock.

MIN. BAR LAP

#8 bar = 7'-8"

DESIGNED	E.E.J.
CHECKED	J.A.Z.
DRAWN	E.E.J.
CHECKED	J.A.Z.

GRAEF 8501 W. Higgins Road; Suite 280 Chicago, Illinois 60631 (773) 399-0112

WEST ABUTMENT
U.S. ROUTE 24 & IL ROUTE 9 OVER LA MARSH CREEK
STATION 337+89.89 STRUCTURE NO. 072-0228

SHEET NO. S26 OF 39 SHEETS	F.A.P. RTE.	SECTION	COUNTY	TOTAL SHEETS	SHEET NO.
	317	45BR-2	PEORIA	122	74
			CONTRACT NO. 68719		
	10-15-10	ILLINOIS	FED. AID PROJECT		

h:\jobs2010\2010301\cad\idot_structural\dgn\00\S26_WEST_ABUTMENT.dgn
10/18/2010

STATE OF ILLINOIS
DEPARTMENT OF TRANSPORTATION

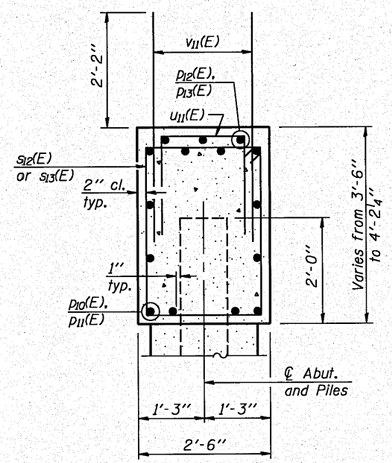

SEC. THRU ABUT.

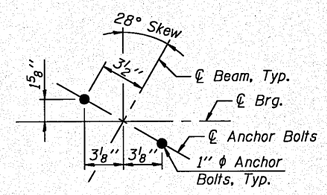

DETAIL "A"

TWO ABUTMENTS BILL OF MATERIAL

Bar	No.	Size	Length	Shape
$h_{10}(E)$	128	#6	12'-2"	
$p_{10}(E)$	48	#8	31'-6"	
$p_{11}(E)$	48	#8	33'-2"	
$p_{12}(E)$	6	#5	32'-10"	
$p_{13}(E)$	6	#5	25'-7"	
$s_{12}(E)$	322	#5	11'-8"	
$s_{13}(E)$	8	#5	12'-4"	
$u_{10}(E)$	16	#6	11'-4"	
$u_{11}(E)$	120	#5	6'-0"	
$v_{11}(E)$	450	#5	4'-4"	
$v_{12}(E)$	20	#5	11'-9"	
$v_{13}(E)$	20	#5	10'-9"	
Structure Excavation			Cu. Yd.	730
Concrete Structures			Cu. Yd.	91.0
Concrete Encasement			Cu. Yd.	12.2
Reinforcement Bars, Epoxy Coated			Pound	18,540
Bar Splicers			Each	24
Furnishing Steel Piles HP12x53			Foot	1,411
Driving Piles			Foot	1,411
Test Pile Steel HP12x53			Each	2
Piles Shoes			Each	36

For details of Bar Splicers, see sheet S31 of 39.
For details of piles and Concrete Encasement, see sheet S30 of 39.

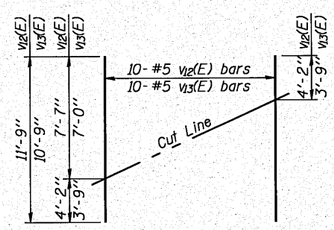

CUTTING DIAGRAM

Order $v_{12}(E)$ & $v_{13}(E)$ full length. Cut as shown and use remainder of bars in opposite face.

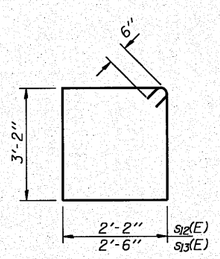

BARS $s_{12}(E)$ & $s_{13}(E)$

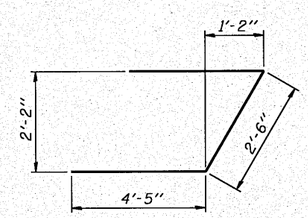

BAR $u_{10}(E)$

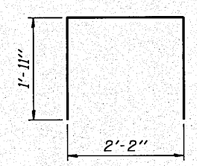

BAR $u_{11}(E)$

DESIGNED	E.E.J.
CHECKED	J.A.Z.
DRAWN	E.E.J.
CHECKED	J.A.Z.

GRAEF 8501 W. Higgins Road; Suite 280 Chicago, Illinois 60631 (773) 399-0112

ABUTMENT DETAILS

U.S. ROUTE 24 & IL ROUTE 9 OVER LA MARSH CREEK

STATION 337+89.89 STRUCTURE NO. 072-0228

SHEET NO. S27 OF 39 SHEETS	F.A.P. RTE.	SECTION	COUNTY	TOTAL SHEETS	SHEET NO.
	317	45BR-2	PEORIA	122	75
			CONTRACT NO. 68719		
	10-15-10	ILLINOIS	FED. AID PROJECT		

h:\jobs2010\2010314\cad\idot_structural\dgn\00\S27_ABUTMENT_DETAILS.dgn
10/18/2010

STATE OF ILLINOIS
DEPARTMENT OF TRANSPORTATION

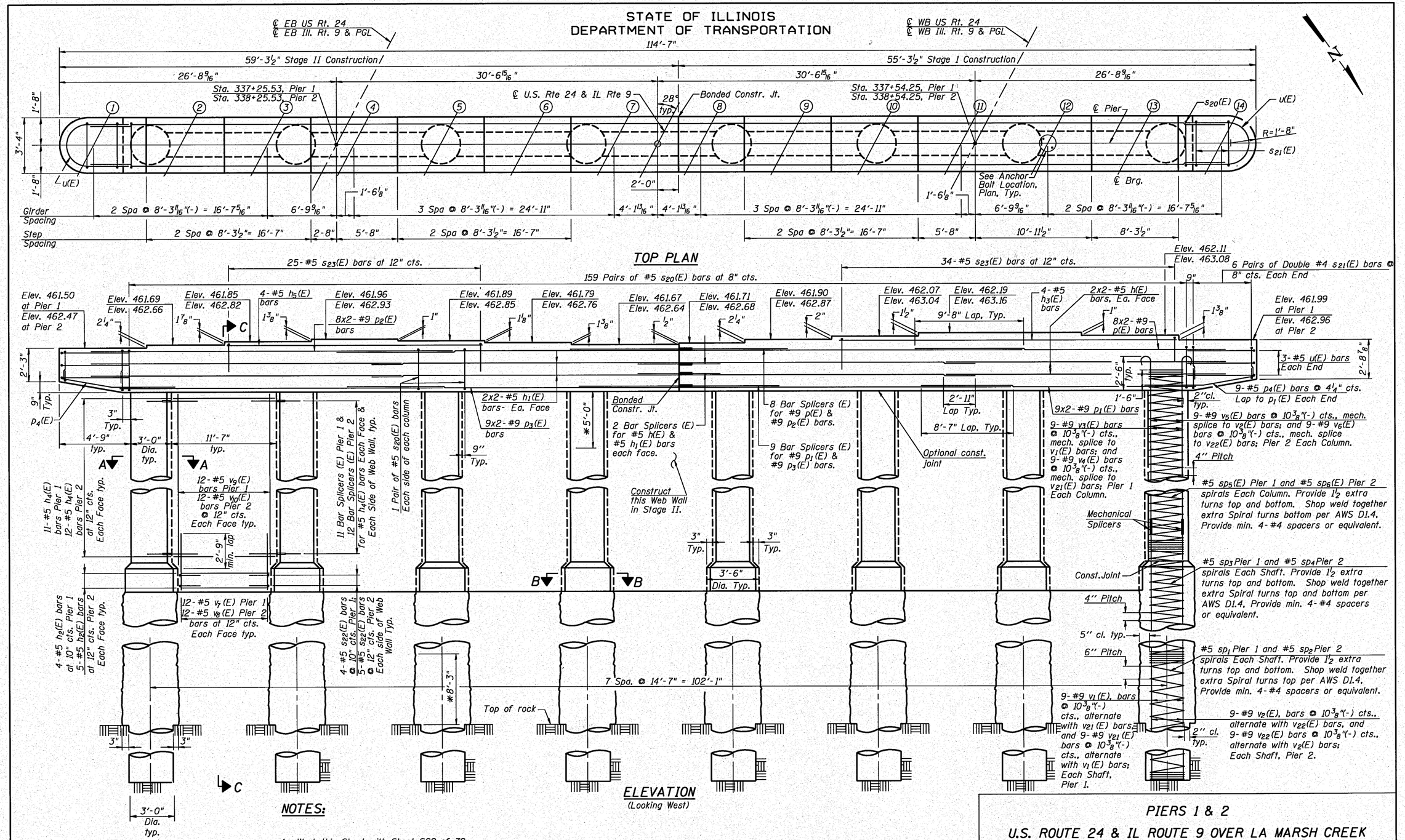

NOTES:

1. Work this Sheet with Sheet S29 of 39.
2. *Splicing of reinforcement bars in columns & shafts is not allowed in these regions.

DESIGNED	J.Z.
CHECKED	J.J.G.
DRAWN	B.L.M.
CHECKED	J.J.G.

GRÄEF 8501 W. Higgins Road; Suite 280 Chicago, Illinois 60631 (773) 399-0112

PIERS 1 & 2

U.S. ROUTE 24 & IL ROUTE 9 OVER LA MARSH CREEK

STATION 337+89.89 STRUCTURE NO. 072-0228

SHEET NO.	F.A.P. RTE.	SECTION	COUNTY	TOTAL SHEETS	SHEET NO.
S28 OF 39 SHEETS	317	45BR-2	PEORIA	122	76
			CONTRACT NO. 68719		
	10-15-10	ILLINOIS	FED. AID PROJECT		

h:\jobs2010\20103014\cad\dot_structural\dgn\072\S28_PIER_1AND2.dgn
10/18/2010

STATE OF ILLINOIS
DEPARTMENT OF TRANSPORTATION

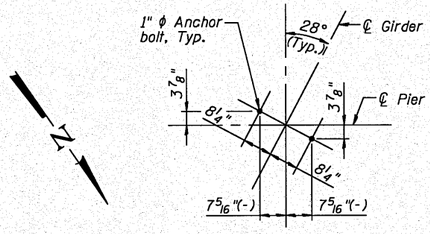

ANCHOR BOLT LOCATION PLAN

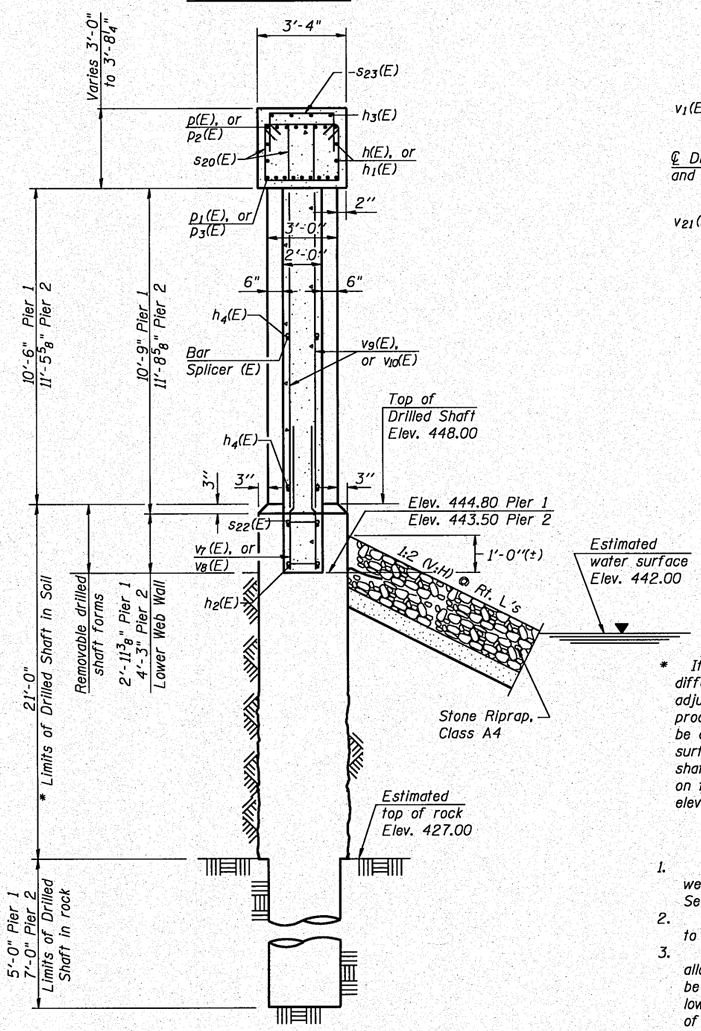

SECTION C-C

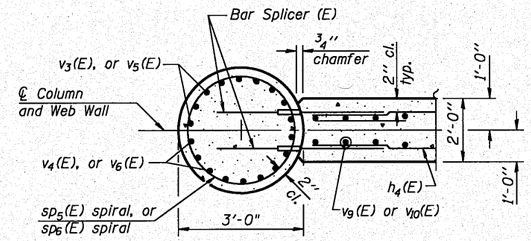

SECTION A-A

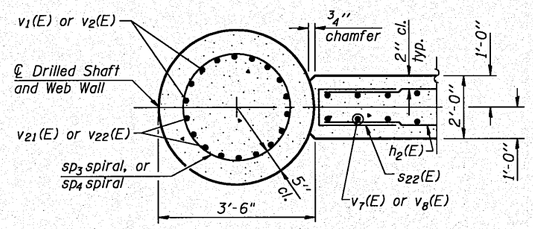

SECTION B-B

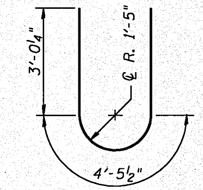

BAR u(E)

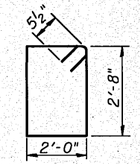

BAR s20(E)

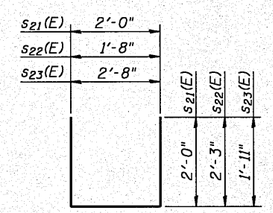

BARS s21(E), s22(E) & s23(E)

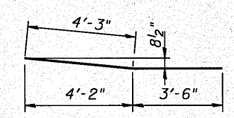

BAR p4(E)

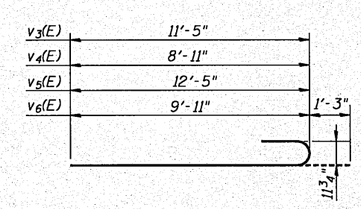

BARS v3(E) THRU v6(E)

TWO PIERS BILL OF MATERIAL

	Bar	No.	Size	Length	Shape
	h(E)	16	#5	28'-2"	
	h_1(E)	16	#5	30'-0"	
	h_2(E)	126	#5	10'-10"	
	h_3(E)	8	#5	32'-11"	
	h_4(E)	322	#5	11'-4"	
	h_5(E)	8	#5	24'-7"	
	p(E)	32	#9	31'-8"	
	p_1(E)	36	#9	31'-2"	
	p_2(E)	32	#9	33'-8"	
	p_3(E)	36	#9	33'-2"	
	p_4(E)	36	#5	7'-9"	
	s_{20}(E)	700	#5	10'-3"	
	s_{21}(E)	96	#4	6'-0"	
	s_{22}(E)	126	#5	6'-2"	
	s_{23}(E)	118	#5	6'-6"	
**	sp_1	8	#5	12'-9"	
**	sp_2	8	#5	13'-6"	
**	sp_3	8	#5	13'-9"	
**	sp_4	8	#5	15'-0"	
**	sp_5(E)	8	#5	11'-6"	
**	sp_6(E)	8	#5	12'-6"	
	u(E)	12	#5	10'-6"	
	v_1(E)	72	#9	27'-6"	
	v_2(E)	72	#9	29'-6"	
	v_3(E)	72	#9	12'-8'	
	v_4(E)	72	#9	10'-2"	
	v_5(E)	72	#9	13'-8"	
	v_6(E)	72	#9	11'-2"	
	v_7(E)	168	#5	5'-9"	
	v_8(E)	168	#5	7'-0"	
	v_9(E)	168	#5	10'-7"	
	v_{10}(E)	168	#5	11'-6"	
	v_{21}(E)	72	#9	30'-0"	
	v_{22}(E)	72	#9	32'-0"	
	Concrete Structures			Cu. Yd.	317.7
	Reinforcement Bars			Pound	10,000
	Reinforcement Bars, Epoxy Coated			Pound	83,650
	Bar Splicers			Each	686
	Drilled Shaft in Soil			Cu. Yd.	120
	Drilled Shaft in Rock			Cu. Yd.	26
	Underwater Structure Excavation Protection Location 1			Each	1
	Underwater Structure Excavation Protection Location 2			Each	1
	Mechanical Splicers			Each	288

** Length is height of spiral.

* If the prevailing water surface elevation during construction is consistently different than estimated on the plans, the contractor may propose an adjustment to the top of the drilled shaft elevation as part of their installation procedure. The top of all drilled shafts within a substructure unit shall be constructed to the same elevation and extend above the prevailing water surface. The quantities and reinforcement detailed are based on the top of shaft and the estimated elevations shown and may change based on the actual elevations encountered at each shaft and the final top of shaft elevation.

CONSTRUCTION SEQUENCE FOR WEB WALL:

1. Excavate between shafts to elevation of web wall base and set lower web wall forms through water to bear on the circular edge of drilled shafts. Secure in place with fill, struts or tie forms together as required.
2. Place the lower web wall reinforcement cage into the forms using spacers to maintain proper clearances.
3. If the forms can be sealed against the shafts and streambed to allow dewatering, the reinforcement and the concrete placement may be completed in the dry. Alternatively, the rebar cage can be lowered into position through water and the concrete discharged at the base of the excavation through a tremie pipe or pump hose, displacing water, sediment, and tainted concrete out the top of the forms. Concrete shall be tremied according to Article 503.08 of the Standard Specifications to an elevation of 1'-0" above the water line at the time of construction.
4. Construct Columns.
5. Construct upper web walls.

NOTES

1. Work this sheet with Sheet S28 of 39.
2. Cast steps monolithically with cap.
3. Space cap reinforcement to miss anchor bolts.
4. When splicing of spiral reinforcement is necessary, the spirals shall be provided with 1½ extra turns at the ends to be spliced. These additional turns shall either be welded together according to AWS D1.4, or shall both terminate with a 135° standard hook.
5. Bars indicated thus 8 x 2 - #9 etc. indicates 8 lines of bars with 2 lengths per line.

DESIGNED	J.Z.
CHECKED	J.J.G.
DRAWN	B.L.M.
CHECKED	J.J.G.

GRAEF
8501 W. Higgins Road; Suite 280
Chicago, Illinois 60631
(773) 399-0112

PIER DETAILS

U.S. ROUTE 24 & IL ROUTE 9 OVER LA MARSH CREEK

STATION 337+89.89 STRUCTURE NO. 072-0228

SHEET NO. S29 OF 39 SHEETS	F.A.P. RTE.	SECTION	COUNTY	TOTAL SHEETS	SHEET NO.
	317	45BR-2	PEORIA	122	77
			CONTRACT NO. 68719		
	10-15-10	ILLINOIS	FED. AID PROJECT		

h:\jobs2010\2010304\cad\idot_structural\dgn\00\S29_PIER_DETAILS.dgn
10/18/2010

STATE OF ILLINOIS
DEPARTMENT OF TRANSPORTATION

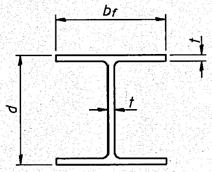

STEEL PILE TABLE

Designation	Depth d	Flange width b_f	Web and Flange thickness t	Encasement diameter A
HP 14x117	14 1/4"	14 7/8"	13/16"	30"
x102	14"	14 3/4"	11/16"	30"
x89	13 7/8"	14 3/4"	5/8"	30"
x73	13 5/8"	14 5/8"	1/2"	30"
HP 12x84	12 1/4"	12 1/4"	11/16"	24"
x74	12 1/8"	12 1/4"	5/8"	24"
x63	12"	12 1/8"	1/2"	24"
x53	11 3/4"	12"	7/16"	24"
HP 10x57	10"	10 1/4"	9/16"	24"
x42	9 3/4"	10 1/8"	7/16"	24"
HP 8x36	8"	8 1/8"	7/16"	18"

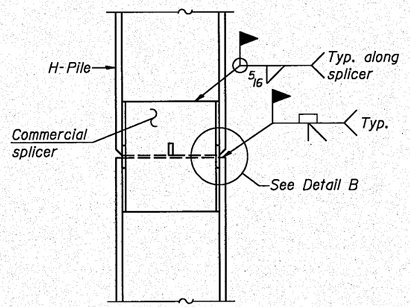

ELEVATION

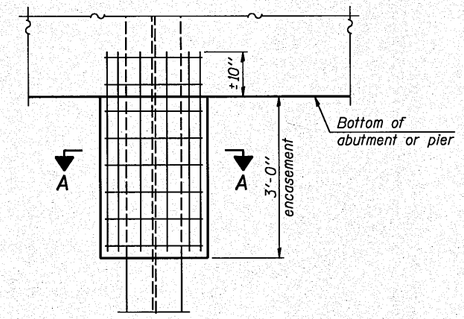

ELEVATION

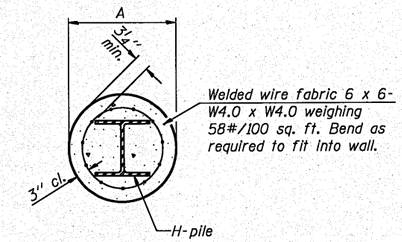

Note:
Forms for encasement may be omitted when soil conditions permit.

SECTION A-A

PILE ENCASEMENT

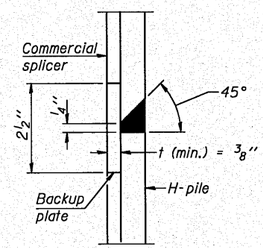

DETAIL "B"

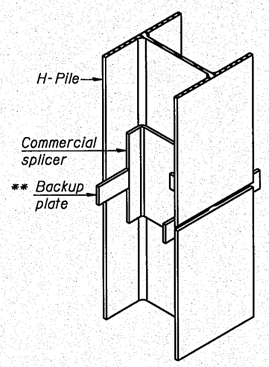

ISOMETRIC VIEW

WELDED COMMERCIAL SPLICE

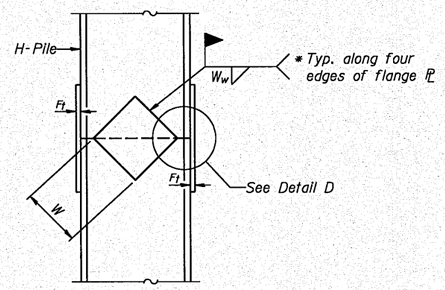

ELEVATION

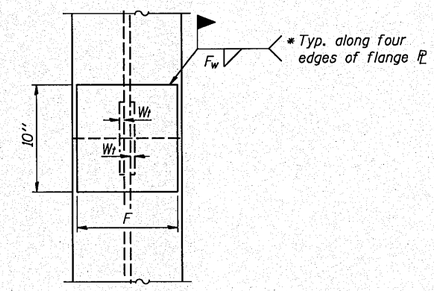

END VIEW

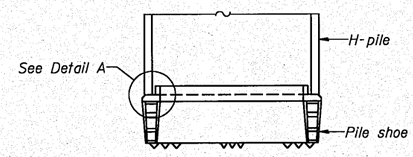

ELEVATION

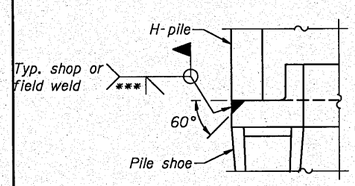

DETAIL A

H-PILE SHOE ATTACHMENT

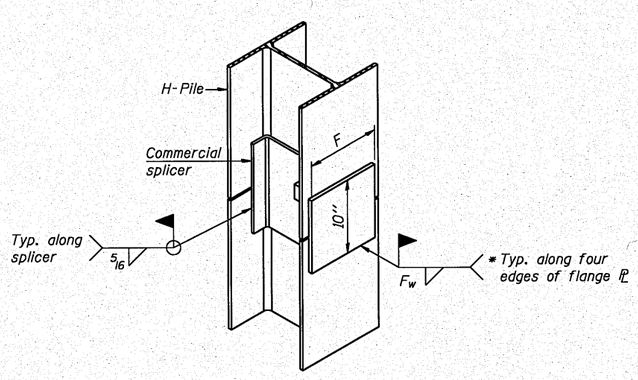

ISOMETRIC VIEW

WELDED COMMERCIAL SPLICE ALTERNATE

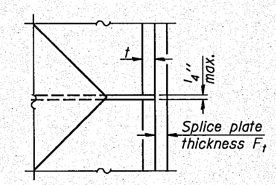

DETAIL D

Designation	F	F_t	F_w	W	W_t	W_w
HP 14x117	12 1/2"	1"	7/8"	7 3/4"	5/8"	1/2"
x102	12 1/2"	7/8"	3/4"	7 3/4"	5/8"	1/2"
x89	12 1/2"	3/4"	11/16"	7 3/4"	5/8"	1/2"
x73	12 1/2"	5/8"	9/16"	7 3/4"	5/8"	1/2"
HP 12x84	10"	7/8"	11/16"	6 1/2"	5/8"	1/2"
x74	10"	7/8"	11/16"	6 1/2"	5/8"	1/2"
x63	10"	5/8"	1/2"	6 1/2"	1/2"	3/8"
x53	10"	5/8"	1/2"	6 1/2"	1/2"	3/8"
HP 10x57	8"	3/4"	9/16"	5 1/4"	1/2"	3/8"
x42	8"	5/8"	9/16"	5 1/4"	1/2"	3/8"
HP 8x36	7"	5/8"	7/16"	4 1/4"	1/2"	3/8"

WELDED PLATE FIELD SPLICE

* Interrupt welds 1/4" from end of web and/or each flange.

** Remove portions of backup plates that extend outside the flanges.

*** Weld size per pile shoe manufacturer (5/16" min.).

Note:
The steel H-piles shall be according to AASHTO M270 Grade 50.

GRAEF 8501 W. Higgins Road; Suite 280 Chicago, Illinois 60631 (773) 399-0112

HP PILES

U.S. ROUTE 24 & IL ROUTE 9 OVER LA MARSH CREEK

STATION 337+89.89 STRUCTURE NO. 072-0228

SHEET NO. S30 OF 39 SHEETS	F.A.P. RTE.	SECTION	COUNTY	TOTAL SHEETS	SHEET NO.
	317	45BR-2	PEORIA	122	78
			CONTRACT NO. 68719		
	10-15-10	ILLINOIS	FED. AID PROJECT		

DESIGNED	J.Z.
CHECKED	E.E.J.
DRAWN	E.E.J.
CHECKED	J.A.Z.

F-HP 11-1-09

h:\job2010\2010304\cad\idot_structural\dgn\00\S30_HP_PILES.dgn
10/18/2010

STATE OF ILLINOIS
DEPARTMENT OF TRANSPORTATION

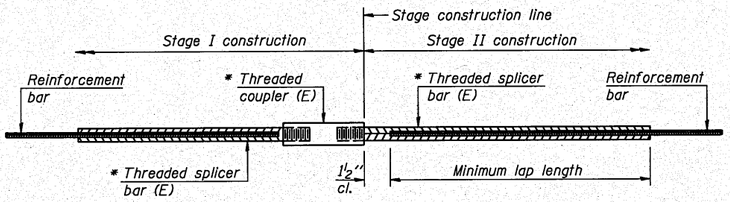

STANDARD BAR SPLICER ASSEMBLY

Minimum Lap Lengths						
Bar size to be spliced	Table 1	Table 2	Table 3	Table 4	Table 5	Table 6
3, 4	1'-5"	1'-11"	2'-1"	2'-4"	2'-7"	2'-11"
5	1'-9"	2'-5"	2'-7"	2'-11"	3'-3"	3'-8"
6	2'-1"	2'-11"	3'-1"	3'-6"	3'-10"	4'-5"
7	2'-9"	3'-10"	4'-2"	4'-8"	5'-2"	5'-10"
8	3'-8"	5'-1"	5'-5"	6'-2"	6'-9"	7'-8"
9	4'-7"	6'-5"	6'-10"	7'-9"	8'-7"	9'-8"

Table 1: Black bar, 0.8 Class C
Table 2: Black bar, Top bar lap, 0.8 Class C
Table 3: Epoxy bar, 0.8 Class C
Table 4: Epoxy bar, Top bar lap, 0.8 Class C
Table 5: Epoxy bar, Class C
Table 6: Epoxy bar, Top bar lap, Class C

Threaded splicer bar length = min. lap length + 1½" + thread length

* Epoxy not required on Bar Splicer Assembly components used in conjunction with black bars.

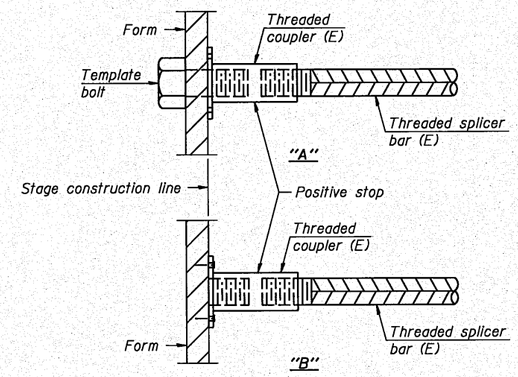

INSTALLATION AND SETTING METHODS

"A" : Set bar splicer assembly by means of a template bolt.
"B" : Set bar splicer assembly by nailing to wood forms or cementing to steel forms.
(E) : Indicates epoxy coating.

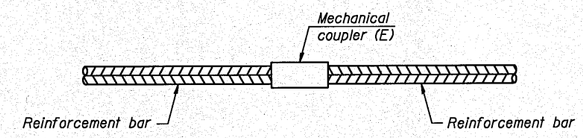

STANDARD MECHANICAL SPLICER

Location	Bar size	No. assemblies required
Columns	#9	288

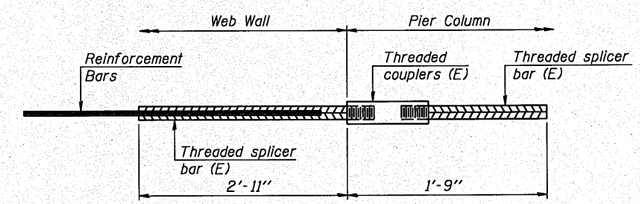

BAR SPLICER ASSEMBLY FOR #5 BAR PIER WEB WALL

No. required = 644

Location	Bar size	No. assemblies required	Table for minimum lap length
Deck	#5	758	5
Diaphragms	#6	16	4
Approach Slabs	#4	50	6
Approach Slabs	#5	172	5
Abutments	#8	24	6
Pier Cap Beams	#5	8	4
Pier Cap Beams	#9	16	6
Pier Cap Beams	#9	18	5

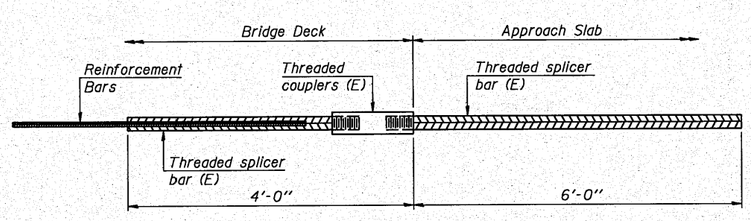

BAR SPLICER ASSEMBLY FOR #5 BAR ON INTEGRAL OR SEMI-INTEGRAL ABUTMENTS

No. required = 210

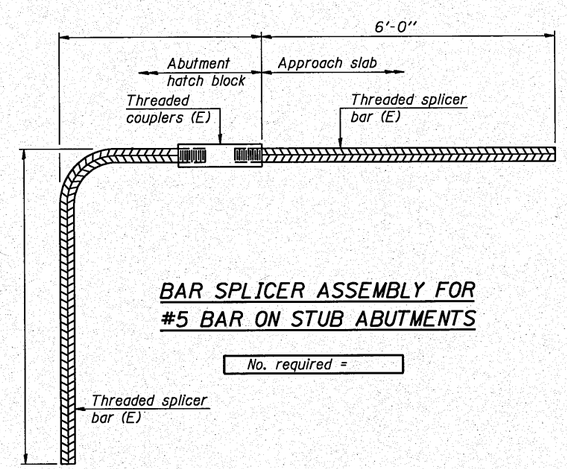

BAR SPLICER ASSEMBLY FOR #5 BAR ON STUB ABUTMENTS

No. required =

NOTES

Splicer bars shall be deformed with threaded ends and have a minimum 60 ksi yield strength.

All reinforcement shall be lapped and tied to the splicer bars.

Bar splicer assemblies shall be epoxy coated according to the requirements for reinforcement bars. See Section 508 of the Standard Specifications.

See special provision for Mechanical Splicers.

See approved list of bar splicer assemblies and mechanical splicers for alternatives.

DESIGNED	E.E.J.
CHECKED	J.A.Z.
DRAWN	E.E.J.
CHECKED	J.A.Z.

GRAEF
8501 W. Higgins Road; Suite 280
Chicago, Illinois 60631
(773) 399-0112

BAR SPLICER ASSEMBLY DETAILS

U.S. ROUTE 24 & IL ROUTE 9 OVER LA MARSH CREEK

STATION 337+89.89 STRUCTURE NO. 072-0228

SHEET NO. S31 OF 39 SHEETS	F.A.P. RTE.	SECTION	COUNTY	TOTAL SHEETS	SHEET NO.
	317	45BR-2	PEORIA	122	79
			CONTRACT NO. 68719		
	10-15-10	ILLINOIS	FED. AID PROJECT		

h:\jobs2010\2010301\cad\dot_structural\dgn\00\S31_BAR_SPLICERS.dgn
10/18/2010

STATE OF ILLINOIS
DEPARTMENT OF TRANSPORTATION

Illinois Department of Transportation
Division of Highways
GBG CONSULTANTS INC.

SOIL BORING LOG

Date 8/21/09

ROUTE FAP 317 (US24/IL 9) DESCRIPTION US 24/ IL9 Over LaMarsh Creek (Hollis Road District) LOGGED BY RJC

SECTION 45BR-2 LOCATION 40° 34' 52.9" N 89° 41' 39.6" W, SEC. 22, TWP. 7N, RNG. 7E, 4th PM, Latitude , Longitude

COUNTY Peoria DRILLING METHOD HSA HAMMER TYPE AUTO

STRUCT. NO. 072-0228
Station 337+89.89

BORING NO. B-1 East Abutment
Station 336+91.5
Offset 39.90ft RT
Ground Surface Elev. 465.00 ft

Surface Water Elev. - ft
Stream Bed Elev. - ft

Groundwater Elev.:
First Encounter 439.0 ft ▼
Upon Completion 442.0 ft ▽
After - Hrs. - ft

Description	Elev.	DEPTH (ft)	BLOWS (/6")	UCS Qu (tsf)	MOIST (%)
Pavement surface, asphalt 12-inches thick	464.00				
Gray CLAY LOAM (fill), trace gravel			2		
			4 4	2.9 B	13
			4		
			4 5		11
		-5			
			4		
			4 7	1.2 B	10
	456.00		4		
Brown and Gray CLAY (fill), trace gravel		-10	5 6	3.4 B	17
			2		
Trace organics			5 7	1.6 B	15
	451.50		5		
Gray CLAY (fill), trace gravel		-15	5 6	1.2 B	14
			7		
			7 8		16
	446.50		2		
Loose, Gray, Fine to Medium, SAND, trace gravel, organics, coal		-20	2 3		19
Loose, Gray, Fine to Medium, SAND, trace gravel, organics, coal (continued)	444.00		2		
Very Soft to Stiff Gray, LOAM, trace gravel, wood			WH 1	<0.25 B	24
			2		
		-25	4 3	1.1 B	19
Wood fragments	439.00 ▼		4		
Medium Dense to Loose Brown and Gray, Fine to Coarse, Wet SAND and gravel			5 6		14
			3		
		-30	3 3		14
			1		
	431.00		1		
Stiff to Very Hard Gray, Wet SHALEY CLAY (Highly Weathered Sandy Shale), trace gravel, organics (large pieces of wood at 34.5-feet)		-35	1 1	1.0 B	36
			100/1"		
					12
		-40			

The Unconfined Compressive Strength (UCS) Failure Mode is indicated by (B-Bulge, S-Shear, P-Penetrometer)
The SPT (N value) is the sum of the last two blow values in each sampling zone (AASHTO T206)

BBS, form 137 (Rev. 8-99)

Illinois Department of Transportation
Division of Highways
GBG CONSULTANTS INC.

SOIL BORING LOG

Date 8/21/09

ROUTE FAP 317 (US24/IL 9) DESCRIPTION US 24/ IL9 Over LaMarsh Creek (Hollis Road District) LOGGED BY RJC

SECTION 45BR-2 LOCATION 40° 34' 52.9" N 89° 41' 39.6" W, SEC. 22, TWP. 7N, RNG. 7E, 4th PM, Latitude , Longitude

COUNTY Peoria DRILLING METHOD HSA HAMMER TYPE AUTO

STRUCT. NO. 072-0228
Station 337+89.89

BORING NO. B-1 East Abutment
Station 336+91.5
Offset 39.90ft RT
Ground Surface Elev. 465.00 ft

Surface Water Elev. - ft
Stream Bed Elev. - ft

Groundwater Elev.:
First Encounter 439.0 ft ▼
Upon Completion 442.0 ft ▽
After - Hrs. - ft

Description	Elev.	DEPTH (ft)	BLOWS (/6")	UCS Qu (tsf)	MOIST (%)
			100/2"		
	422.50				12
Auger refusal encountered at 43-feet. Suspected Bedrock End of Boring		-45			
		-50			
		-55			
		-60			

The Unconfined Compressive Strength (UCS) Failure Mode is indicated by (B-Bulge, S-Shear, P-Penetrometer)
The SPT (N value) is the sum of the last two blow values in each sampling zone (AASHTO T206)

BBS, form 137 (Rev. 8-99)

DESIGNED	J.A.Z.
CHECKED	E.E.J.
DRAWN	S.R.K.
CHECKED	J.A.Z.

h:\jobs2010\2010304\cad\idot_structural\dgn\B0\S32_BORING_LOGS_I.dgn
10/18/2010

GRAEF 8501 W. Higgins Road, Suite 280 Chicago, Illinois 60631 (773) 399-0112

BORING LOGS I

U.S. ROUTE 24 & IL ROUTE 9 OVER LA MARSH CREEK

STATION 337+89.89 STRUCTURE NO. 072-0228

SHEET NO. S32 OF 39 SHEETS	F.A.P. RTE.	SECTION	COUNTY	TOTAL SHEETS	SHEET NO.
	317	45BR-2	PEORIA	122	80
			CONTRACT NO. 68719		
	10-15-10	ILLINOIS	FED. AID PROJECT		

STATE OF ILLINOIS
DEPARTMENT OF TRANSPORTATION

Illinois Department of Transportation
Division of Highways
GSG CONSULTANTS INC.

SOIL BORING LOG

Date 8/18/09

ROUTE FAP 317 (US24/IL 9) DESCRIPTION US 24/ IL9 Over LaMarsh Creek (Hollis Road District) LOGGED BY RJC

SECTION 45BR-2 LOCATION 40° 34' 52.6" N 89° 41' 40.4" W, SEC. 22, TWP. 7N, RNG. 7E, 4th PM, Latitude , Longitude

COUNTY Peoria DRILLING METHOD HSA HAMMER TYPE AUTO

STRUCT. NO. 072-0228
Station 337+89.89

BORING NO. B-2 East Pier
Station 337+59
Offset 48.50ft RT
Ground Surface Elev. 447.80 ft

Surface Water Elev. - ft
Stream Bed Elev. - ft

Groundwater Elev.:
First Encounter 440.3 ft
Upon Completion 441.8 ft
After 24 Hrs. 441.8 ft

Description	Elev.	DEPTH (ft)	BLOWS (/6")	UCS Qu (tsf)	MOIST (%)
Brown SILTY CLAY LOAM (fill), trace gravel	443.80		WH		33
Very Loose, Brown and Gray, Fine, SAND, trace gravel	443.50	-5	1 2	0.5 B	15
Loose Brown and Gray, Fine SAND, trace gravel	440.80		WH 2 4	1.8 B	16
Stiff Gray, Wet CLAY LOAM, trace gravel, coal seam at 7.5'	439.30		2		
Loose Brown, Medium, Wet SAND, trace gravel	436.80	-10	3 4		25
Very Loose Gray, Fine, Wet SAND, trace gravel 4" coarse sand seam at 12'	434.30		1 1 2		25
Very Loose Brown, Medium, Wet SAND, trace gravel	432.90	-15	2 1 1		21
Gray, Fine, Wet SAND	431.80				
Gray, Fine to Medium, Wet SILTY LOAM, trace gravel	431.30		8 7		17
Medium Dense Brown and Gray, Fine to Medium, Wet SAND and gravel	429.30		4		
Brown, Medium, Wet, SAND, trace gravel	428.80		1		19
Very Soft, Gray, Wet, CLAY, trace	428.30	-20	14 16	<.25 B	13 14
sand					
Hard, Gray, Dry, SILT *(continued)*	426.80			6.1 B	
Gray SHALE			26 70 100		10
Borehole continued with rock coring.		-25 -30 -35 -40			

The Unconfined Compressive Strength (UCS) Failure Mode is indicated by (B-Bulge, S-Shear, P-Penetrometer)
The SPT (N value) is the sum of the last two blow values in each sampling zone (AASHTO T206)

BBS, form 137 (Rev. 8-99)

Illinois Department of Transportation
Division of Highways
GSG Consultants

ROCK CORE LOG

Date 8/18/09

ROUTE FAP 317 (US24/IL 9) DESCRIPTION US 24/ IL9 Over LaMarsh Creek (Hollis Road District) LOGGED BY RJC

SECTION 45BR-2 LOCATION 40° 34' 52.6" N 89° 41' 40.4" W, SEC. 22, TWP. 7N, RNG. 7E, 4th PM, Latitude , Longitude

COUNTY Peoria CORING METHOD Rotary, Diamond Bit Core Barrel

STRUCT. NO. 072-0228
Station 337+89.89

CORING BARREL TYPE & SIZE NX 5' split barrel
Core Diameter 2 in
Top of Rock Elev. 426.80 ft
Begin Core Elev. 423.80 ft

BORING NO. B-2 East Pier
Station 337+59
Offset 48.50ft RT
Ground Surface Elev. 447.80 ft

Description	Elev.	DEPTH (ft)	CORE (#)	RECOVERY (%)	R.Q.D. (%)	CORE TIME (min/ft)	STRENGTH (tsf)
SHALE, Dark Gray, Damp, Thin Horizontal Lamination, Aphanitic, Highly Weathered, Very Soft Field Hardness (Core Run 1, RMR: 32, Rock Core Class IV: Poor Rock)	421.80	-25	1	75	0	10	
LIMESTONE (4" lens), Gray, Dry, Aphanitic, Slightly Weathered, Medium Field Hardness (Core Run 2, RMR: 52, Rock Class III: Fair Rock)			2	93	93	3	30.0
SHALE, Dark Gray, Damp, Thin Horizontal Lamination, Aphanitic, Moderately Weathered, Soft Field Hardness, Occasional Limestone Lenses <2" in Thickness							
Depth 26' 4", Moisture Content: 7.5%, Dry Density: 145.5 pcf Depth 29' 4", Moisture Content: 7.4%, Dry Density: 150.9 pcf Depth 35' 5", Moisture Content: 7.4%, Dry Density: 148.3 pcf		-30					94.2
(Core Run 3, RMR: 42, Rock Class III: Fair Rock)	411.80	-35	3	100	74	3	39.2
LIMESTONE, Gray, Damp, Aphanitic, Slightly Weathered, Medium Field Hardness (Core Run 4, RMR: 45, Rock Class III: Fair Rock) Depth 36' 7", Moisture Content: 9.0%, Dry Density: 144.7 pcf	410.30		4	100	65	3	354.8
SHALE, Dark Gray, Damp, Thin Horizontal Lamination, Aphanitic, Moderately Weathered, Soft Field Hardness, Occasional Limestone Lenses <2" in Thickness.	406.80	-40					
End of Boring							

Color pictures of the cores Yes
Cores will be stored for examination until 2/25/10
The "Strength" column represents the uniaxial compressive strength of the core sample (ASTM D-2938)

BBS, form 138 (Rev. 8-99)

DESIGNED	J.A.Z.
CHECKED	E.E.J.
DRAWN	S.R.K.
CHECKED	J.A.Z.

h:\jobs2010\2010301\cad\idot_structural\dgn\S00\S33_BORING_LOGS_II.dgn
10/15/2010

GRAEF 8501 W. Higgins Road; Suite 280 Chicago, Illinois 60631 (773) 399-0112

BORING LOGS II & ROCK CORE LOG
U.S. ROUTE 24 & IL ROUTE 9 OVER LA MARSH CREEK
STATION 337+89.89 STRUCTURE NO. 072-0228

SHEET NO. S33 OF 39 SHEETS	F.A.P. RTE.	SECTION	COUNTY	TOTAL SHEETS	SHEET NO.
	317	45BR-2	PEORIA	122	81
			CONTRACT NO. 68719		
	10-15-10	ILLINOIS	FED. AID PROJECT		

STATE OF ILLINOIS
DEPARTMENT OF TRANSPORTATION

Illinois Department of Transportation
Division of Highways
GBG CONSULTANTS INC.

SOIL BORING LOG

Date 8/25/09

ROUTE FAP 317 (US24/IL 9) DESCRIPTION US 24/ IL9 Over LaMarsh Creek (Hollis Road District) LOGGED BY RJC

SECTION 45BR-2 LOCATION 40° 34' 52.2" N 89° 41' 41.6" W, SEC. 22, TWP. 7N, RNG. 7E, 4th PM, Latitude , Longitude

COUNTY Peoria DRILLING METHOD HSA HAMMER TYPE AUTO

STRUCT. NO. 072-0228
Station 337+89.89

BORING NO. B-3 West Pier
Station 338+64
Offset 49.00ft RT
Ground Surface Elev. 447.50 ft

Surface Water Elev. - ft
Stream Bed Elev. - ft

Groundwater Elev.:
First Encounter 439.0 ft
Upon Completion 439.0 ft
After 24 Hrs. 439.5 ft

Description	Elev.	DEPTH (ft)	BLOWS (/6")	UCS Qu (tsf)	MOIST (%)
Brown SAND (fill), trace gravel, organics, concrete debris			5		
			16		26
			26		
			13		
			15		18
		-5	28		
Obstruction (Fill, concrete debris)					
	439.50				
Brown, Medium, SAND	439.00				
Very Loose Gray, Wet SANDY LOAM, trace gravel			2		
			1	<0.25	16
		-10	2	B	
	436.50				
Medium Dense Gray, Fine to Medium SAND, trace gravel			2		
			5		18
	435.00		6		
Gray CLAY					14
	434.00				
Gray, Coarse, SAND	433.50		16		17
Hard Gray SHALEY CLAY			47	5.9	14
		-15	51	B	
			10		
			20	5.9	19
			19	B	
			14		
			50	8.6	14
		-20	18	B	

Description	Elev.	DEPTH (ft)	BLOWS (/6")	UCS Qu (tsf)	MOIST (%)
Hard Gray SHALEY CLAY *(continued)*	426.00		100/5"		
Gray SHALE					17
Borehole continued with rock coring.					
		-25			
		-30			
		-35			
		-40			

The Unconfined Compressive Strength (UCS) Failure Mode is indicated by (B-Bulge, S-Shear, P-Penetrometer)
The SPT (N value) is the sum of the last two blow values in each sampling zone (AASHTO T206)

BBS, form 137 (Rev. 8-99)

Illinois Department of Transportation
Division of Highways
GBG Consultants

ROCK CORE LOG

Date 8/25/09

ROUTE FAP 317 (US24/IL 9) DESCRIPTION US 24/ IL9 Over LaMarsh Creek (Hollis Road District) LOGGED BY RJC

SECTION 45BR-2 LOCATION 40° 34' 52.2" N 89° 41' 41.6" W, SEC. 22, TWP. 7N, RNG. 7E, 4th PM, Latitude , Longitude

COUNTY Peoria CORING METHOD Rotary, Diamond Bit Core Barrel

STRUCT. NO. 072-0228
Station 337+89.89

CORING BARREL TYPE & SIZE NX 5' split barrel

Core Diameter 2 in
Top of Rock Elev. 426.00 ft
Begin Core Elev. 424.50 ft

BORING NO. B-3 West Pier
Station 338+64
Offset 49.00ft RT
Ground Surface Elev. 447.50 ft

Description	Elev.	DEPTH (ft)	CORE (#)	RECOVERY (%)	R.Q.D. (%)	CORE TIME (min/ft)	STRENGTH (tsf)
SHALE, Dark Gray, Damp, Thin Horizontal Lamination, Aphanitic, Slightly Weathered, Soft Field Hardness, Occasional Limestone Lenses <2" in thickness (Core Run 1, RMR: 49, Rock Class III: Fair Rock)			1	100	78	6	
Depth 23' 8", Moisture Content: 5.7%, Dry Density: 153.1 pcf		-25					142.6
3" Lens LIMESTONE, Gray, Dry, Aphanitic, Slightly Weathered, Medium Field Hardness							
Depth 27' 6", Moisture Content: 6.4%, Dry Density: 151.2 pcf							74.9
(Core Run 2, RMR: 47, Rock Class III: Fair Rock)			2	100	77	6	
Depth 29' 3", Moisture Content: 6.0%, Dry Density: 150.8 pcf		-30					128.5
Depth 31' 1", Moisture Content: 6.6%, Dry Density: 150.6 pcf							83.3
(Core Run 3, RMR: 43, Rock Class III: Fair Rock)			3	82	63	6	
		-35					
Depth 35' 2", Moisture Content: 7.3%, Dry Density: 149.2 pcf							113.8
	411.00						
LIMESTONE, Gray, Dry, Aphanitic, Slightly Weathered, Medium Field Hardness							
Depth 37' 7", Moisture Content: 4.7%, Dry Density: 155.1 pcf	409.50						362.2
End of Boring							
		-40					

Color pictures of the cores Yes
Cores will be stored for examination until 2/25/10
The "Strength" column represents the uniaxial compressive strength of the core sample (ASTM D-2938)

BBS, form 138 (Rev. 8-99)

DESIGNED J.A.Z.
CHECKED E.E.J.
DRAWN S.R.K.
CHECKED J.A.Z.

h:\jobs2010\2010304\cad\dot_structural\dgn\09\S34_BORING_LOGS_III.dgn
10/18/2010

GRaEF 8501 W. Higgins Road; Suite 280 Chicago, Illinois 60631 (773) 399-0112

BORING LOGS III & ROCK CORE LOG
U.S. ROUTE 24 & IL ROUTE 9 OVER LA MARSH CREEK
STATION 337+89.89 STRUCTURE NO. 072-0228

SHEET NO. S34 OF 39 SHEETS	F.A.P. RTE.	SECTION	COUNTY	TOTAL SHEETS	SHEET NO.
	317	45BR-2	PEORIA	122	82
			CONTRACT NO. 68719		
	10-15-10	ILLINOIS	FED. AID PROJECT		

STATE OF ILLINOIS
DEPARTMENT OF TRANSPORTATION

Illinois Department of Transportation
Division of Highways
GBG CONSULTANTS INC.

SOIL BORING LOG

Date 8/21/09

ROUTE FAP 317 (US24/IL 9) DESCRIPTION US 24/ IL9 Over LaMarsh Creek (Hollis Road District) LOGGED BY RJC

SECTION 45BR-2 LOCATION 40° 34' 51.8" N 89° 41' 42.3" W, SEC. 22, TWP. 7N, RNG. 7E, 4th PM, Latitude , Longitude

COUNTY Peoria DRILLING METHOD HSA HAMMER TYPE AUTO

STRUCT. NO. 072-0228
Station 337+89.89

BORING NO. B-4 West Abutment
Station 339+28
Offset 39.90ft RT
Ground Surface Elev. 467.60 ft

Surface Water Elev. - ft
Stream Bed Elev. - ft

Groundwater Elev.:
First Encounter 441.6 ft ▼
Upon Completion None ft
After - Hrs. - ft

Description	Elev.	DEPTH (ft)	BLOWS (/6")	UCS Qu (tsf)	MOIST (%)
Pavement surface, asphalt 12-inches thick	466.60				
Brown and gray CLAY LOAM (fill), trace gravel			6		
			5	2.1	10
			5	B	
	464.10				
Brown SAND (fill), trace gravel			1		
			2		15
		-5	4		
	461.10		3		
Gray LOAM (fill), trace gravel			5		10
			8		
	459.10				
Brown CLAY LOAM (fill), trace gravel			4		
			5	1.4	15
		-10	7	B	
	456.60				
Gray CLAY LOAM (fill), and gravel			4		
			5	2.0	16
			12	B	
	454.10				
Gray CLAY LOAM (fill), trace gravel			4		
			6	2.9	12
		-15	6	B	
Brown SAND seam			2		
			3	1.3	18
			7	B	
	449.10				
Stiff Brown SILTY LOAM, trace gravel			6		
			7		13
		-20	8		
	446.60				
Very Stiff, Gray, CLAY, trace gravel, organics			4		17
	445.60		6	2.0	
Gray, Medium SAND			8	B	18
	443.60		1		
Loose Brown, Coarse SAND			3		7
		-25	5		
	441.60 ▼				
Loose Brown and Gray, Wet GRAVEL, and sand			1		
			3		17
			5		
	438.10		1		
Gray, Wet SILTY LOAM			WH		26
		-30	1		
	434.10				
Soft to Very Hard Gray, Dry SHALE			6		
			6		25
		-35	17		
	429.80		100/3"		
Auger refusal encountered at 37.8-feet Suspected Bedrock End of Boring		-40			

The Unconfined Compressive Strength (UCS) Failure Mode is indicated by (B-Bulge, S-Shear, P-Penetrometer)
The SPT (N value) is the sum of the last two blow values in each sampling zone (AASHTO T206)

BBS, form 137 (Rev. 8-99)

DESIGNED J.A.Z.
CHECKED E.E.J.
DRAWN S.R.K.
CHECKED J.A.Z.

h:\jobs2010\2010304\cad\dot_structural\dgn\009\S35_BORING_LOGS_IV.dgn
10/18/2010

GRAEF 8501 W. Higgins Road; Suite 280 Chicago, Illinois 60631 (773) 399-0112

BORING LOGS IV

U.S. ROUTE 24 & IL ROUTE 9 OVER LA MARSH CREEK

STATION 337+89.89 STRUCTURE NO. 072-0228

SHEET NO. S35 OF 39 SHEETS	F.A.P. RTE.	SECTION	COUNTY	TOTAL SHEETS	SHEET NO.
	317	45BR-2	PEORIA	122	83
			CONTRACT NO. 68719		
	10-15-10	ILLINOIS	FED. AID PROJECT		

STATE OF ILLINOIS
DEPARTMENT OF TRANSPORTATION

Illinois Department of Transportation
Division of Highways
GSG CONSULTANTS INC.

SOIL BORING LOG

Date 8/20/09

ROUTE FAP 317 (US24/IL 9) DESCRIPTION US 24/ IL9 Over LaMarsh Creek (Hollis Road District) LOGGED BY RJC

SECTION 45BR-2 LOCATION 40° 34' 52.4" N 89° 41' 38.6" W, SEC. 22, TWP. 7N, RNG. 7E, 4th PM, Latitude , Longitude

COUNTY Peoria DRILLING METHOD HSA HAMMER TYPE AUTO

STRUCT. NO. 072-0228
Station 337+89.89

BORING NO. B-5 East Abutment
Station 336+42
Offset 38.90ft LT
Ground Surface Elev. 464.40 ft

Surface Water Elev. - ft
Stream Bed Elev. - ft

Groundwater Elev.:
First Encounter 434.4 ft ▼
Upon Completion 434.4 ft ▽
After - Hrs. - ft

Description	Elev.	DEPTH (ft)	BLOWS (/6")	UCS Qu (tsf)	MOIST (%)
Pavement surface, asphalt 12-inches thick	463.40				
CLAY LOAM (fill), trace gravel			10		
			6		8
			6		
	460.90				
Brown, Medium SAND (fill), trace gravel			7		
			5		6
		-5	7		
			WH		
			WH		
			5		
	455.90				
Brown and Gray CLAY LOAM (fill), trace gravel	455.40		5		12
			5		9
Brown and Gray SAND (fill), and gravel		-10	7		
	453.40				
Brown SANDY CLAY LOAM (fill), trace gravel			2		
			6		11
			11		
	450.90				
Gray, Fine SAND, trace gravel	450.40		3		12
			5	4.0	22
Very Stiff to Soft Gray SILTY CLAY LOAM, trace gravel, coal		-15	7	B	
			1		
			1	0.3	27
			2	B	
	445.90				
			WH		
			1	0.3	31
		-20	2	B	
Very Soft Gray, Moist CLAY, trace gravel, 1" sand seam at 18.8' *(continued)*	443.40		WH		
Soft, Gray, Moist, SANDY LOAM, trace gravel	442.40		WH	0.3	27
			2	B	27
Very Soft Gray, Moist CLAY, trace sand, gravel	440.90		WH		
Very Soft Gray, Moist LOAM, trace gravel			WH		32
		-25	WH		
			WH		
Organics			WH		29
			WH		
	436.40				
Very Loose to Medium Dense Gray, Coarse, Moist SAND, trace gravel			WH		
			WH		29
Wet at 30'		▼30	2		
			3		
			3		16
		-35	7		
			6		14
	424.90		7		
Gray, Hard, SANDY SHALE		-40	93		11

The Unconfined Compressive Strength (UCS) Failure Mode is indicated by (B-Bulge, S-Shear, P-Penetrometer)
The SPT (N value) is the sum of the last two blow values in each sampling zone (AASHTO T206)

BBS, form 137 (Rev. 8-99)

Illinois Department of Transportation
Division of Highways
GSG CONSULTANTS INC.

SOIL BORING LOG

Date 8/20/09

ROUTE FAP 317 (US24/IL 9) DESCRIPTION US 24/ IL9 Over LaMarsh Creek (Hollis Road District) LOGGED BY RJC

SECTION 45BR-2 LOCATION 40° 34' 52.4" N 89° 41' 38.6" W, SEC. 22, TWP. 7N, RNG. 7E, 4th PM, Latitude , Longitude

COUNTY Peoria DRILLING METHOD HSA HAMMER TYPE AUTO

STRUCT. NO. 072-0228
Station 337+89.89

BORING NO. B-5 East Abutment
Station 336+42
Offset 38.90ft LT
Ground Surface Elev. 464.40 ft

Surface Water Elev. - ft
Stream Bed Elev. - ft

Groundwater Elev.:
First Encounter 434.4 ft ▼
Upon Completion 434.4 ft ▽
After - Hrs. - ft

Description	Elev.	DEPTH (ft)	BLOWS (/6")	UCS Qu (tsf)	MOIST (%)
Gray, Hard, SANDY SHALE *(continued)*					
			20		
			60/2"		
	419.90				
Auger refusal encountered at 44.5-feet. Suspected Bedrock End of Boring		-45			
		-50			
		-55			
		-60			

The Unconfined Compressive Strength (UCS) Failure Mode is indicated by (B-Bulge, S-Shear, P-Penetrometer)
The SPT (N value) is the sum of the last two blow values in each sampling zone (AASHTO T206)

BBS, form 137 (Rev. 8-99)

DESIGNED	J.A.Z.
CHECKED	E.E.J.
DRAWN	S.R.K.
CHECKED	J.A.Z.

GRAEF 8501 W. Higgins Road; Suite 280 Chicago, Illinois 60631 (773) 399-0112

BORING LOGS V

U.S. ROUTE 24 & IL ROUTE 9 OVER LA MARSH CREEK

STATION 337+89.89 STRUCTURE NO. 072-0228

SHEET NO.	F.A.P. RTE.	SECTION	COUNTY	TOTAL SHEETS	SHEET NO.
S36 OF 39 SHEETS	317	45BR-2	PEORIA	122	84
			CONTRACT NO. 68719		
	10-15-10	ILLINOIS	FED. AID PROJECT		

h:\jobs2010\2010301\cad\dot_structural\dgn\00\S36_BORING_LOGS_V.dgn
10/18/2010

STATE OF ILLINOIS
DEPARTMENT OF TRANSPORTATION

Illinois Department of Transportation
Division of Highways
GBG CONSULTANTS INC.

SOIL BORING LOG

Date 8/24/09

ROUTE FAP 317 (US24/IL 9) DESCRIPTION US 24/ IL9 Over LaMarsh Creek (Hollis Road District) LOGGED BY RJC

SECTION 45BR-2 LOCATION 40° 34' 52.0" N 89° 41' 39.3" W, SEC. 22, TWP. 7N, RNG. 7E, 4th PM, Latitude , Longitude

COUNTY Peoria DRILLING METHOD HSA HAMMER TYPE AUTO

STRUCT. NO. 072-0228
Station 337+89.89

BORING NO. B-6 East Pier
Station 337+09
Offset 48.90ft LT
Ground Surface Elev. 450.90 ft

Surface Water Elev. - ft
Stream Bed Elev. - ft

Groundwater Elev.:
First Encounter 439.4 ft
Upon Completion 439.4 ft
After 24 Hrs. 442.9 ft

Description	Elev.	DEPTH (ft)	BLOWS (/6")	UCS Qu (tsf)	MOIST (%)
Brown SILTY LOAM (fill), trace gravel, organics			2		
			1		27
			2		
	446.90		2		
Brown SILTY CLAY LOAM (fill) trace gravel, obstructions (concrete debris)		-5	2	2.7	15
			6	B	
			8		
			2		12
			1		
			2		
			2		23
		-10	2		
	439.90				
Brown, Fine to Medium, Moist, SAND, trace gravel	439.40		1		28
			1		18
Loose Brown and Gray, Fine to Medium, Wet SAND, and gravel, Coal Seam at 14.5'	437.40		3		
			3		
Loose Brown, Medium Grained, Wet SAND		-15	3		18
			4		
			2		21
	433.90		3		
Very Loose Brown and Gray, Wet GRAVEL, and sand, trace clay			3		17
			2		
			1		17
		-20	2		
	429.90				
Brown, Medium, Wet SAND, trace gravel	429.40		7		24
			2		15
			4		
Loose Brown and Gray, Wet GRAVEL, trace sand, clay	427.40				
Brown, Medium, SAND	426.90		26		
Hard, Gray, SHALE Borehole continued with rock coring.			30		15
		-25	100/0"		
		-30			
		-35			
		-40			

The Unconfined Compressive Strength (UCS) Failure Mode is indicated by (B-Bulge, S-Shear, P-Penetrometer)
The SPT (N value) is the sum of the last two blow values in each sampling zone (AASHTO T206)

BBS, form 137 (Rev. 8-99)

Illinois Department of Transportation
Division of Highways
GBG Consultants

ROCK CORE LOG

Date 8/24/09

ROUTE FAP 317 (US24/IL 9) DESCRIPTION US 24/ IL9 Over LaMarsh Creek (Hollis Road District) LOGGED BY RJC

SECTION 45BR-2 LOCATION 40° 34' 52.0" N 89° 41' 39.3" W, SEC. 22, TWP. 7N, RNG. 7E, 4th PM, Latitude , Longitude

COUNTY Peoria CORING METHOD Rotary, Diamond Bit Core Barrel

STRUCT. NO. 072-0228
Station 337+89.89

CORING BARREL TYPE & SIZE NX 5' split barrel
Core Diameter 2 in
Top of Rock Elev. 426.90 ft
Begin Core Elev. 426.40 ft

BORING NO. B-6 East Pier
Station 337+09
Offset 48.90ft LT
Ground Surface Elev. 450.90 ft

Description	Elev.	DEPTH (ft)	CORE (#)	RECOVERY (%)	R.Q.D. (%)	CORE TIME (min/ft)	STRENGTH (tsf)
SHALE, Dark Gray, Damp, Thin Horizontal Lamination, Aphanitic, Highly Weathered, Very Soft Field Hardness (Core Run 1, RMR: 49, Rock Class III: Fair Rock)	425.40	-25	1	100	80	6	
SANDY SHALE, Gray, Damp, Aphanitic, Slightly Weathered, Medium Field Hardness							
Depth 27' 2", Moisture Content: 6.2%, Dry Density: 153.3 pcf							81.3
Depth 28' 5", Moisture Content: 5.2%, Dry Density: 155.1 pcf							97.6
Depth 29', Moisture Content: 5.9%, Dry Density: 154.2 pcf	421.40						130.4
SHALE, Dark Gray, Damp, Thin Horizontal Lamination, Aphanitic, Slightly Weathered, Soft Field Hardness, Occasional Limestone Lenses <2" in Thickness. (Core Run 2, RMR: 47, Rock Class III: Fair Rock)		-30	2	100	89	6	96.6
Depth 30.5', Moisture Content: 7.2%, Dry Density: 152.8 pcf							
3.5" Lens LIMESTONE, Gray, Damp, Aphanitic, Slightly Weathered, Medium Field Hardness							
Depth 34', Moisture Content: 6.4%, Dry Density: 152.0 pcf							104.8
(Core Run 3, RMR: 47, Rock Class III: Fair Rock)		-35	3	100	70	6	
3" Lens LIMESTONE, Gray, Damp, Aphanitic, Slightly Weathered, Medium Field Hardness							
Depth 37', Moisture Content: 6.3%, Dry Density: 152.0 pcf							163.6
3" Lens SANDY SHALE, Gray, Damp, Aphanitic, Slightly Weathered, Medium Field Hardness	411.40						
End of Boring		-40					

Color pictures of the cores Yes
Cores will be stored for examination until 2/25/10
The "Strength" column represents the uniaxial compressive strength of the core sample (ASTM D-2938)

BBS, form 138 (Rev. 8-99)

DESIGNED	J.A.Z.
CHECKED	E.E.J.
DRAWN	S.R.K.
CHECKED	J.A.Z.

GRAEF 8501 W. Higgins Road; Suite 280 Chicago, Illinois 60631 (773) 399-0112

BORING LOGS VI & ROCK CORE LOG

U.S. ROUTE 24 & IL ROUTE 9 OVER LA MARSH CREEK

STATION 337+89.89 STRUCTURE NO. 072-0228

SHEET NO. S37 OF 39 SHEETS	F.A.P. RTE.	SECTION	COUNTY	TOTAL SHEETS	SHEET NO.
	317	45BR-2	PEORIA	122	85
			CONTRACT NO. 68719		
	10-15-10	ILLINOIS	FED. AID PROJECT		

h:\jobs2010\2010301\cad\idot_structural\dgn\00\S37_BORING_LOGS_VI.dgn
10/18/2010

STATE OF ILLINOIS
DEPARTMENT OF TRANSPORTATION

Illinois Department of Transportation
Division of Highways
GSG CONSULTANTS INC.

SOIL BORING LOG

Date 8/25/09

ROUTE FAP 317 (US24/IL 9) DESCRIPTION US 24/ IL9 Over LaMarsh Creek (Hollis Road District) LOGGED BY RJC

SECTION 45BR-2 LOCATION 40° 34' 51.5" N 89° 41' 40.5" W, SEC. 22, TWP. 7N, RNG. 7E, 4th PM, Latitude , Longitude

COUNTY Peoria DRILLING METHOD HSA HAMMER TYPE AUTO

STRUCT. NO. 072-0228
Station 337+89.89

BORING NO. B-7 West Pier
Station 338+12
Offset 48.90ft LT
Ground Surface Elev. 447.50 ft

Surface Water Elev. - ft
Stream Bed Elev. - ft

Groundwater Elev.:
First Encounter 438.5 ft
Upon Completion 438.5 ft
After 24 Hrs. 442.5 ft

Description	Elev.	DEPTH (ft)	BLOWS (/6")	UCS Qu (tsf)	MOIST (%)
Brown CLAY LOAM (fill), trace organics, sand lenses			3		
			2	2.2	33
			3	B	
			3		
Loose Brown, Fine to Medium SAND	443.50	-5	1		18
			4		
	441.00		2		18
Very Stiff, Gray, CLAY LOAM, organics	440.50		2	3.9	24
			4	B	
Brown, Medium SAND	438.50		2		
Gray, Fine to Medium, Wet, SAND, trace gravel, organics	437.50	-10	2		20
			1		
Very Soft Gray, Wet SILTY CLAY LOAM			2		
			2	<0.25	43
			4	B	
	433.50		8		
Loose Gray, Wet GRAVEL, trace sand		-15	4		13
			4		
	431.50				
Gray, Coarse Wet SAND, trace gravel			2		17
	430.50		2		
Gray, Wet GRAVEL, trace sand			5		15
	429.00				
Hard Gray SHALEY CLAY			13		
		-20	30	7.1	15
			20	B	
	426.50				
Soft to Very Hard Gray SHALE	425.90		100/5"		12
Borehole continued with rock coring.		-25			
		-30			
		-35			
		-40			

The Unconfined Compressive Strength (UCS) Failure Mode is indicated by (B-Bulge, S-Shear, P-Penetrometer)
The SPT (N value) is the sum of the last two blow values in each sampling zone (AASHTO T206)

BBS, form 137 (Rev. 8-99)

Illinois Department of Transportation
Division of Highways
GSG Consultants

ROCK CORE LOG

Date 8/25/09

ROUTE FAP 317 (US24/IL 9) DESCRIPTION US 24/ IL9 Over LaMarsh Creek (Hollis Road District) LOGGED BY RJC

SECTION 45BR-2 LOCATION 40° 34' 51.5" N 89° 41' 40.5" W, SEC. 22, TWP. 7N, RNG. 7E, 4th PM, Latitude , Longitude

COUNTY Peoria CORING METHOD Rotary, Diamond Bit Core Barrel

STRUCT. NO. 072-0228
Station 337+89.89

CORING BARREL TYPE & SIZE NX 5' split barrel
Core Diameter 2 in
Top of Rock Elev. 426.50 ft
Begin Core Elev. 424.50 ft

BORING NO. B-7 West Pier
Station 338+12
Offset 48.90ft LT
Ground Surface Elev. 447.50 ft

Description	Elev.	DEPTH (ft)	CORE (#)	RECOVERY (%)	R.Q.D. (%)	CORE TIME (min/ft)	STRENGTH (tsf)
SHALE, Dark Gray, Damp, Thin Horizontal Lamination, Aphanitic, Highly Weathered, Very Soft Field Hardness (Core Run 1, RMR: 43, Rock Class III: Fair Rock)	424.00		1	82	67	3	
SANDY SHALE, Gray, Dry, Aphanitic, Slightly Weathered, Medium Field Hardness		-25					
Depth 25' 4", Moisture Content: 4.4%, Dry Density: 155.6 pcf							171.2
3" Lens LIMESTONE, Gray, Dry, Aphanitic, Slightly Weathered, Medium Field Hardness Very soft clay or shale lens at 26'-2"							
Depth 27' 6", Moisture Content: 6.0%, Dry Density: 154.0 pcf	419.50						122.5
SHALE, Dark Gray, Damp, Thin Horizontal Lamination, Aphanitic, Moderately Weathered, Soft Field Hardness, Occasional Limestone Lenses <2" in Thickness (Core Run 2, RMR: 38, Rock Class IV: PoorRock)			2	88	49	5	
Depth 29' 9", Moisture Content: 7.2%, Dry Density: 152.5 pcf		-30					88.1
	414.50						
SANDY SHALE, Gray, Damp, Aphanitic, Slightly Weathered, Medium, Occasional Limestone Lenses <2" in Thickness (Core Run 3, RMR: 45, Rock Class III: Fair Rock)			3	100	51	7	
		-35					
Depth 37' 7", Moisture Content: 7.1%, Dry Density: 149.0 pcf	409.50						295.7
End of Boring							
		-40					

Color pictures of the cores Yes
Cores will be stored for examination until 2/25/10
The "Strength" column represents the uniaxial compressive strength of the core sample (ASTM D-2938)

BBS, form 138 (Rev. 8-99)

DESIGNED	J.A.Z.
CHECKED	E.E.J.
DRAWN	S.R.K.
CHECKED	J.A.Z.

GRAEF 8501 W. Higgins Road; Suite 280 Chicago, Illinois 60631 (773) 399-0112

BORING LOGS VII & ROCK CORE LOG
U.S. ROUTE 24 & IL ROUTE 9 OVER LA MARSH CREEK
STATION 337+89.89 STRUCTURE NO. 072-0228

SHEET NO. S38 OF 39 SHEETS	F.A.P. RTE.	SECTION	COUNTY	TOTAL SHEETS	SHEET NO.
	317	45BR-2	PEORIA	122	86
			CONTRACT NO. 68719		
	10-15-10	ILLINOIS	FED. AID PROJECT		

h:\jobs2010\2010314\cad\dot_structural\dgn\00\S38_BORING_LOGS_VII.dgn
10/15/2010

STATE OF ILLINOIS
DEPARTMENT OF TRANSPORTATION

Illinois Department of Transportation
Division of Highways
GBG CONSULTANTS INC.

SOIL BORING LOG

Date 8/20/09

ROUTE FAP 317 (US24/IL 9) DESCRIPTION US 24/ IL9 Over LaMarsh Creek (Hollis Road District) LOGGED BY RJC

SECTION 45BR-2 LOCATION 40° 34' 51.3" N 89° 41' 41.4" W, SEC. 22, TWP. 7N, RNG. 7E, 4th PM, Latitude , Longitude

COUNTY Peoria DRILLING METHOD HSA HAMMER TYPE AUTO

STRUCT. NO. 072-0228
Station 337+89.89

BORING NO. B-8 West Abutment
Station 338+90
Offset 38.40ft LT
Ground Surface Elev. 467.00 ft

Surface Water Elev. - ft
Stream Bed Elev. - ft

Groundwater Elev.:
First Encounter 441.0 ft ▼
Upon Completion 449.0 ft ▽
After - Hrs. - ft

Description	Elev.	DEPTH (ft)	BLOWS (/6")	UCS Qu (tsf)	MOIST (%)
Pavement surface, asphalt 12-inches thick	466.00				
Brown and Grey LOAM (fill), trace gravel			12		
			5 6		10
	463.50				
Brown SILTY CLAY LOAM (fill), trace gravel			1		
			2 4		20
		-5			
			1		
			2 3	1.8 B	22
			1		
			2 4	1.5 B	26
		-10			
	456.00				
Brown SAND (fill), trace gravel			4		
			4 2		9
			WH		
			WH 5		11
		-15			
			6		
			7 5		14
		▽			
			6		
	447.50		7 13		10
		-20			
Brown, Fine to Medium SANDY CLAY LOAM, trace gravel *(continued)*	445.50		4		
Very Stiff Brown CLAY LOAM, trace gravel, organics at 21.5'			5 7	2.3 B	15
			4		
	442.50		5 9	1.5 B	
Gray, Coarse SAND, trace gravel, organics		-25			
	441.00 ▼				
Medium Dense to Loose Brown and Gray, Wet GRAVEL, and sand, trace clay, organics			2		
			7 4		19
			5		
			4 3		15
		-30			
	433.00		4		16
Soft to Very Hard Gray, Dry SHALE			8 46		16
		-35			
	428.50				
Very Hard Gray SANDY SHALE			100/4"		
	427.00	-40			12

The Unconfined Compressive Strength (UCS) Failure Mode is indicated by (B-Bulge, S-Shear, P-Penetrometer)
The SPT (N value) is the sum of the last two blow values in each sampling zone (AASHTO T206)

BBS, form 137 (Rev. 8-99)

Illinois Department of Transportation
Division of Highways
GBG CONSULTANTS INC.

SOIL BORING LOG

Date 8/20/09

ROUTE FAP 317 (US24/IL 9) DESCRIPTION US 24/ IL9 Over LaMarsh Creek (Hollis Road District) LOGGED BY RJC

SECTION 45BR-2 LOCATION 40° 34' 51.3" N 89° 41' 41.4" W, SEC. 22, TWP. 7N, RNG. 7E, 4th PM, Latitude , Longitude

COUNTY Peoria DRILLING METHOD HSA HAMMER TYPE AUTO

STRUCT. NO. 072-0228
Station 337+89.89

BORING NO. B-8 West Abutment
Station 338+90
Offset 38.40ft LT
Ground Surface Elev. 467.00 ft

Surface Water Elev. - ft
Stream Bed Elev. - ft

Groundwater Elev.:
First Encounter 441.0 ft ▼
Upon Completion 449.0 ft ▽
After - Hrs. - ft

Description	DEPTH (ft)	BLOWS (/6")	UCS Qu (tsf)	MOIST (%)
Auger refusal encountered at 40-feet Suspected Bedrock End of Boring				
	-45			
	-50			
	-55			
	-60			

The Unconfined Compressive Strength (UCS) Failure Mode is indicated by (B-Bulge, S-Shear, P-Penetrometer)
The SPT (N value) is the sum of the last two blow values in each sampling zone (AASHTO T206)

BBS, form 137 (Rev. 8-99)

DESIGNED	J.A.Z.
CHECKED	E.E.J.
DRAWN	S.R.K.
CHECKED	J.A.Z.

h:\jobs2010\2010301\cad\dot_structural\dgn\02\S39_BORING_LOGS_VIII.dgn
10/18/2010

GRAEF 8501 W. Higgins Road; Suite 280 Chicago, Illinois 60631 (773) 399-0112

BORING LOGS VIII

U.S. ROUTE 24 & IL ROUTE 9 OVER LA MARSH CREEK

STATION 337+89.89 STRUCTURE NO. 072-0228

SHEET NO. S39 OF 39 SHEETS	F.A.P. RTE.	SECTION	COUNTY	TOTAL SHEETS	SHEET NO.
	317	45BR-2	PEORIA	122	87
			CONTRACT NO. 68719		
	10-15-10	ILLINOIS	FED. AID PROJECT		

SLOPE STEPS DETAIL

TYPICAL CROSS-SECTION EMBANKMENT
CONSTRUCTION ON SIDEHILL

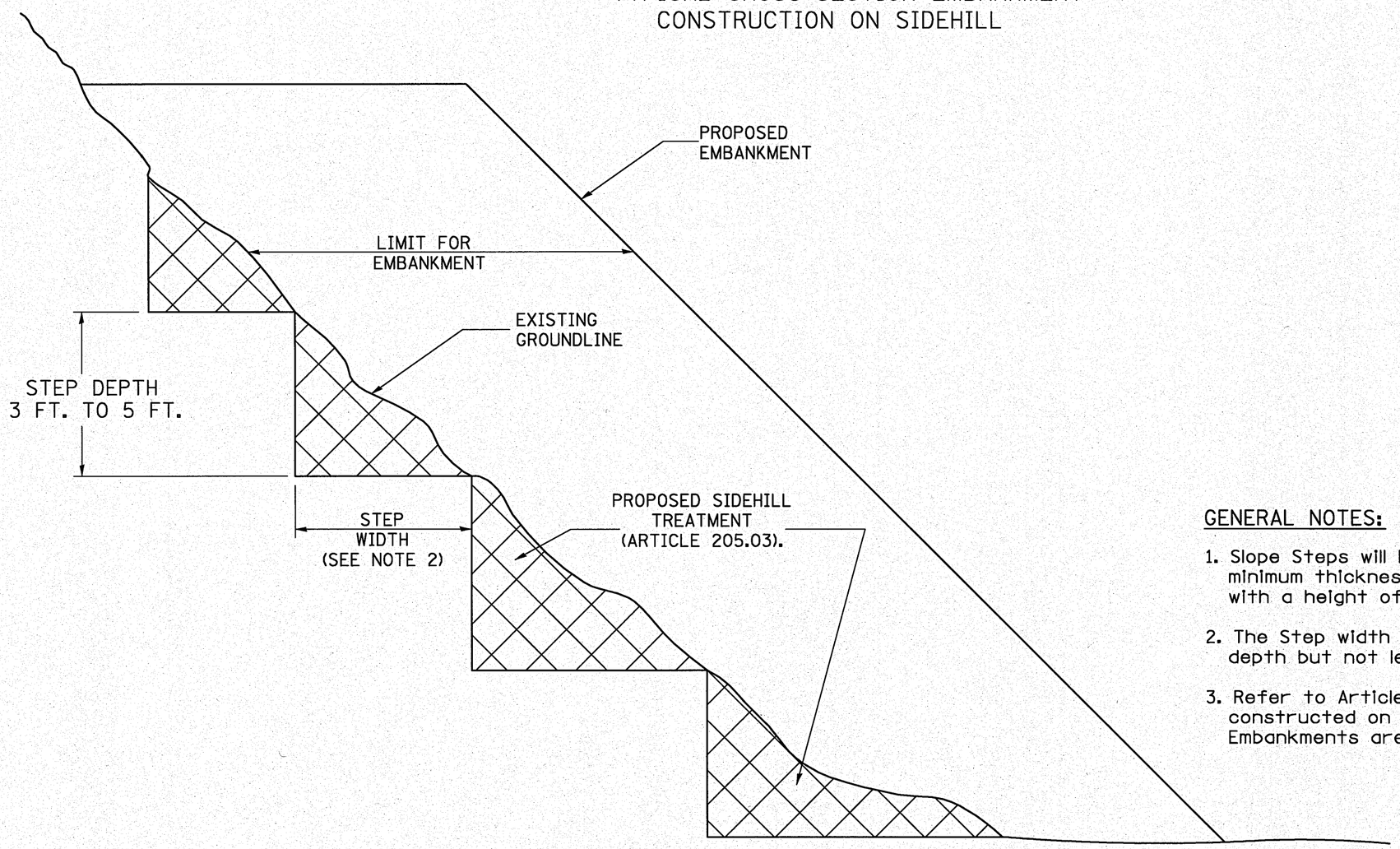

GENERAL NOTES:

1. Slope Steps will be required for all 12(300) minimum thickness "silver fills" and on a fills with a height of 10'(3.0m).
2. The Step width shall be twice the Step depth but not less than 6 feet.
3. Refer to Article 205.03 for Embankment to be constructed on Hillside or Slopes, or if existing Embankments are to be widened.

REPLACEMENT MATERIAL:

STANDARD EMBANKMENT
(IN ACCORDANCE WITH
205 OF THE STANDARD SPECIFACATION).

SIDE SLOPE DETAILS

All dimensions are in inches (millimeters) unless otherwise noted.

FILE NAME = ©FILEL©	USER NAME = ©USER©	DESIGNED ST	REVISED -	STATE OF ILLINOIS DEPARTMENT OF TRANSPORTATION	DISTRICT 4 STANDARDS US-24 OVER LAMARSH CREEK			F.A.P. RTE.	SECTION	COUNTY	TOTAL SHEETS	SHEET NO.
		DRAWN ST	REVISED -					317	45BR-2	PEORIA	122	88
	PLOT SCALE = ©SCALE©	CHECKED FML	REVISED -						205001	CONTRACT NO. 68719		
	PLOT DATE = ©DATE©	DATE 10-15-2010	REVISED -		SCALE: N.T.S.	SHEET NO. 1 OF 19 SHEETS	STA. TO STA.	FED. ROAD DIST. NO.	ILLINOIS	FED. AID PROJECT		

PLAN — SURVEYED / PLOTTED / ALIGNMENT CHECKED / PLANS PREPARED / CADD FILE NAME / NOTE BOOK NO. / BY / DATE

PROFILE — SURVEYED / PLOTTED / GRADES CHECKED / PLANS PREPARED / STRUCTURE NOTAYNS CHKD / NOTE BOOK NO. / BY / DATE

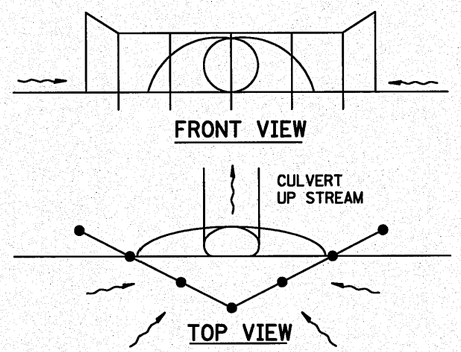

UPSTREAM PIPE CULVERT EROSION CONTROL

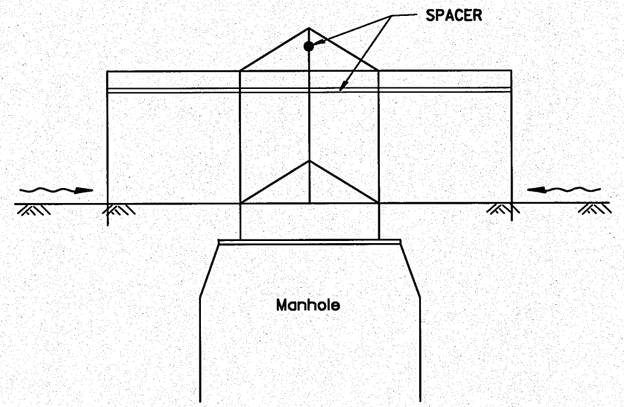

SIDE VIEW
A-A

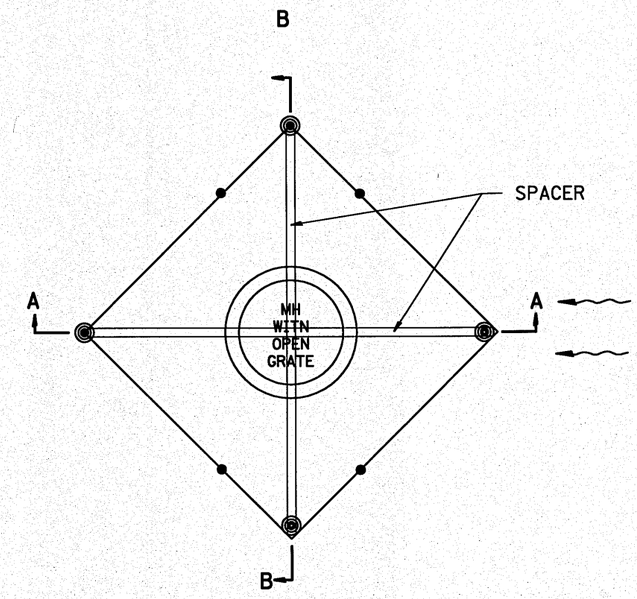

TOP VIEW

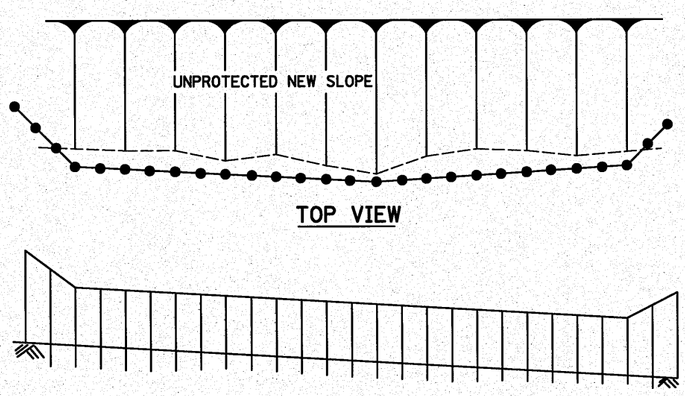

TOP VIEW

FRONT VIEW

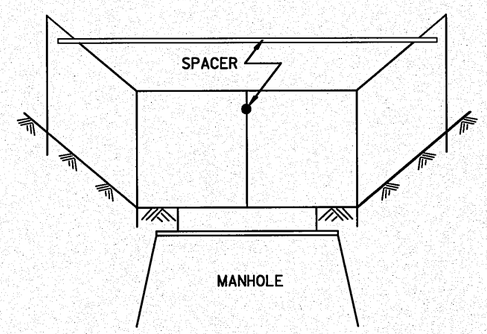

Front View
B-B

EROSION CONTROL
AT
OPEN GRATE MAN HOLE

GENERAL NOTES:

1. This work shall be performed in accordance with Sections 280 & 1081, of the Standard Specifications.
2. Additional Timber or Metal Post shall be installed, as needed.

TYPICAL APPLICATION OF SILT FILTER FENCE

All dimensions are in inches (millimeters) unless otherwise noted.

FILE NAME = ©FILEL©	USER NAME = ©USER©	DESIGNED ST	REVISED -	STATE OF ILLINOIS DEPARTMENT OF TRANSPORTATION	DISTRICT 4 STANDARDS US-24 OVER LAMARSH CREEK	F.A.P. RTE.	SECTION	COUNTY	TOTAL SHEETS	SHEET NO.
		DRAWN ST	REVISED -			317	45BR-2	PEORIA	122	89
	PLOT SCALE = ©SCALE©	CHECKED FML	REVISED -				280001	CONTRACT NO. 68719		
	PLOT DATE = ©DATE©	DATE 10-15-2010	REVISED -		SCALE: N.T.S. / SHEET NO. 2 OF 19 SHEETS / STA. / TO STA.	FED. ROAD DIST. NO.	ILLINOIS	FED. AID PROJECT		

PLAN — SURVEYED / PLOTTED / ALL OF BLY CHECKED / CADD FILE NAME / NOTE BOOK NO. / BY / DATE

PROFILE — SURVEYED / PLOTTED / GRADES CHECKED / ALL OF BLY STRUCTURE NOTATIONS CHKD / NOTE BOOK NO. / BY / DATE

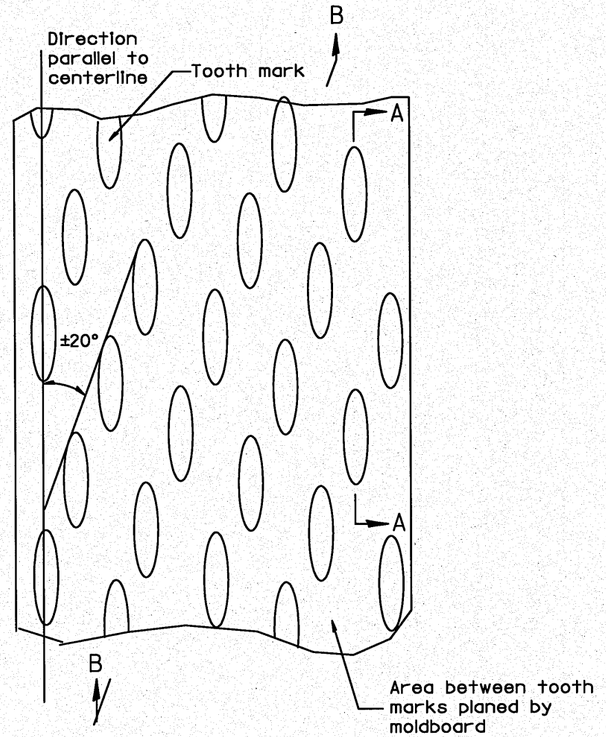

PLAN

General notes:

1. Coldmilling shall consist of two processes: Cutting with carbide teeth mounted on a rotating drum, and planing with a moldboard mounted immediately behind the cutting drum.
2. Other similar patterns will be acceptable if they consist of a smooth, flat, planed surface interspersed with a pattern of discontinuous longitudinal striations.

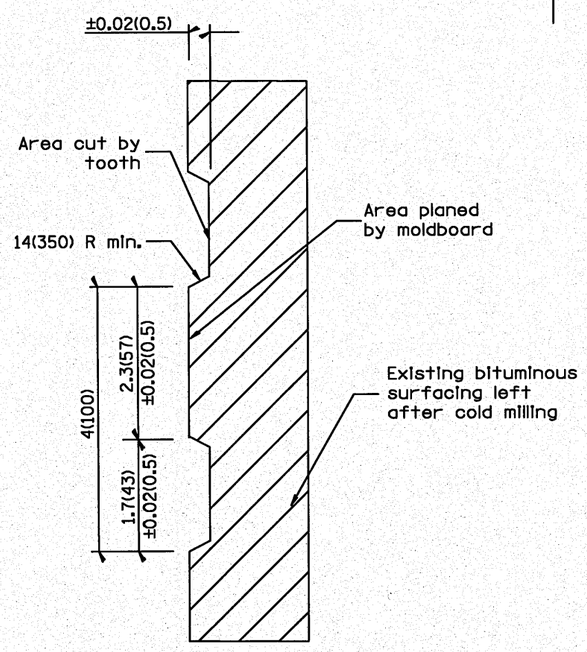

SECTION A-A

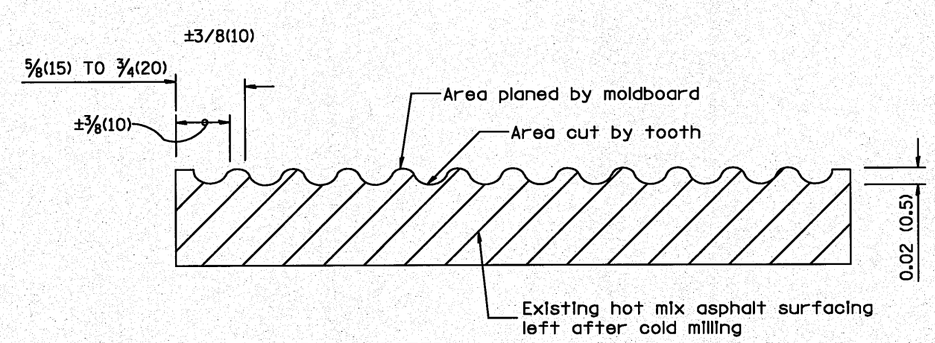

SECTION B-B PROJECTED PERPENDICULAR TO CENTERLINE

HOT MIX ASPHALT SURFACE REMOVAL (COLD MILLING)

All dimensions are in inches (millimeters) unless otherwise noted.

FILE NAME = ©FILEL©	USER NAME = ©USER©	DESIGNED ST	REVISED -
		DRAWN ST	REVISED -
	PLOT SCALE = ©SCALE©	CHECKED FML	REVISED -
	PLOT DATE = ©DATE©	DATE 10-15-2010	REVISED -

STATE OF ILLINOIS
DEPARTMENT OF TRANSPORTATION

DISTRICT 4 STANDARDS
US-24 OVER LAMARSH CREEK

SCALE: N.T.S. | SHEET NO. 3 OF 19 SHEETS | STA. | TO STA.

F.A.P. RTE.	SECTION	COUNTY	TOTAL SHEETS	SHEET NO.
317	45BR-2	PEORIA	122	90
	440001	CONTRACT NO. 68719		

FED. ROAD DIST. NO. | ILLINOIS | FED. AID PROJECT

PLAN
NOTE BOOK NO.
SURVEYED
PLOTTED
HORIZ. CHECKED
VERT. CHECKED
CADD FILE NAME
BY
DATE

PROFILE
NOTE BOOK NO.
SURVEYED
PLOTTED
GRADES CHECKED
B.M. NOTED
STRUCTURE NOTAYMS CHKD
BY
DATE

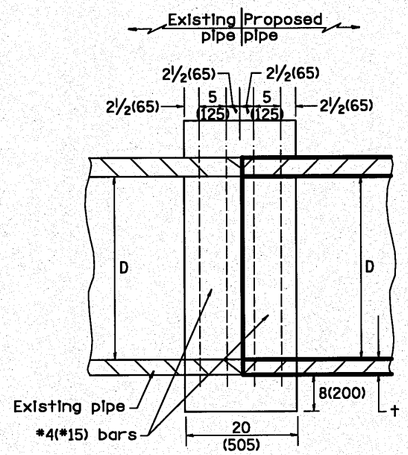

SECTION A - A

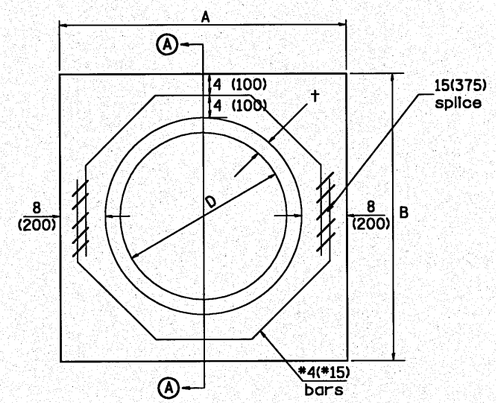

END VIEW

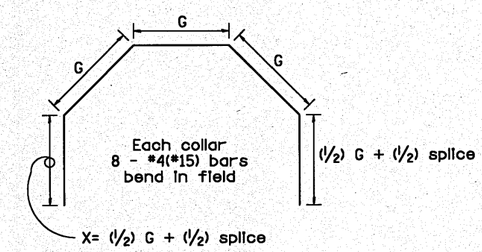

L= 3G + 2X

D in (mm)	t in (mm)	A ft (m)	B ft (m)	CL. SI CONC. cu. yd. (m^3)	Each Collar Reinforcement Bars G in (mm)	X in (mm)	L ft (m)	Weight lb (kg)
12 (300)	2.00 (51)	2.67 (0.814)	2.67 (0.814)	0.4 (0.270)	9 15/16 (253)	12 7/16 (317)	4.57 (1.393)	24 (11)
15 (375)	2.25 (57)	2.96 (0.902)	2.96 (0.902)	0.4 (0.315)	11 3/8 (290)	13 3/16 (335)	5.05 (1.541)	27 (12)
18 (450)	2.50 (64)	3.25 (0.991)	3.25 (0.991)	0.5 (0.362)	12 13/16 (327)	13 7/8 (354)	5.54 (1.689)	30 (14)
21 (525)	2.75 (70)	3.54 (1.079)	3.54 (1.079)	0.5 (0.411)	14 1/4 (364)	14 5/8 (372)	6.02 (1.836)	32 (15)
24 (600)	3.00 (76)	3.83 (1.167)	3.84 (1.167)	0.6 (0.460)	15 11/16 (401)	15 5/16 (391)	6.51 (1.984)	35 (16)
27 (675)	3.25 (83)	4.13 (1.259)	4.13 (1.259)	0.7 (0.516)	17 1/4 (438)	16 1/16 (409)	6.99 (2.131)	37 (17)
30 (750)	3.50 (89)	4.42 (1.347)	4.42 (1.347)	0.7 (0.570)	18 11/16 (475)	16 3/4 (428)	7.48 (2.279)	40 (18)
33 (825)	3.75 (95)	4.71 (1.436)	4.71 (1.436)	0.8 (0.624)	20 1/8 (512)	17 1/2 (446)	7.96 (2.426)	43 (19)
36 (900)	4.00 (102)	5.00 (1.524)	5.00 (1.524)	0.9 (0.682)	21 9/16 (549)	18 3/16 (465)	8.44 (2.574)	45 (20)
42 (1050)	4.50 (114)	5.58 (1.701)	5.58 (1.701)	1.0 (.800)	24 7/16 (622)	19 3/4 (501)	9.41 (2.869)	50 (23)
48 (1200)	5.00 (127)	6.17 (1.881)	6.17 (1.881)	1.2 (0.930)	27 5/16 (696)	21 3/16 (538)	10.38 (3.164)	55 (25)

GENERAL NOTES

1. THE COLLAR SHALL BE CONSTRUCTED ENTIRELY OF CLASS SI CONCRETE IN ACCORDANCE WITH THE APPLICABLE PORTIONS OF SECTION 503 OF THE STANDARD SPECIFICATIONS. REINFORCEMENT BARS SHALL CONFORM TO SECTION 508.

QUANTITIES

CALC. BY: R. J. D. 2-2-98 DATE:
CHECKED BY: R. D. H. 2-6-98 DATE:

QUANTITY CALCULATIONS ARE ON FILE AT THE DISTRICT 4 OFFICE; BUREAU OF PROJECT IMPLEMENTATION; DOCUMENTATION SECTION

PIPE CULVERT EXTENSION COLLAR (WITHOUT END SECTION)

All dimensions are in inches (millimeters) unless otherwise noted.

FILE NAME = ©FILE©	USER NAME = ©USER©	DESIGNED ST	REVISED -
		DRAWN ST	REVISED -
	PLOT SCALE = ©SCALE©	CHECKED FML	REVISED -
	PLOT DATE = ©DATE©	DATE 10-15-2010	REVISED -

STATE OF ILLINOIS
DEPARTMENT OF TRANSPORTATION

DISTRICT 4 STANDARDS
US-24 OVER LAMARSH CREEK

SCALE: N.T.S. | SHEET NO. 4 OF 19 SHEETS | STA. | TO STA.

F.A.P. RTE.	SECTION	COUNTY	TOTAL SHEETS	SHEET NO.
317	45BR-2	PEORIA	122	91
	542016	CONTRACT NO. 68719		
FED. ROAD DIST. NO.	ILLINOIS	FED. AID PROJECT		

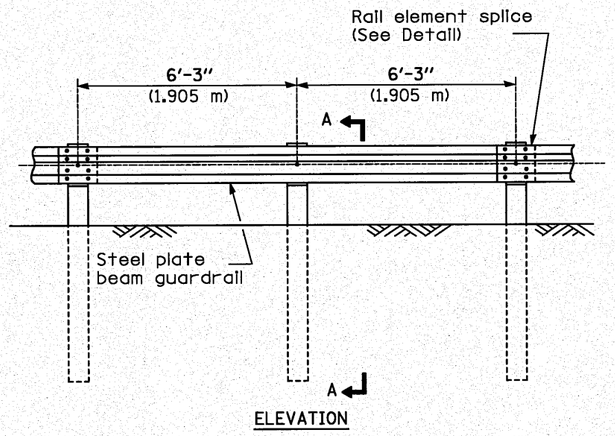

TYPE A

6'-3" (1.905 m) Typical post spacing

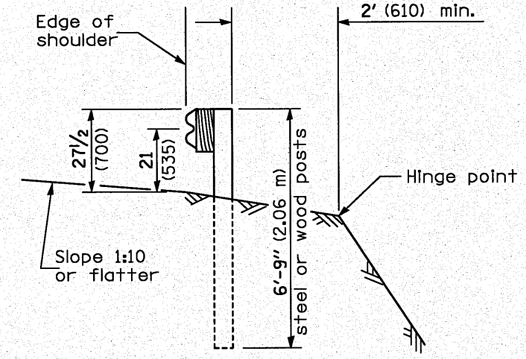

SECTION A-A

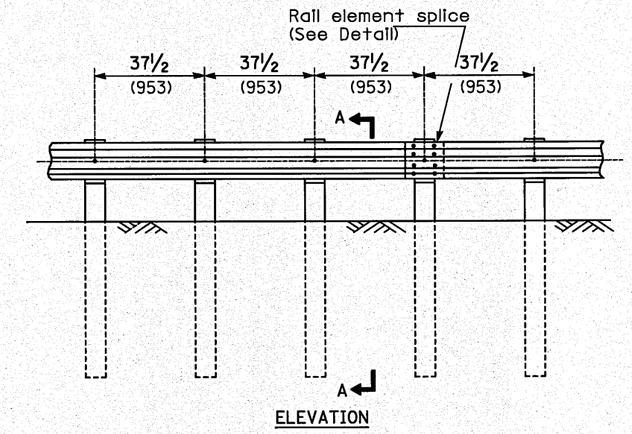

TYPE B

37½ (953) Closed post spacing

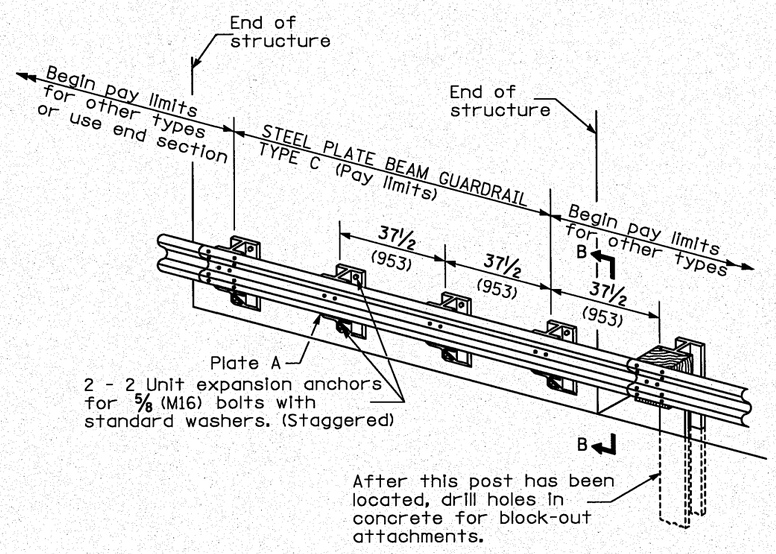

TYPE C

37½ (953) Block-out spacing

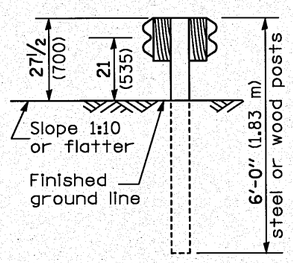

SECTION C-C

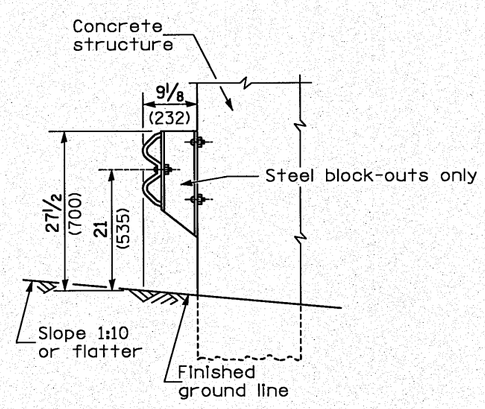

SECTION B-B

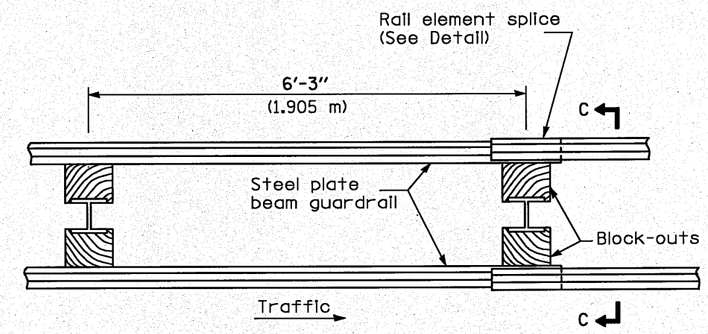

PLAN

TYPE D

Double steel plate beam guardrail
6'-3" (1.905 m) typical post spacing

GENERAL NOTES

All slope ratios are expressed as units of vertical displacement to units of horizontal displacement (V:H).

All dimensions are in millimeters (inches) unless otherwise shown.

The existing steel posts may be drilled to match the bolt pattern shown herein for the wood block-out, or a new steel post shall be provided.

This detail is applicable to the guardrail system used prior to January 1, 2007. For details on the Midwest Guardrail System, see Standard 630001.

REMOVE & REERECT STEEL PLATE BEAM GUARDRAIL

All dimensions are in inches (millimeters) unless otherwise noted.

FILE NAME = ©FILEL©	USER NAME = ©USER©	DESIGNED ST	REVISED -
		DRAWN ST	REVISED -
	PLOT SCALE = ©SCALE©	CHECKED FML	REVISED -
	PLOT DATE = ©DATE©	DATE 10-15-2010	REVISED -

STATE OF ILLINOIS
DEPARTMENT OF TRANSPORTATION

DISTRICT 4 STANDARDS
US-24 OVER LAMARSH CREEK

SCALE: N.T.S. | SHEET NO. 5 OF 19 SHEETS | STA. | TO STA.

F.A.P. RTE.	SECTION	COUNTY	TOTAL SHEETS	SHEET NO.
317	45BR-2	PEORIA	122	92
	630011 PAGE 1 OF 4	CONTRACT NO. 68719		
FED. ROAD DIST. NO.	ILLINOIS	FED. AID PROJECT		

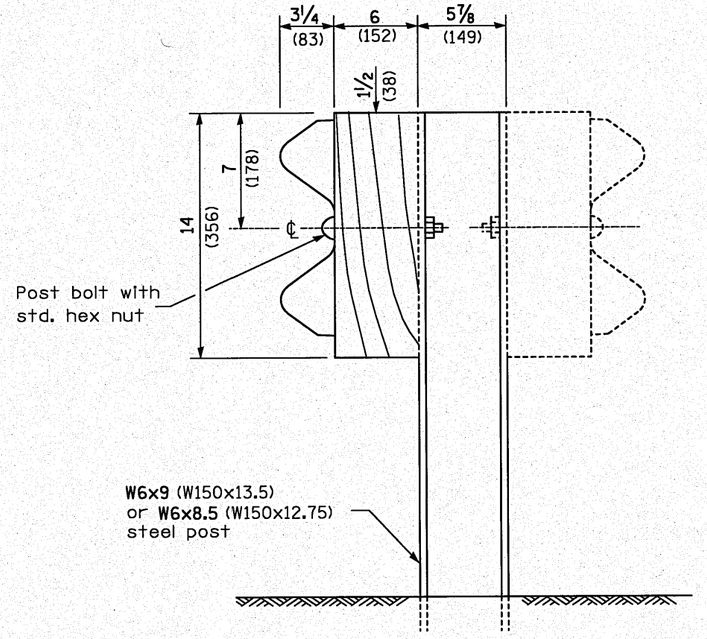

STEEL POST CONSTRUCTION

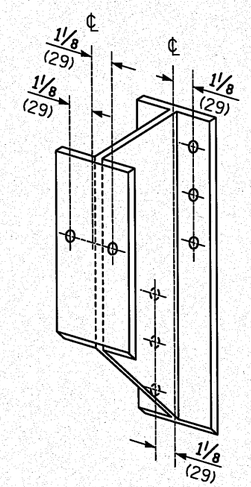

STEEL BLOCK-OUT DETAIL

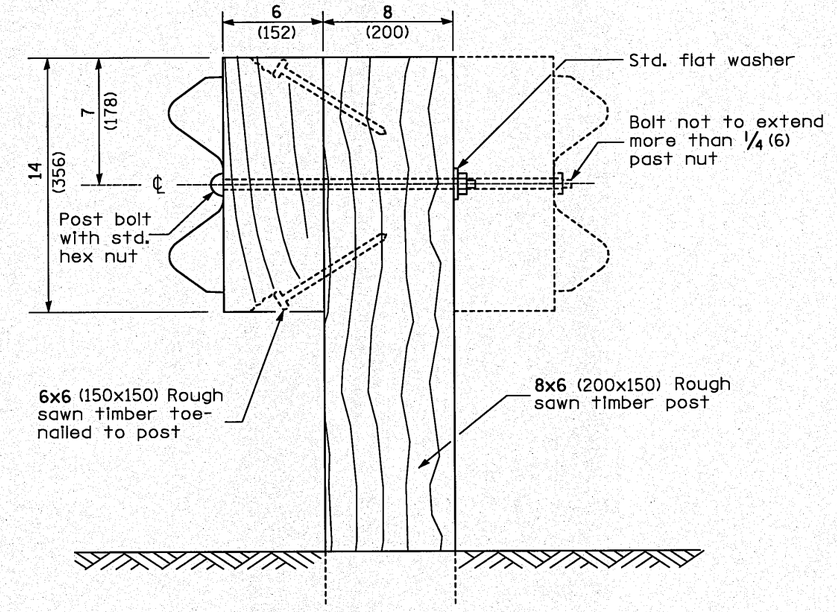

WOOD POST CONSTRUCTION

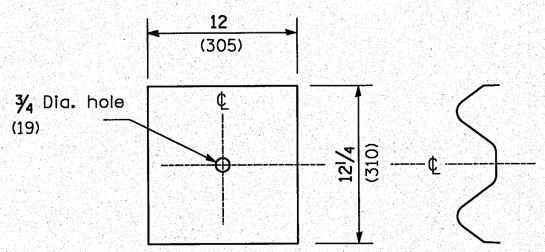

NOTE

Plate A shall be placed between rail element and block-out at non-splice mounting points only when steel block-outs are used.

PLATE A

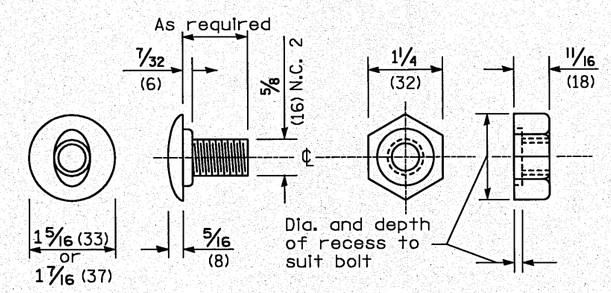

POST OR SPLICE BOLT & NUT

All dimensions are in inches (millimeters) unless otherwise noted.

FILE NAME = ©FILEL©	USER NAME = ©USER©	DESIGNED ST	REVISED -	STATE OF ILLINOIS DEPARTMENT OF TRANSPORTATION	DISTRICT 4 STANDARDS US-24 OVER LAMARSH CREEK			F.A.P. RTE.	SECTION	COUNTY	TOTAL SHEETS	SHEET NO.
		DRAWN ST	REVISED -					317	45BR-2	PEORIA	122	93
	PLOT SCALE = ©SCALE©	CHECKED FML	REVISED -						630011 PAGE 2 OF 4	CONTRACT NO. 68719		
	PLOT DATE = ©DATE©	DATE 10-15-2010	REVISED -		SCALE: N.T.S.	SHEET NO. 6 OF 19 SHEETS	STA. TO STA.	FED. ROAD DIST. NO.	ILLINOIS	FED. AID PROJECT		

PLAN — SURVEYED / PLOTTED / ALIGNMENT CHECKED / GRADES CHECKED / ALIGNMENT CHECKED / CADD FILE NAME — NOTE BOOK NO. — BY — DATE

PROFILE — SURVEYED / PLOTTED / GRADES CHECKED / STRUCTURE NO(s)/STA(s) CH'KD — NOTE BOOK NO. — BY — DATE

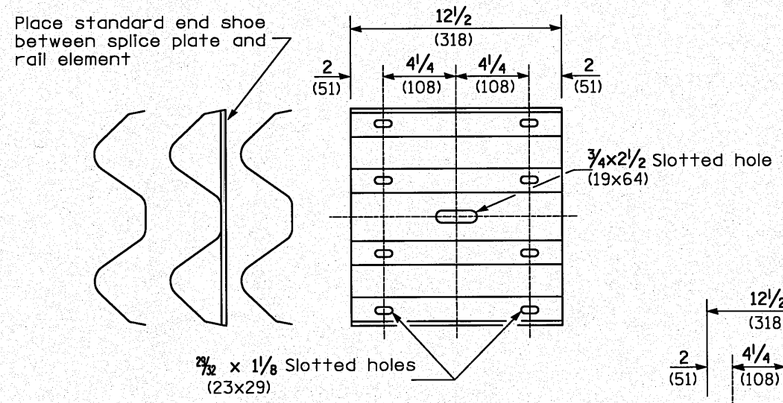

SPLICE PLATE

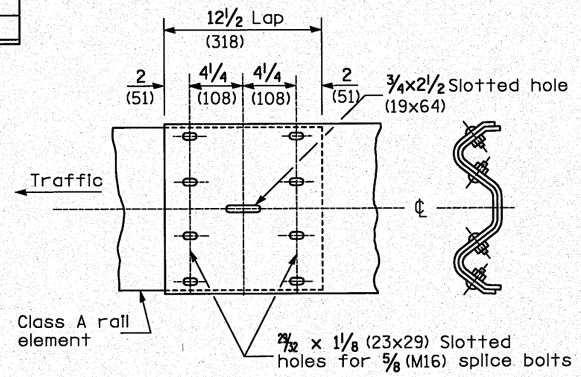

RAIL ELEMENT SPLICE

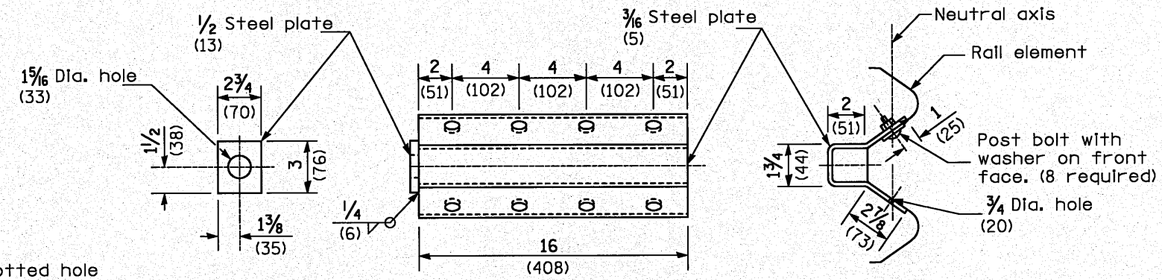

NOTE

Anchor plate T shall be used to attach cable assembly to guardrail when required on traffic barrier terminals.

ANCHOR PLATE T DETAILS

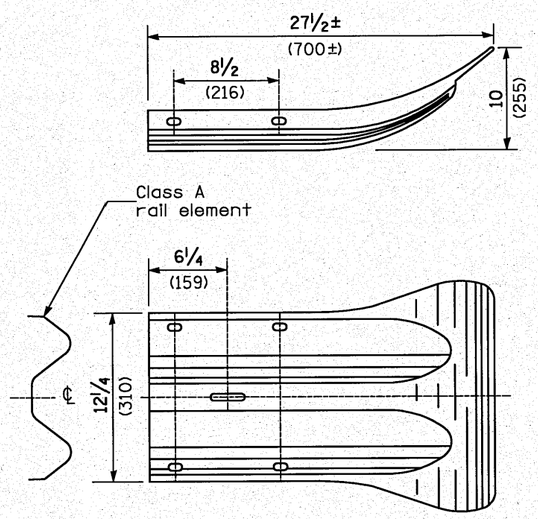

END SECTION

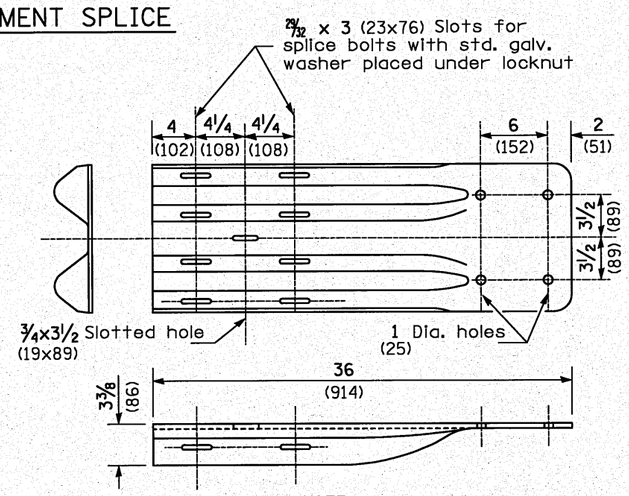

NOTE

When end shoe is attached to a bridge parapet which has an expansion joint, the bolts shall be provided with a locknut or double nut and shall be tightened only to a point that will allow guardrail movement.

The standard end shoe shall be attached to the concrete with pre-drilled or self-drilling anchor bolts. The anchor cone shall be set flush with the surface of the concrete.

Externally threaded studs protruding from the surface of the concrete will not be permitted.

END SHOE

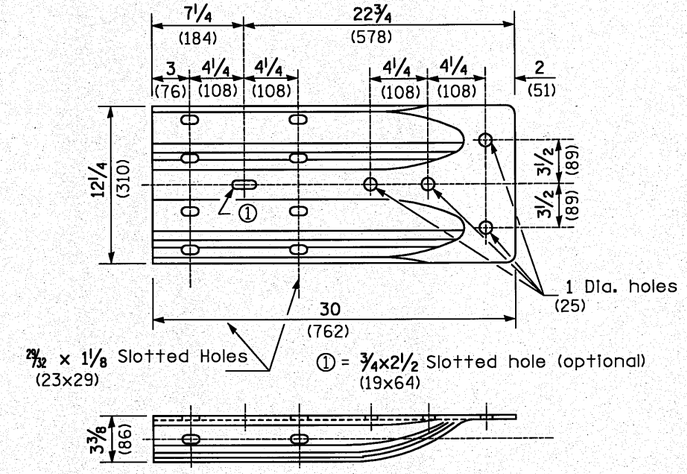

ALTERNATE END SHOE

All dimensions are in inches (millimeters) unless otherwise noted.

FILE NAME = ©FILEL©	USER NAME = ©USER©	DESIGNED ST	REVISED -	STATE OF ILLINOIS DEPARTMENT OF TRANSPORTATION	DISTRICT 4 STANDARDS US-24 OVER LAMARSH CREEK	F.A.P. RTE.	SECTION	COUNTY	TOTAL SHEETS / SHEET NO.
		DRAWN ST	REVISED -			317	45BR-2	PEORIA	122 / 94
	PLOT SCALE = ©SCALE©	CHECKED FML	REVISED -				630011 PAGE 3 OF 4	CONTRACT NO. 68719	
	PLOT DATE = ©DATE©	DATE 10-15-2010	REVISED -		SCALE: N.T.S. / SHEET NO. 7 OF 19 SHEETS / STA. / TO STA.	FED. ROAD DIST. NO.	ILLINOIS	FED. AID PROJECT	

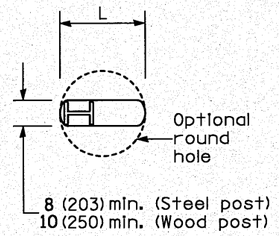

PLAN

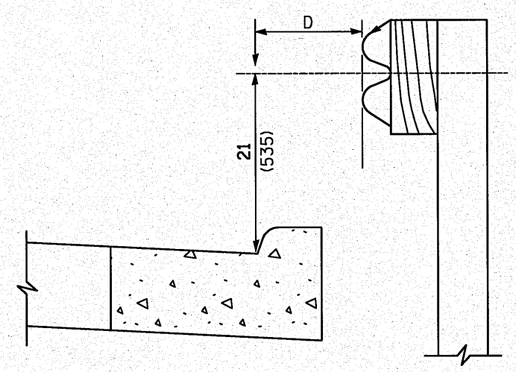

Note:
If it is necessary for D to be more than 12 (300) and less than 10'-0" (3.0 m) type M-2 (M-5) curb and gutter (Std. 606001) shall be used in front of and in advance of the guardrail.

GUARDRAIL PLACED BEHIND CURB

(D = 0 desirable to 12 (300) maximum)

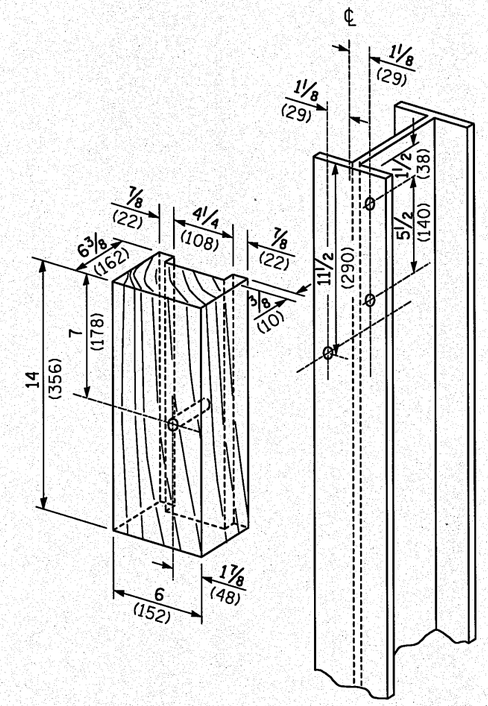

WOOD BLOCK-OUT AND STEEL POST DETAILS

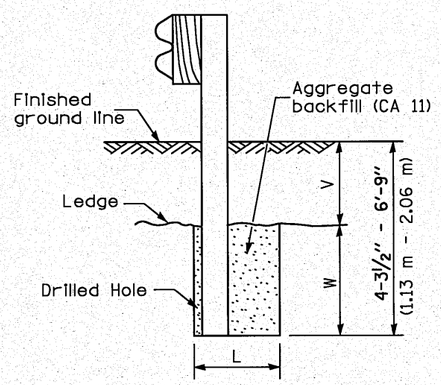

Note:
Ledge line is top of rock ledge or hard slag fill.

ELEVATION

FOOTING FOR POST WHEN IMPERVIOUS MATERIAL IS ENCOUNTERED

V	W	L	
		Steel Post	Wood Post
0 - 18 (0 - 460)	24 (610)	21 (530)	23 (580)
>18 - 41.5 (>460 - 825)	12 (305)	8 (203)	10 (250)
>41.5 - 53.5 (>825 - 1.13 m)	12 - 0 (305 - 0)	8 (203)	10 (250)

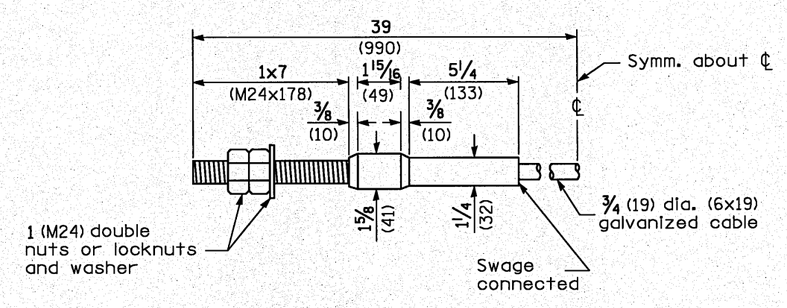

CABLE ASSEMBLY

(18,100 kg (40,000 lbs.) min. breaking strength)
Tighten to taut tension.

All dimensions are in inches (millimeters) unless otherwise noted.

FILE NAME = ©FILE©	USER NAME = ©USER©	DESIGNED ST	REVISED -
		DRAWN ST	REVISED -
	PLOT SCALE = ©SCALE©	CHECKED FML	REVISED -
	PLOT DATE = ©DATE©	DATE 10-15-2010	REVISED -

STATE OF ILLINOIS
DEPARTMENT OF TRANSPORTATION

DISTRICT 4 STANDARDS
US-24 OVER LAMARSH CREEK

SCALE: N.T.S. | SHEET NO. 8 OF 19 SHEETS | STA. | TO STA.

F.A.P. RTE.	SECTION	COUNTY	TOTAL SHEETS	SHEET NO.
317	45BR-2	PEORIA	122	95
	630011 PAGE 4 OF 4	CONTRACT NO. 68719		
FED. ROAD DIST. NO.	ILLINOIS	FED. AID PROJECT		

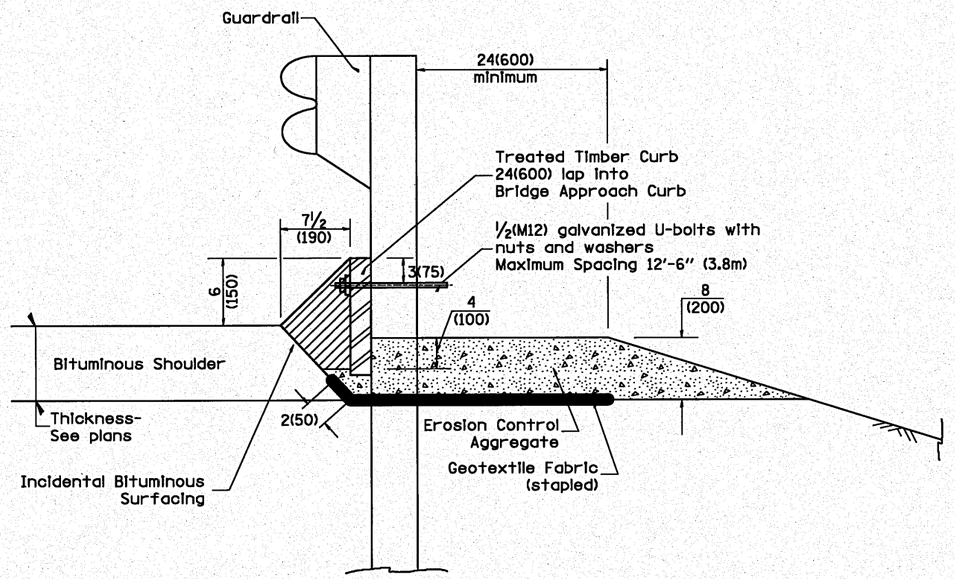

TYPICAL SECTION WITH EROSION CONTROL CURB

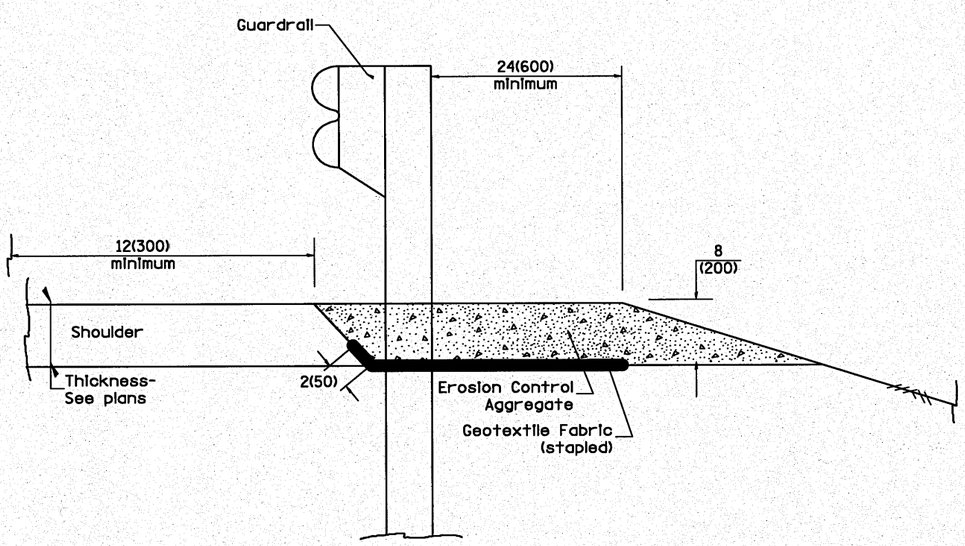

TYPICAL SECTION WITHOUT EROSION CONTROL CURB

GENERAL NOTES: EROSION CONTROL CURB

1. This work shall consist of grading as needed, installing hardware and treated timber boards, furnishing and placing mastic material and incidental bituminous surfacing in front of Steel Plate Beam Guardrail in accordance with Plan Details.

2. Timber shall be treated in accordance with Article 1007.12. All preservatives specified in the article will be allowed. Waterborne preservatives "asa" and "cca" shall have a minimum retention of 0.40 lbs./cu. ft. (6.4 kg/m³)

GENERAL NOTES: GUARDRAIL AGGREGATE EROSION CONTROL

1. This work shall consist of grading as needed, furnishing and installing geotextile fabric and staples, and furnishing, placing and shaping crushed aggregate around and behind Steel Plate Beam Guardrail posts in accordance with Plan Details.

2. Before placing the aggregate and the Geotextile Fabric, weeds and grass shall be removed from the area to be covered.

3. After the area has been prepared, and in a dry condition, the Geotextile fabric shall be placed with a 12(300) minimum overlap. A knife cut for guardrail post installation is necessary.

4. The aggregate shall be deposited, compacted and shaped by either mechanical or hand methods, in a manner reasonably true to line and grade.

5. The Contractor shall have the option of placing the guardrail before or after the Geotextile Fabric and Aggregate are in place. If the guardrail is placed after the Geotextile Fabric and Aggregate, then any voids must be filled and the aggregate returned to line and grade.

6. Materials shall meet the following requirements:

   A. The crushed aggregate shall be CA1 gradation in accordance with Article 1004.01(c) of the Standard Specifications.

   B. The Geotextile Fabric shall be nonwoven fabric in accordance with Article 1080.02 of the Standard Specifications.

GUARDRAIL EROSION CONTROL TREATMENT

All dimensions are in inches (millimeters) unless otherwise noted.

FILE NAME = ©FILEL©	USER NAME = ©USER©	DESIGNED ST	REVISED -
		DRAWN ST	REVISED -
	PLOT SCALE = ©SCALE©	CHECKED FML	REVISED -
	PLOT DATE = ©DATE©	DATE 10-15-2010	REVISED -

STATE OF ILLINOIS
DEPARTMENT OF TRANSPORTATION

DISTRICT 4 STANDARDS
US-24 OVER LAMARSH CREEK

SCALE: N.T.S. | SHEET NO. 9 OF 19 SHEETS | STA. | TO STA.

F.A.P. RTE.	SECTION	COUNTY	TOTAL SHEETS	SHEET NO.
317	45BR-2	PEORIA	122	96
	630101 PAGE 1 OF 2	CONTRACT NO. 68719		
FED. ROAD DIST. NO.	ILLINOIS	FED. AID PROJECT		

PLAN: SURVEYED / PLOTTED / ALIGNMENT CHECKED / ALL OF BKY CHECKED / CADD FILE NAME / NOTE BOOK NO. / BY / DATE

PROFILE: SURVEYED / PLOTTED / GRADES CHECKED / BLUE TOP CHECKED / STRUCTURE NOTAYRS CHKD / NOTE BOOK NO. / BY / DATE

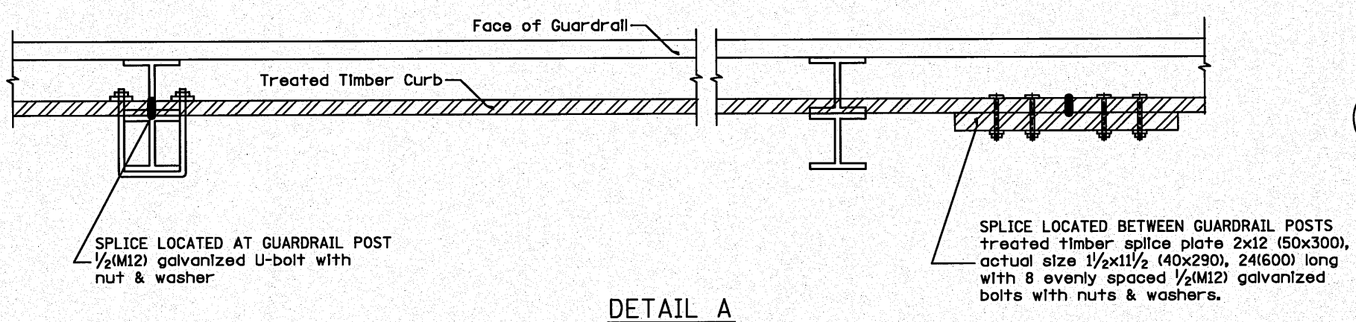

DETAIL A

(Typical Treated Timber Splices)

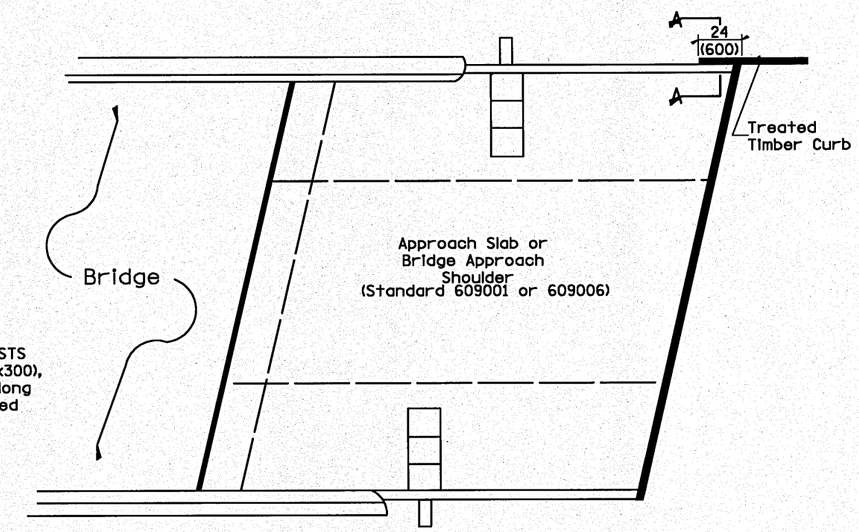

PLAN VIEW

APPROACH SLAB OR BRIDGE APPROACH SHOULDER
(STANDARD 609001 or 609006)

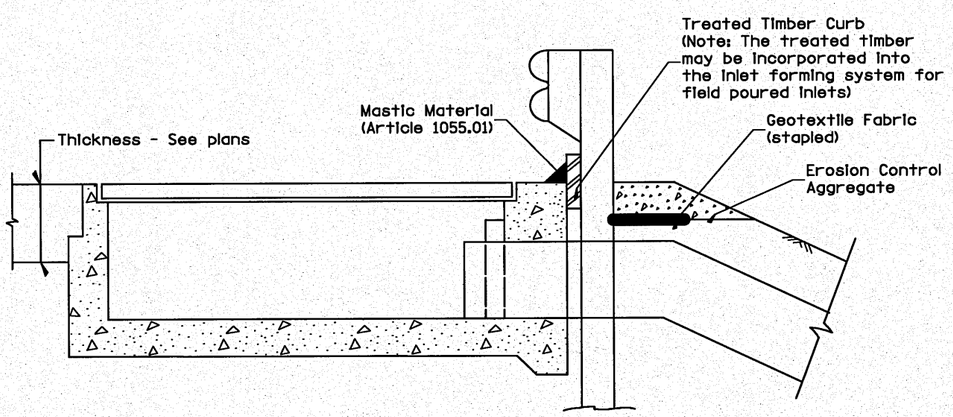

TYPICAL SECTION WITH EROSION CONTROL CURB
AT INLETS TYPE E & F (STANDARD 610001)

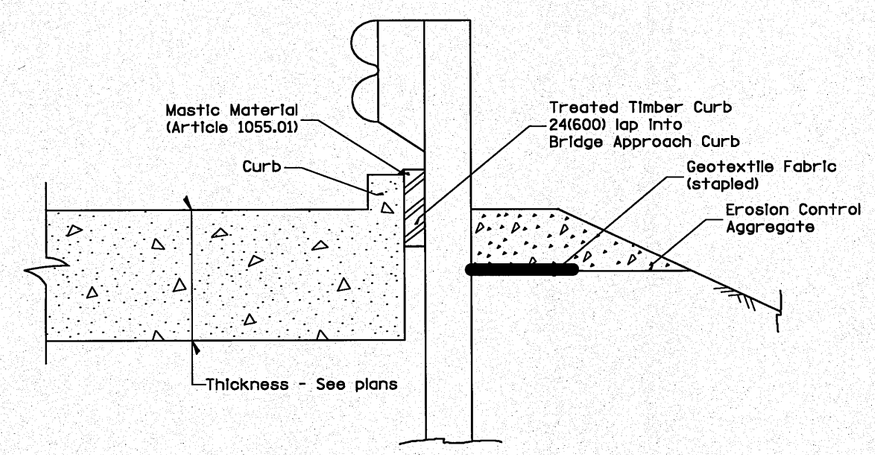

SECTION A-A

TYPICAL SECTION WITH EROSION CONTROL CURB
AT BRIDGE APPROACH CURB
(STANDARD 609001 OR 609006)

All dimensions are in inches (millimeters) unless otherwise noted.

FILE NAME = ©FILEL©	USER NAME = ©USER©	DESIGNED ST	REVISED -	STATE OF ILLINOIS DEPARTMENT OF TRANSPORTATION	DISTRICT 4 STANDARDS US-24 OVER LAMARSH CREEK	F.A.P. RTE.	SECTION	COUNTY	TOTAL SHEETS	SHEET NO.
		DRAWN ST	REVISED -			317	45BR-2	PEORIA	122	97
	PLOT SCALE = ©SCALE©	CHECKED FML	REVISED -				630101 PAGE 2 OF 2	CONTRACT NO. 68719		
	PLOT DATE = ©DATE©	DATE 10-15-2010	REVISED -		SCALE: N.T.S. / SHEET NO. 10 OF 19 SHEETS / STA. / TO STA.	FED. ROAD DIST. NO.	ILLINOIS	FED. AID PROJECT		

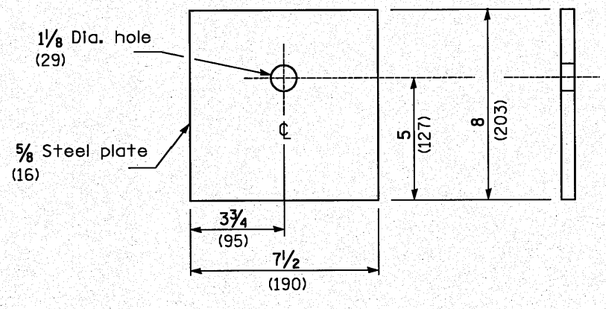

BEARING PLATE K

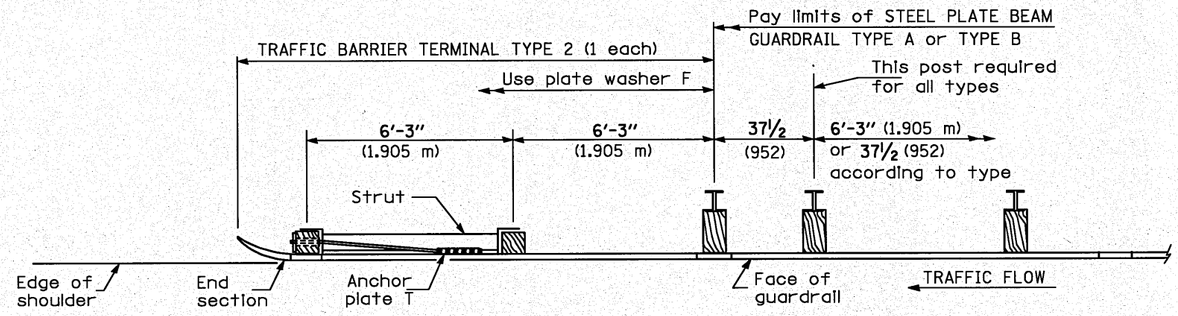

PLAN

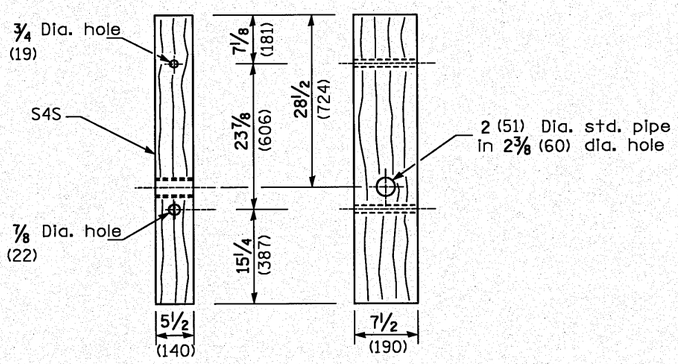

WOOD POST

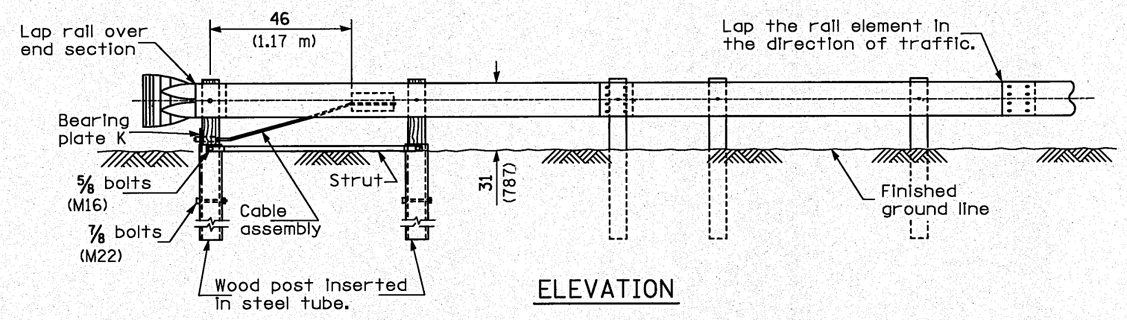

ELEVATION

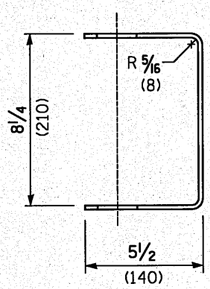

YOKE

3/16 (5) thick steel

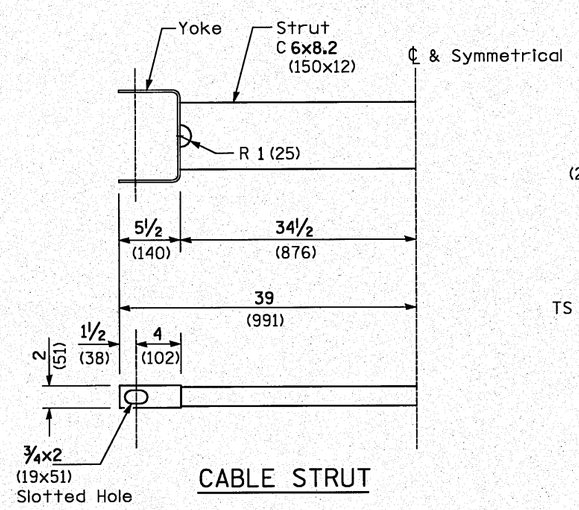

CABLE STRUT

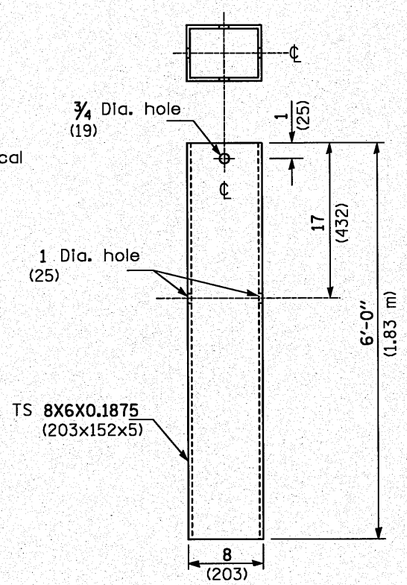

STEEL TUBE

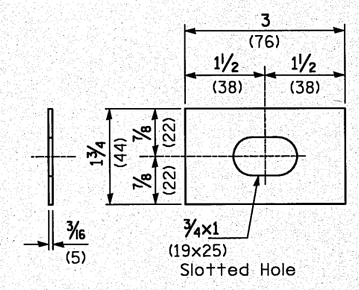

PLATE WASHER F

GENERAL NOTES

See Standard 630001 for details of guardrail not shown.

The bearing plate K shall be held in position by (2) two eight penny nails driven into the post and bent over the top of the plate.

TRAFFIC BARRIER TERMINAL, TYPE 2

All dimensions are in inches (millimeters) unless otherwise noted.

FILE NAME = ©FILEL©	USER NAME = ©USER©	DESIGNED ST	REVISED -	STATE OF ILLINOIS DEPARTMENT OF TRANSPORTATION	DISTRICT 4 STANDARDS US-24 OVER LAMARSH CREEK	F.A.P. RTE.	SECTION	COUNTY	TOTAL SHEETS	SHEET NO.
		DRAWN ST	REVISED -			317	458R-2	PEORIA	122	98
	PLOT SCALE = ©SCALE©	CHECKED FML	REVISED -				631011	CONTRACT NO. 68719		
	PLOT DATE = ©DATE©	DATE 10-15-2010	REVISED -		SCALE: N.T.S. / SHEET NO. 11 OF 19 SHEETS / STA. / TO STA.	FED. ROAD DIST. NO.	ILLINOIS	FED. AID PROJECT		

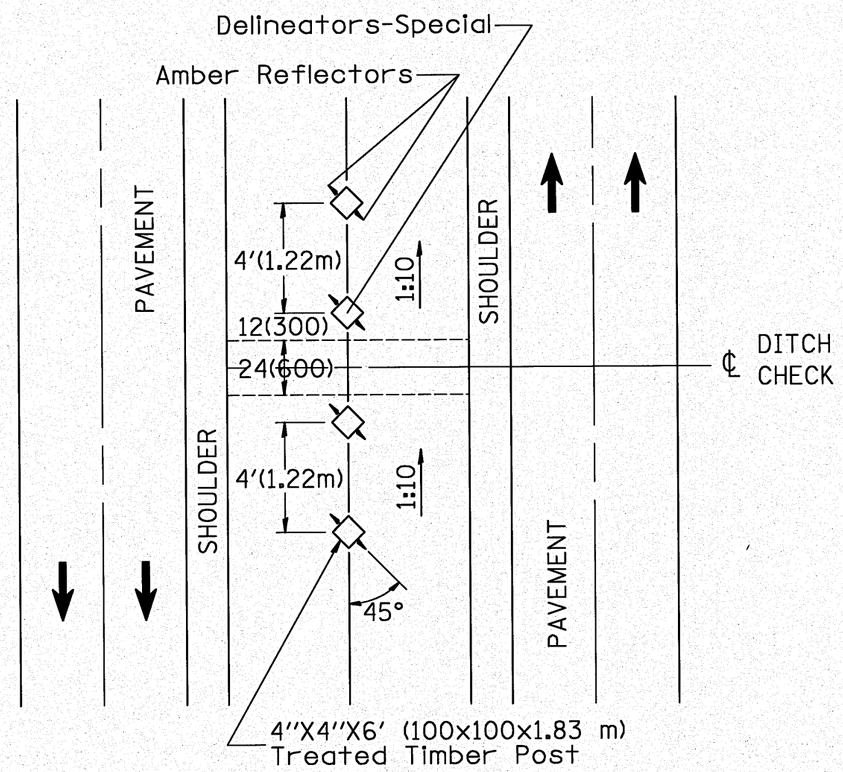

NOTES:

1. DELINEATORS, SPECIAL shall be constructed of 4" x 4" x 6' (100 x 100 x 1.83 m) treated timber.
2. Each post shall be buried a minimum of 36(900) deep.
3. Timber shall be treated in accordance with Article 1007.12 of the Standard Specifications. Waterborne Preservatives, ASA and CCA, shall have A 0.40 lbs/ft^3(6.4 kg/m^3) minimum retention.
4. Amber Reflectors shall meet the requirements of Article 1097.03 of the Standard Specifications.

All slope ratios are expressed as units of vertical displacement to units of horizonal displacement (V:H).

All dimensions are in inches (millimeters) unless otherwise noted.

DELINEATORS – SPECIAL

FILE NAME = @FILEL@	USER NAME = @USER@	DESIGNED ST	REVISED -
		DRAWN ST	REVISED -
	PLOT SCALE = @SCALE@	CHECKED FML	REVISED -
	PLOT DATE = @DATE@	DATE 10-15-2010	REVISED -

STATE OF ILLINOIS
DEPARTMENT OF TRANSPORTATION

DISTRICT 4 STANDARDS
US-24 OVER LAMARSH CREEK

SCALE: N.T.S. | SHEET NO. 12 OF 19 SHEETS | STA. | TO STA.

F.A.P. RTE.	SECTION	COUNTY	TOTAL SHEETS	SHEET NO.
317	45BR-2	PEORIA	122	99
	635001	CONTRACT NO. 68719		
FED. ROAD DIST. NO.	ILLINOIS	FED. AID PROJECT		

PLAN
SURVEYED
PLOTTED
ALIGNMENT CHECKED
GRADES CHECKED
NOTE BOOK
NO.
BY
DATE

PROFILE
SURVEYED
PLOTTED
GRADES CHECKED
ALIGNMENT CHECKED
NOTE BOOK
NO.
STRUCTURE @STATYRS CHKD
BY
DATE

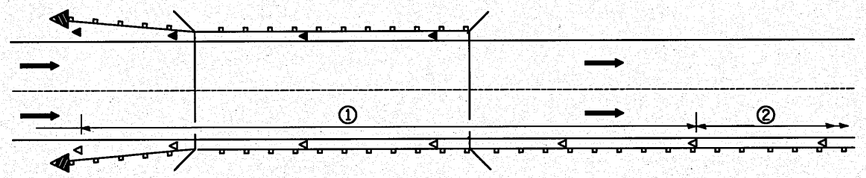

① Spacing 80 ft. (24 m) max. for first 400 ft. (122 m) or curve spacing shown in Standard 635001, whichever is less (min. 4 reflectors regardless of length).

② After 400 ft. (122 m), transition to normal delineator spacing shown in Standard 635001, and continue as required.

ONE-WAY TRAFFIC

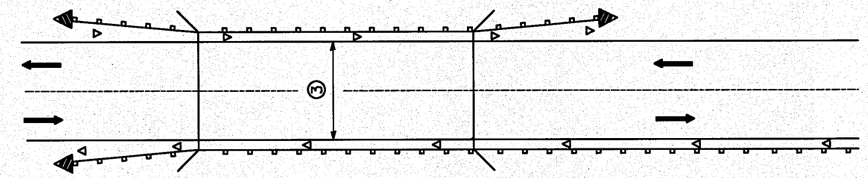

③ Bidirectional silver/silver should be used in lieu of monodirectional silver on both sides of two-lane bridges where the bridge pavement is less than 24 (610) wider than the pavement approaching the bridge.

TWO-WAY TRAFFIC

GUARDRAIL / BARRIER WALL / BRIDGE RAIL REFLECTORS

LEGEND

- ◁ Monodirectional silver
- ◀ Monodirectional amber
- Terminal Marker - Black/Yellow Left or Right as appropriate

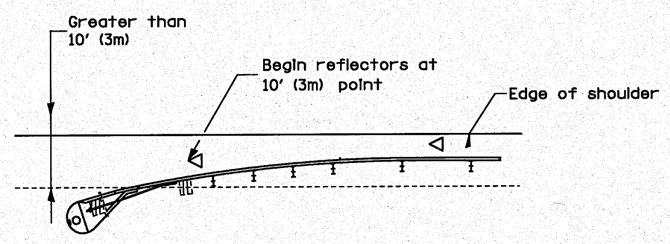

NOTE: Omit terminal marker when terminal over 10' (3m) from edge of paved shoulder or break point of unpaved shoulder, or when terminal buried in backslope.

Traffic Barrier Terminal Type(*) and/or Turned-Down Terminal

[Terminal over 10' (3m) from edge of shoulder]
*See Plans for Type

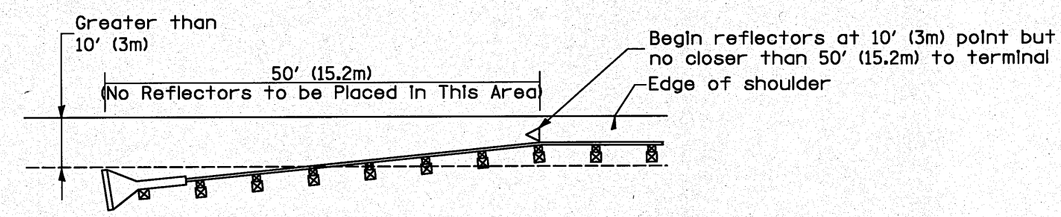

NOTE: Omit terminal marker when terminal over (10') from edge of paved shoulder or break point of unpaved shoulder.

Traffic Barrier Terminal Type 1 (Special)
[Terminal over 10' (3m) from edge of shoulder]

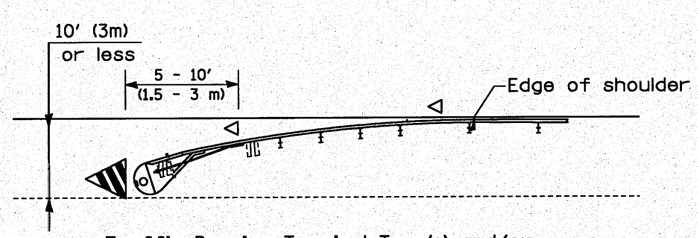

Traffic Barrier Terminal Type(*) and/or Turned-Down Terminal

[Terminal over 10' (3m) or less from edge of shoulder]
*See Plans for Type

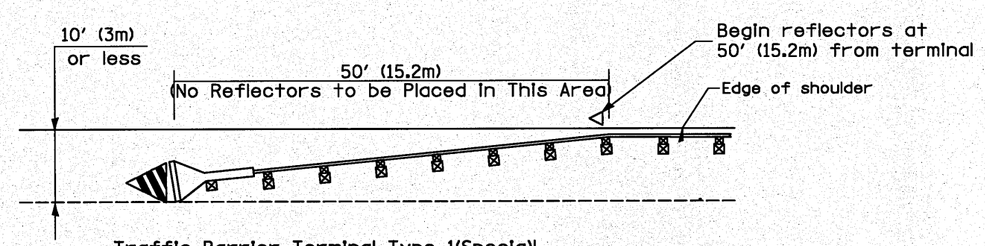

Traffic Barrier Terminal Type 1(Special)
[Terminal 10' (3m) or less from edge of shoulder]

TERMINAL MARKER PLACEMENT

GUARDRAIL AND BARRIER WALL DELINEATION

All dimensions are in inches (millimeters) unless otherwise noted.

FILE NAME = ©FILEL©	USER NAME = ©USER©	DESIGNED ST	REVISED -
		DRAWN ST	REVISED -
	PLOT SCALE = ©SCALE©	CHECKED FML	REVISED -
	PLOT DATE = ©DATE©	DATE 10-15-2010	REVISED -

STATE OF ILLINOIS
DEPARTMENT OF TRANSPORTATION

DISTRICT 4 STANDARDS
US-24 OVER LAMARSH CREEK

SCALE: N.T.S. | SHEET NO. 13 OF 19 SHEETS | STA. | TO STA.

F.A.P. RTE.	SECTION	COUNTY	TOTAL SHEETS	SHEET NO.
317	45BR-2	PEORIA	122	100
	635101 PAGE 1 OF 3	CONTRACT NO. 68719		
FED. ROAD DIST. NO.	ILLINOIS	FED. AID PROJECT		

PLAN: SURVEYED / PLOTTED / ALIGNMENT CHECKED / BY OF WAY CHECKED / CAD FILE NAME / NOTE BOOK NO. / BY / DATE

PROFILE: SURVEYED / PLOTTED / GRADES CHECKED / BRIDGE / STRUCTURE NO(s)/PIPS CHKD / NOTE BOOK NO. / BY / DATE

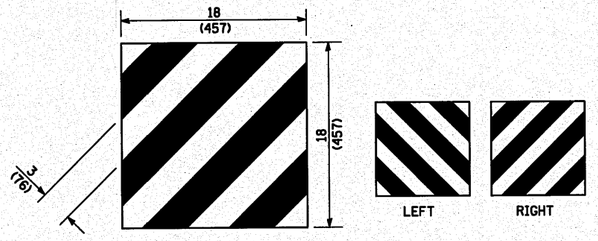

For Traffic Barrier Terminal Type 1 (Special)

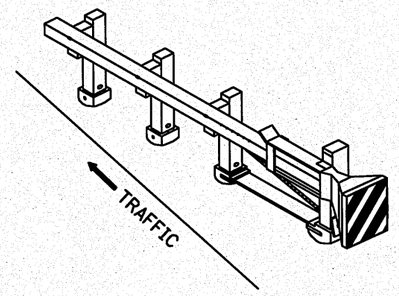

Standard Treatment - Direct Applied Sheeting
Traffic Barrier Terminal Type 1 (Special)

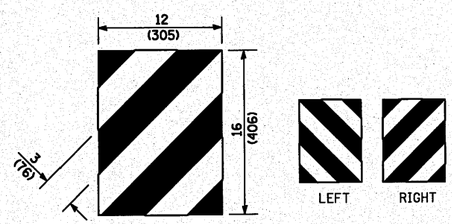

For Traffic Barrier Terminal Type (*)
and Post Mount
* See Plans for Type

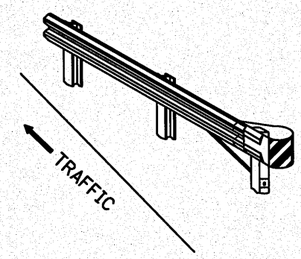

Standard Treatment - Direct Applied Sheeting
Traffic Barrier Terminal Type (*)
* See Plans for Type

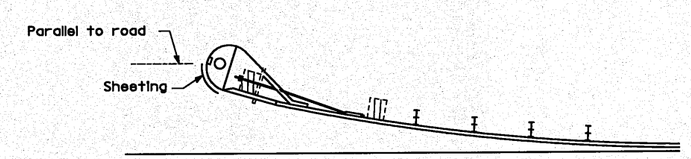

Sheeting Position for
Traffic Barrier Terminal Type (*)
* See Plans for Type

TERMINAL MARKER DETAILS

Color: Black / Yellow reflectorized

OM - I100 (L or R) Direct applied reflective sheeting

OM - I200 (L or R) Post mounted

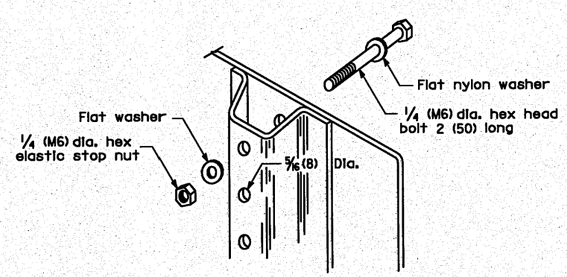

DETAIL OF MOUNTING TERMINAL MARKER TO POST

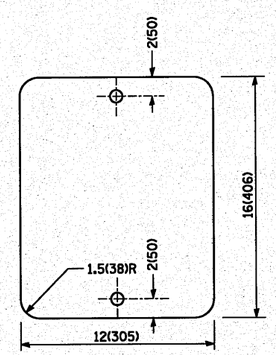

STANDARD TERMINAL MARKER

POST MOUNTED TERMINAL MARKER ASSEMBLY

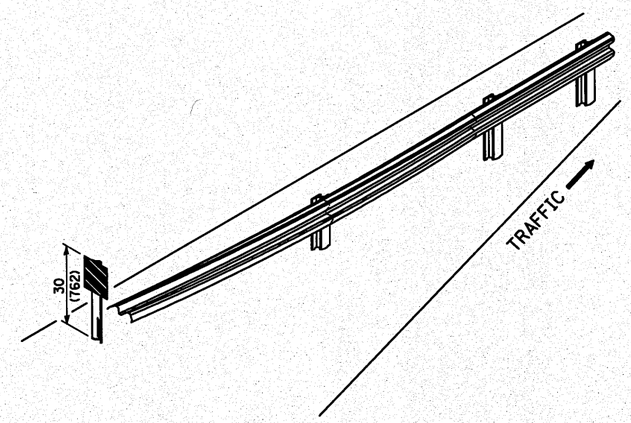

ALTERNATE TREATMENT - POST MOUNTED
(For turned-down terminal where sheeting cannot be direct applied)

TERMINAL MARKER TREATMENTS

GENERAL NOTES

All dimensions are in inches (millimeters) unless otherwise noted.

FILE NAME = $FILEL$	USER NAME = $USER$	DESIGNED ST	REVISED -
		DRAWN ST	REVISED -
	PLOT SCALE = $SCALE$	CHECKED FML	REVISED -
	PLOT DATE = $DATE$	DATE 10-15-2010	REVISED -

STATE OF ILLINOIS
DEPARTMENT OF TRANSPORTATION

DISTRICT 4 STANDARDS
US-24 OVER LAMARSH CREEK

SCALE: N.T.S. | SHEET NO. 14 OF 19 SHEETS | STA. | TO STA.

F.A.P. RTE.	SECTION	COUNTY	TOTAL SHEETS	SHEET NO.
317	45BR-2	PEORIA	122	101
	635101 PAGE 2 OF 3	CONTRACT NO. 68719		
FED. ROAD DIST. NO.	ILLINOIS	FED. AID PROJECT		

PLAN
SURVEYED
PLOTTED
ALIGNMENT CHECKED
NOTE BOOK
NO. ___
VIL. OF INV. CHECKED
CADD FILE NAME
BY
DATE

PROFILE
SURVEYED
PLOTTED
GRADES CHECKED
NOTE BOOK
NO. ___
STRUCTURE NOTATIONS CHKD
BY
DATE

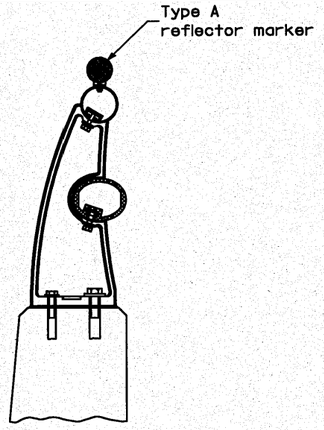

TYPICAL MOUNTING DETAIL
FOR BRIDGE RAIL REFLECTOR

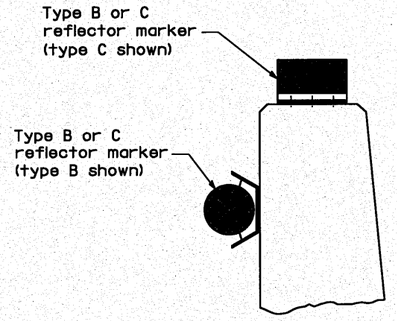

TYPICAL MOUNTING DETAIL
FOR BARRIER WALL REFLECTOR

REFLECTOR MOUNTING

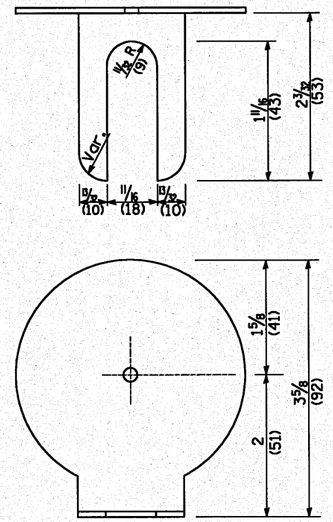

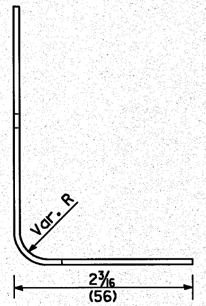

REFLECTOR MARKER TYPE A

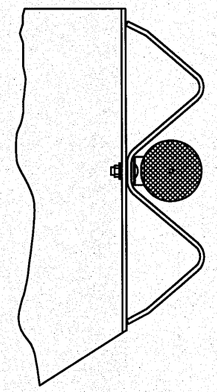

TYPICAL GUARDRAIL MOUNTING WITH
REFLECTOR MARKER TYPE A

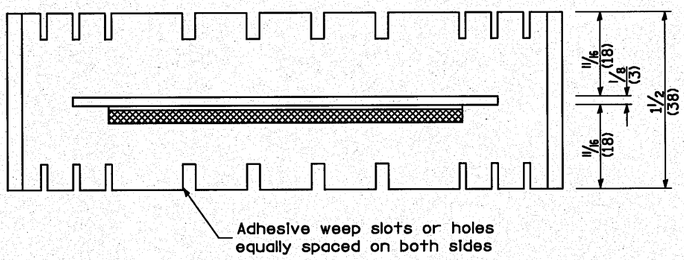

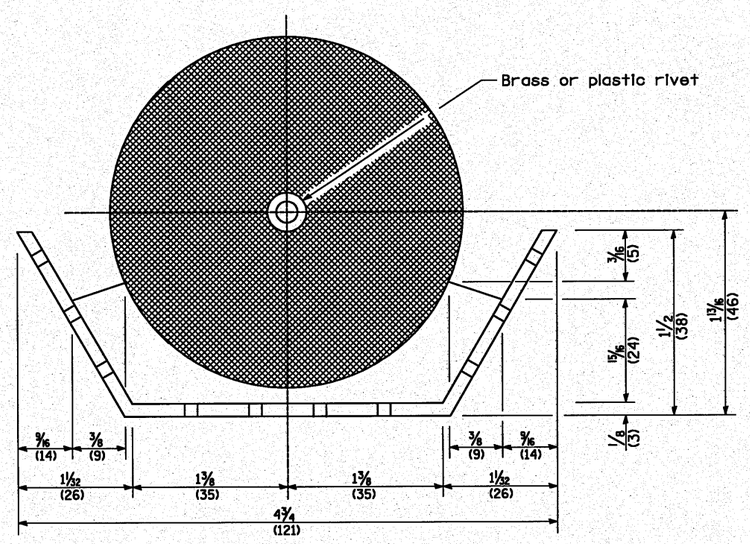

REFLECTOR MARKER TYPE B

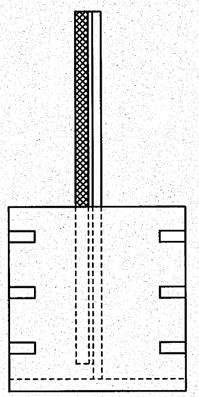

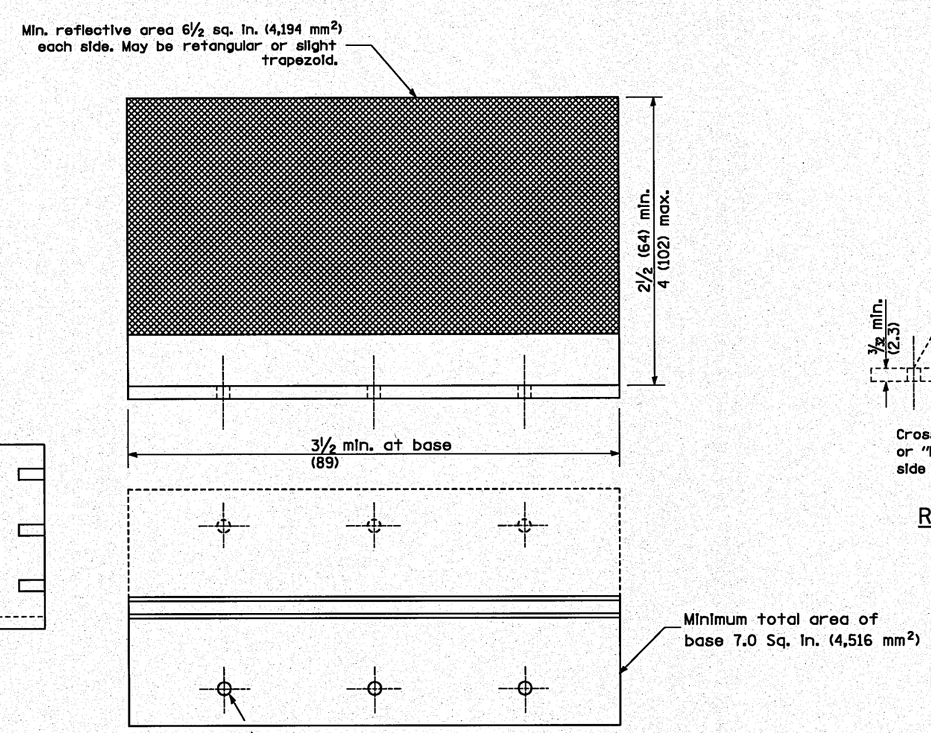

REFLECTOR MARKER TYPE C

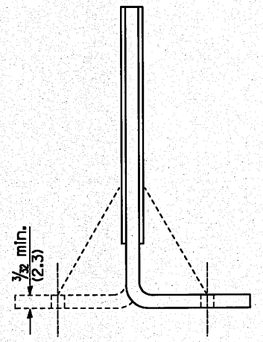

Cross section may be "T"
or "L" shaped and may have
side supports at ends.

REFLECTORS

All dimensions are in inches (millimeters)
unless otherwise noted.

FILE NAME = ©FILEL©	USER NAME = ©USER©	DESIGNED ST	REVISED -	STATE OF ILLINOIS DEPARTMENT OF TRANSPORTATION	DISTRICT 4 STANDARDS US-24 OVER LAMARSH CREEK	F.A.P. RTE. 317	SECTION 45BR-2	COUNTY PEORIA	TOTAL SHEETS 122 / SHEET NO. 102
		DRAWN ST	REVISED -				635101 PAGE 3 OF 3	CONTRACT NO. 68719	
	PLOT SCALE = ©SCALE©	CHECKED FML	REVISED -						
	PLOT DATE = ©DATE©	DATE 10-15-2010	REVISED -		SCALE: N.T.S. / SHEET NO. 15 OF 19 SHEETS / STA. / TO STA.	FED. ROAD DIST. NO.	ILLINOIS	FED. AID PROJECT	

PLAN — NOTE BOOK NO. ___ — SURVEYED / PLOTTED / ALIGNMENT CHECKED / GRADES CHECKED / ENG. PLAN PREPARED / CADD FILE NAME — BY — DATE

PROFILE — NOTE BOOK NO. ___ — SURVEYED / PLOTTED / GRADES CHECKED / ENG. NOTES PREPARED / PROFILE NOTATIONS CKKD — BY — DATE

PERMANENT SURVEY TIES

○ Permanent Survey Tie
□ Section Corner, 1/4 Corner, or other land corner.

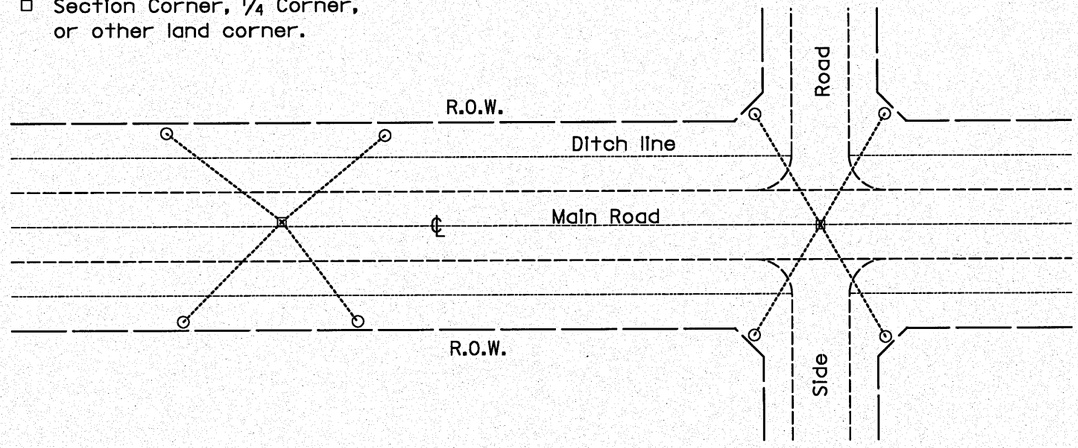

TYPICAL APPLICATION

GENERAL NOTES

1. The marker shall be cast in place of Class SI Concrete.
2. The marker shall be installed after the final seeding has been completed unless otherwise specified by the Engineer.
3. The tie distances to the section corner shall be measured and recorded by the IDOT Chief of Surveys.

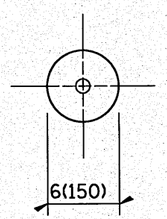

PLAN

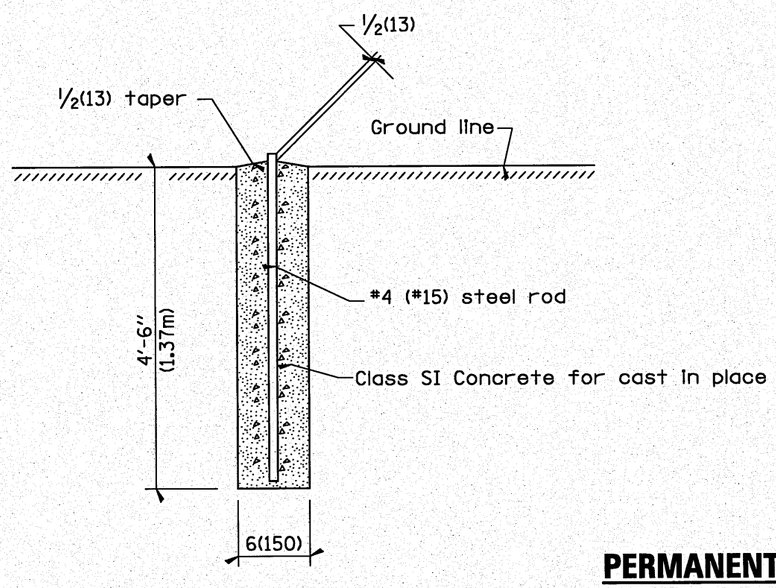

SECTION

PERMANENT SURVEY MARKERS

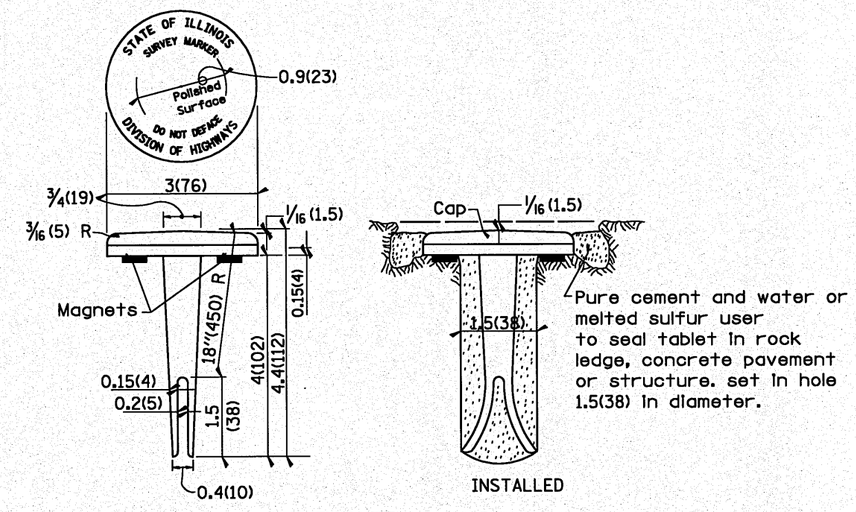

BRONZE TABLET - No Scale
TYPE I

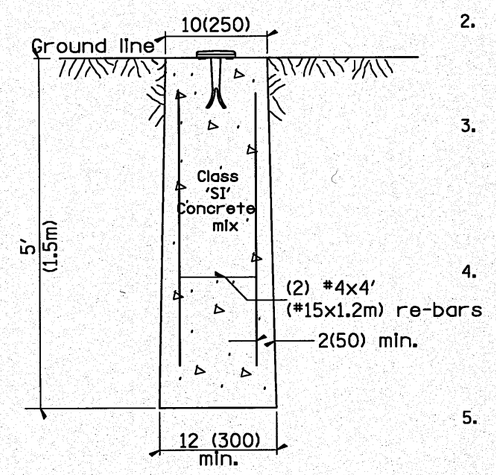

MARKER CAST IN PLACE
TYPE II

GENERAL NOTES

1. All type II markers shall be cast in place, and precast markers will not be allowed.
2. Two permanent magnets, each having a diameter of 3/4 (19) and a thickness of 1/4 (6), or equivalent, shall beattached to the underside of the tablet with an approved epoxy bonding agent.
3. The location of the markers shall be in accordance with the plans in general, the markers will be placed at the P.T.'s and P.C.'s of horizontal curves and spaces along the tangents in a way that a minimum of two markers are alway inter-visible, and not to exceed 1000' (300m).
4. The markers shall be placed under the direction of the Engineer and shall be installed in a workmanlike manner in order that there will be no further settlement or horizontal shifting. The monuments shall be placed in a way that the survey point will fall within the portion of the plaque provided for that purpose.
5. The project designation, the centerline station, the survey point, and the elevation shall be permanently marked by the use of metal dies after marker has been installed.

PERMANENT SURVEY TIE & PERMANENT SURVEY MARKERS TYPE I & TYPE II

All dimensions are in inches (millimeters) unless otherwise noted.

FILE NAME = ©FILEL©	USER NAME = ©USER©	DESIGNED ST	REVISED -
		DRAWN ST	REVISED -
	PLOT SCALE = ©SCALE©	CHECKED FML	REVISED -
	PLOT DATE = ©DATE©	DATE 10-15-2010	REVISED -

STATE OF ILLINOIS
DEPARTMENT OF TRANSPORTATION

DISTRICT 4 STANDARDS
US-24 OVER LAMARSH CREEK

SCALE: N.T.S. | SHEET NO. 16 OF 19 SHEETS | STA. | TO STA.

F.A.P. RTE.	SECTION	COUNTY	TOTAL SHEETS	SHEET NO.
317	45BR-2	PEORIA	122	103
	667101	CONTRACT NO. 68719		
FED. ROAD DIST. NO.	ILLINOIS	FED. AID PROJECT		

PLAN: NOTE BOOK NO. ___ | SURVEYED ___ | PLOTTED ___ | HORIZ. GRID CHECKED ___ | VERT. GRID CHECKED ___ | CADD FILE NAME ___ | BY | DATE

PROFILE: NOTE BOOK NO. ___ | SURVEYED ___ | PLOTTED ___ | GRADES CHECKED ___ | STRUCTURE NOTATIONS GRID ___ | BY | DATE

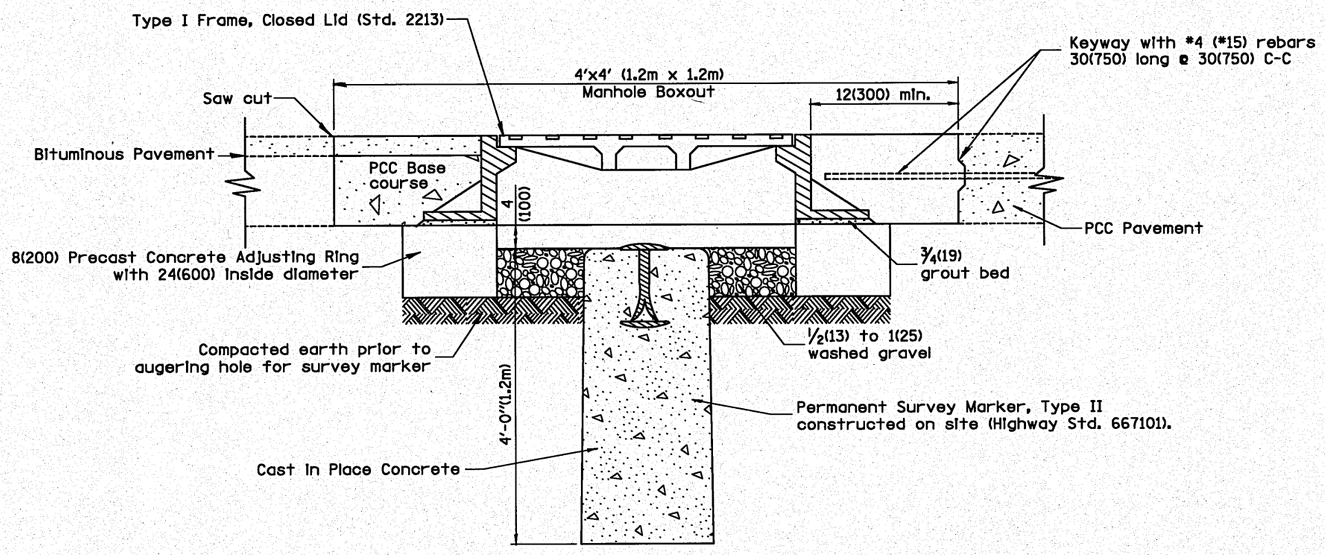

ELEVATION

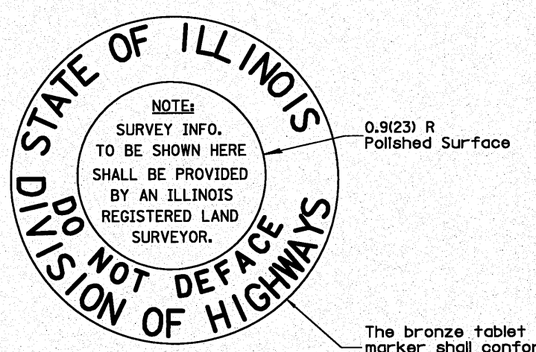

0.9(23) R
Polished Surface

The bronze tablet used for the permanent survey marker shall conform to Highwya Std. 667101, except the top surface shall be as shown.

TOP OF BRONZE TABLET

GENERAL NOTES:

1. This work shall be performed in accordance with Article 667.04.

PERMANENT SURVEY MARKERS TYPE II (SPECIAL)

All dimensions are in inches (millimeters) unless otherwise noted.

FILE NAME = ©FILEL©	USER NAME = ©USER©	DESIGNED ST	REVISED -	STATE OF ILLINOIS DEPARTMENT OF TRANSPORTATION	DISTRICT 4 STANDARDS US-24 OVER LAMARSH CREEK	F.A.P. RTE.	SECTION	COUNTY	TOTAL SHEETS	SHEET NO.
		DRAWN ST	REVISED -			317	45BR-2	PEORIA	122	104
	PLOT SCALE = ©SCALE©	CHECKED FML	REVISED -				667106	CONTRACT NO. 68719		
	PLOT DATE = ©DATE©	DATE 10-15-2010	REVISED -		SCALE: N.T.S. / SHEET NO. 17 OF 19 SHEETS / STA. / TO STA.	FED. ROAD DIST. NO.	ILLINOIS	FED. AID PROJECT		

PLAN — SURVEYED / PLOTTED / ALIGN BY / CHECKED / NOTE BOOK / NO. / CADD FILE NAME — BY — DATE

PROFILE — SURVEYED / PLOTTED / GRADES CHECKED / NOTE BOOK / NO. / STRUCTURE NOTATNS CHKD — BY — DATE

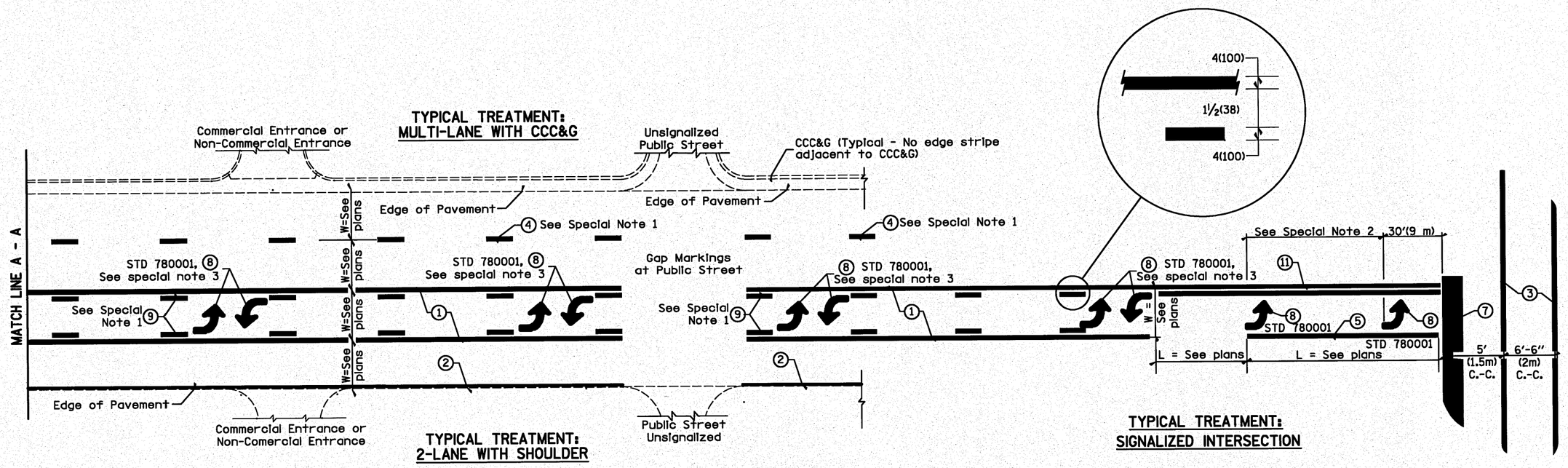

FLUSH PAVED MEDIAN: TWO-WAY LEFT TURN LANE WITH ONE-WAY LEFT TURN LANE AT SIGNALIZED INTERSECTION

TYPICAL PAVEMENT MARKING LEGEND

(Note: This is a District Standard Legend. Some elements may not apply to specific project.)

1. 4(100) Solid (Yellow)
2. 4(100) Solid (White)
3. 2-6(150) Crosswalk @ 6'-6" (2m)min C.-C. (White)
   2-8(200) Crosswalk @ 6'-6" (2m)min C.-C. (White) (When traffic signals are present.)
4. 6(150) Skip-Dash (White) — 10' (3.05m) / 30' (9.14m) / 10' (3.05m) (See Special Note 1)
5. 8(200) Solid (White)
6. 12(300) Diagonal (White) (Item 6 is shown on Std. 780001)
7. 24(600) Stop Bar (White)
8. Letters & Arrows — 33' (10m) (See Std. 780001 and Special Notes 2 & 3)
9. 4(100) Skip-Dash (Yellow) — 10' (3.05m) / 30' (9.14m) / 10' (3.05m) (See Special Note 1)
10. 12(300) Diagonal (Yellow) (See Table A) — 45°, 11(280) C.-C., See Table A
11. 4(100) Double Solid (Yellow)

SPECIAL NOTES

1. Skip-Dash markings will be centered between both ends of city blocks and shall be placed in alignment transversly across the pavement.
2. The following shall apply to arrows located in one-way left turn lanes:
   A. A minimum of two (2) arrows is required.
   B. The maximum spacing between arrows is 80' (24 m).
   C. Arrows shall be evenly spaced if three (3) or more are required.
3. The following shall apply to arrow pairs located in two-way left turn lanes:
   A. A minimum of two (2) arrow pairs is required.
   B. The maximum spacing between arrow pairs is 200' (61 m).
   C. Arrow pairs shall be evenly spaced if three (3) or more are required.
   D. The spacing between BI Directional Left Turn Arrows is 33' (10 m).

GENERAL NOTES

1. Refer to State Standard 780001 for additional Pavement Markings including letters & arrows.
2. See Plans for Pavement Markings adjacent to curbed islands and medians, and through lane reductions.

TYPICAL PAVEMENT MARKINGS

FILE NAME = ©FILEL©	USER NAME = ©USER©	DESIGNED ST	REVISED -	STATE OF ILLINOIS DEPARTMENT OF TRANSPORTATION	DISTRICT 4 STANDARDS US-24 OVER LAMARSH CREEK	F.A.P. RTE. 317	SECTION 45BR-2	COUNTY PEORIA	TOTAL SHEETS 122 / SHEET NO. 105
		DRAWN ST	REVISED -				780001 PAGE 1 OF 2	CONTRACT NO. 68719	
	PLOT SCALE = ©SCALE©	CHECKED FML	REVISED -		SCALE: N.T.S. / SHEET NO. 18 OF 19 SHEETS / STA. / TO STA.	FED. ROAD DIST. NO.	ILLINOIS	FED. AID PROJECT	
	PLOT DATE = ©DATE©	DATE 10-15-2010	REVISED -						

PLAN: SURVEYED / PLOTTED / ALIGNMENT CHECKED / RT. OF WAY CHECKED / CADD FILE NAME / NOTE BOOK NO. ____ / BY / DATE

PROFILE: SURVEYED / PLOTTED / GRADES CHECKED / ALIGNMENT CHECKED / STRUCTURE ©STATYPE CHKD / NOTE BOOK NO. ____ / BY / DATE

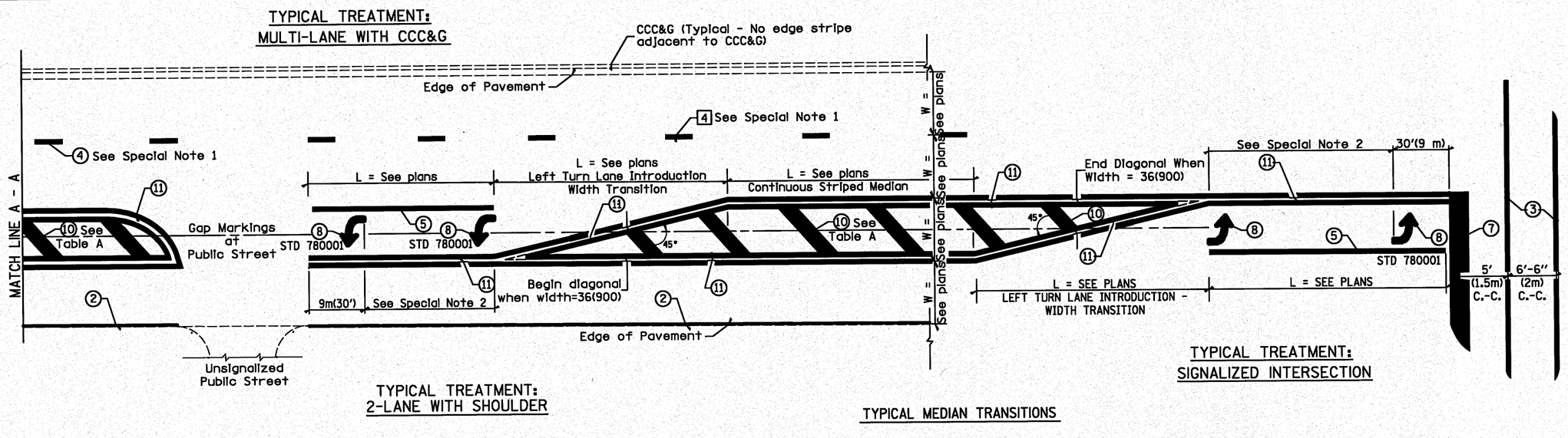

FLUSH PAVED MEDIAN: RESTRICTED LEFT TURN LANE

TABLE A

RECOMMENDED SPACING BETWEEN DIAGONAL LINES

SPEED LIMIT RANGE	CONTINUOUS	INTERSECTION CHANNELIZATION (Includes Width Transitions for Median and Left Turn Lane Introductions)
Less Than 30 mph (50 km/h)	50' (15m)	15' (5m)
30 - 45 mph (50 - 70 km/h)	75' (23m)	20' (6m)
Over 45 mph (70 km/h)	150' (46m)	30' (9m)

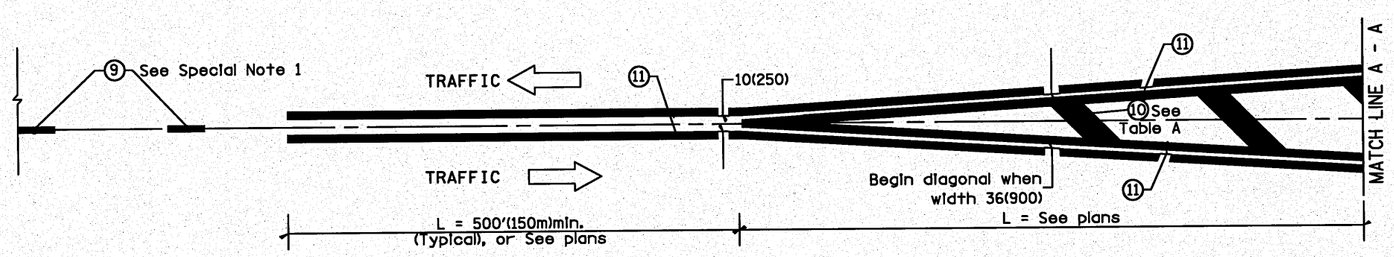

MEDIAN INTRODUCTION - WIDTH TRANSITIONS

All dimensions are in inches (millimeters) unless otherwise noted.

FILE NAME = ©FILEL©	USER NAME = ©USER©	DESIGNED ST	REVISED -	STATE OF ILLINOIS DEPARTMENT OF TRANSPORTATION	DISTRICT 4 STANDARDS US-24 OVER LAMARSH CREEK	F.A.P. RTE.	SECTION	COUNTY	TOTAL SHEETS / SHEET NO.
		DRAWN ST	REVISED -			317	45BR-2	PEORIA	122 / 106
	PLOT SCALE = ©SCALE©	CHECKED FML	REVISED -				780001 PAGE 2 OF 2	CONTRACT NO. 68719	
	PLOT DATE = ©DATE©	DATE 10-15-2010	REVISED -		SCALE: N.T.S. / SHEET NO. 19 OF 19 SHEETS / STA. / TO STA.	FED. ROAD DIST. NO.	ILLINOIS	FED. AID PROJECT	

PLAN — NOTE BOOK NO. ____ — SURVEYED / PLOTTED / ALIGNMENT CHECKED / RT.-OF-WAY CHECKED / CADD FILE NAME — BY — DATE

PROFILE — NOTE BOOK NO. ____ — SURVEYED / PLOTTED / GRADES CHECKED / PROFILE NOTED / STRUCTURE NOTAT'NS CHKD — BY — DATE

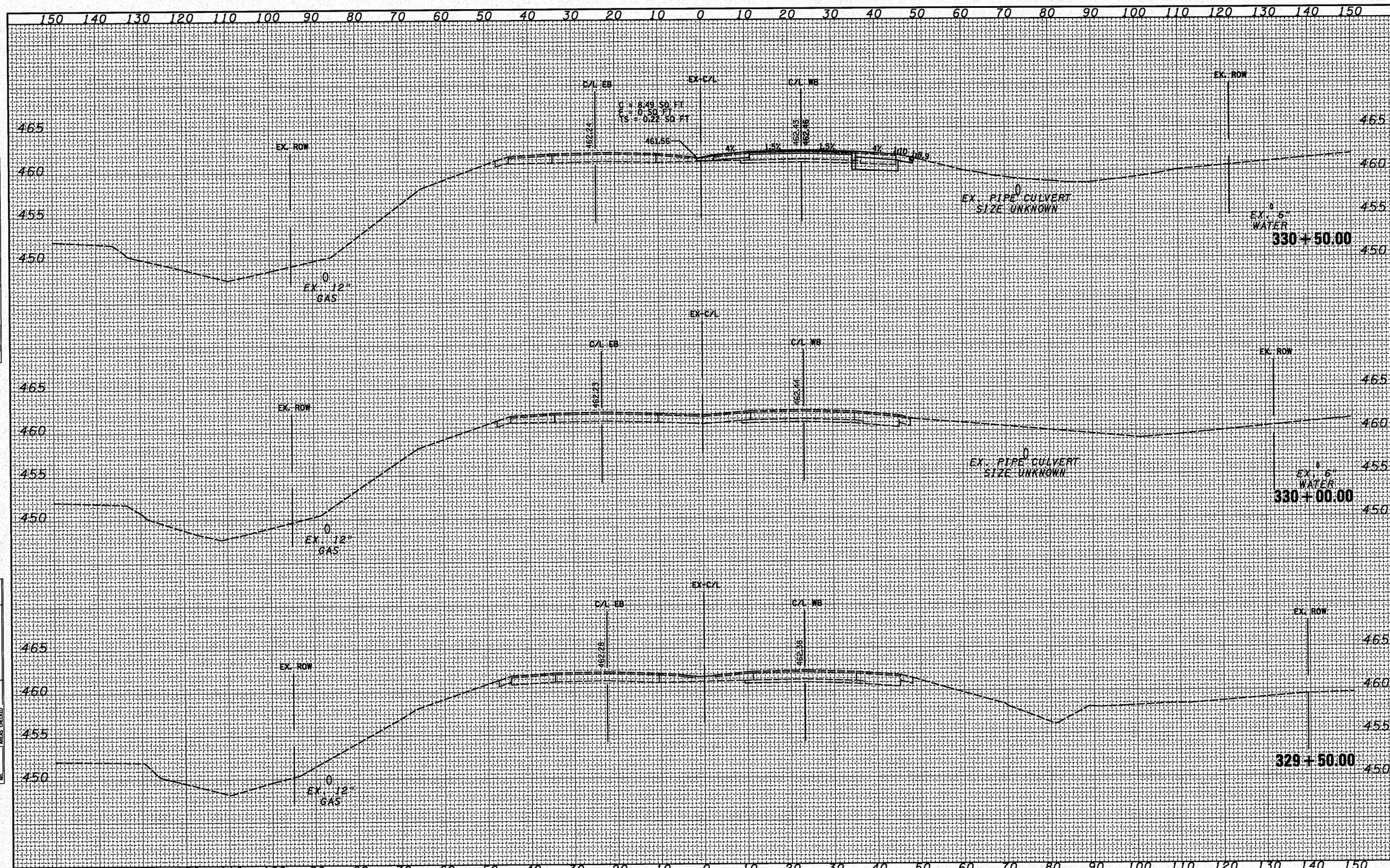

FINAL SURVEY	SURVEYED	BY	DATE
NOTE BOOK	PLOTTED		
NO.	TEMPLATE		
	AREAS		
	AREAS CHECKED		

ORIGINAL SURVEY	SURVEYED	BY	DATE
NOTE BOOK	PLOTTED		
NO.	TEMPLATE		
	AREAS		
	AREAS CHECKED		

FILE NAME = ©FILEL©	USER NAME = ©USER©	DESIGNED - ST	REVISED -
		DRAWN - ST	REVISED -
	PLOT SCALE = ©SCALE©	CHECKED - FML	REVISED -
	PLOT DATE = ©DATE©	DATE - 10-15-2010	REVISED -

STATE OF ILLINOIS
DEPARTMENT OF TRANSPORTATION

CROSS SECTIONS
US ROUTE 24 OVER LAMARSH CREEK

SCALE: 1"=10'H, 5'V | SHEET NO. 1 OF 11 SHEETS | STA. 329+50.00 TO STA. 330+50.00

F.A.P. RTE.	SECTION	COUNTY	TOTAL SHEETS	SHEET NO.
317	45BR-2	PEORIA	122	107

CONTRACT NO. 68719

ILLINOIS FED. AID PROJECT

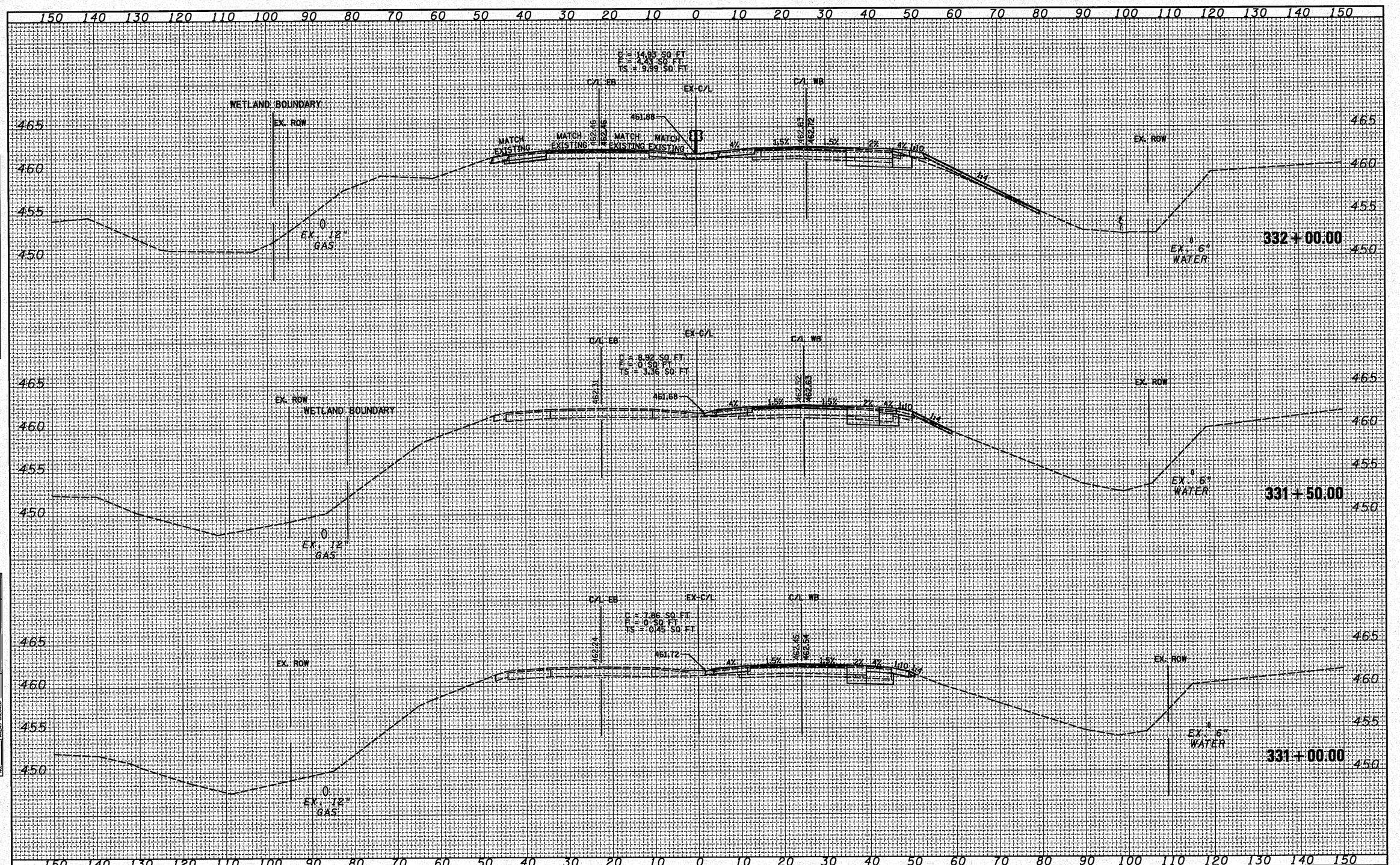

FINAL SURVEY	SURVEYED	BY	DATE
	PLOTTED		
NOTE BOOK	TEMPLATE		
NO.	AREAS		
	AREAS CHECKED		

ORIGINAL SURVEY	SURVEYED	BY	DATE
	PLOTTED		
NOTE BOOK	TEMPLATE		
NO.	AREAS		
	AREAS CHECKED		

FILE NAME = ©FILEL©	USER NAME = ©USER©	DESIGNED - ST	REVISED -
		DRAWN - ST	REVISED -
	PLOT SCALE = ©SCALE©	CHECKED - FML	REVISED -
	PLOT DATE = ©DATE©	DATE - 10-15-2010	REVISED -

STATE OF ILLINOIS
DEPARTMENT OF TRANSPORTATION

CROSS SECTIONS
US ROUTE 24 OVER LAMARSH CREEK

SCALE: 1"=10'H, 5'V | SHEET NO. 2 OF 11 SHEETS | STA. 331+00.00 TO STA. 332+00.00

F.A.P. RTE.	SECTION	COUNTY	TOTAL SHEETS	SHEET NO.
317	45BR-2	PEORIA	122	108
		CONTRACT NO. 68719		
		ILLINOIS FED. AID PROJECT		

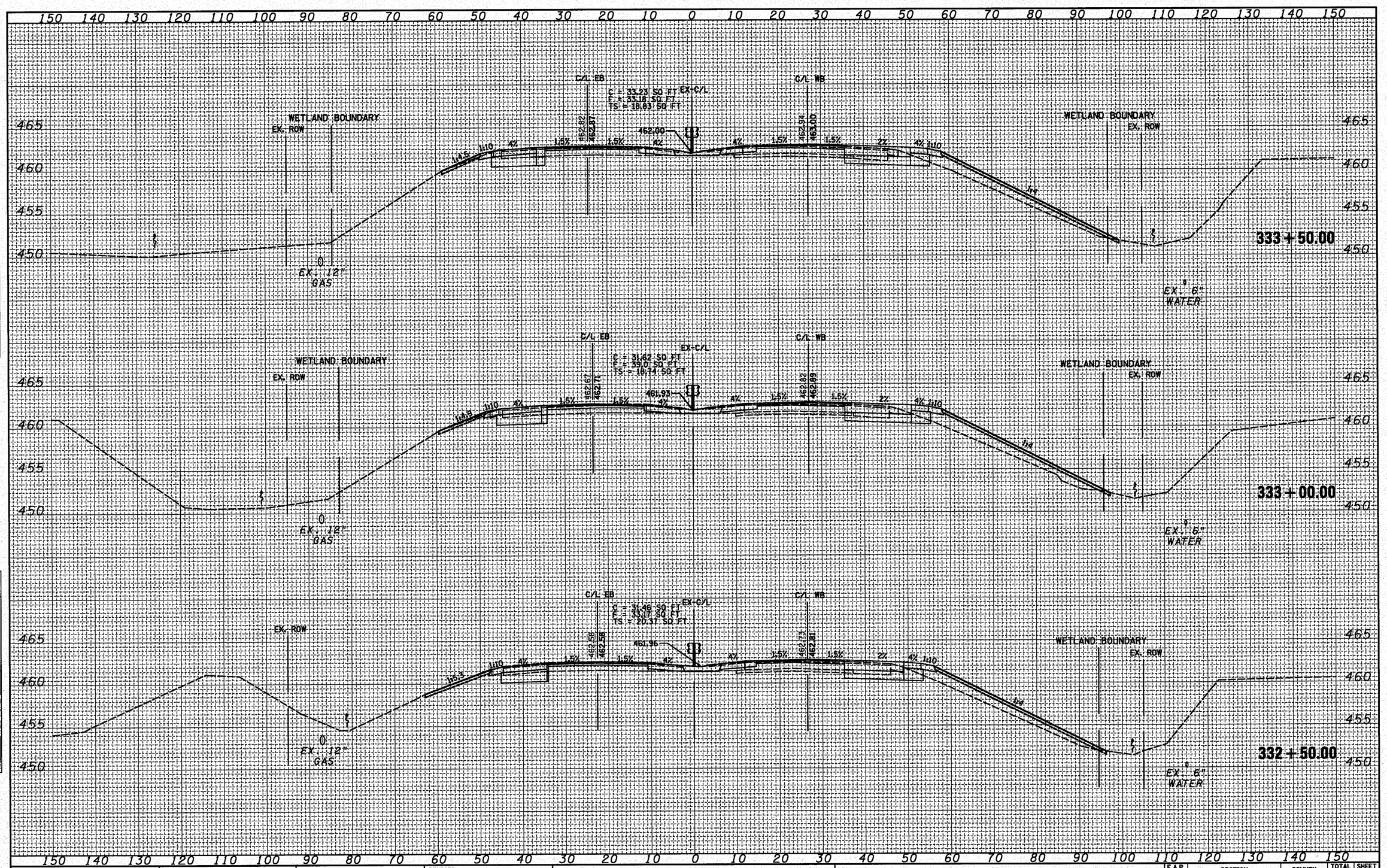

FILE NAME = ◆FILEL◆	USER NAME = ◆USER◆	DESIGNED - ST	REVISED -
		DRAWN - ST	REVISED -
	PLOT SCALE = ◆SCALE◆	CHECKED - FML	REVISED -
	PLOT DATE = ◆DATE◆	DATE - 10-15-2010	REVISED -

STATE OF ILLINOIS
DEPARTMENT OF TRANSPORTATION

CROSS SECTIONS
US ROUTE 24 OVER LAMARSH CREEK

SCALE: 1"=10'H, 5'V | SHEET NO. 3 OF 11 SHEETS | STA. 332+50.00 TO STA. 333+50.00

F.A.P. RTE.	SECTION	COUNTY	TOTAL SHEETS	SHEET NO.
317	45BR-2	PEORIA	122	109

CONTRACT NO. 68719

ILLINOIS FED. AID PROJECT

FINAL SURVEY — NOTE BOOK NO. — SURVEYED — PLOTTED — TEMPLATE — AREAS — AREAS CHECKED — BY

ORIGINAL SURVEY — NOTE BOOK NO. — SURVEYED — PLOTTED — TEMPLATE — AREAS — AREAS CHECKED — BY — DATE

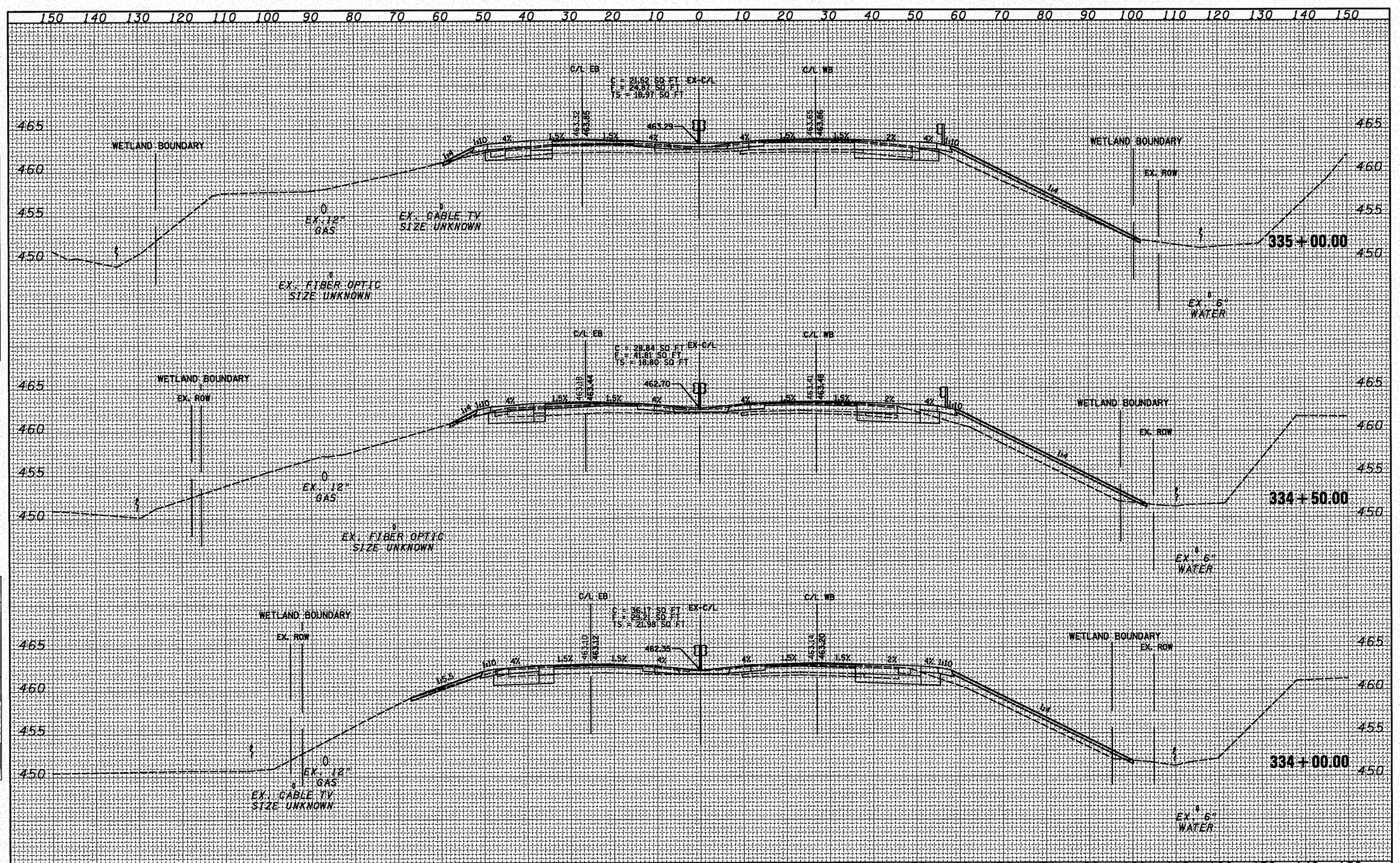

FINAL SURVEY	BY	DATE
SURVEYED		
PLOTTED		
TEMPLATE		
AREAS		
AREAS CHECKED		
NOTE BOOK		
NO.		

ORIGINAL SURVEY	BY	DATE
SURVEYED		
PLOTTED		
TEMPLATE		
AREAS		
AREAS CHECKED		
NOTE BOOK		
NO.		

FILE NAME = ©FILEL©	USER NAME = ©USER©	DESIGNED - ST	REVISED -
		DRAWN - ST	REVISED -
	PLOT SCALE = ©SCALE©	CHECKED - FML	REVISED -
	PLOT DATE = ©DATE©	DATE - 10-15-2010	REVISED -

STATE OF ILLINOIS
DEPARTMENT OF TRANSPORTATION

CROSS SECTIONS
US ROUTE 24 OVER LAMARSH CREEK

SCALE: 1"=10'H, 5'V | SHEET NO. 4 OF 11 SHEETS | STA. 334+00.00 TO STA. 335+00.00

F.A.P. RTE.	SECTION	COUNTY	TOTAL SHEETS	SHEET NO.
317	45BR-2	PEORIA	122	110
		CONTRACT NO. 68719		
		ILLINOIS FED. AID PROJECT		

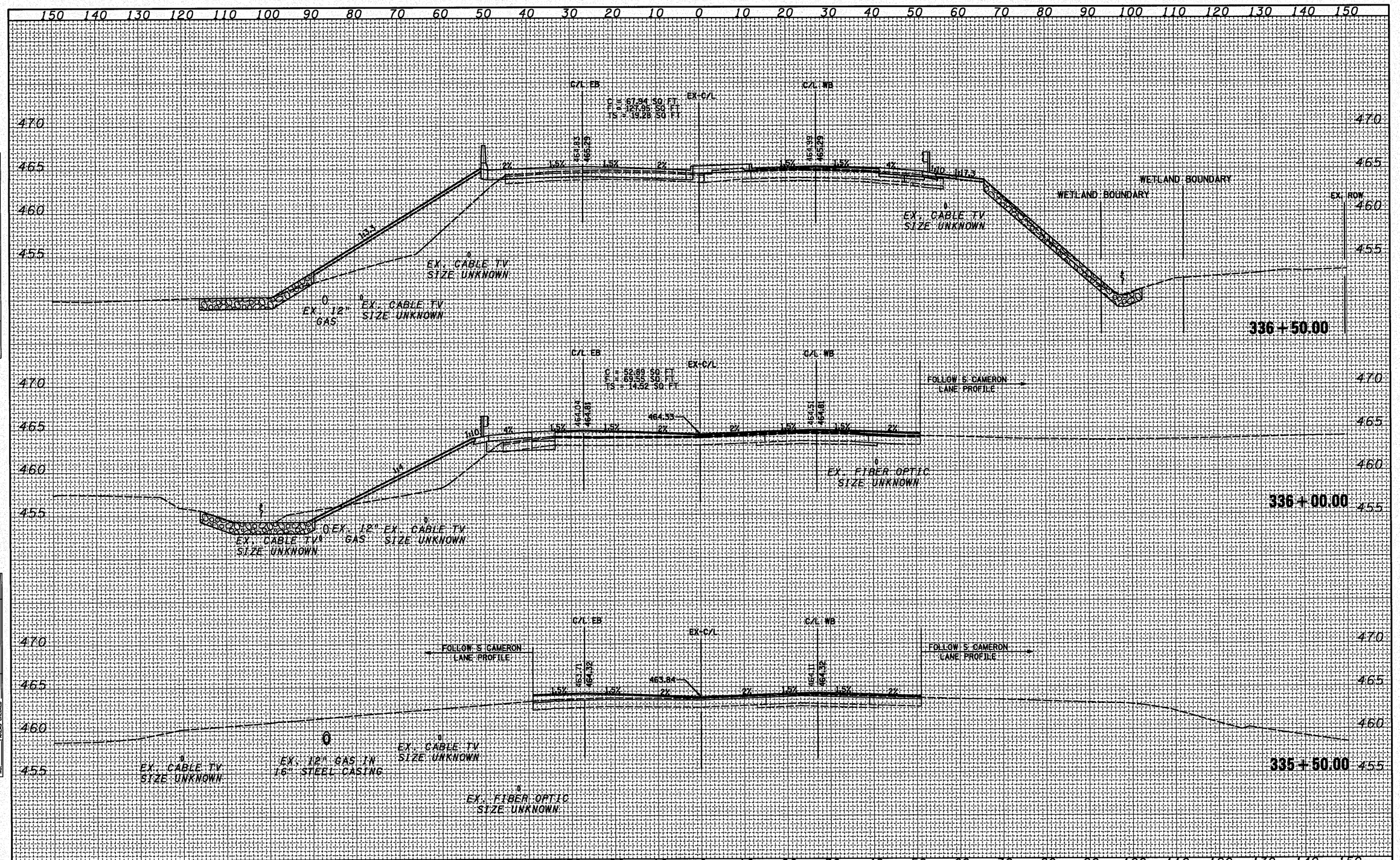

FINAL SURVEY	BY	DATE
SURVEYED		
PLOTTED		
TEMPLATE		
AREAS		
AREAS CHECKED		
NOTE BOOK NO.		

ORIGINAL SURVEY	BY	DATE
SURVEYED		
PLOTTED		
TEMPLATE		
AREAS		
AREAS CHECKED		
NOTE BOOK NO.		

FILE NAME = ©FILE©	USER NAME = ©USER©	DESIGNED - ST	REVISED -
		DRAWN - ST	REVISED -
	PLOT SCALE = ©SCALE©	CHECKED - FML	REVISED -
	PLOT DATE = ©DATE©	DATE - 10-15-2010	REVISED -

STATE OF ILLINOIS
DEPARTMENT OF TRANSPORTATION

CROSS SECTIONS
US ROUTE 24 OVER LAMARSH CREEK

SCALE: 1"=10'H, 5'V | SHEET NO. 5 OF 11 SHEETS | STA. 335+50.00 TO STA. 336+50.00

F.A.P. RTE.	SECTION	COUNTY	TOTAL SHEETS	SHEET NO.
317	45BR-2	PEORIA	122	111
		CONTRACT NO. 68719		
		ILLINOIS FED. AID PROJECT		

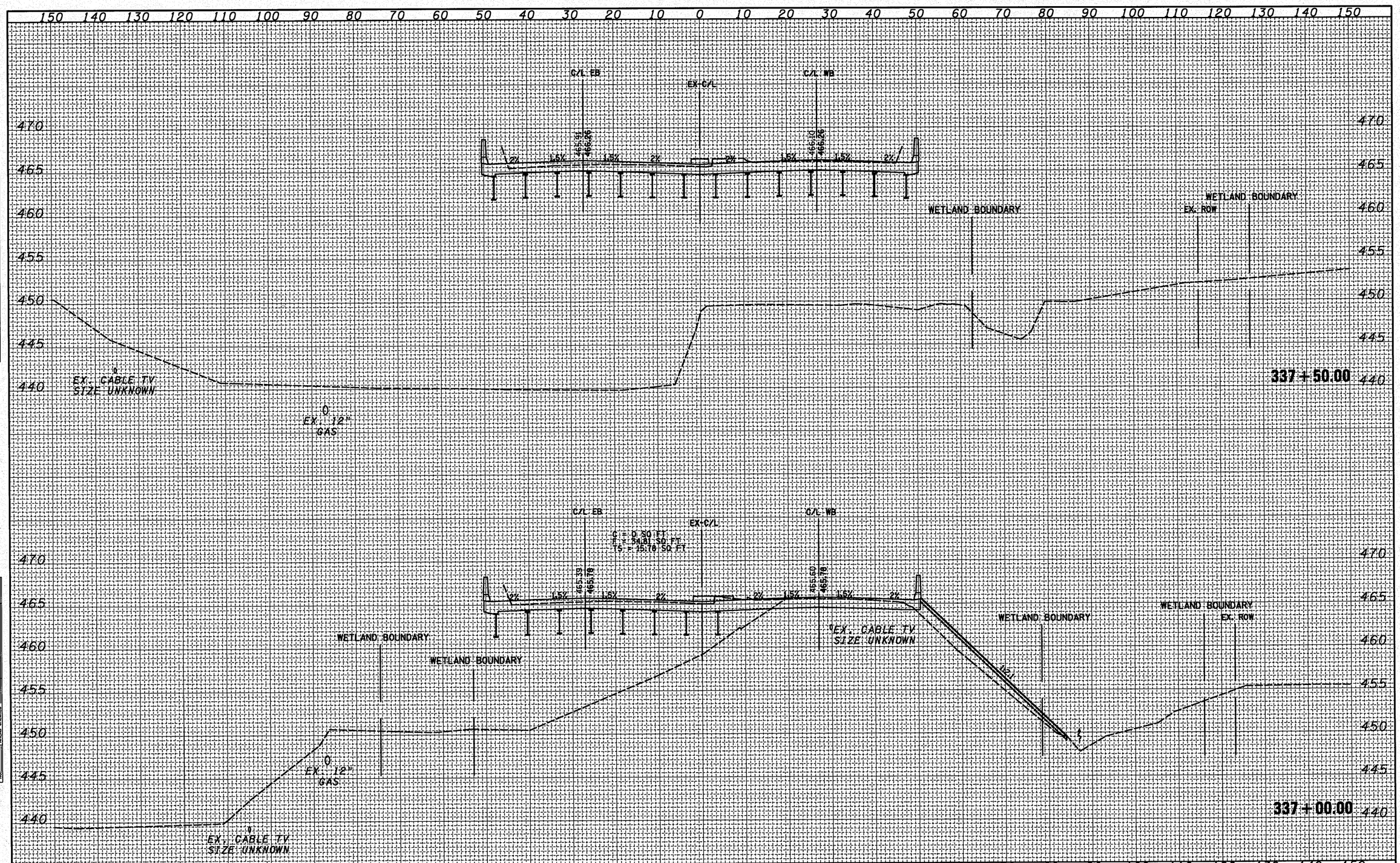

FINAL SURVEY	BY	DATE
SURVEYED		
PLOTTED		
TEMPLATE		
AREAS		
AREAS CHECKED		
NOTE BOOK NO.		

ORIGINAL SURVEY	BY	DATE
SURVEYED		
PLOTTED		
TEMPLATE		
AREAS		
AREAS CHECKED		
NOTE BOOK NO.		

FILE NAME = ©FILEL©	USER NAME = ©USER©	DESIGNED - ST	REVISED -
		DRAWN - ST	REVISED -
	PLOT SCALE = ©SCALE©	CHECKED - FML	REVISED -
	PLOT DATE = ©DATE©	DATE - 10-15-2010	REVISED -

STATE OF ILLINOIS
DEPARTMENT OF TRANSPORTATION

CROSS SECTIONS
US ROUTE 24 OVER LAMARSH CREEK

SCALE: 1"=10'H, 5'V | SHEET NO. 6 OF 11 SHEETS | STA. 337+00.00 TO STA. 337+50.00

F.A.P. RTE.	SECTION	COUNTY	TOTAL SHEETS	SHEET NO.
317	45BR-2	PEORIA	122	112
		CONTRACT NO. 68719		
		ILLINOIS FED. AID PROJECT		

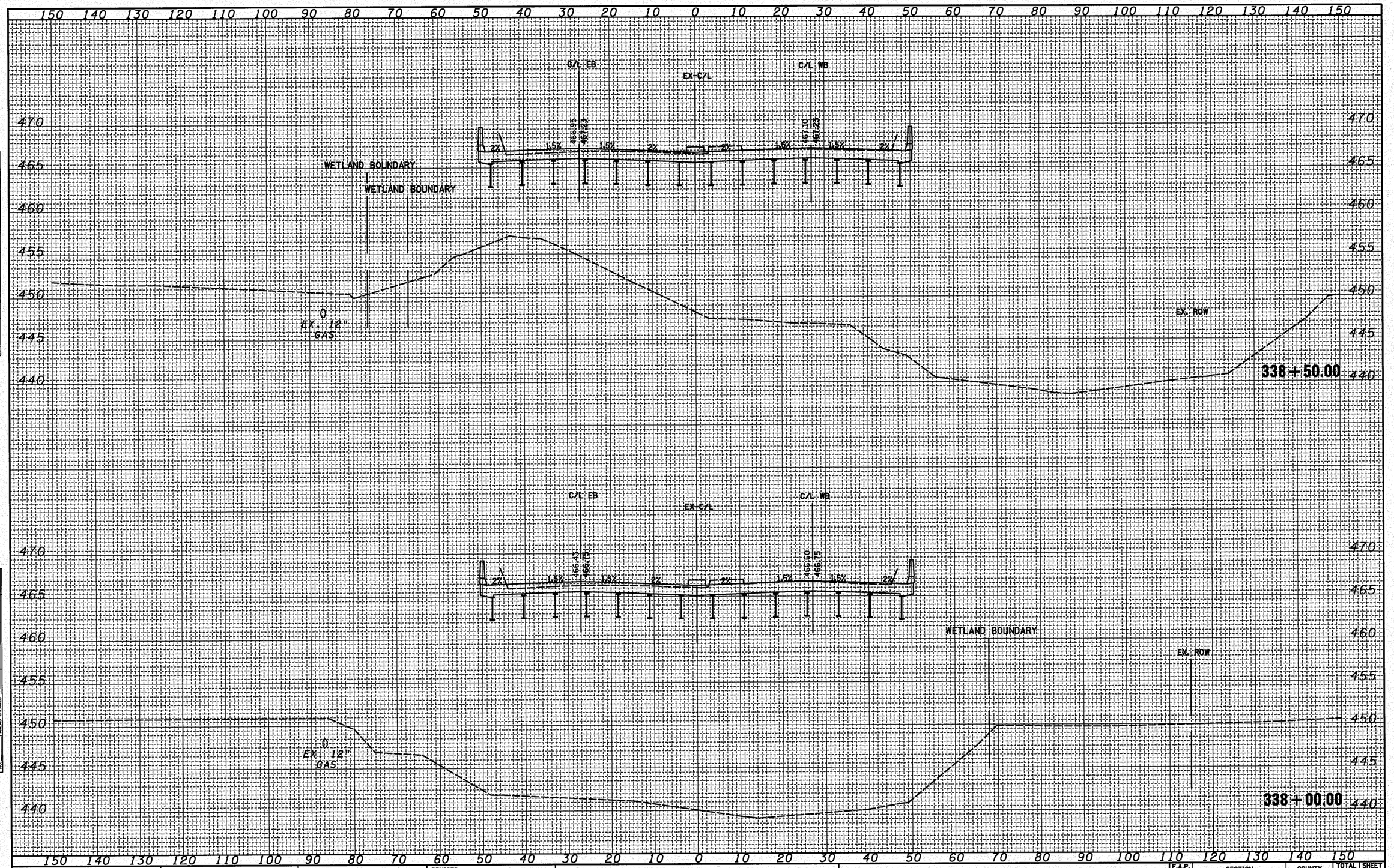

FINAL SURVEY	BY	DATE
SURVEYED		
PLOTTED		
TEMPLATE		
AREAS		
AREAS CHECKED		
NOTE BOOK		
NO.		

ORIGINAL SURVEY	BY	DATE
SURVEYED		
PLOTTED		
TEMPLATE		
AREAS		
AREAS CHECKED		
NOTE BOOK		
NO.		

FILE NAME = ©FILEL©	USER NAME = ©USER©	DESIGNED - ST	REVISED -
		DRAWN - ST	REVISED -
	PLOT SCALE = ©SCALE©	CHECKED - FML	REVISED -
	PLOT DATE = ©DATE©	DATE - 10-15-2010	REVISED -

STATE OF ILLINOIS
DEPARTMENT OF TRANSPORTATION

CROSS SECTIONS
US ROUTE 24 OVER LAMARSH CREEK

SCALE: 1"=10'H, 5'V | SHEET NO. 7 OF 11 SHEETS | STA. 338+00.00 TO STA. 338+50.00

F.A.P. RTE.	SECTION	COUNTY	TOTAL SHEETS	SHEET NO.
317	45BR-2	PEORIA	122	113

CONTRACT NO. 68719

ILLINOIS FED. AID PROJECT

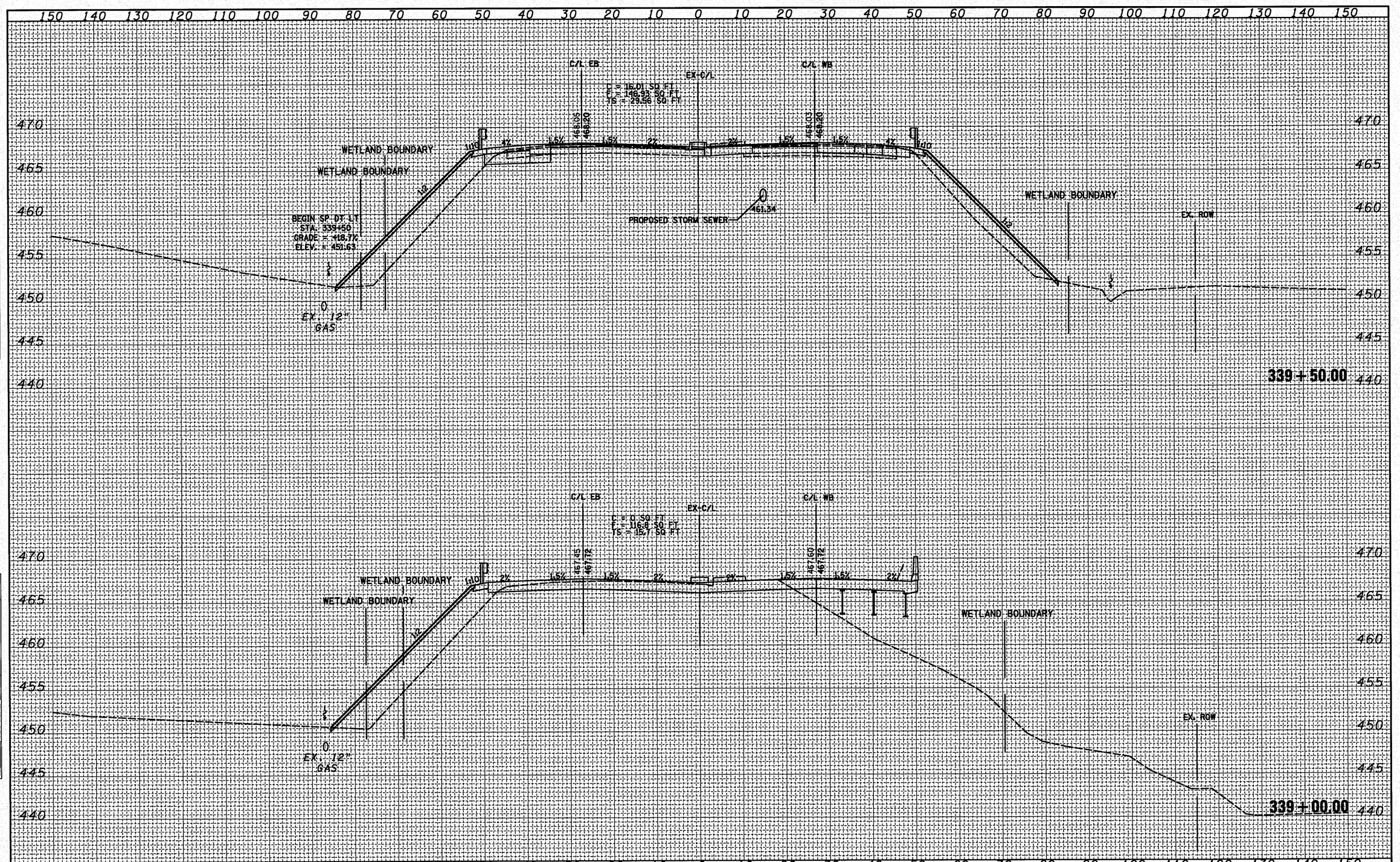

FINAL SURVEY	SURVEYED	BY	DATE
NOTE BOOK	PLOTTED		
NO.	TEMPLATE		
	AREAS		
	AREAS CHECKED		

ORIGINAL SURVEY	SURVEYED	BY	DATE
NOTE BOOK	PLOTTED		
NO.	TEMPLATE		
	AREAS		
	AREAS CHECKED		

FILE NAME = ©FILEL©	USER NAME = ©USER©	DESIGNED - ST	REVISED -
		DRAWN - ST	REVISED -
	PLOT SCALE = ©SCALE©	CHECKED - FML	REVISED -
	PLOT DATE = ©DATE©	DATE - 10-15-2010	REVISED -

STATE OF ILLINOIS
DEPARTMENT OF TRANSPORTATION

CROSS SECTIONS
US ROUTE 24 OVER LAMARSH CREEK

SCALE: 1"=10'H, 5'V | SHEET NO. 8 OF 11 SHEETS | STA. 339+00.00 TO STA. 339+50.00

F.A.P. RTE.	SECTION	COUNTY	TOTAL SHEETS	SHEET NO.
317	45BR-2	PEORIA	122	114
		CONTRACT NO. 68719		
		ILLINOIS FED. AID PROJECT		

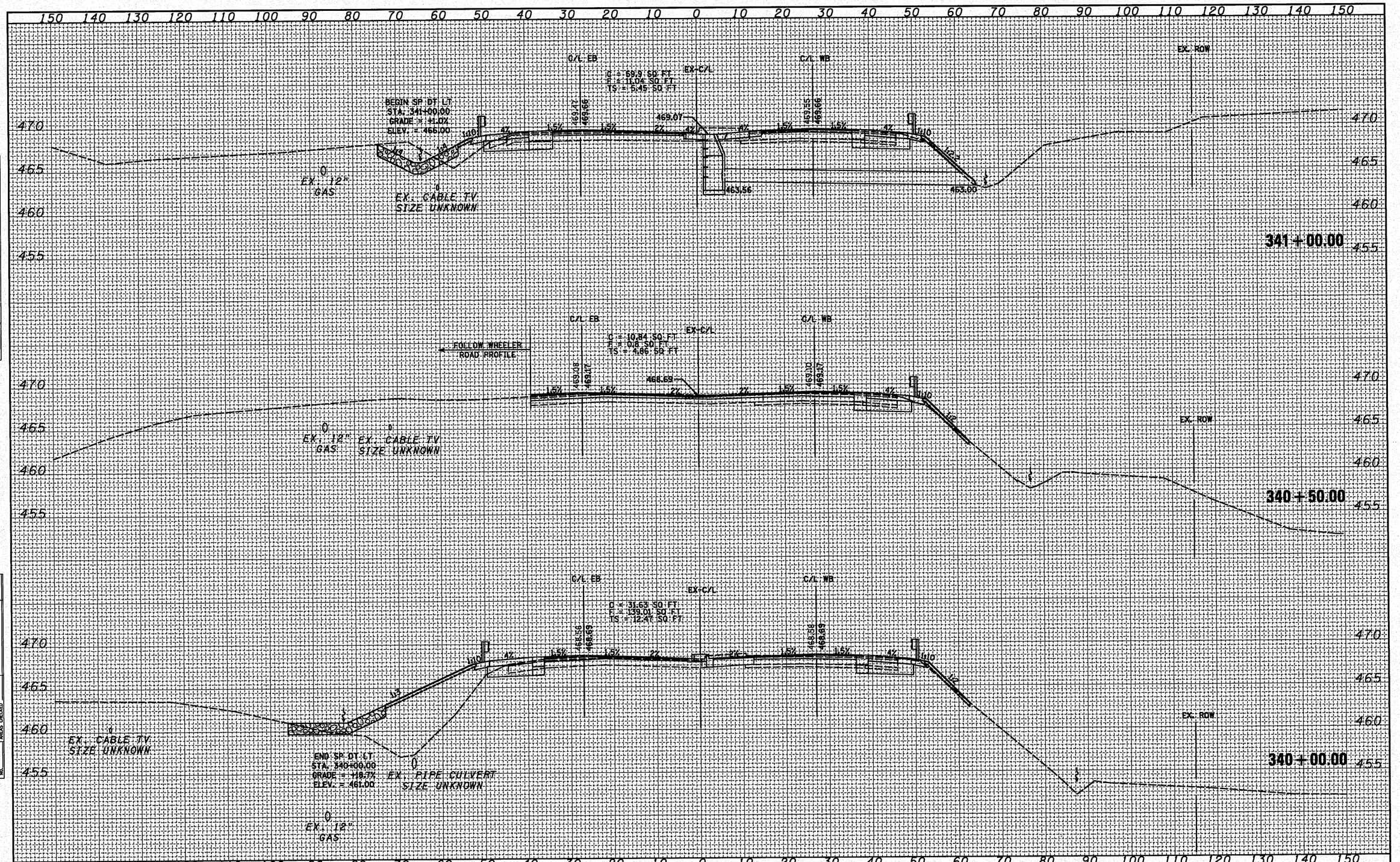

FINAL SURVEY		BY	DATE
NOTE BOOK	SURVEYED		
NO.	PLOTTED		
	TEMPLATE		
	AREAS		
	AREAS CHECKED		

ORIGINAL SURVEY		BY	DATE
NOTE BOOK	SURVEYED		
NO.	PLOTTED		
	TEMPLATE		
	AREAS		
	AREAS CHECKED		

FILE NAME = ◆FILEL◆	USER NAME = ◆USER◆	DESIGNED - ST	REVISED -
		DRAWN - ST	REVISED -
	PLOT SCALE = ◆SCALE◆	CHECKED - FML	REVISED -
	PLOT DATE = ◆DATE◆	DATE - 10-15-2010	REVISED -

STATE OF ILLINOIS
DEPARTMENT OF TRANSPORTATION

CROSS SECTIONS
US ROUTE 24 OVER LAMARSH CREEK

SCALE: 1"=10'H, 5'V | SHEET NO. 9 OF 11 SHEETS | STA. 340+00.00 TO STA. 341+00.00

F.A.P. RTE.	SECTION	COUNTY	TOTAL SHEETS	SHEET NO.
317	45BR-2	PEORIA	122	115

CONTRACT NO. 68719

ILLINOIS FED. AID PROJECT

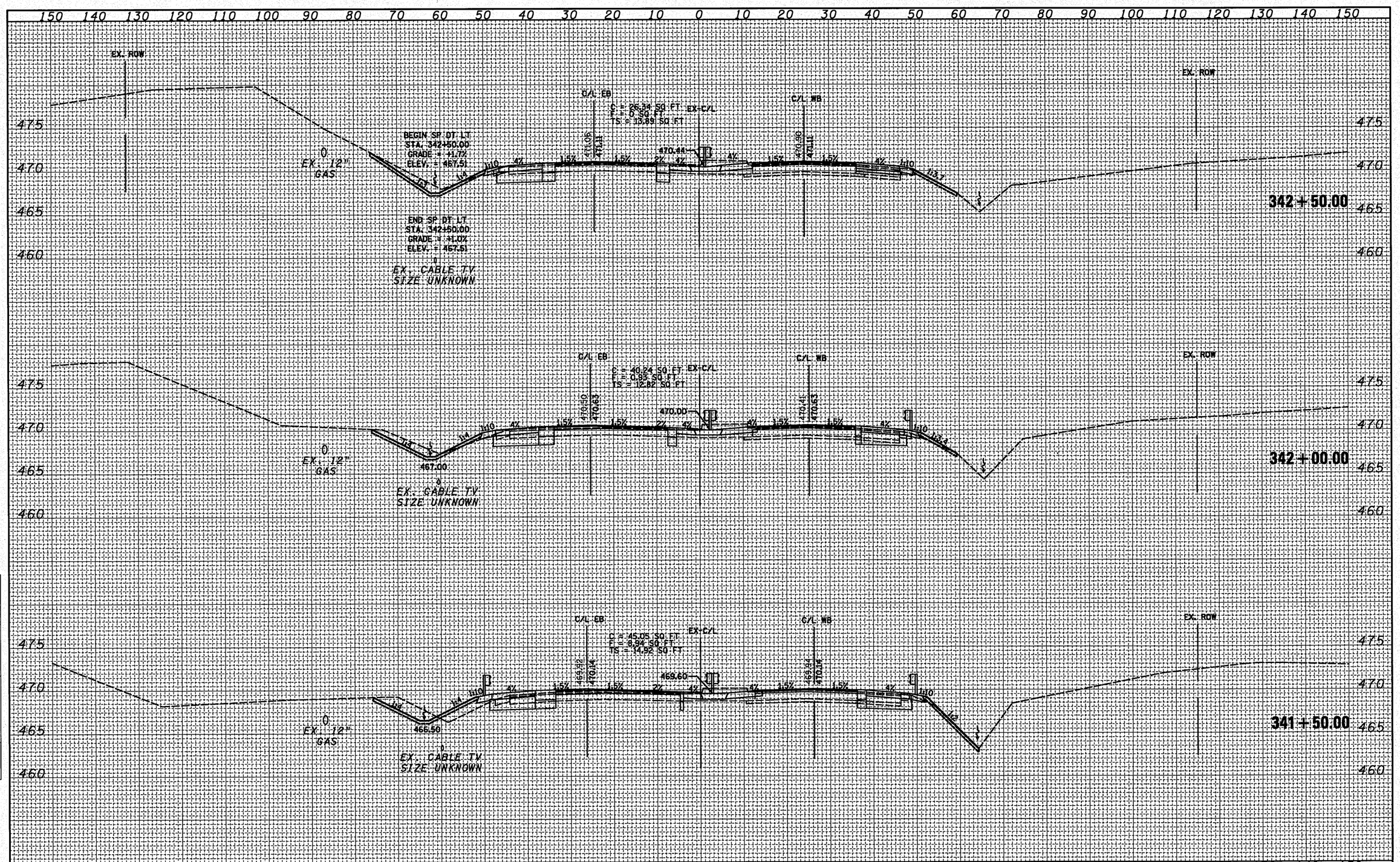

FILE NAME = ©FILE©	USER NAME = ©USER©	DESIGNED - ST	REVISED -
		DRAWN - ST	REVISED -
	PLOT SCALE = ©SCALE©	CHECKED - FML	REVISED -
	PLOT DATE = ©DATE©	DATE - 10-15-2010	REVISED -

STATE OF ILLINOIS
DEPARTMENT OF TRANSPORTATION

CROSS SECTIONS
US ROUTE 24 OVER LAMARSH CREEK

SCALE: 1"=10'H, 5'V | SHEET NO. 10 OF 11 SHEETS | STA. 341+50.00 TO STA. 342+50.00

F.A.P. RTE.	SECTION	COUNTY	TOTAL SHEETS	SHEET NO.
317	45BR-2	PEORIA	122	116
		CONTRACT NO. 68719		
		ILLINOIS FED. AID PROJECT		

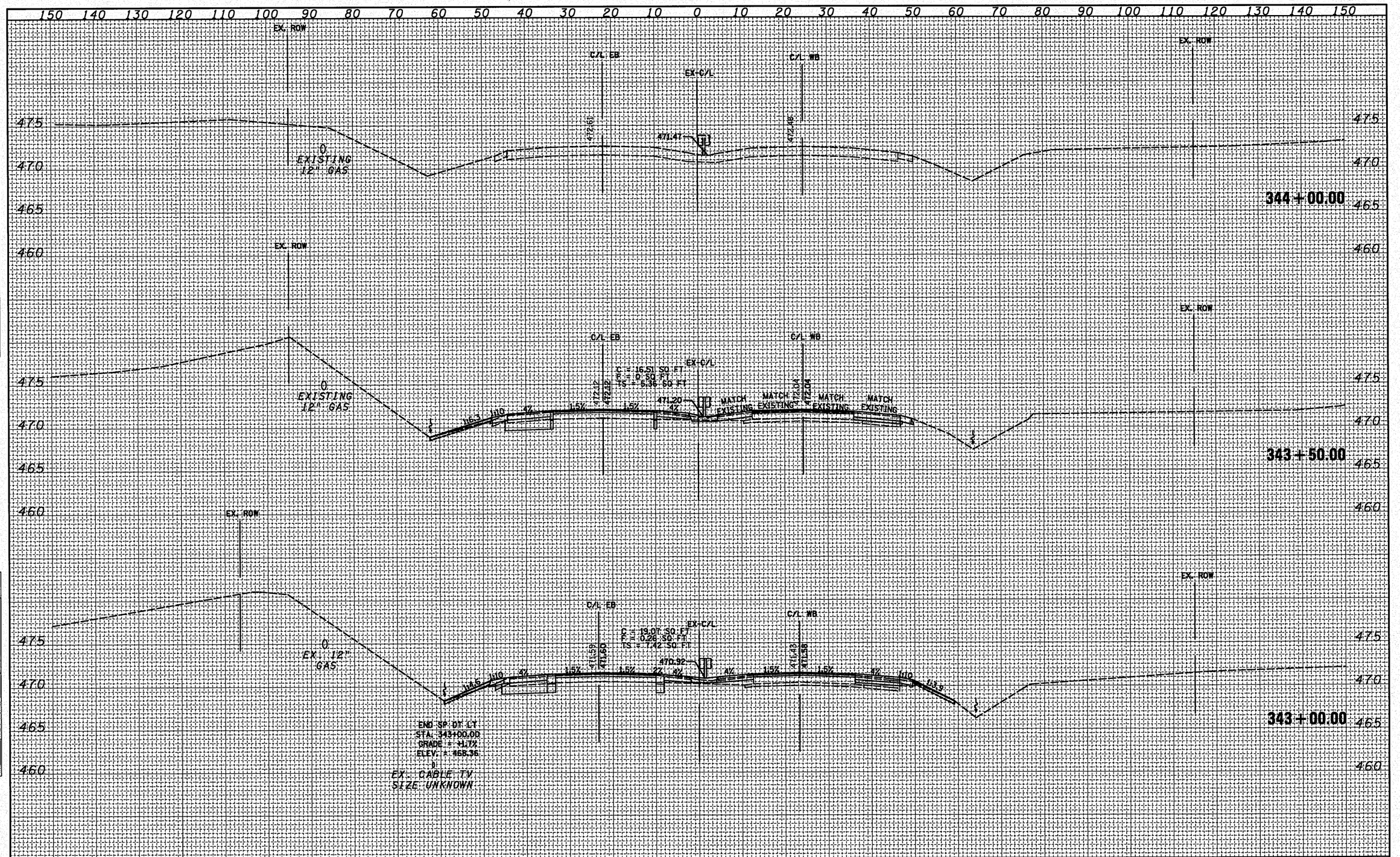

FILE NAME = #FILEL#	USER NAME = #USER#	DESIGNED - ST	REVISED -
		DRAWN - ST	REVISED -
	PLOT SCALE = #SCALE#	CHECKED - FML	REVISED -
	PLOT DATE = #DATE#	DATE - 10-15-2010	REVISED -

STATE OF ILLINOIS
DEPARTMENT OF TRANSPORTATION

CROSS SECTIONS
US ROUTE 24 OVER LAMARSH CREEK

SCALE: 1"=10'H, 5'V | SHEET NO. 11 OF 11 SHEETS | STA. 343+00.00 TO STA. 344+00.00

F.A.P. RTE.	SECTION	COUNTY	TOTAL SHEETS	SHEET NO.
317	45BR-2	PEORIA	122	117

CONTRACT NO. 68719

ILLINOIS FED. AID PROJECT

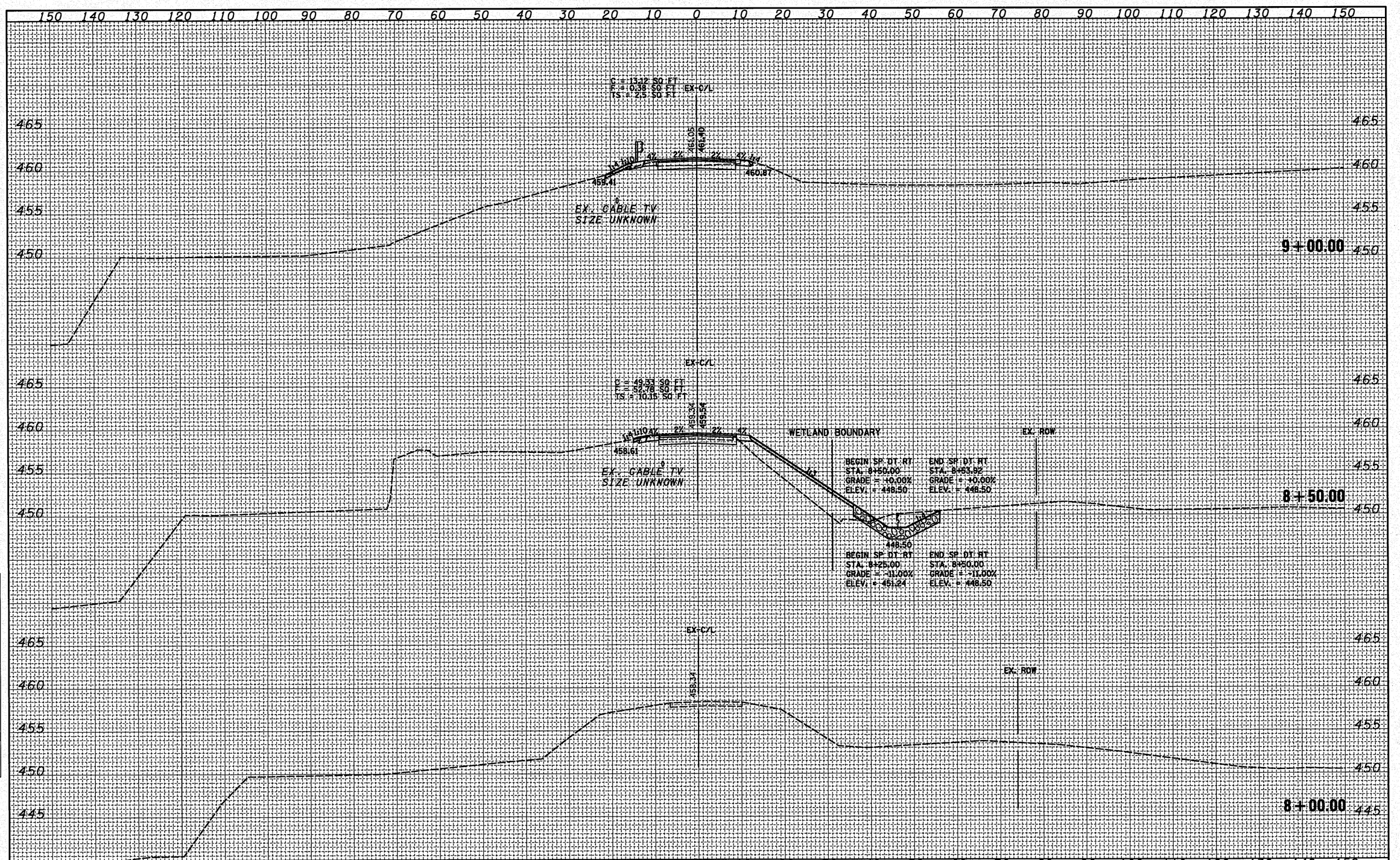

FILE NAME = ©FILEL©	USER NAME = ©USER©	DESIGNED - ST	REVISED -
		DRAWN - ST	REVISED -
	PLOT SCALE = ©SCALE©	CHECKED - FML	REVISED -
	PLOT DATE = ©DATE©	DATE - 10-15-2010	REVISED -

STATE OF ILLINOIS
DEPARTMENT OF TRANSPORTATION

CROSS SECTIONS
S CAMERON LANE

SCALE: 1"=10'H, 5'V | SHEET NO. 1 OF 3 SHEETS | STA. 8+00.00 TO STA. 9+00.00

F.A.P. RTE.	SECTION	COUNTY	TOTAL SHEETS	SHEET NO.
317	45BR-2	PEORIA	122	118
		CONTRACT NO. 68719		

ILLINOIS FED. AID PROJECT

FINAL SURVEY — NOTE BOOK NO. — SURVEYED / PLOTTED / TEMPLATE / AREAS / AREAS CHECKED — BY — DATE

ORIGINAL SURVEY — NOTE BOOK NO. — SURVEYED / PLOTTED / TEMPLATE / AREAS / AREAS CHECKED — BY

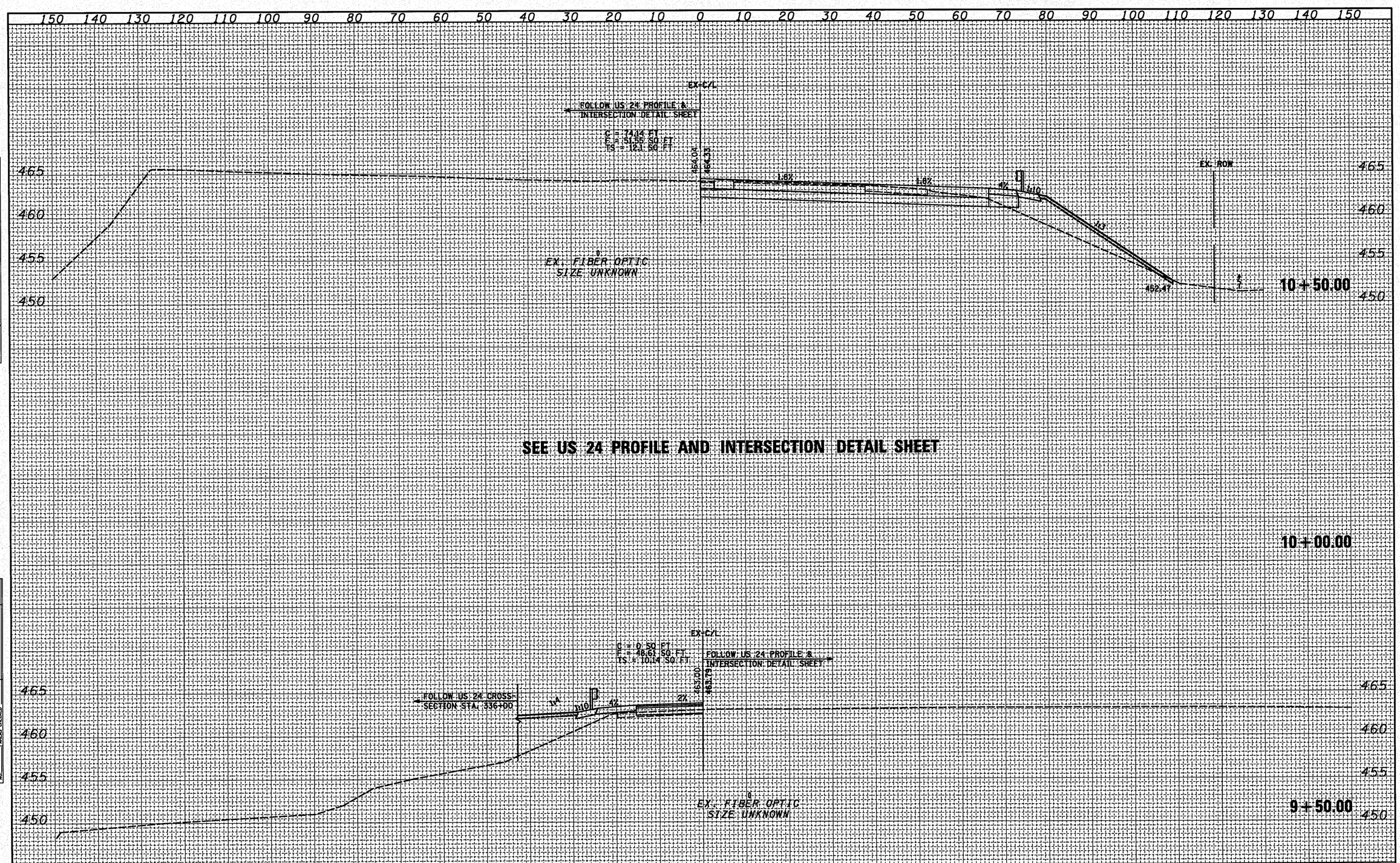

FINAL SURVEY	BY	DATE
SURVEYED		
PLOTTED		
TEMPLATE		
AREAS		
AREAS CHECKED		
NOTE BOOK		
NO.		

ORIGINAL SURVEY	BY	DATE
SURVEYED		
PLOTTED		
TEMPLATE		
AREAS		
AREAS CHECKED		
NOTE BOOK		
NO.		

FILE NAME = ◊FILEL◊	USER NAME = ◊USER◊	DESIGNED - ST	REVISED -
		DRAWN - ST	REVISED -
	PLOT SCALE = ◊SCALE◊	CHECKED - FML	REVISED -
	PLOT DATE = ◊DATE◊	DATE - 10-15-2010	REVISED -

STATE OF ILLINOIS
DEPARTMENT OF TRANSPORTATION

CROSS SECTIONS
S CAMERON LANE

SCALE: 1"=10'H, 5'V | SHEET NO. 2 OF 3 SHEETS | STA. 9+50.00 TO STA. 10+50.00

F.A.P. RTE.	SECTION	COUNTY	TOTAL SHEETS	SHEET NO.
317	45BR-2	PEORIA	122	119
		CONTRACT NO. 68719		
		ILLINOIS FED. AID PROJECT		

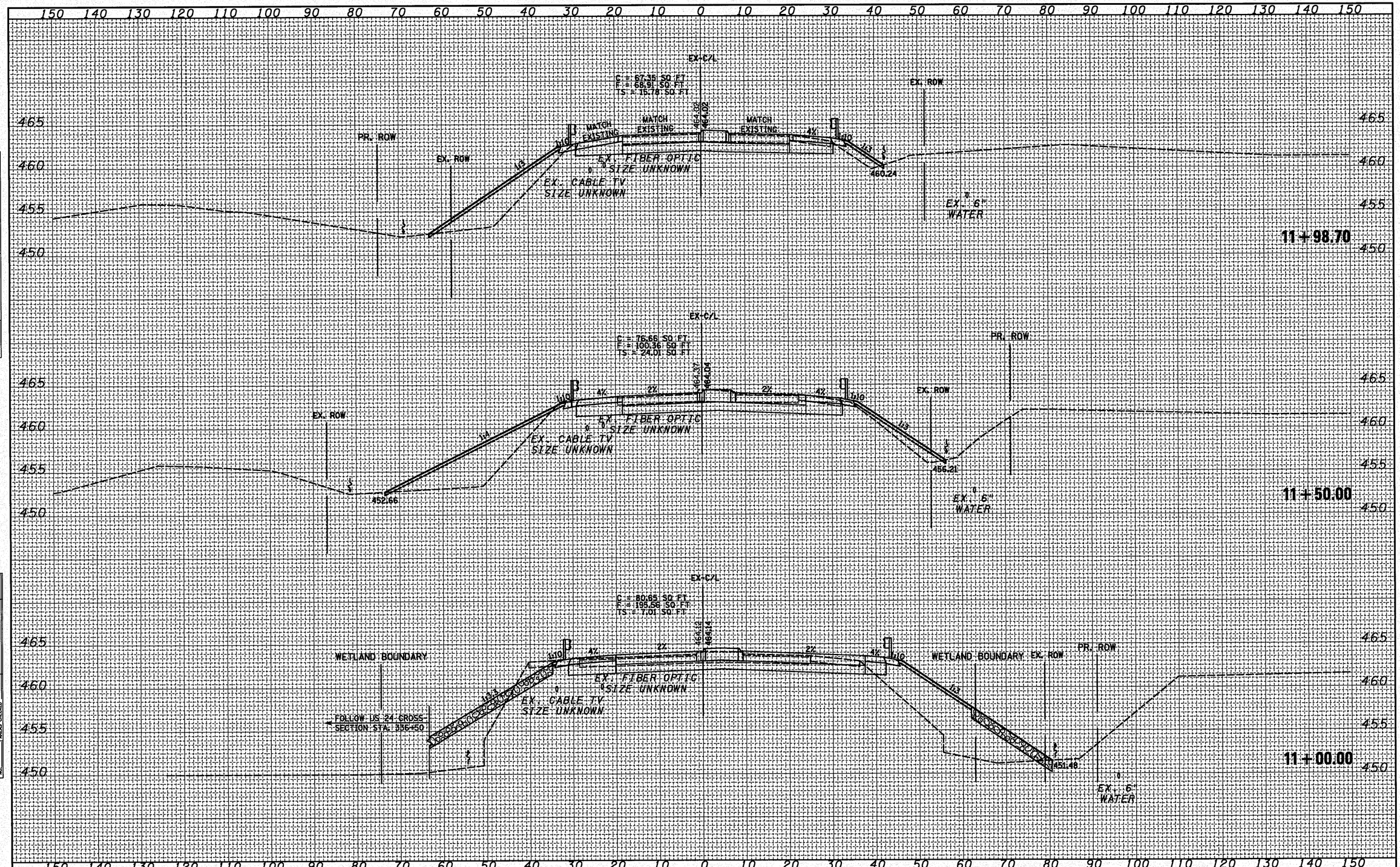

FINAL SURVEY		BY	DATE
NOTE BOOK	SURVEYED		
	PLOTTED		
	TEMPLATE		
	AREAS		
NO.	AREAS CHECKED		

ORIGINAL SURVEY		BY	DATE
NOTE BOOK	SURVEYED		
	PLOTTED		
	TEMPLATE		
	AREAS		
NO.	AREAS CHECKED		

FILE NAME = ©FILEL©	USER NAME = ©USER©	DESIGNED - ST	REVISED -
		DRAWN - ST	REVISED -
	PLOT SCALE = ©SCALE©	CHECKED - FML	REVISED -
	PLOT DATE = ©DATE©	DATE - 10-15-2010	REVISED -

STATE OF ILLINOIS
DEPARTMENT OF TRANSPORTATION

CROSS SECTIONS
S CAMERON LANE

SCALE: 1"=10'H, 5'V | SHEET NO. 3 OF 3 SHEETS | STA. 11+00.00 TO STA. 12+00.00

F.A.P. RTE.	SECTION	COUNTY	TOTAL SHEETS	SHEET NO.
317	45BR-2	PEORIA	122	120
		CONTRACT NO. 68719		
		ILLINOIS FED. AID PROJECT		

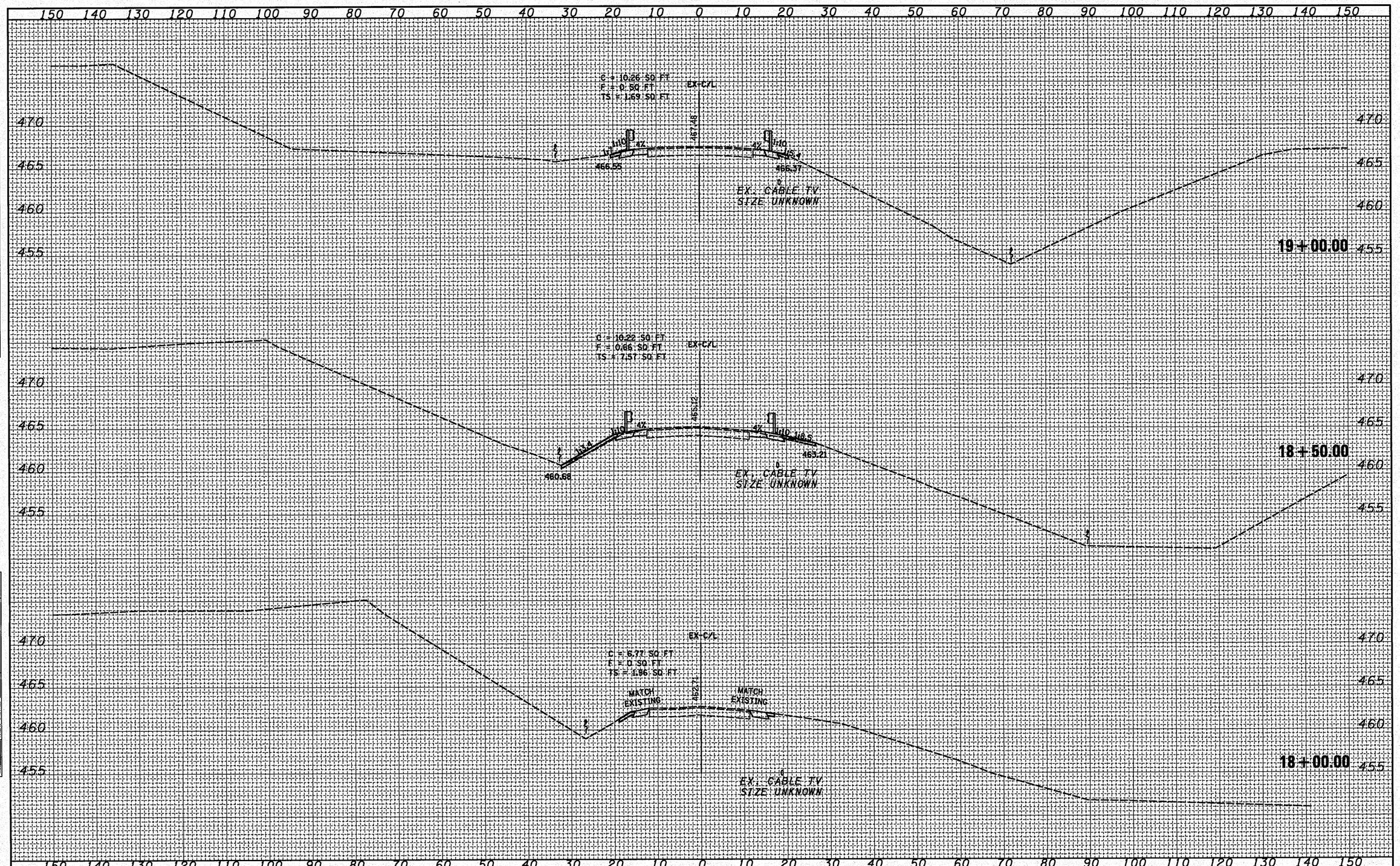

FINAL SURVEY	BY	DATE
SURVEYED		
PLOTTED		
TEMPLATE		
AREAS		
AREAS CHECKED		
NOTE BOOK NO.		

ORIGINAL SURVEY	BY	DATE
SURVEYED		
PLOTTED		
TEMPLATE		
AREAS		
AREAS CHECKED		
NOTE BOOK NO.		

FILE NAME = ©FILEL©	USER NAME = ©USER©	DESIGNED - ST	REVISED -
		DRAWN - ST	REVISED -
	PLOT SCALE = ©SCALE©	CHECKED - FML	REVISED -
	PLOT DATE = ©DATE©	DATE - 10-15-2010	REVISED -

STATE OF ILLINOIS
DEPARTMENT OF TRANSPORTATION

CROSS SECTIONS
WHEELER ROAD

SCALE: 1"=10'H, 5'V | SHEET NO. 1 OF 2 SHEETS | STA. 18+00.00 TO STA. 19+00.00

F.A.P. RTE.	SECTION	COUNTY	TOTAL SHEETS	SHEET NO.
317	45BR-2	PEORIA	122	121

CONTRACT NO. 68719

ILLINOIS FED. AID PROJECT

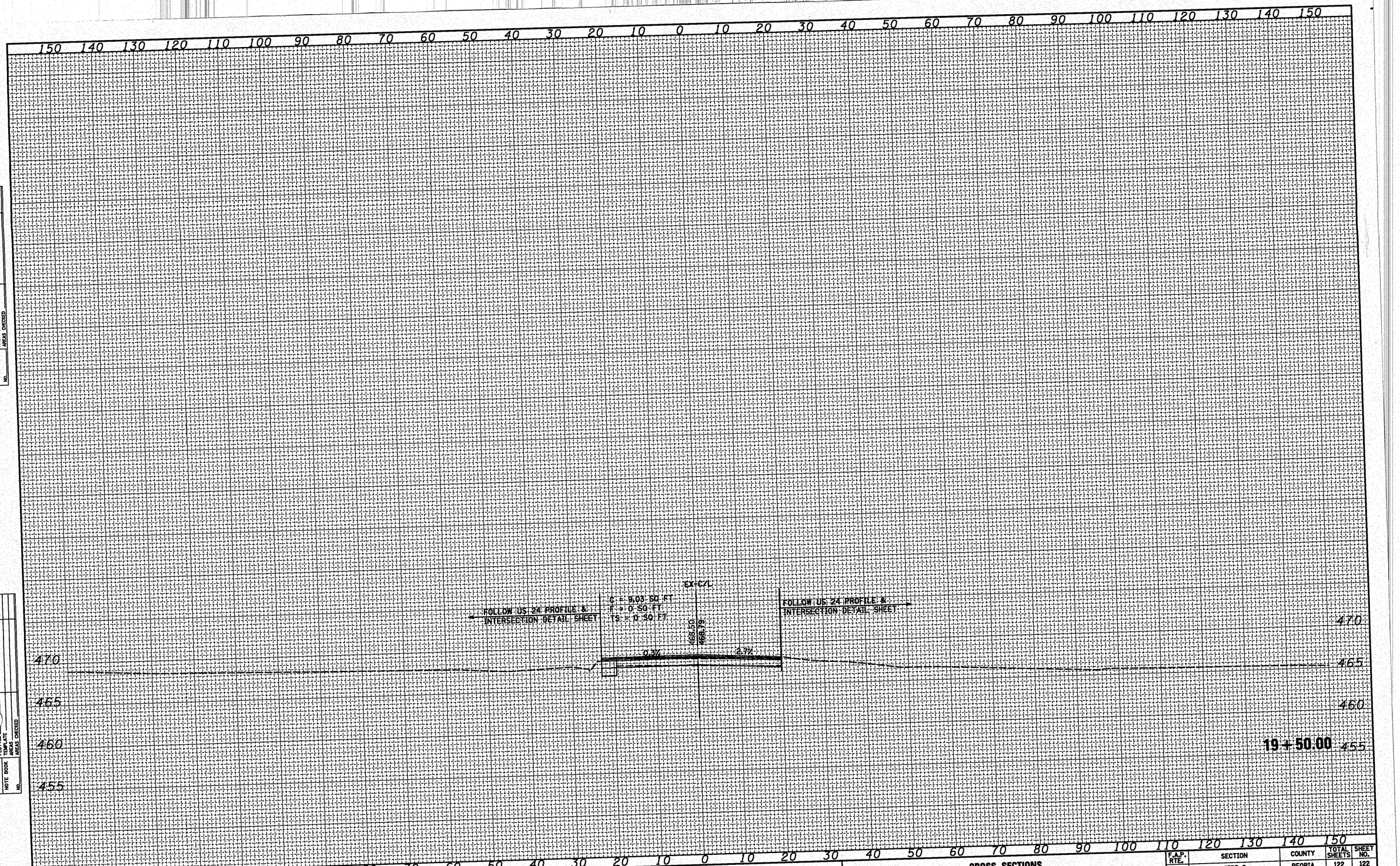

FINAL SURVEY	BY	DATE
SURVEYED		
PLOTTED		
TEMPLATE		
AREAS		
AREAS CHECKED		
NOTE BOOK NO.		

ORIGINAL SURVEY	BY	DATE
SURVEYED		
PLOTTED		
TEMPLATE		
AREAS		
AREAS CHECKED		
NOTE BOOK NO.		

FILE NAME = ◊FILEL◊

USER NAME = ◊USER◊

PLOT SCALE = ◊SCALE◊

PLOT DATE = ◊DATE◊

DESIGNED - ST	REVISED -	
DRAWN - ST	REVISED -	
CHECKED - FML	REVISED -	
DATE - 10-15-2010	REVISED -	

STATE OF ILLINOIS
DEPARTMENT OF TRANSPORTATION

CROSS SECTIONS
WHEELER ROAD

SCALE: 1"=10'H, 5'V | SHEET NO. 2 OF 2 SHEETS | STA. 19+50.00 TO STA. 19+50.00

F.A.P. RTE.	SECTION	COUNTY	TOTAL SHEETS	SHEET NO.
317	45BR-2	PEORIA	122	122
		CONTRACT NO. 68719		
		ILLINOIS FED. AID PROJECT		