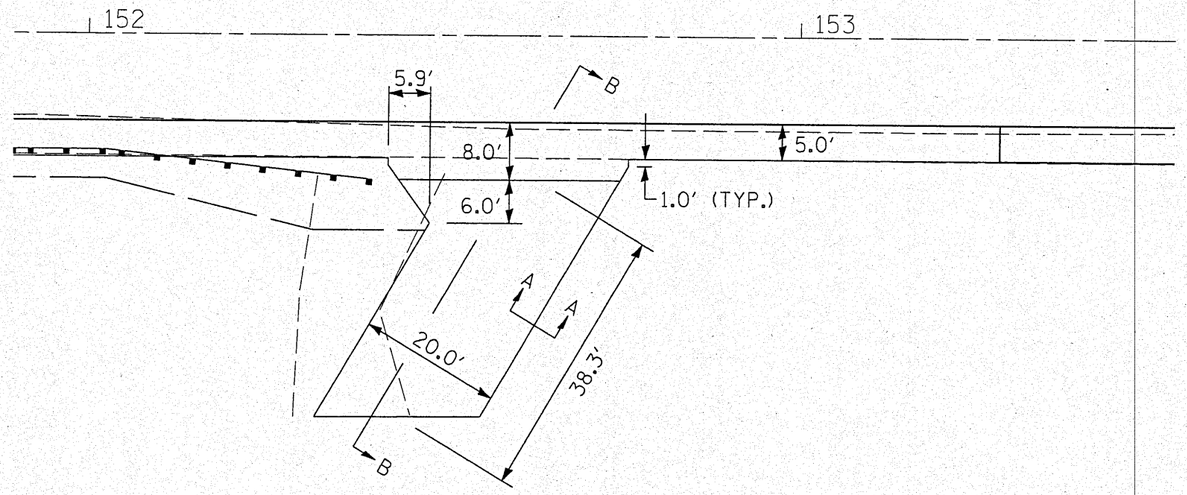

PLAN

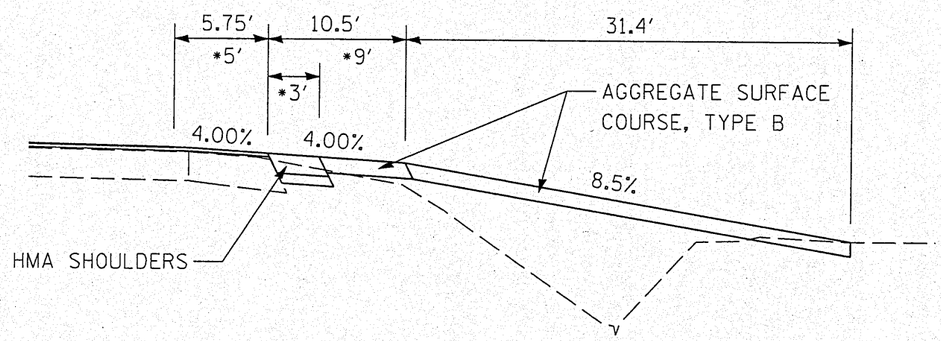

SECTION B-B

* DISTANCES ARE PERPENDICULAR TO CENTERLINE OF IL 164.

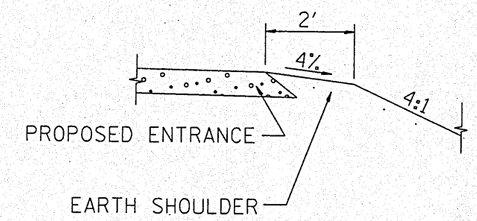

SECTION A-A
SHOULDER TREATMENT FOR RURAL ENTRANCES

GENERAL NOTES

1. ENTRANCES SHALL SLOPE AWAY FROM THE PAVEMENT AT A RATE EQUAL TO THE SHOULDER SLOPE FOR A MINIMUM DISTANCE OF 8'.

2. A TAPER RATE OF 5:1 IS DESIRABLE WHEN TRANSITING FROM THE RURAL ENTRANCE WIDTH TO THE EXISTING ENTRANCE WIDTH.

STATE OF ILLINOIS
DEPARTMENT OF TRANSPORTATION

NOT TO SCALE

ENTRANCE DETAIL

F.A.P. RTE.	SECTION	COUNTY	TOTAL SHEETS	SHEET NO.
657	(116-C)BR-1	HENDERSON	56	40
		CONTRACT NO. 68761		
FED. ROAD DIST. NO.	ILLINOIS	FED. AID PROJECT		