DETAIL FOR I–74 MILLING AND PAVING TRANSITIONS AT 4 1/2" MILLING LOCATION

	STATION	TO	STATION	
I-74 WBDL	778+85.97		779+38.47	DEPARTURE S.N. 057-0121

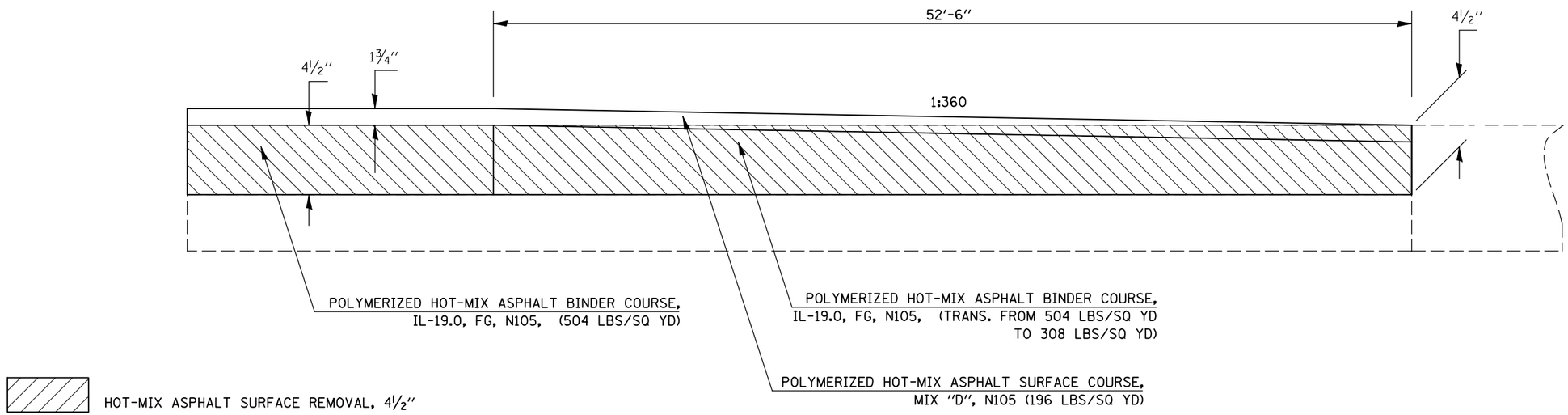

DETAIL FOR I–74 MILLING AND PAVING TRANSITIONS AT 5 1/2" MILLING LOCATIONS

	STATION	TO	STATION	
I-74 WBDL	781+58.39		782+10.89	APPROACH S.N. 057-0121
I-74 WBDL	828+59.25		829+11.75	DEPARTURE PCC PATCH UNDER S.N. 057-0122
I-74 WBDL	837+66.33		838+18.83	APPROACH PCC PATCH UNDER S.N. 057-0122
I-74 WBDL	1037+21.75		1037+74.25	DEPARTURE S.N. 057-0126
I-74 WBDL	1040+25.75		1040+78.25	APPROACH S.N. 057-0126
I-74 WBDL	1110+47.50		1111+00.00	END OF I-74 PROJECT

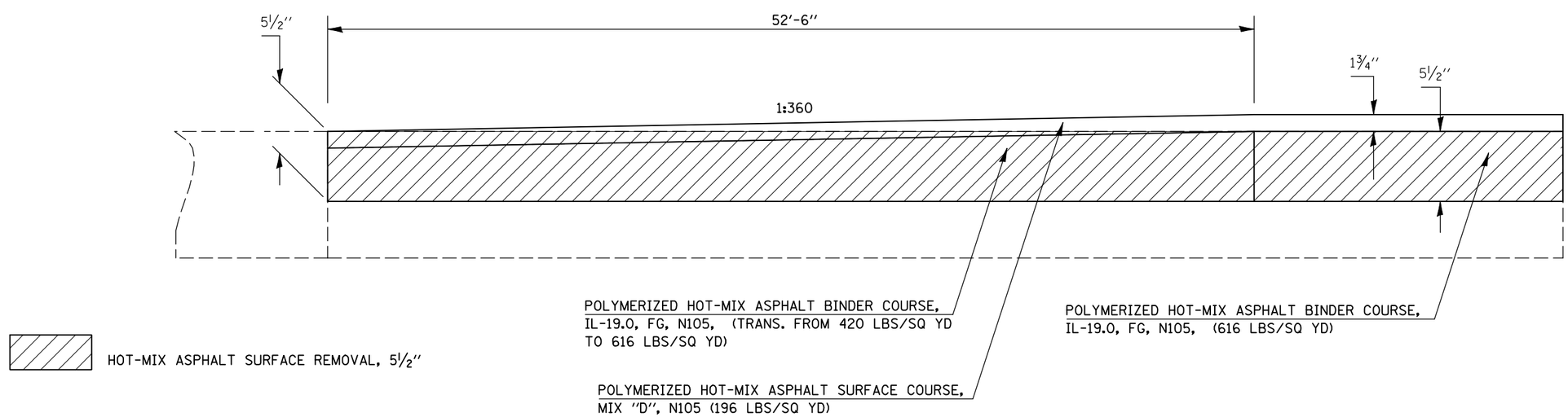

SHEET 3 OF 10

FILE NAME = c:\pw_work\pwidot\hoganbj\d0158340\D570550-sht-details.dgn	USER NAME = hoganbj	DESIGNED - BJH	REVISED -	STATE OF ILLINOIS DEPARTMENT OF TRANSPORTATION	MILLING AND PAVING TRANSITION DETAILS	F.A.I. RTE.	SECTION	COUNTY	TOTAL SHEETS	SHEET NO.
	PLOT SCALE = 40.0000 ' / IN.	DRAWN - BJH 8/30/2010	REVISED -			74	(57-20(1),21,22)RS-3	McLean	150	78
	PLOT DATE = 10/21/2010	CHECKED -	REVISED -			CONTRACT NO. 70550				
		DATE -	REVISED -		SCALE: SHEET NO. 3 OF 10 SHEETS STA. TO STA.	ILLINOIS FED. AID PROJECT				