ROUTE NO.	SEC	COUNTY	TOTAL SHEETS	SHEET NO.
FAU 8173	*	MORGAN	63	37
FED. ROAD DIST. NO. 7	ILLINOIS	PROJECT		

SHEET NO. 9 OF 27 SHEETS

*69-HB)BR

CONTRACT NO. 72837

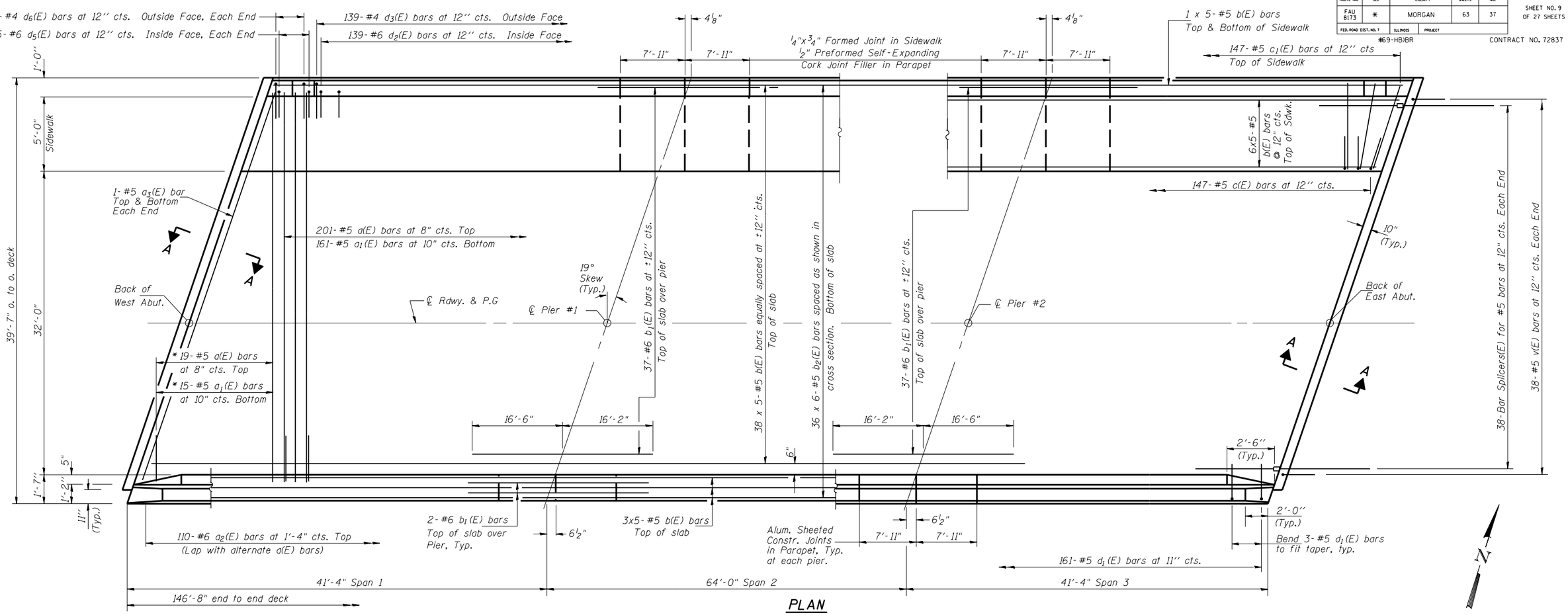

PLAN

* Order a(E) & a_1(E) bars full length. Cut to fit skew and use remainder of bars in opposite end.

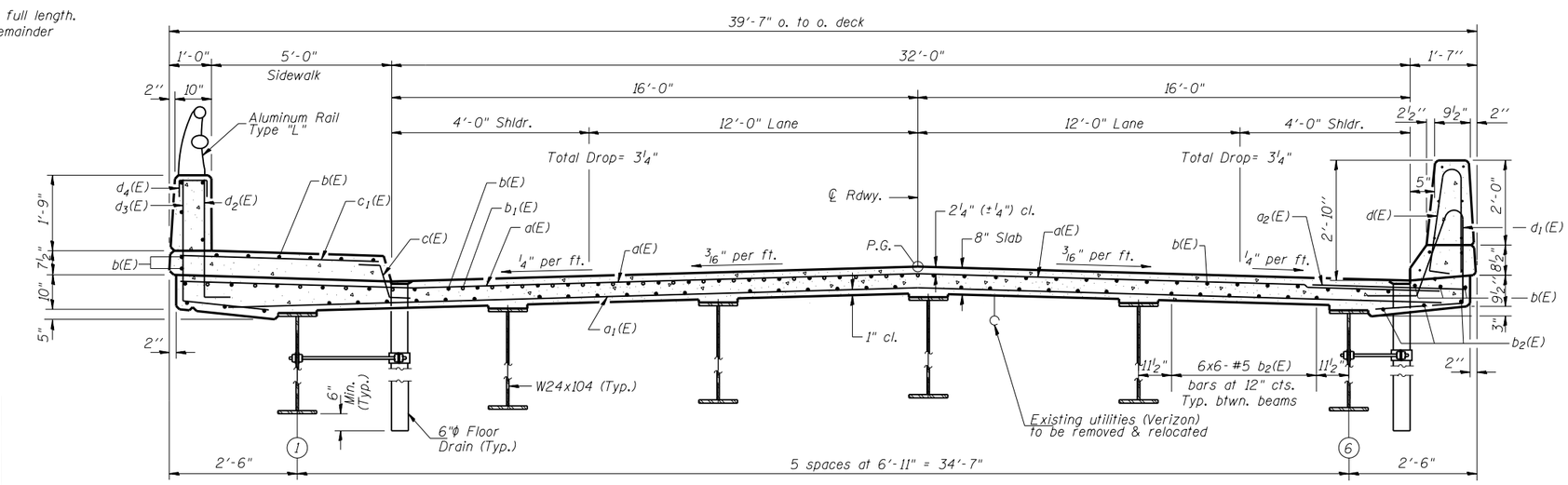

CROSS SECTION

(Looking East)

Notes: See sheet #1 of 27 for Floor Drain spacing.
See sheet #10 of 27 for Superstructure Details and Bill of Material.
See sheet #11 of 27 for Parapet Reinforcement.
See sheet #12 of 27 for Section A-A at Abutments
See sheet #21 of 27 for Bar Splicer Details.
Bars indicated thus 20 x 3-#5 etc. indicates 20 lines of bars with 3 lengths per line.
See sheet #13 of 27 for Rail Details.

MIN. BAR LAP

#5 bar = 1'-8"

DESIGNED	BAN
CHECKED	JOH
DRAWN	TC
CHECKED	BAN

SUPERSTRUCTURE
MOUND ROAD (FAU ROUTE 8173)
OVER ILLINOIS ROUTE 104
SECTION (69-HB)BR
MORGAN COUNTY
STATION 100+00.00
STRUCTURE NO. 069-0521

HU CHISON ENGINEERING, INC.
JACKSONVILLE, ILLINOIS
Date: 12/21/07

2280-2b109