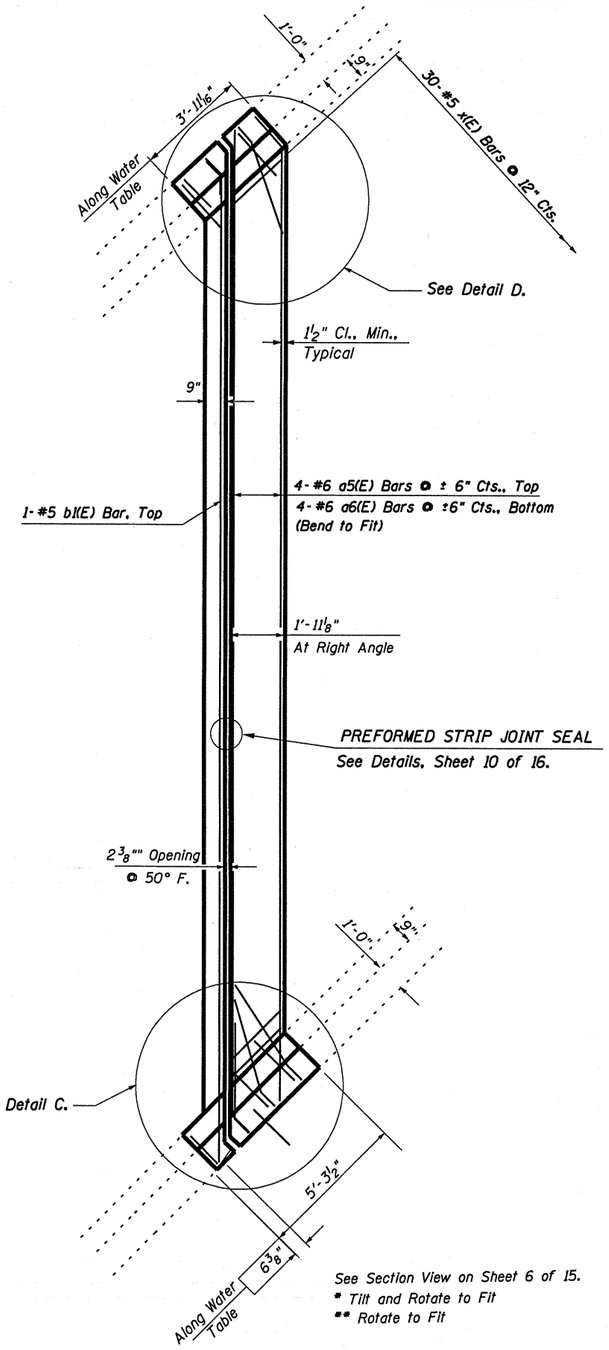

See Section View on Sheet 6 of 15.
* Tilt and Rotate to Fit
** Rotate to Fit

PLAN

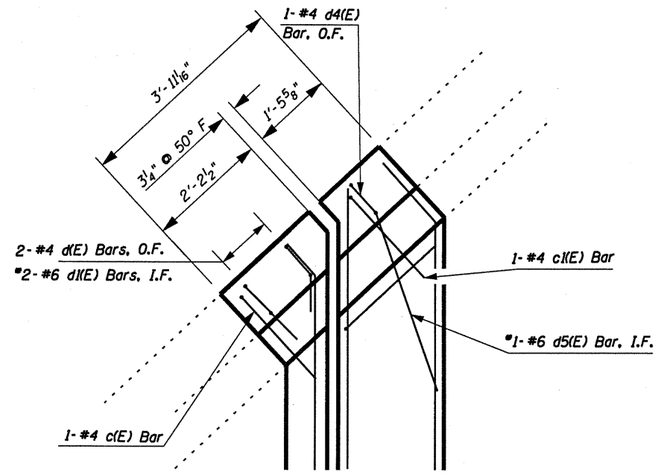

DETAIL D

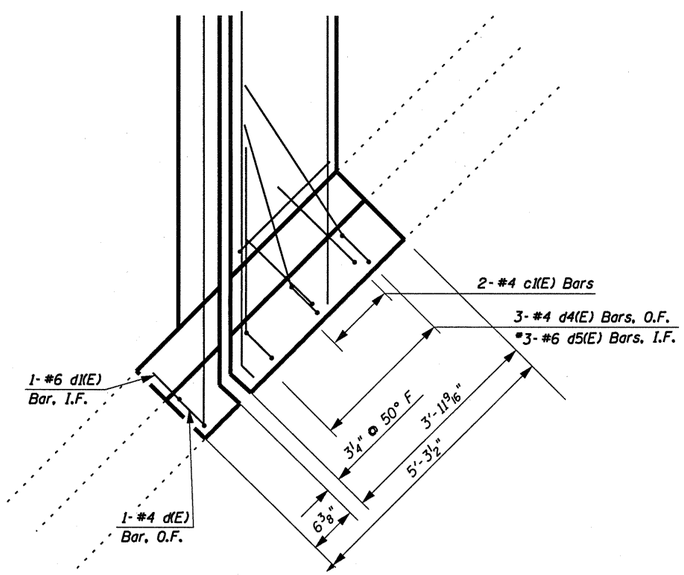

DETAIL C

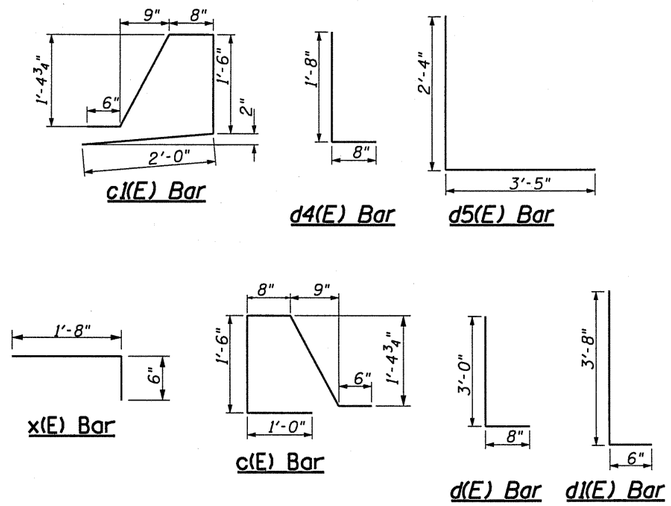

STRUCTURE NO. 041-0061
EAST JOINT REPLACEMENT
BILL OF MATERIAL

Bar	No.	Size	Length	Shape
a5(E)	4	#6	46'-8"	
a6(E)	4	#6	43'-5"	
b1(E)	1	#5	46'-8"	
c(E)	1	#4	5'-9"	
c1(E)	3	#4	6'-3"	
d(E)	3	#4	3'-8"	
d1(E)	3	#6	4'-2"	
d4(E)	4	#4	2'-4"	
d5(E)	4	#6	5'-9"	
u(E)	4	#4	2'-2"	
x(E)	30	#5	2'-2"	
Preformed Joint Strip Seal			Foot	44.5
Concrete Removal			Cu. Yd.	5.7
Concrete Superstructure			Cu. Yd.	6.3
Reinforcement Bars, Epoxy Coated			Pound	750

Reinforcement bars designated (E) shall be epoxy coated.

Bars indicated thus 1 x 2-#5 etc. indicates 1 line of bars with 2 lengths per line.

EAST ABUT.
CONCRETE REPLACEMENT DETAILS
JEFFERSON COUNTY
STRUCTURE NO. 041-0061

FILE NAME = c:\pw_work\pwidot\gautneyrk\d0190470\78212-sht-plan.dgn	USER NAME = gautneyrk	DESIGNED -RKG	REVISED - ---
		DRAWN -RKG	REVISED - ---
	PLOT SCALE = 5:0:74 1/4 ':' / IN.	CHECKED -MAS	REVISED - ---
	PLOT DATE = 11/9/2010	DATE -10/27/10	REVISED - ---

STATE OF ILLINOIS
DEPARTMENT OF TRANSPORTATION

SCALE: _____ SHEET NO. __ OF ___ SHEETS STA. _____ TO STA. _____

RTE.	SECTION	COUNTY	TOTAL SHEETS	SHEET NO.
57	D9 CM BRIDGE REPAIR 2011-1	JEFFERSON	15	8
		CONTRACT NO. 78212		

FED. ROAD DIST. NO. _ ILLINOIS FED. AID PROJECT