INLET BOX, SPECIAL, No.1

F.A. RTE.	SECTION	COUNTY	TOTAL SHEETS	SHEET NO.
	06-00543-00-BT	WINNEBAGO	148	147
FED. ROAD DIST. NO.		ILLINOIS	CONTRACT NO.	85521

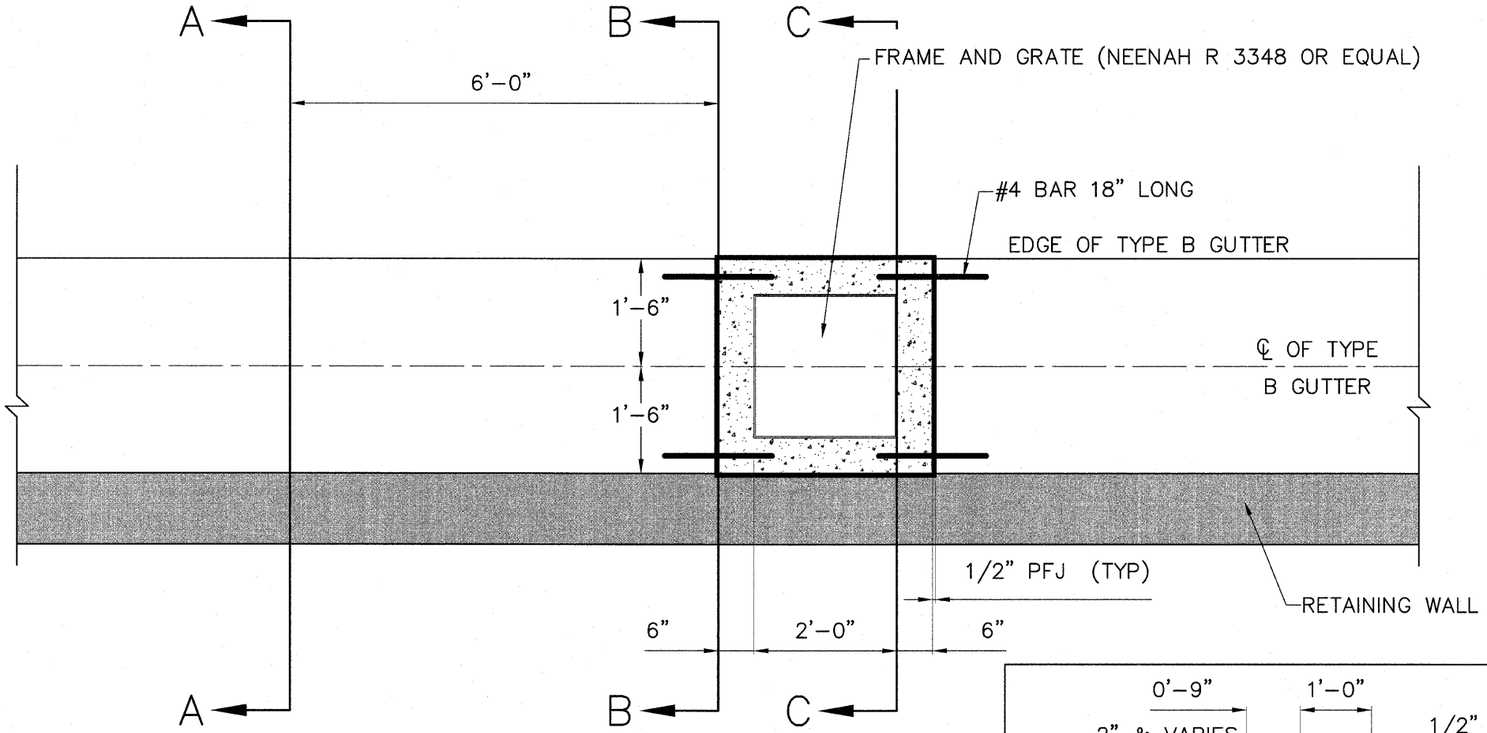

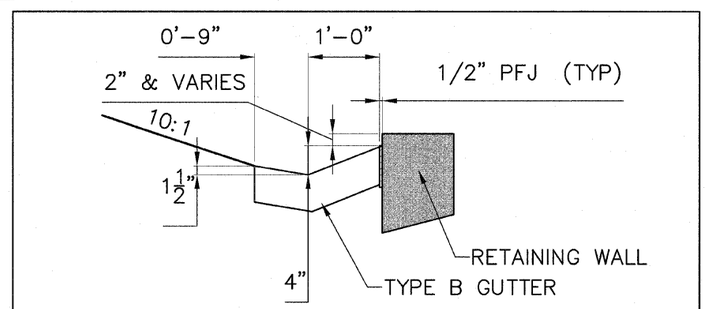

SECTION A-A

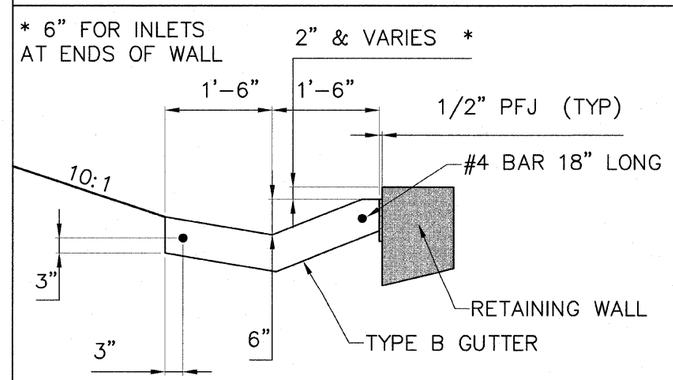

SECTION B-B

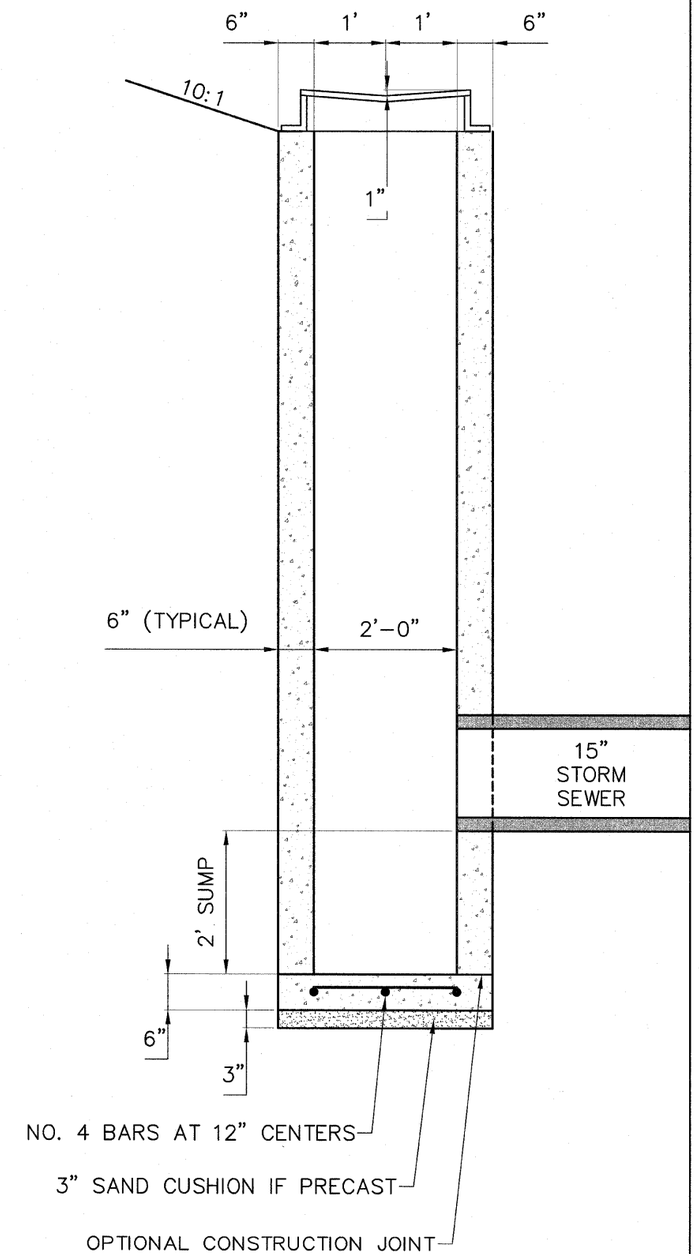

SECTION C-C

NOTES:

1. EXCEPT AS NOTED HERON INLET BOX. SPECIAL SHALL BE CONSTRUCTED IN ACCORDANCE WITH SECTION 602 OF THE STANDARD SPECIFICATIONS.
2. THE CONTRACT UNIT PRICE "EACH" FOR INLETS, SPECIAL SHALL INCLUDE THE COST OF CONSTRUCTING THE INLET BOX, FURNISHING AND INSTALLING THE FRAME AND GRATE, THE PRECAST FLOOR SLAB, PCC COLLAR, WELDED WIRE FABRIC, SAND CUSHION (WHEN USED) AND REINFORCEMENT BARS.
3. CLASS SI CONCRETE OR PRECAST CONCRETE SHALL BE USED THROUGHOUT. PRECAST CONCRETE SHALL BE IN ACCORDANCE WITH SECTION 504.01 THRU 504.05 OF THE STANDARD SPECIFICATIONS EXCEPT THAT CONCRETE STRENGTH SHALL BE
4. 4,000 PSI AFTER 28 DAYS.
5. REINFORCEMENT BARS SHALL CONFORM TO A.S.T.M. A-53 (TYPE E OR S) GRADE B, SCHEDULE 40, AND SHALL BE GALVANIZED CONFORMING TO A.S.T.M. A-120.
6. THE SIDE WALLS MAY BE BUILT AS PRECAST SEGMENTED SECTIONS.
7. ALL VOIDS AROUND PIPE ENTRANCE, BOTH INSIDE AND OUTSIDE, SHALL BE SEALED WITH MORTAR.

SHEET REVIEW	
AGENCY	DATE

REVISIONS		
NO.	ITEM	DATE

SCALE:	NA
DRAWN BY:	MS
CHECKED BY:	JWH
DATE:	AUGUST 13, 2010

McClure Engineering Associates, Inc.
7282 Argus Drive Rockford, Illinois 61107-5837
(815) 398-2332 FAX (815) 398-2496
Design Firm License: Illinois 184-000816

Copyright 2010 By McClure Engineering Associates, Inc.

INLET BOX SPECIAL
RIVERWALK MUSEUM CAMPUS
711 NORTH MAIN STREET ROCKFORD, IL
FILE:H:\08-008 RIVERWALK MUSEUM\DESIGN\DRAWINGS\08-008 GUTTER INLET DETAIL.DWG JOB:04-28-10-008

SHEET NO. 147 OF 148

H:\08-008 RIVERWALK MUSEUM\DESIGN\DRAWINGS\08-008 GUTTER INLET DETAIL.DWG, INLET BOX SPECIAL, 11/1/2010 3:55:30 PM, EI, JWH