Existing Structure: Structure Number 101-3018 consists of a four-span, riveted, steel plate girder bridge built in 1950. The existing structure is 462'-0" long and 29'-6" wide. The substructure consists of spill-through concrete abutments and reinforced concrete wall-type piers with footings founded on timber piles. The existing structure shall be completely removed, unless noted otherwise. Kishwaukee Road will be closed during construction.

Salvage: Existing Name Plate to be salvaged and delivered to Winnebago Coounty Highway Dept.

Bench Marks: Railroad spike in power pole Station 83+78.50, 75.30 ft. Rt., Elev. 687.86

LOADING HS25

Allow 50 #/sq. ft. for future wearing surface.

DESIGN SPECIFICATIONS

2002 AASHTO Standard Specifications for Highway Bridges

1999 AASHTO Guide for the Development of Bicycle Facilities

DESIGN STRESSES

FIELD UNITS

f'c = 3,500 psi
fy = 60,000 psi (reinforcement)
fy = 50,000 psi (AASHTO M270 Gr. 50)

SEISMIC DATA

Seismic Performance Category (SPC) = A
Bedrock Acceleration Coefficient (A) = 0.035g
Site Coefficient (S) = 1.0

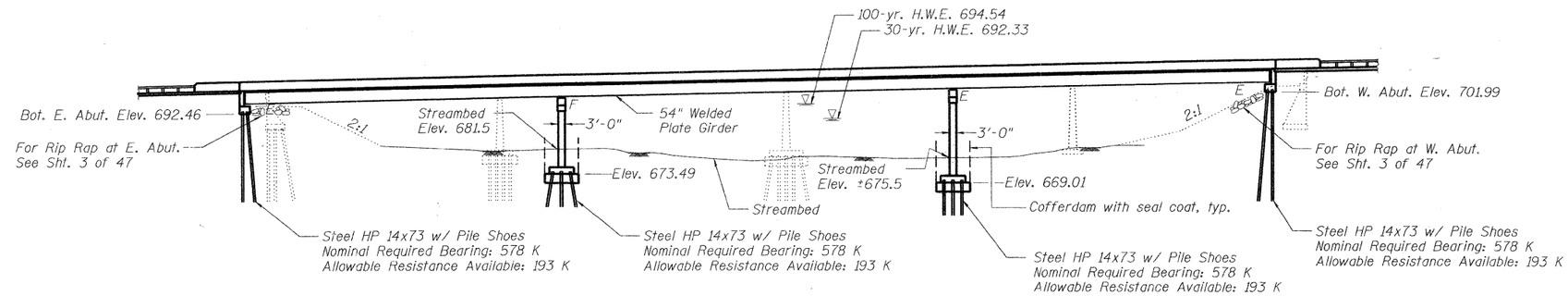

ELEVATION

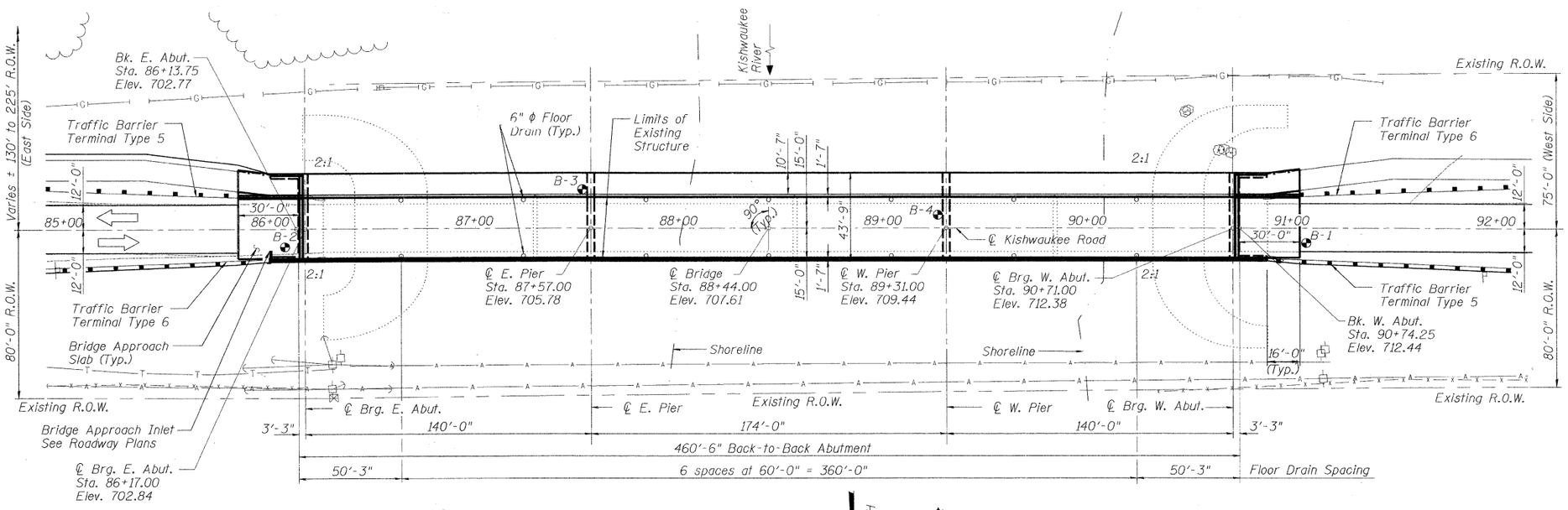

PLAN

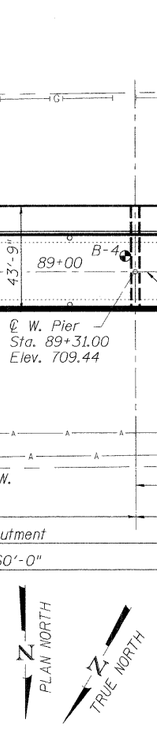

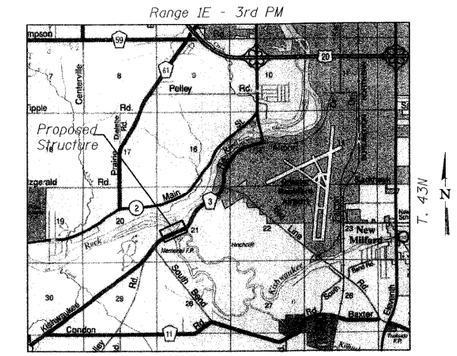

LOCATION SKETCH

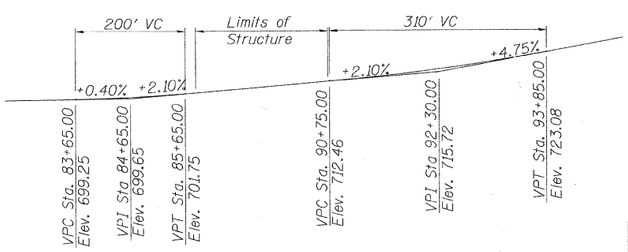

PROFILE GRADE

KISHWAUKEE ROAD

WATERWAY INFORMATION

Drainage Area = 1257 sq. mi. Low Grade Elev. 699.21 ft. @ Sta. 83+50

Flood	Freq. Yr.	Q C.F.S.	Opening Sq. Ft. Exist.	Opening Sq. Ft. Prop.	Nat. H.W.E.	Head-Ft. Exist.	Head-Ft. Prop.	Headwater El. Exist.	Headwater El. Prop.
Design	30	24,200	4895	5023	692.33	-0.10	-0.14	692.23	692.19
Base	100	32,100	5700	5916	694.54	-0.16	-0.23	694.38	694.31

DESIGN SCOUR ELEVATION TABLE

	E. Abut.	E. Pier	W. Pier	W. Abut.
Design Scour Elev. (ft)	692.5	670.5	664.0	702.0

"I certify that to the best of my knowledge, information and belief, this bridge design is structurally adequate for the design loading shown on the plans. The design is an economical one for the style of structure and complies with requirements of the current 'AASHTO Standard Specifications for Highway Bridges.'"

LICENSED STRUCTURAL ENGINEER
STUART M. KEMP
081-00-4897
STATE OF ILLINOIS

Stuart M. Kemp
SIGNATURE
10/26/10
DATE
LIC. EXP. DATE: 11/30/10

GENERAL PLAN & ELEVATION
STRUCTURE NUMBER 101-3100

PROFESSIONAL DESIGN FIRM LICENSE #184-001084

© Copyright Hanson Professional Services Inc. 2010

HANSON
Hanson Professional Services Inc.

JOB NO. 03R1807
DATE 10/26/10

SHEET NO. 1
47 SHEETS

F.A.U. RTE.	SECTION	COUNTY	TOTAL SHEETS	SHEET NO.
5103	03-00337-00-BR	Winnebago	66	16

CONTRACT NO. 85523

ILLINOIS FED. AID PROJECT

LAYOUT	A.R.F./S.M.K.	08/23/10
DRAWN	M.G.M.	10/25/10
REVIEWED	A.R.F./S.M.K.	10/26/10

10/27/2010
I:\03Jobs\03R807\StructSheets\S-03X-GPNE.dgn