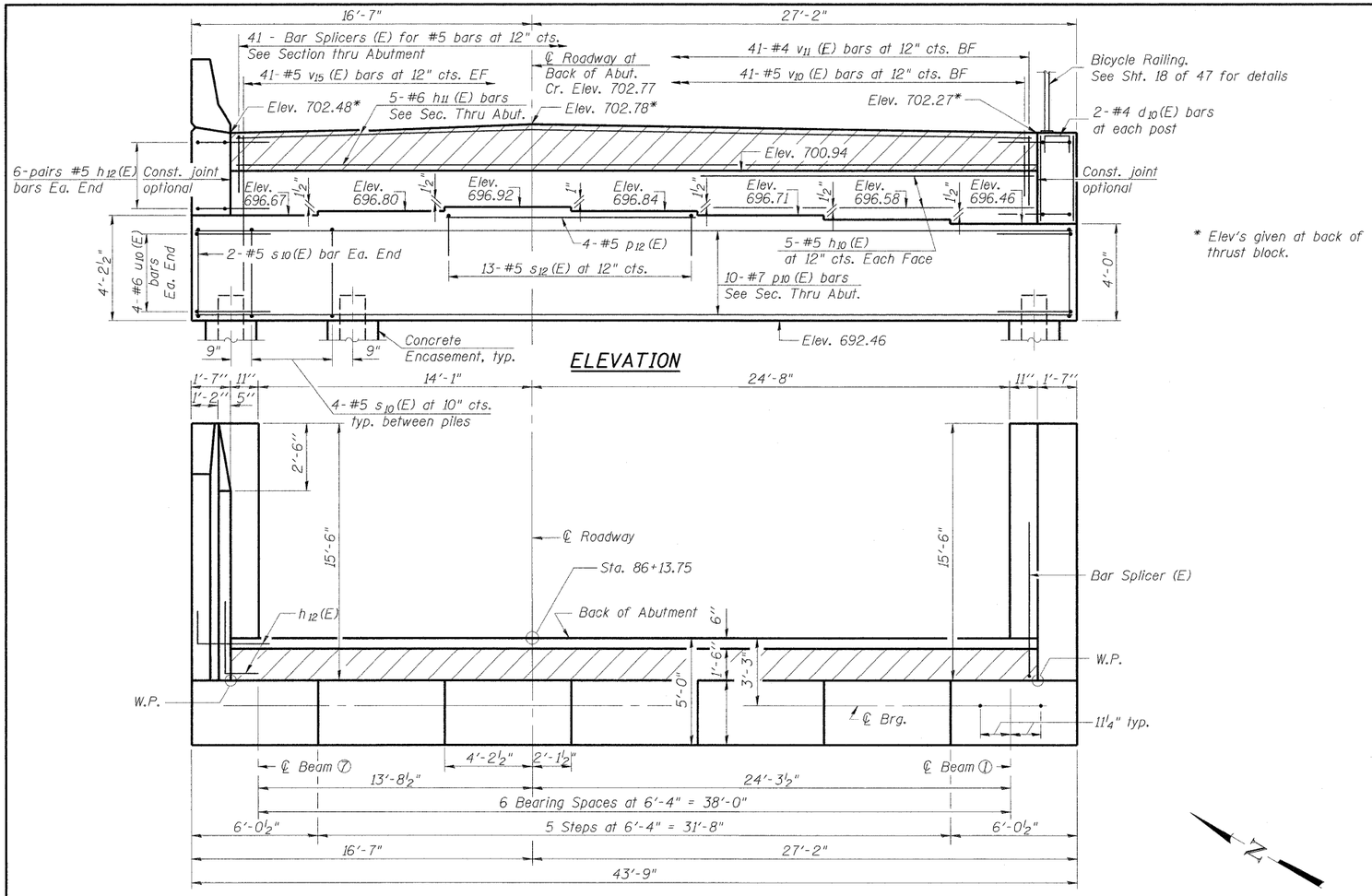

ELEVATION

TOP VIEW

PLAN-PILE CAP

* Elev's given at back of thrust block.

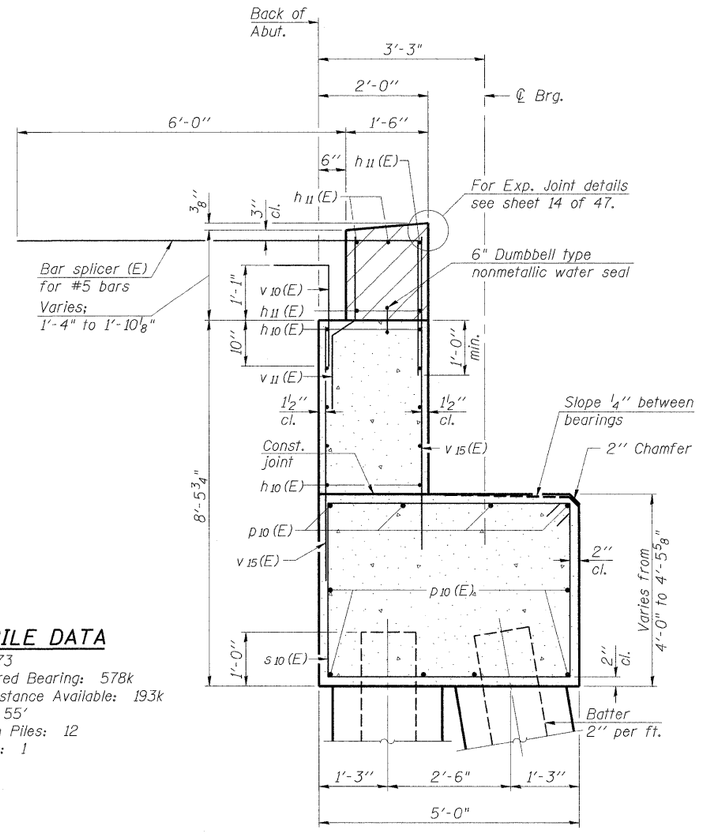

SEC. THRU ABUT.

PILE DATA

Type: HP14x73
Nominal Required Bearing: 578k
Factored Resistance Available: 193k
Est. Length: 55'
No. Production Piles: 12
No. Test Piles: 1

Notes:
Hatched area to be poured after superstructure falsework has been removed. Quantity of concrete included with Concrete Superstructure.
Space reinforcement in cap to miss anchor bolts.
Pour steps monolithically with cap.

EAST ABUTMENT
STRUCTURE NUMBER 101-3100

PROFESSIONAL DESIGN FIRM LICENSE #184-001084

© Copyright Hanson Professional Services Inc. 2010

HANSON
Hanson Professional Services Inc.

JOB NO.	SHEET NO. 25	F.A.U. RTE.	SECTION	COUNTY	TOTAL SHEETS	SHEET NO.
03R1807		5103	03-00337-00-BR	Winnebago	66	40
DATE 10/26/10	47 SHEETS			CONTRACT NO. 85523		
			ILLINOIS	FED. AID PROJECT		

LAYOUT	JKR/SMK	08/23/10
DRAWN	MGM	10/25/10
REVIEWED	JKR/SMK	10/26/10

10-26-2010
I:\03Jobs\03R1807\Struct\Sheet\S-025-E-Abut.dgn