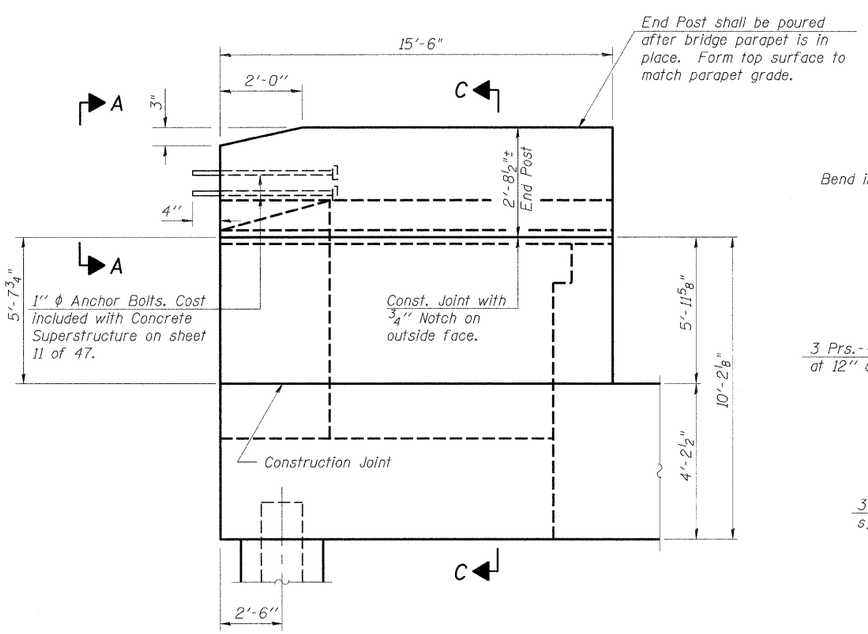

NORTH WING WALL ELEVATION
Showing Dimensions

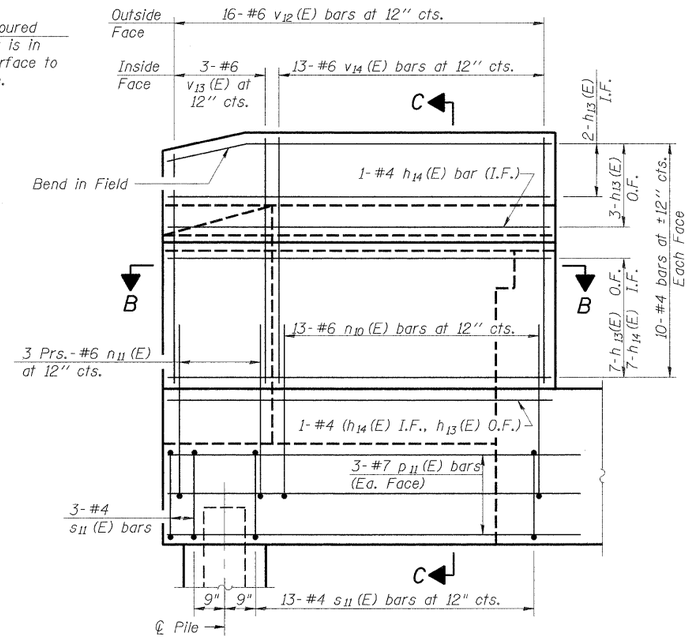

NORTH WING WALL ELEVATION
Showing Reinforcement

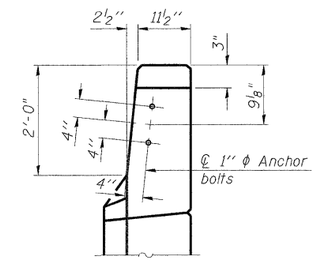

VIEW A-A

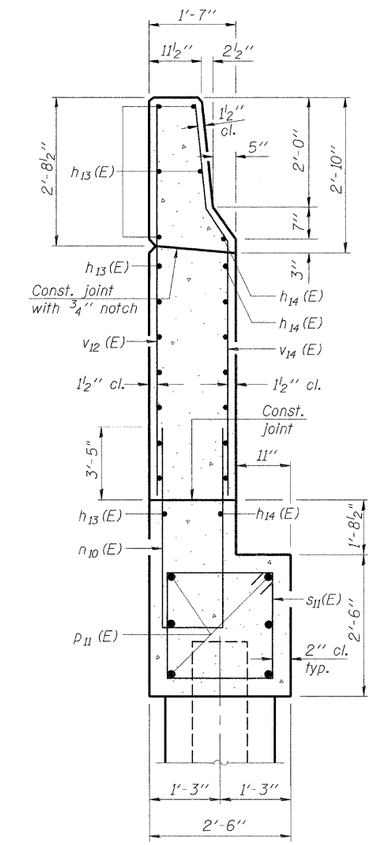

SECTION C-C

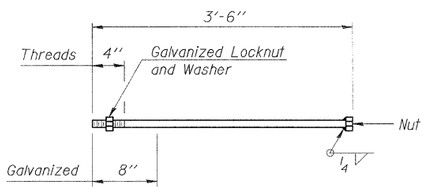

1" ϕ ANCHOR BOLT

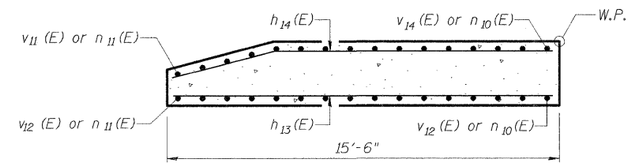

SECTION B-B

Notes:
Hatched area to be poured after superstructure false work has been removed. Quantity of concrete included with Concrete Superstructure.
Space reinforcement in cap to miss anchor bolts.
Pour steps monolithically with cap.
Quantity of concrete in end post included with Concrete Superstructure on sheet 11 of 47.
For Concrete Encasement details, see sheet 34 of 47.

EAST ABUTMENT
STRUCTURE NUMBER 101-3100

PROFESSIONAL DESIGN FIRM LICENSE #184-001084

© Copyright Hanson Professional Services Inc. 2010

HANSON
Hanson Professional Services Inc.

JOB NO.	SHEET NO. 26	F.A.U. RTE.	SECTION	COUNTY	TOTAL SHEETS	SHEET NO.
03R1807	47 SHEETS	5103	03-00337-00-BR	Winnebago	66	41
DATE 10/26/10				CONTRACT NO. 85523		
				ILLINOIS FED. AID PROJECT		

LAYOUT	JKR/SMK	08/23/10
DRAWN	MGM	10/25/10
REVIEWED	JKR/SMK	10/26/10

ID:GB-3200
I:\03166\03R1807\Struct\Sheet-S-0201-E-Abut-Hdgn