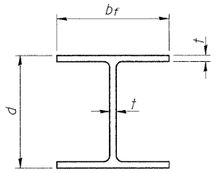

STEEL PILE TABLE

Designation	Depth d	Flange width b_f	Web and Flange thickness t	Encasement diameter A
HP 14x117	14 1/4"	14 7/8"	13/16"	30"
x102	14"	14 3/4"	11/16"	30"
x89	13 7/8"	14 3/4"	5/8"	30"
x73	13 5/8"	14 5/8"	1/2"	30"
HP 12x84	12 1/4"	12 1/4"	11/16"	24"
x74	12 1/8"	12 1/4"	5/8"	24"
x63	12"	12 1/8"	1/2"	24"
x53	11 3/4"	12"	7/16"	24"
HP 10x57	10"	10 1/4"	9/16"	24"
x42	9 3/4"	10 1/8"	7/16"	24"
HP 8x36	8"	8 1/8"	7/16"	18"

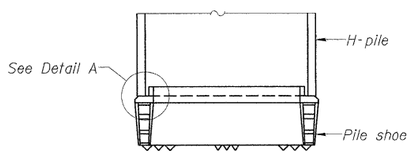

ELEVATION

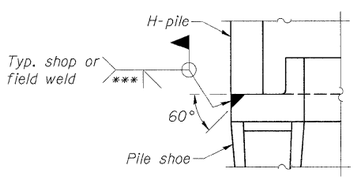

DETAIL A

H-PILE SHOE ATTACHMENT

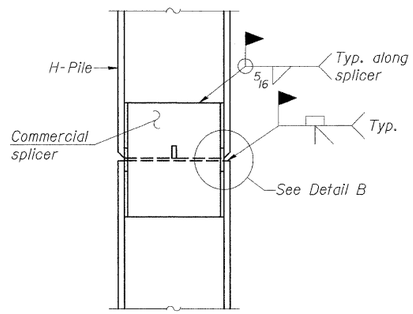

ELEVATION

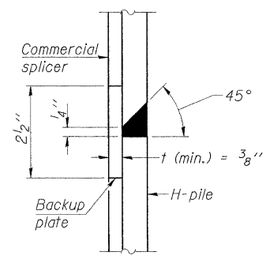

DETAIL "B"

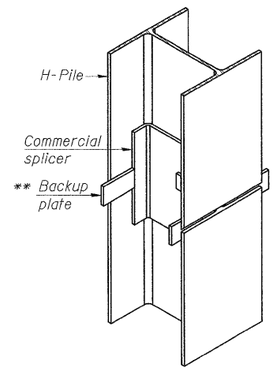

ISOMETRIC VIEW

WELDED COMMERCIAL SPLICE

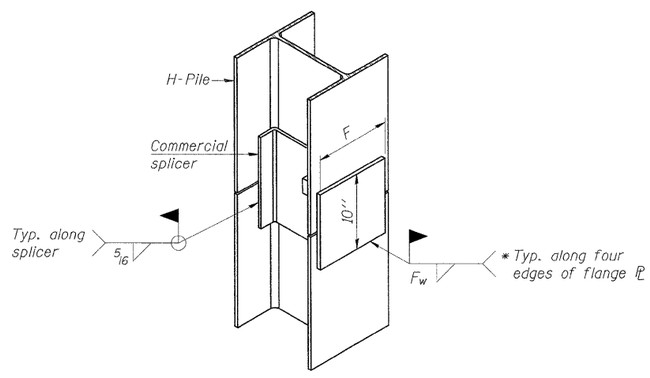

ISOMETRIC VIEW

WELDED COMMERCIAL SPLICE ALTERNATE

* Interrupt welds 1/4" from end of web and/or each flange.

** Remove portions of backup plates that extend outside the flanges.

*** Weld size per pile shoe manufacturer (5/16" min.).

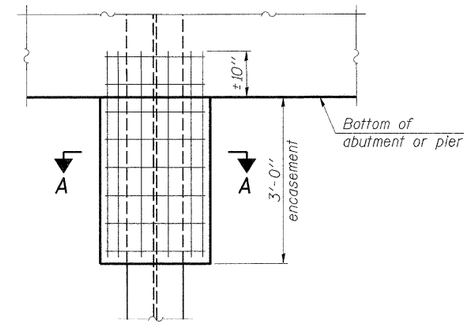

ELEVATION

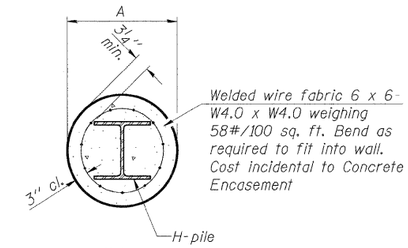

Note:
Forms for encasement may be omitted when soil conditions permit.

SECTION A-A

PILE ENCASEMENT

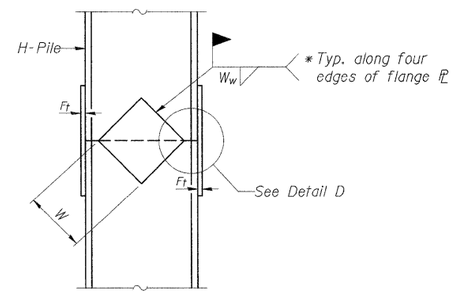

ELEVATION

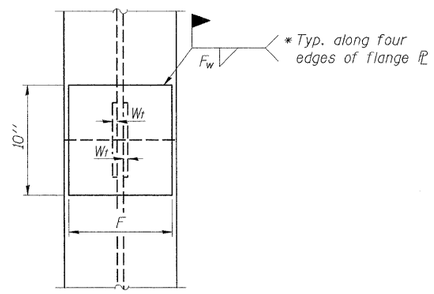

END VIEW

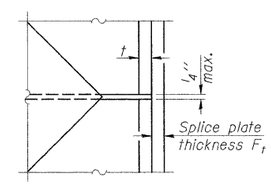

DETAIL D

Designation	F	F_t	F_w	W	W_t	W_w
HP 14x117	12 1/2"	1"	7/8"	7 3/4"	5/8"	1/2"
x102	12 1/2"	7/8"	3/4"	7 3/4"	5/8"	1/2"
x89	12 1/2"	3/4"	11/16"	7 3/4"	5/8"	1/2"
x73	12 1/2"	5/8"	9/16"	7 3/4"	5/8"	1/2"
HP 12x84	10"	7/8"	11/16"	6 1/2"	5/8"	1/2"
x74	10"	7/8"	11/16"	6 1/2"	5/8"	1/2"
x63	10"	5/8"	1/2"	6 1/2"	1/2"	3/8"
x53	10"	5/8"	1/2"	6 1/2"	1/2"	3/8"
HP 10x57	8"	3/4"	9/16"	5 1/4"	1/2"	3/8"
x42	8"	5/8"	9/16"	5 1/4"	1/2"	3/8"
HP 8x36	7"	5/8"	7/16"	4 1/4"	1/2"	3/8"

WELDED PLATE FIELD SPLICE

Note:
The steel H-piles shall be according to AASHTO M270 Grade 50.

PROFESSIONAL DESIGN FIRM LICENSE #184-001084

© Copyright Hanson Professional Services Inc. 2010

HANSON
Hanson Professional Services Inc.

JOB NO. 03R1807
DATE 10/26/10
SHEET NO. 34
47 SHEETS

F.A.U. RTE.	SECTION	COUNTY	TOTAL SHEETS	SHEET NO.
5103	03-00337-00-BR	Winnebago	66	49

CONTRACT NO. 85523
ILLINOIS FED. AID PROJECT

HP PILE DETAILS
STRUCTURE NUMBER 101-3100

LAYOUT	JKR/SMK	08/23/10
DRAWN	MDM	10/25/10
REVIEWED	JKR/SMK	10/26/10

10.26.2010
N:\03Jobs\03R1807\Structure\S-034-HP-Pile.dgn