DETAIL D

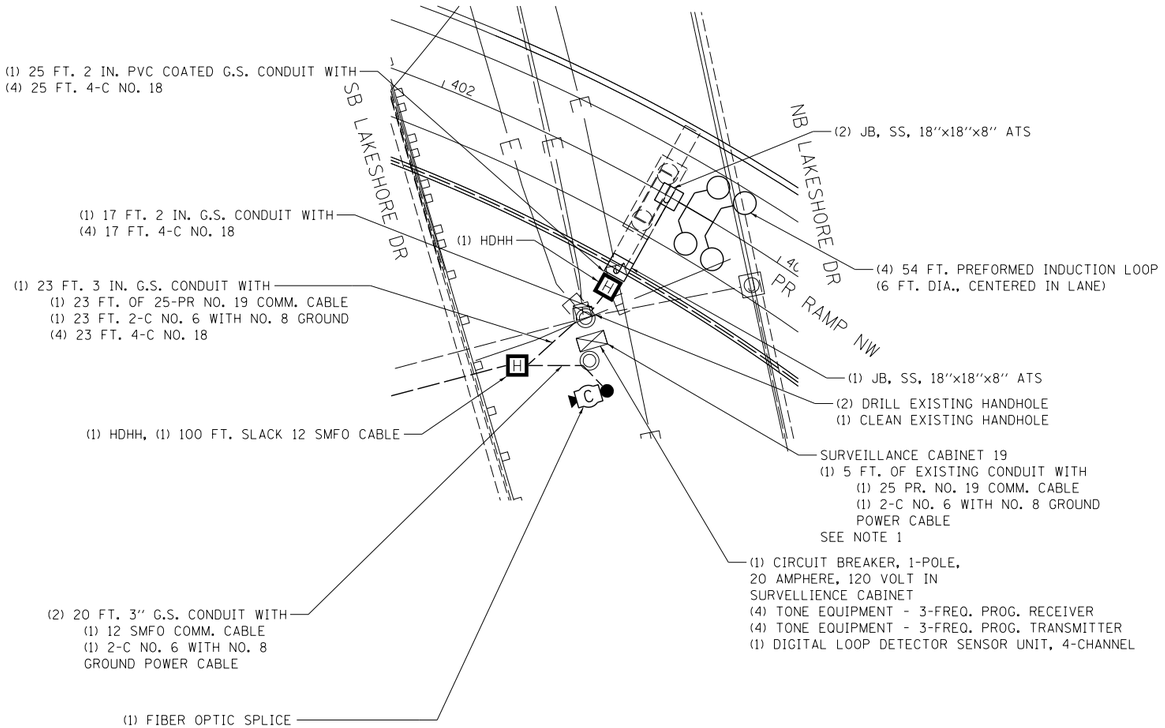

NOTES

1. SPLICE PROPOSED 25 PR. NO. 19 CABLE WITH EXISTING 25 PR. NO. 19 LAKE SHORE DR. TRUNK CABLE IN EXISTING SURVEILLANCE CABINET 19.
2. CONTRACTOR SHALL FULLY INTEGRATE ALL CCTV EQUIPMENT TO BE INSTALLED WITH THE EXISTING VIDEO DISTRIBUTION SYSTEM.
3. SEE CONDUIT ATTACHED TO PIER INSTALLATION DETAIL, ITS-26.

DETAIL E

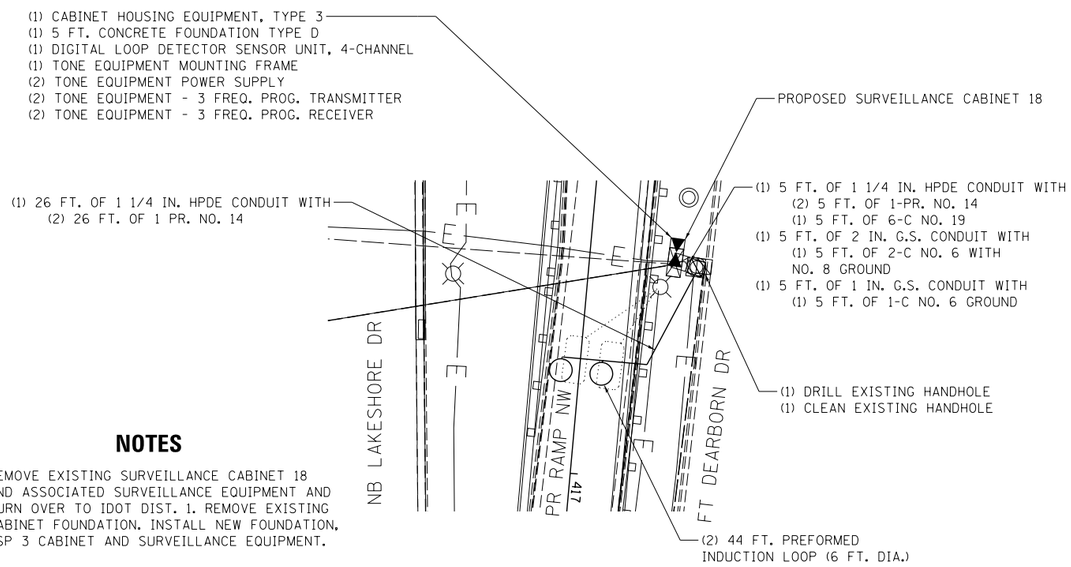

NOTES

1. REMOVE EXISTING SURVEILLANCE CABINET 18 AND ASSOCIATED SURVEILLANCE EQUIPMENT AND TURN OVER TO IDOT DIST. 1. REMOVE EXISTING CABINET FOUNDATION. INSTALL NEW FOUNDATION, ESP 3 CABINET AND SURVEILLANCE EQUIPMENT.

DETAIL F

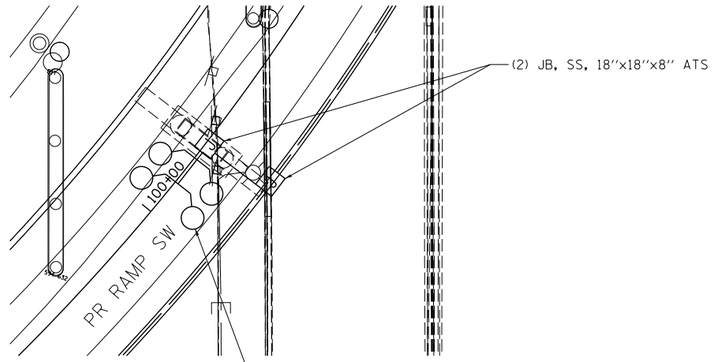

NOTES

1. LOOP CABLES GO FROM THE 18"x18"x8" JUNCTION BOXES MOUNTED UNDER THE BRIDGE DECK TO THE TYPE J JUNCTION BOX IN THE PARAPET WALL.

ITS-12

FILE NAME = D160L70-Sht-ITS-12.dgn

AECOM
303 EAST WACKER DRIVE, SUITE 1400
CHICAGO, IL 60601-5276
PHONE: (312) 373-7700 FAX: (312) 373-6800

USER NAME = auyeungh	DESIGNED - GWS	REVISED -
	DRAWN - JML	REVISED -
PLOT SCALE = 20.0000 ' / in.	CHECKED - JDG	REVISED -
PLOT DATE = 11/19/2014	DATE - 11/14/2014	REVISED -

STATE OF ILLINOIS
DEPARTMENT OF TRANSPORTATION

ITS LOCATION DETAILS

SCALE: N.T.S. | SHEET NO. 12 OF 28 SHEETS | STA. | TO STA.

F.A.I. RTE.	SECTION	COUNTY	TOTAL SHEETS	SHEET NO.
55	2010-080-B	COOK	886	301
		CONTRACT NO. 60L70		
	ILLINOIS FED. AID PROJECT			

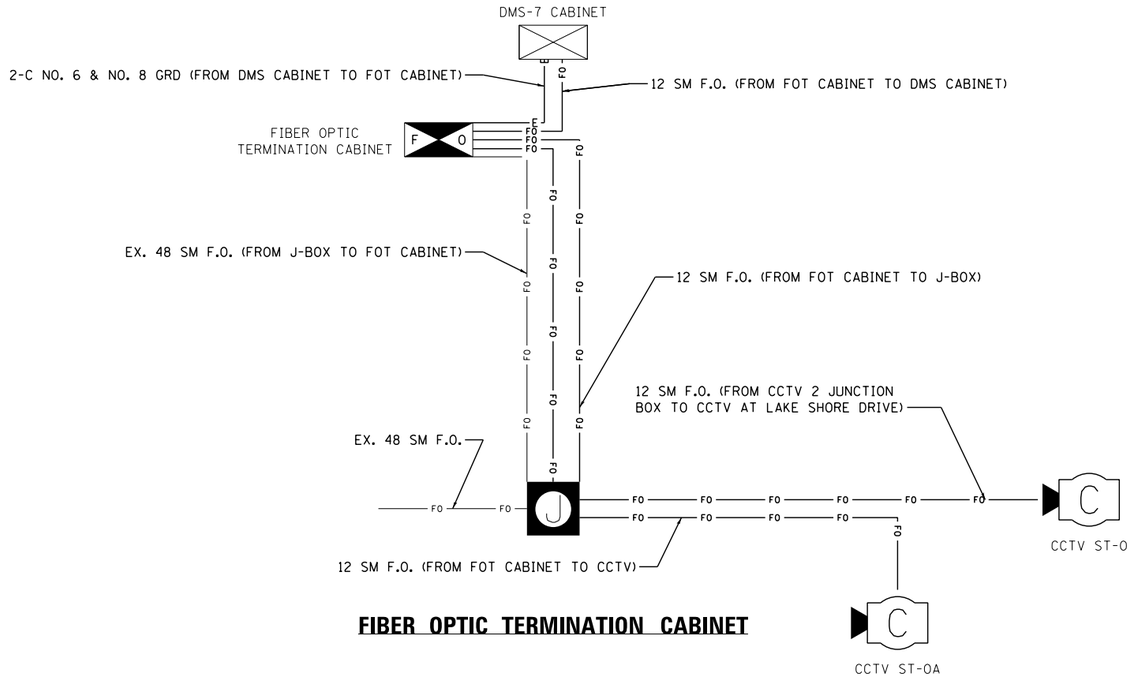

FIBER OPTIC TERMINATION CABINET

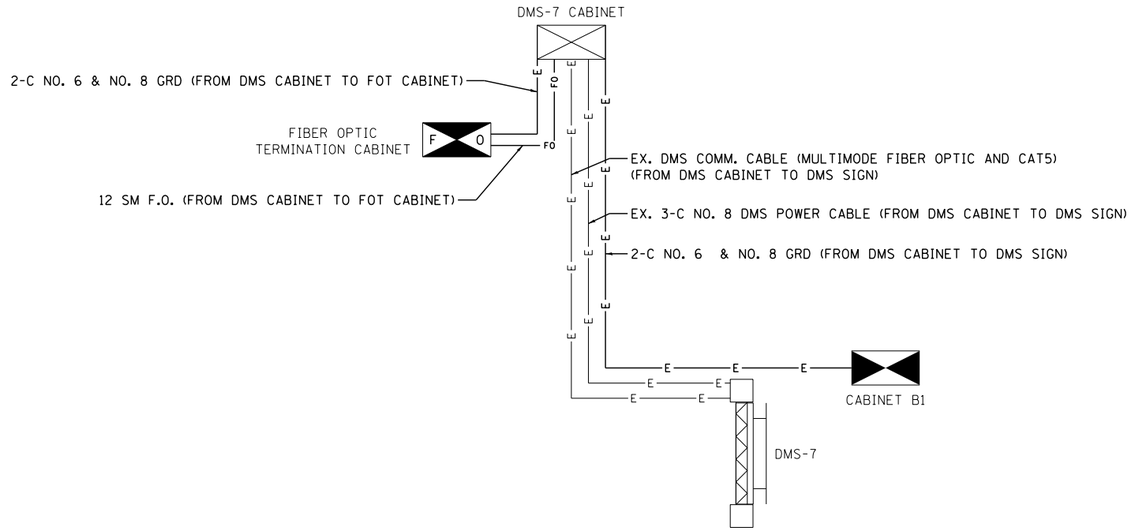

DMS-7

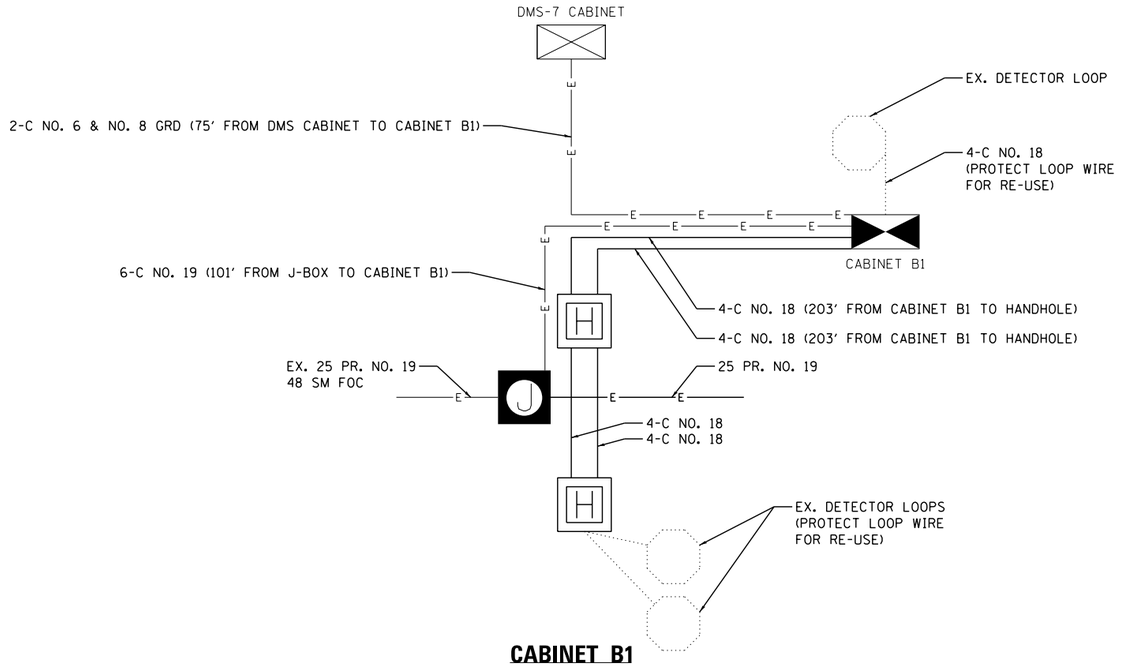

CABINET B1

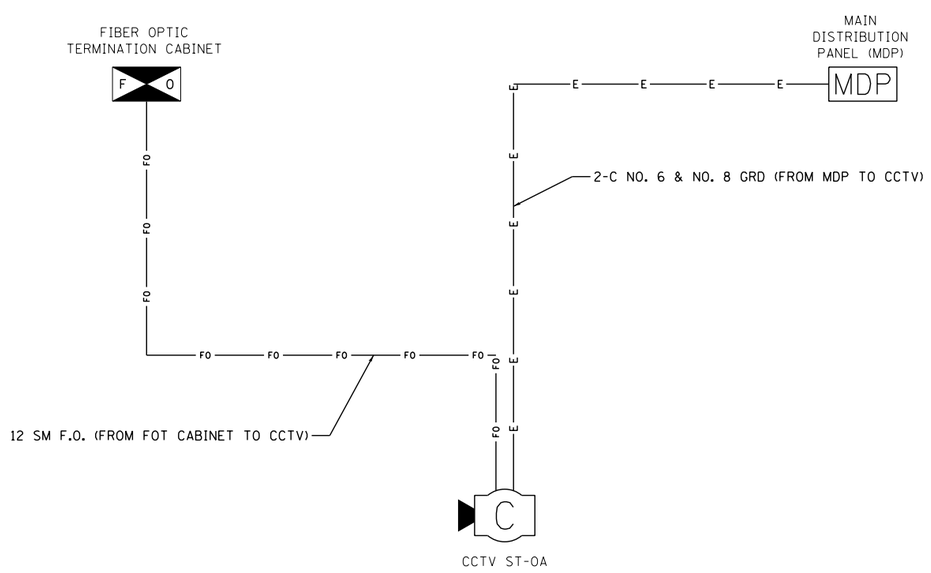

CCTV ST-OA

ITS-13

FILE NAME = D16BL70-Shs-ITS-13.dgn

AECOM
303 EAST WACKER DRIVE, SUITE 1400
CHICAGO, IL 60601-5276
PHONE: (312) 373-7700 FAX: (312) 373-6800

USER NAME = auyeungh	DESIGNED - GWS	REVISED -
	DRAWN - CAM	REVISED -
PLOT SCALE = 5.0000 ' / in.	CHECKED - JDG	REVISED -
PLOT DATE = 11/19/2014	DATE - 11/14/2014	REVISED -

STATE OF ILLINOIS
DEPARTMENT OF TRANSPORTATION

ITS PLANS – WIRING DIAGRAMS

SCALE: N.T.S. | SHEET NO. 13 OF 28 SHEETS | STA. | TO STA.

F.A.I. RTE.	SECTION	COUNTY	TOTAL SHEETS	SHEET NO.
55	2010-080-B	COOK	886	302
		CONTRACT NO. 60L70		
	ILLINOIS FED. AID PROJECT			

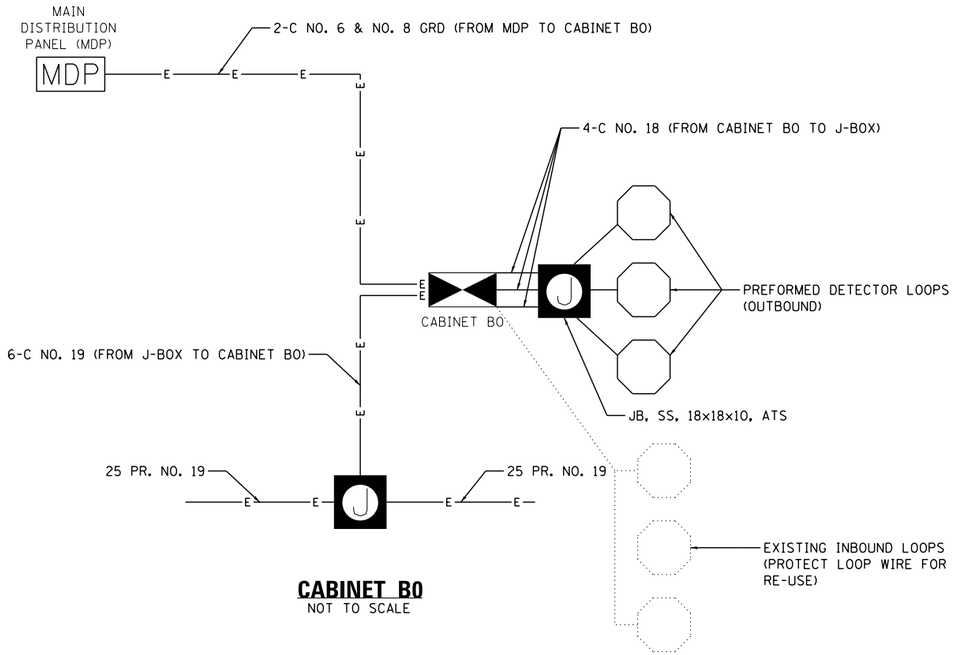

CABINET BO
NOT TO SCALE

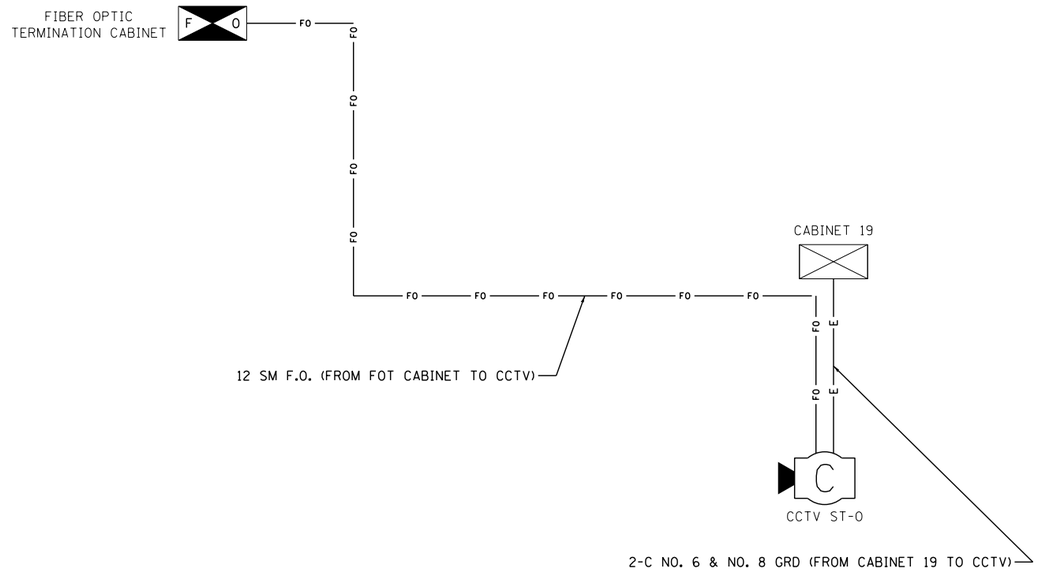

CCTV ST-O

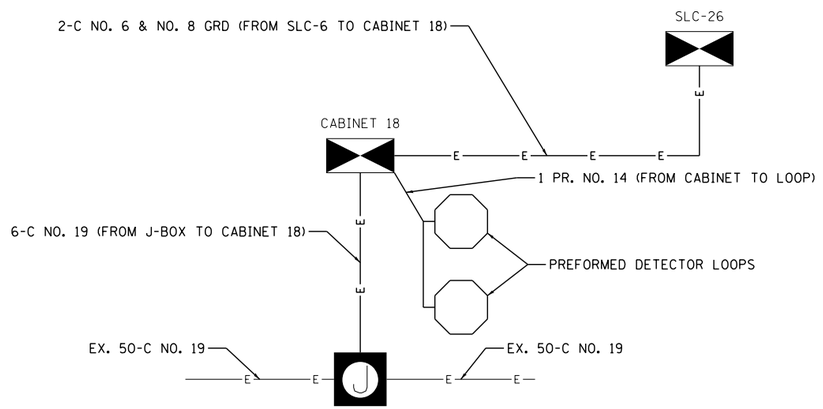

CABINET 18

ITS-14

FILE NAME = D160L70-Snt-ITS-14.dgn

AECOM
303 EAST WACKER DRIVE, SUITE 1400
CHICAGO, IL 60601-5276
PHONE: (312) 373-7700 FAX: (312) 373-6800

USER NAME = auyeungh	DESIGNED - GWS	REVISED -
	DRAWN - CAM	REVISED -
PLOT SCALE = 5.0000 ' / in.	CHECKED - JDG	REVISED -
PLOT DATE = 11/19/2014	DATE - 11/14/2014	REVISED -

STATE OF ILLINOIS
DEPARTMENT OF TRANSPORTATION

ITS PLANS – WIRING DIAGRAMS

SCALE: N.T.S. | SHEET NO. 14 OF 28 SHEETS | STA. | TO STA.

F.A.I. RTE.	SECTION	COUNTY	TOTAL SHEETS	SHEET NO.
55	2010-080-B	COOK	886	303
		CONTRACT NO. 60L70		
	ILLINOIS FED. AID PROJECT			

LEGEND

H PROPOSED

EXISTING

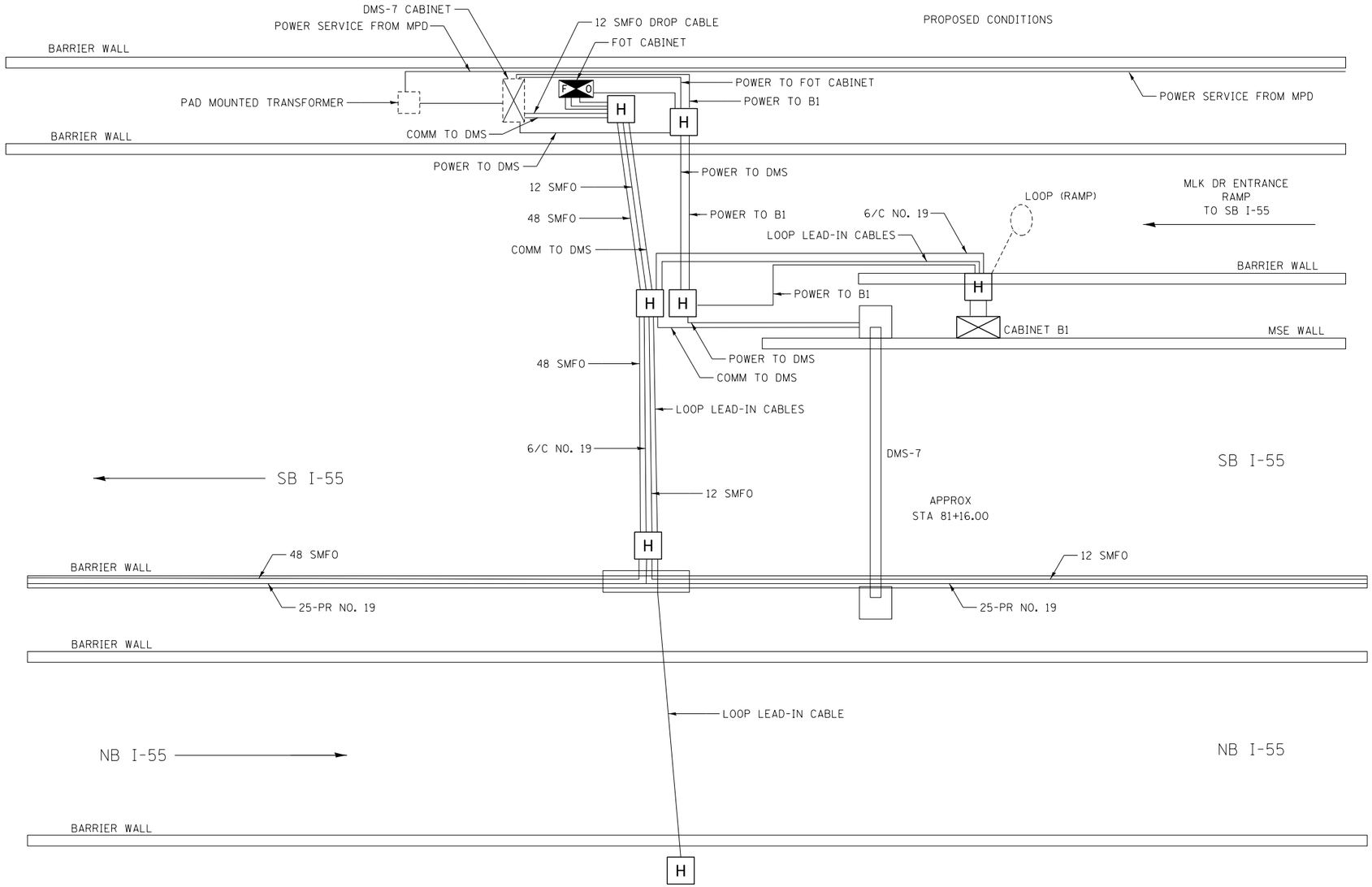

ITS-15

FILE NAME = D160L70-sht-ITS-15.dgn

AECOM
303 EAST WACKER DRIVE, SUITE 1400
CHICAGO, IL 60601-5276
PHONE: (312) 373-7700 FAX: (312) 373-6800

USER NAME = auyeungh	DESIGNED - GWS	REVISED -
	DRAWN - CAM	REVISED -
PLOT SCALE = 1.0000 ' / in.	CHECKED - JDG	REVISED -
PLOT DATE = 11/19/2014	DATE - 11/14/2014	REVISED -

STATE OF ILLINOIS
DEPARTMENT OF TRANSPORTATION

DMS-7/CABINET B1 DETAIL

SCALE: N.T.S. | SHEET NO. 15 OF 28 SHEETS | STA. | TO STA.

F.A.I. RTE.	SECTION	COUNTY	TOTAL SHEETS	SHEET NO.
55	2010-080-B	COOK	886	304
		CONTRACT NO. 60L70		
	ILLINOIS FED. AID PROJECT			

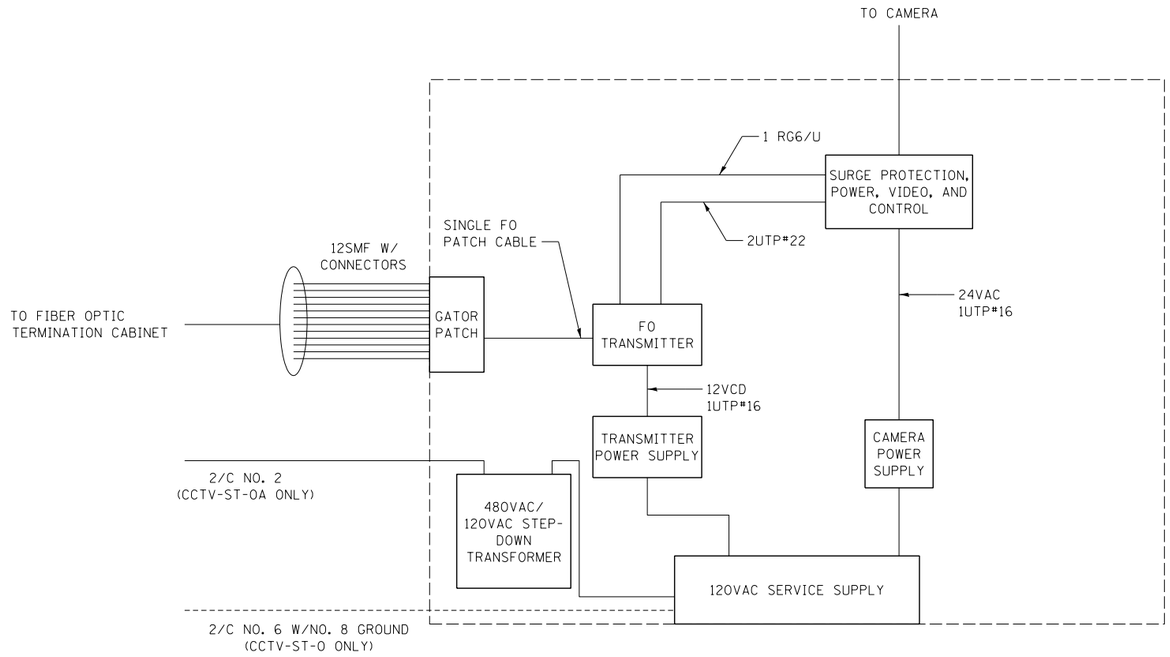

CCTV EQUIPMENT CABINET (TYPICAL)

FILE NAME = D160L70-sht-ITS-16.dgn

AECOM
303 EAST WACKER DRIVE, SUITE 1400
CHICAGO, IL 60601-5276
PHONE: (312) 373-7700 FAX: (312) 373-6800

USER NAME = auyeungh	DESIGNED - GWS	REVISED -
	DRAWN - CAM	REVISED -
PLOT SCALE = 1.0000 ' / in.	CHECKED - JDG	REVISED -
PLOT DATE = 11/19/2014	DATE - 11/14/2014	REVISED -

STATE OF ILLINOIS
DEPARTMENT OF TRANSPORTATION

CCTV EQUIPMENT CABINET DETAIL

SCALE: N.T.S. | SHEET NO. 16 OF 28 SHEETS | STA. | TO STA.

F.A.I. RTE.	SECTION	COUNTY	TOTAL SHEETS	SHEET NO.
55	2010-080-B	COOK	886	305
		CONTRACT NO. 60L70		
	ILLINOIS FED. AID PROJECT			

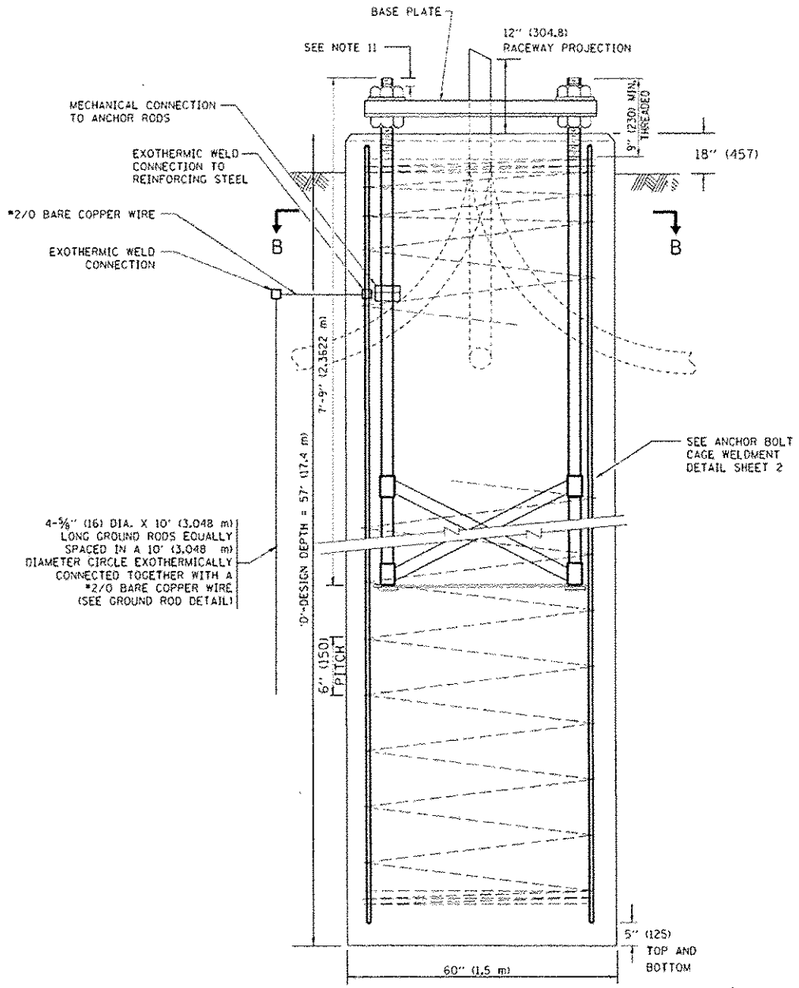

FOUNDATION ELEVATION

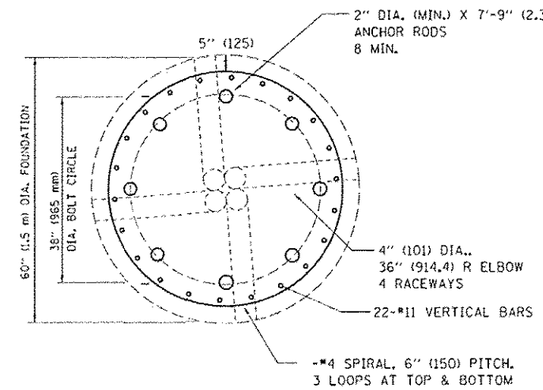

SECTION-B-B

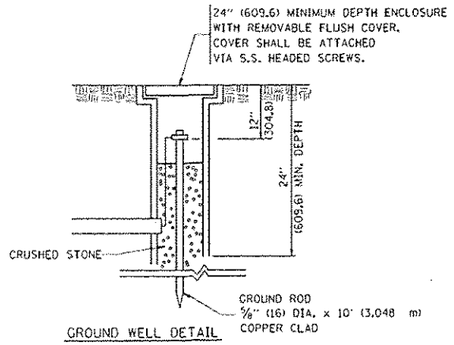

GROUND WELL DETAIL

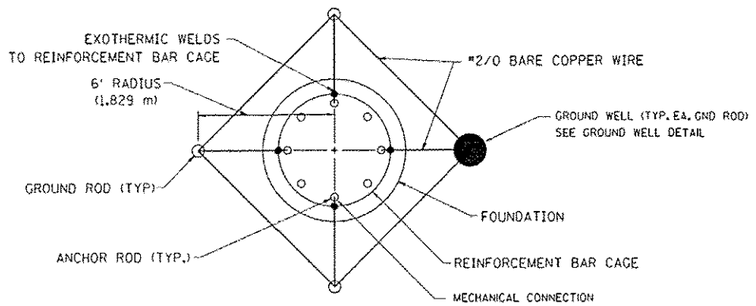

GROUND ROD DETAIL

DESIGN NOTES

(1) ALL DIMENSIONS IN INCHES (MILLIMETERS) UNLESS OTHERWISE SHOWN

(2) THE ANCHOR RODS SHALL BE VERTICAL NO ADJUSTMENT SHALL BE ALLOWED AFTER THE FOUNDATION IS PLACED.

(3) THE GAP BETWEEN THE FOUNDATION AND THE BASE PLATE SHALL BE ENCLOSED WITH A STAINLESS STEEL SCREEN FASTENED WITH A STAINLESS STEEL BAND.

(4) THE TOP OF THE FOUNDATION TO 18" (450) BELOW GRADE SHALL BE FORMED.

(5) SURFACE WATER WILL NOT BE PERMITTED TO ENTER THE HOLE AND ALL WATER WHICH MAY HAVE INFILTRATED INTO THE HOLE SHALL BE REMOVED BEFORE PLACING CONCRETE.

(6) STEEL ANCHOR ROD FORMS SHALL NOT BE REMOVED FOR A MINIMUM OF 3 DAYS AFTER CONCRETE IS POURED. THE CCTV CAMERA POLE SHALL NOT BE ERECTED UNTIL AFTER THE CONCRETE HAS BEEN CURED ACCORDING TO ARTICLE 1020.13.

(7) ANCHOR RODS SHALL BE STRAIGHT AND SHALL BE ACCORDING TO AASHTO M 314 OR ASTM F1554, GRADE 725(GRADE 105) AND GALVANIZED ACCORDING TO ARTICLE 1006.9.

(8) ANCHOR ROD INFORMATION SHALL BE SUBMITTED FOR APPROVAL AND SHALL BE FULLY COORDINATED FOR APPROVAL WITH CCTV CAMERA POLE MANUFACTURER REQUIREMENTS.

(9) ALL FOUNDATION REINFORCEMENT STEEL SHALL BE EPOXY COATED. REINFORCEMENT BARS SHALL BE ACCORDING TO ARTICLE 1006.10

(10) TWO ANCHOR RODS OPPOSITE EACH OTHER SHALL HAVE THE ANCHOR ROD THREADS PEENED AFTER NUTS ARE INSTALLED.

(11) A MINIMUM OF THREE FULL THREADS SHALL REMAIN EXPOSED AFTER LIGHT TOWER IN INSTALLED.

(12) ALL GROUNDING INDICATED IN THE PLANS SHALL BE INCLUDED IN THE COST OF THE CCTV CAMERA POLE FOUNDATION AND SHALL NOT BE PAID FOR SEPARATELY.

(13) CUT NUTS, OR JAM NUTS, ARE NOT ALLOWED

(14) ANCHOR ROD QUANTITY, DIAMETER, AND LENGTH SHALL BE DETERMINED BY THE TOWER MANUFACTURER AND APPROVED BY THE ENGINEER. EACH FOUNDATION SHALL HAVE A MINIMUM OF 8 ANCHOR RODS.

(15) COORDINATE THE ROD CIRCLE DIAMETER OF THE TOWER WITH THE DIAMETER OF THE ANCHOR ROD CAGE.

(16) THE FOUNDATION SHALL BE POURED MONOLITHICALLY AND SHALL HAVE NO CONSTRUCTION JOINTS.

(17) THE SHAFT LENGTH(S) ARE BASED ON NEAREST AVAILABLE SOIL BORINGS. IF DIFFERENT SOILS ARE ENCOUNTERED, THE ENGINEER SHALL BE NOTIFIED TO PROVIDE A REVISED LENGTH.

(18) THE COST OF THE FOUNDATION IS INCIDENTAL TO THE COST OF THE CCTV TOWER.

STATE OF ILLINOIS
AMISH T. BHATT
081-006249
LICENSED STRUCTURAL ENGINEER

Amish T. Bhatt 11/20/14
AMISH T. BHATT DATE
LICENSE EXPIRES 11/30/2014
Sheet Range: 306 & 307

ITS-17

FILE NAME = D:\80L70-its-ITS-17.dgn

AECOM
303 EAST WACKER DRIVE, SUITE 1400
CHICAGO, IL 60601-5276
PHONE (312) 373-7700 FAX (312) 373-6800

USER NAME = augeough	DESIGNED -	REVISED -
	DRAWN -	REVISED -
PLOT SCALE = 29'99/1978 ' / in.	CHECKED -	REVISED -
PLOT DATE = 11/19/2014	DATE - 11/14/2014	REVISED -

STATE OF ILLINOIS
DEPARTMENT OF TRANSPORTATION

CCTV SYSTEM – 100 AND 80 FOOT CAMERA POLE FOUNDATION
PLANS 1 OF 2

SCALE: N.T.S. | SHEET NO. 17 OF 29 SHEETS | STA. | TO STA.

F.A.I. RTE.	SECTION	COUNTY	TOTAL SHEETS	SHEET NO.
55	2010-080-B	COOK	886	306
		CONTRACT NO. 80L70		
	ILLINOIS FED. AID PROJECT			

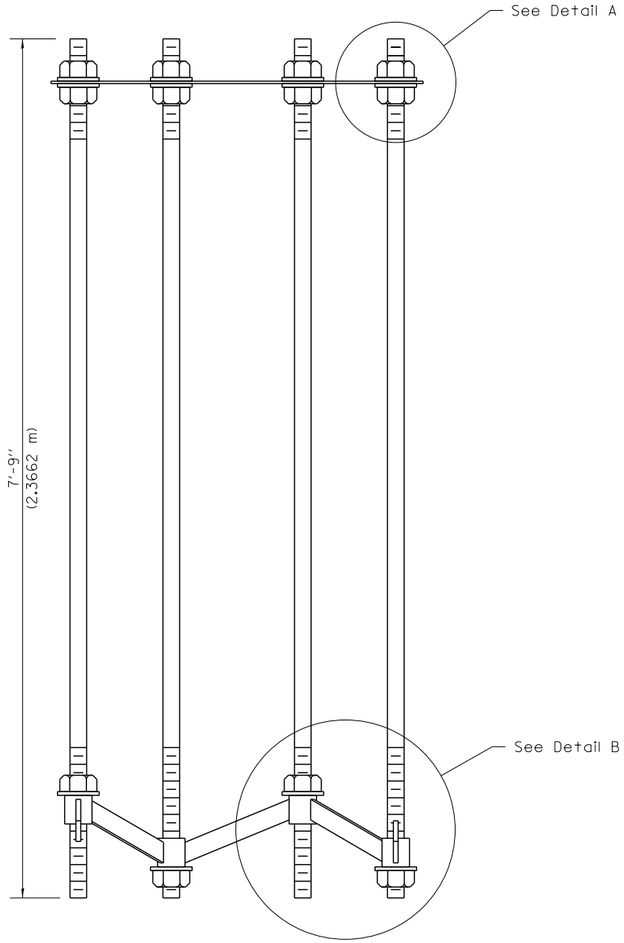

SECTION B–B

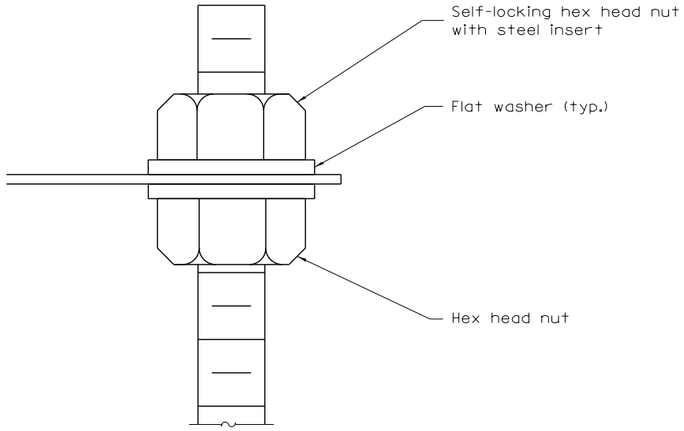

DETAIL A

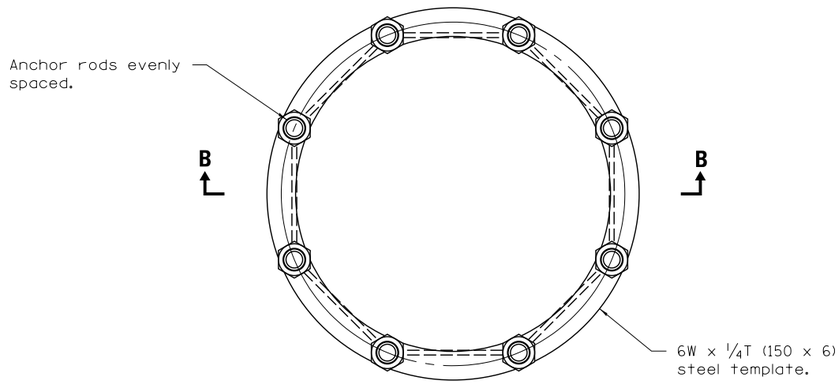

ANCHOR ROD CAGE (PLAN)

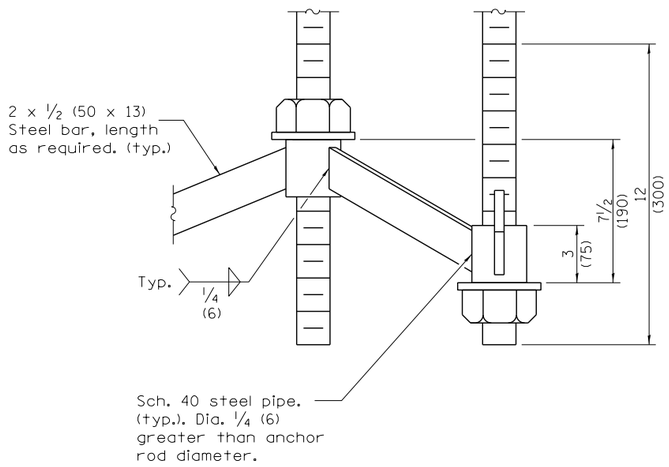

DETAIL B

ITS-18

FILE NAME = D:\80L70-ant-ITS-18.dgn

AECOM
303 EAST WACKER DRIVE, SUITE 1400
CHICAGO, IL 60601-5276
PHONE: (312) 373-7700 FAX: (312) 373-6800

USER NAME = auyeungh	DESIGNED -	REVISED -
	DRAWN -	REVISED -
PLOT SCALE = 29999.9999 ' / in.	CHECKED -	REVISED -
PLOT DATE = 11/19/2014	DATE - 11/14/2014	REVISED -

STATE OF ILLINOIS
DEPARTMENT OF TRANSPORTATION

CCTV SYSTEM – 100 AND 80 FOOT CAMERA POLE FOUNDATION
PLANS 2 OF 2

SCALE: N.T.S. | SHEET NO. 18 OF 29 SHEETS | STA. | TO STA.

F.A.I. RTE.	SECTION	COUNTY	TOTAL SHEETS	SHEET NO.
55	2010-080-B	COOK	886	307
		CONTRACT NO. 60L70		
		ILLINOIS	FED. AID PROJECT	

(Front View)

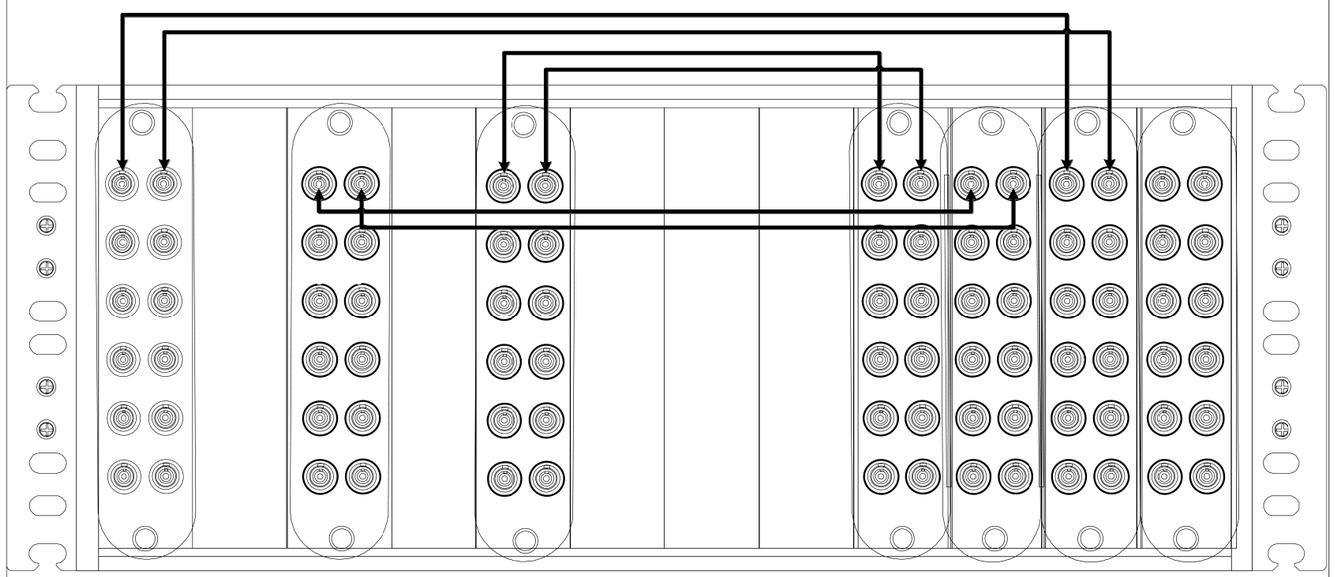

12 FOC to DMS-7

12 FOC to CCTV ST-0

12 FOC to CCTV ST-0A

48 FOC to HUB

Fiber Termination Rack

ITS-19

FILE NAME = D16OL70-sht-ITS-19.dgn

AECOM
303 EAST WACKER DRIVE, SUITE 1400
CHICAGO, IL 60601-5276
PHONE: (312) 373-7700 FAX: (312) 373-6800

USER NAME = auyeungh	DESIGNED - GWS	REVISED -
	DRAWN - CAM	REVISED -
PLOT SCALE = 1.0000 ' / in.	CHECKED - JDG	REVISED -
PLOT DATE = 11/19/2014	DATE - 11/14/2014	REVISED -

STATE OF ILLINOIS
DEPARTMENT OF TRANSPORTATION

FIBER OPTIC DETAILS
FIBER TERMINATION CABINET RACK – FRONT

SCALE: N.T.S. | SHEET NO. 19 OF 28 SHEETS | STA. | TO STA.

F.A.I. RTE.	SECTION	COUNTY	TOTAL SHEETS	SHEET NO.
55	2010-080-B	COOK	886	308
		CONTRACT NO. 60L70		
	ILLINOIS FED. AID PROJECT			

(Back View)

FIBERS ARE ASSIGNED AS FOLLOWS:

1. CONNECTOR MODULE (A-L)
2. PORT ASSIGNMENT (1-12)

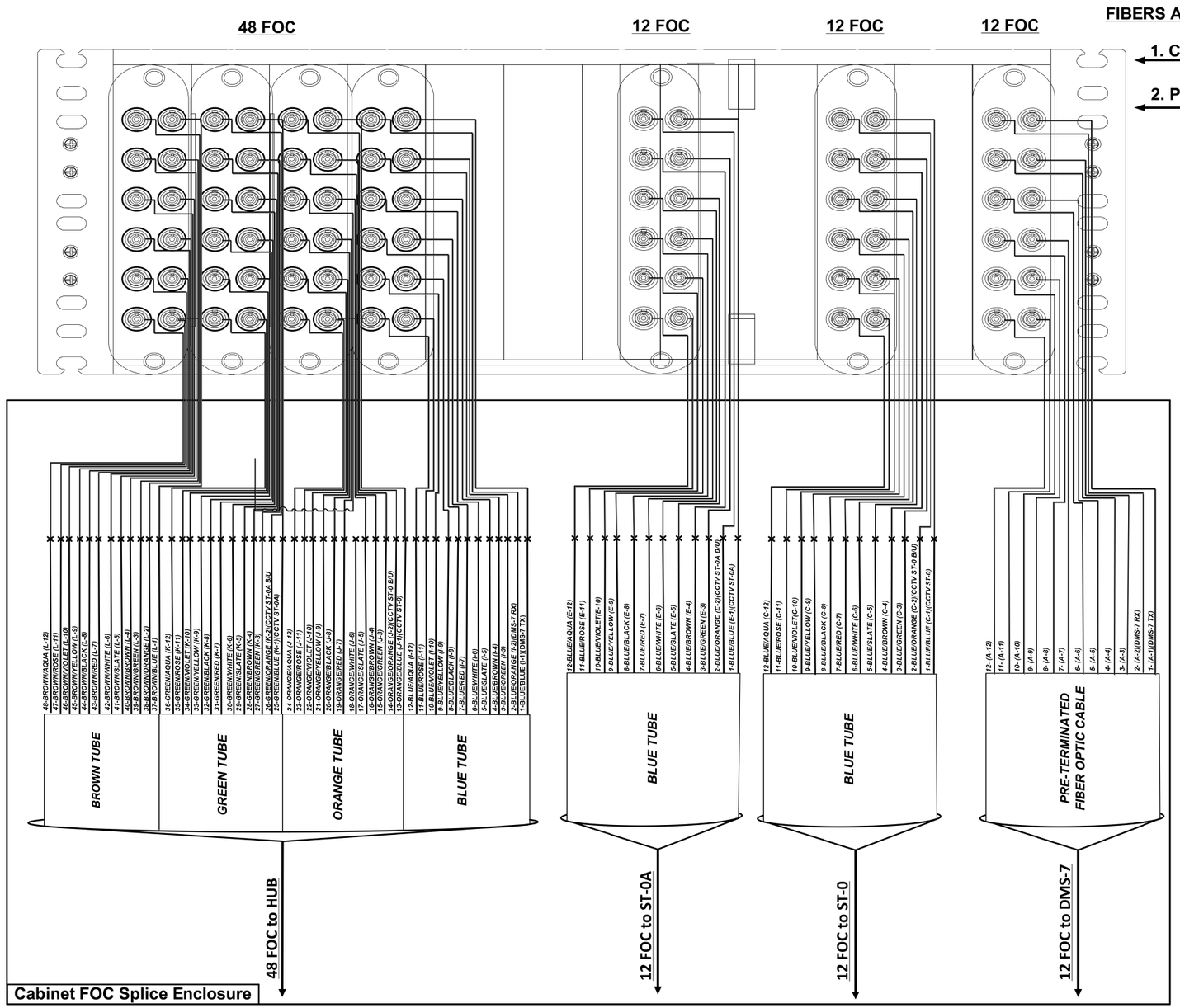

ITS-20

FILE NAME = D160L70-sht-ITS-20.dgn

AECOM
303 EAST WACKER DRIVE, SUITE 1400
CHICAGO, IL 60601-5276
PHONE: (312) 373-7700 FAX: (312) 373-6800

USER NAME = auyeungh	DESIGNED - GWS	REVISED -
	DRAWN - CAM	REVISED -
PLOT SCALE = 308.5710 ' / in.	CHECKED - JDG	REVISED -
PLOT DATE = 11/19/2014	DATE - 11/14/2014	REVISED -

STATE OF ILLINOIS
DEPARTMENT OF TRANSPORTATION

FIBER OPTIC DETAILS
FIBER TERMINATION CABINET RACK – BACK

SCALE: N.T.S. | SHEET NO. 20 OF 28 SHEETS | STA. | TO STA.

F.A.I. RTE.	SECTION	COUNTY	TOTAL SHEETS	SHEET NO.
55	2010-080-B	COOK	886	309
		CONTRACT NO. 60L70		
	ILLINOIS FED. AID PROJECT			

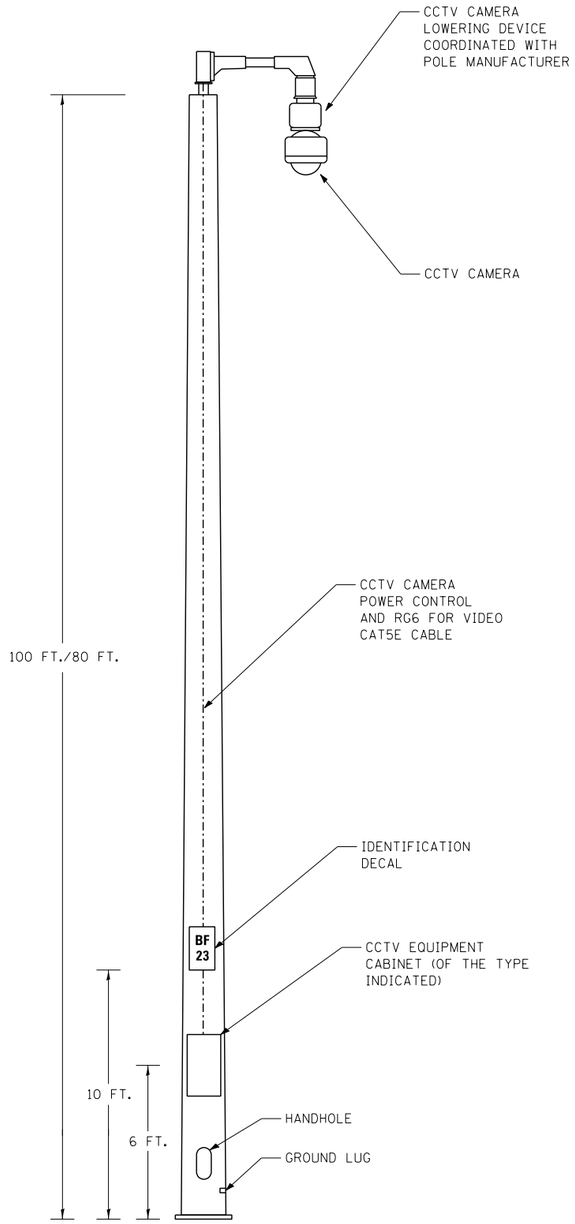

ELEVATION

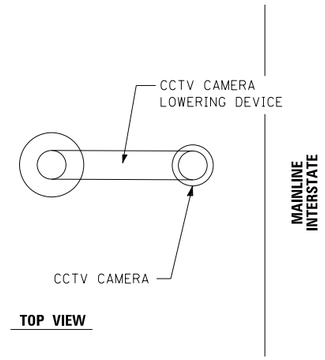

TOP VIEW

GENERAL NOTES

1. LOADING AND ALLOWABLE STRESS CRITERIA: 2009 AASHTO
2. MAXIMUM 1-INCH POLE TOP DEFLECTION WITH 30 MPH WIND VELOCITY, NO GUST.
3. LOCATIONS OF THE CCTV CAMERA INSTALLATIONS ARE APPROXIMATE. THE CONTRACTOR MAY ADJUST THE LOCATIONS OF THE INSTALLATIONS TO FACILITATE INSTALLATION WITH WRITTEN APPROVAL OF THE RESIDENT ENGINEER AND THE ELECTRICAL DESIGN SECTION. ALL STANDARD NON-FRANGIBLE SETBACK REQUIREMENTS AS WELL AS CLEAR ZONE REQUIREMENTS SHALL BE MAINTAINED.
4. THE POLE SHALL BE A MAXIMUM OF THREE SECTIONS FOR FIELD ASSEMBLY. THE POLE SHAFTS SHALL BE A ROUND CROSS SECTION AND MEET THE REQUIREMENTS OF ASTM A595 GRADE A WITH A MINIMUM YIELD STRENGTH OF 55,000 PSI. THE BOTTOM SECTION SHALL HAVE A MINIMUM .3125 WALL THICKNESS AND MINIMUM DIAMETER OF 23". THE POLE SHALL HAVE A PROVISION FOR VENTING AT THE TOP AND BOTTOM TO PREVENT CONDENSATION BUILDUP ON THE INTERIOR OF THE POLE SHAFT.
5. CABLE SUPPORTS SHALL BE PROVIDED OF ALL CABLES INSIDE OF POLE SO THAT NO CABLE LOADING IS EXCEEDED. CALCULATIONS SHALL BE SUBMITTED FOR THE CABLES BEING FURNISHED.
6. ALL EQUIPMENT SHALL BE GROUNDED.
7. DOCUMENTATION SHALL BE SUBMITTED THAT THE POLE IS FULLY COORDINATED WITH THE CAMERA LOWERING DEVICE.
8. ALL CABLES, INCLUDING LOWERING DEVICE CABLES, SHALL BE WITHIN THE POLE SHAFT. EXTERNAL CABLING WILL NOT BE PERMITTED.
9. UNLESS OTHERWISE INDICATED, OR AS DIRECTED BY THE ENGINEER, THE CAMERA LOWERING DEVICE SHALL BE ORIENTED PERPENDICULAR TO THE MAINLINE INTERSTATE FOR THE LEAST OBSTRUCTED VIEW OF THE INTERSTATE ROADWAY.

MATERIAL REQUIREMENTS

COMPONENT	ASTM DESIGNATION	MIN. YIELD (KSI)
POLE SHAFT	A572 GR. 65	65
BASE PLATE	A36	36
POLE TOP PLATE	A36	36
ANCHOR BOLTS	F1554 GR. 55	55
GALVANIZING, STRUCTURE	A123	N/A
GALVANIZING, HARDWARE	A153	N/A

FILE NAME = D160L70-sht-ITS-21.dgn

AECOM
303 EAST WACKER DRIVE, SUITE 1400
CHICAGO, IL 60601-5276
PHONE: (312) 373-7700 FAX: (312) 373-6800

USER NAME = auyeungh	DESIGNED - GWS	REVISED -
	DRAWN - CAM	REVISED -
PLOT SCALE = 308.5710 ' / in.	CHECKED - JDG	REVISED -
PLOT DATE = 11/19/2014	DATE - 11/14/2014	REVISED -

STATE OF ILLINOIS
DEPARTMENT OF TRANSPORTATION

CCTV CAMERA STRUCTURE
100 FT. M.H./80 FT. M.H., GALVANIZED STEEL

SCALE: N.T.S. | SHEET NO. 21 OF 28 SHEETS | STA. | TO STA.

F.A.I. RTE.	SECTION	COUNTY	TOTAL SHEETS	SHEET NO.
55	2010-080-B	COOK	886	310
		CONTRACT NO. 60L70		
	ILLINOIS	FED. AID PROJECT		

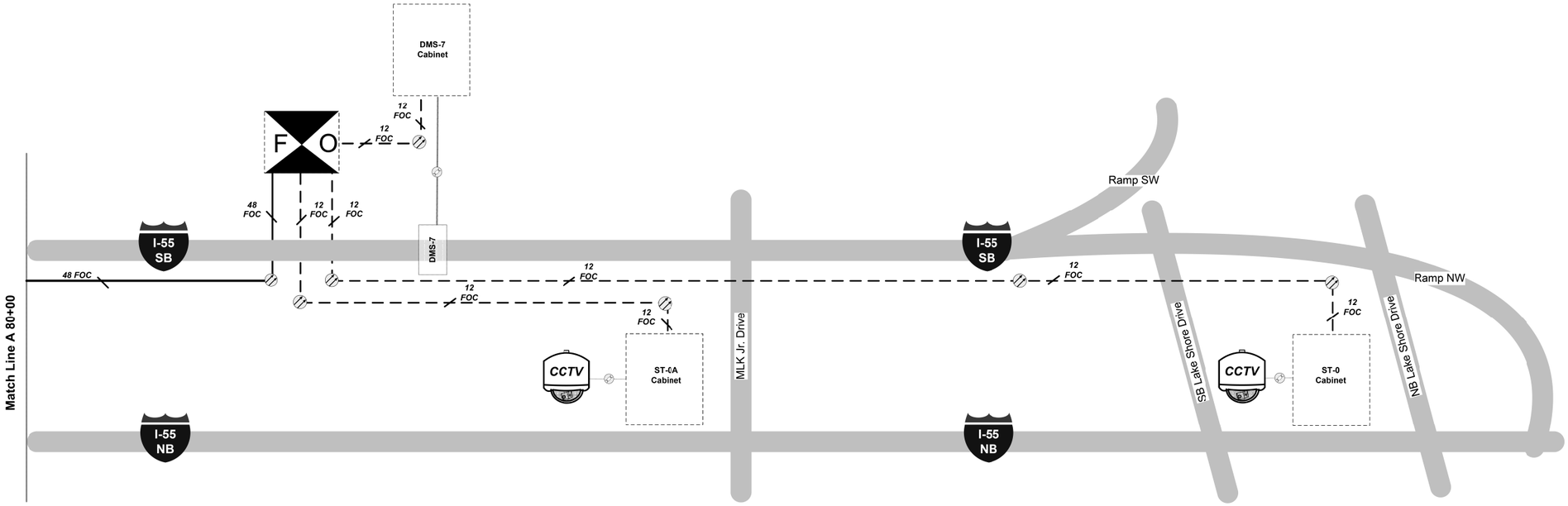

KEY

DMS XXX	Dynamic Message Sign		Copper Comm. Cable
			Fiber Cable Location
F O	Indicates Fiber Optic Splice Cabinet		Indicates ITS cabinet
			12 Count FOC
CCTV	PTZ Camera		48 Count FOC

I-55 ITS ONE-LINE COMMUNICATION DRAWING

ITS-22

FILE NAME = D16OL70-sht-ITS-22.dgn

AECOM
303 EAST WACKER DRIVE, SUITE 1400
CHICAGO, IL 60601-5276
PHONE: (312) 373-7700 FAX: (312) 373-6800

USER NAME = auyeungh	DESIGNED - GWS	REVISED -
	DRAWN - CAM	REVISED -
PLOT SCALE = 308.5710 ' / in.	CHECKED - JDG	REVISED -
PLOT DATE = 11/19/2014	DATE - 11/14/2014	REVISED -

STATE OF ILLINOIS
DEPARTMENT OF TRANSPORTATION

I-55 ITS FOC COMMUNICATION

SCALE: N.T.S. | SHEET NO. 22 OF 28 SHEETS | STA. | TO STA.

F.A.I. RTE.	SECTION	COUNTY	TOTAL SHEETS	SHEET NO.
55	2010-080-B	COOK	886	311
		CONTRACT NO. 60L70		
	ILLINOIS	FED. AID PROJECT		

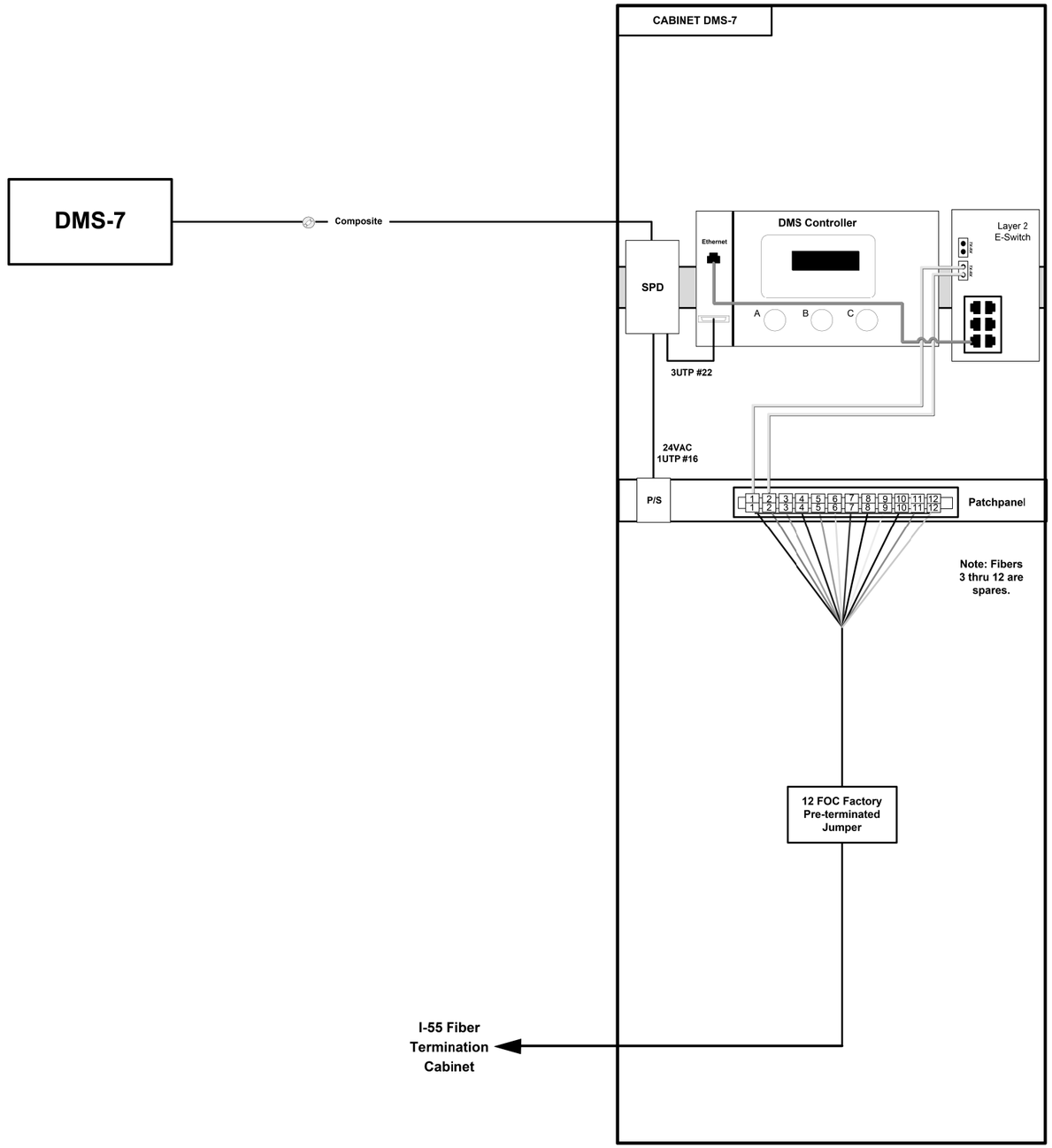

KEY

- DMS XXX — Dynamic Message Sign
- CCTV — PTZ Carrera
- Layer 2 E-Switch — Ethernet Switch Layer 2
- DMS Controller
- Patch Panel
- SPD — Surge Protection Device
- Fiber Optic Splice
- Fiber Optic Jumper
- Fiber Cable Location
- Copper Comm. Cable
- 12 Count FOC
- 48 Count FOC

DETAILS DMS-7

ITS-23

FILE NAME = D:\60L70-sht-ITS-23.dgn

AECOM
303 EAST WACKER DRIVE, SUITE 1400
CHICAGO, IL 60601-5276
PHONE: (312) 373-7700 FAX: (312) 373-6800

USER NAME = auyeungh	DESIGNED - GWS	REVISED -
	DRAWN - CAM	REVISED -
PLOT SCALE = 308.5710 ' / in.	CHECKED - JDG	REVISED -
PLOT DATE = 11/19/2014	DATE - 11/14/2014	REVISED -

STATE OF ILLINOIS
DEPARTMENT OF TRANSPORTATION

FIBER OPTIC DETAILS
DMS–7 DETAILS

SCALE: N.T.S. | SHEET NO. 23 OF 28 SHEETS | STA. | TO STA.

F.A.I. RTE.	SECTION	COUNTY	TOTAL SHEETS	SHEET NO.
55	2010-080-B	COOK	886	312
		CONTRACT NO. 60L70		
		ILLINOIS FED. AID PROJECT		

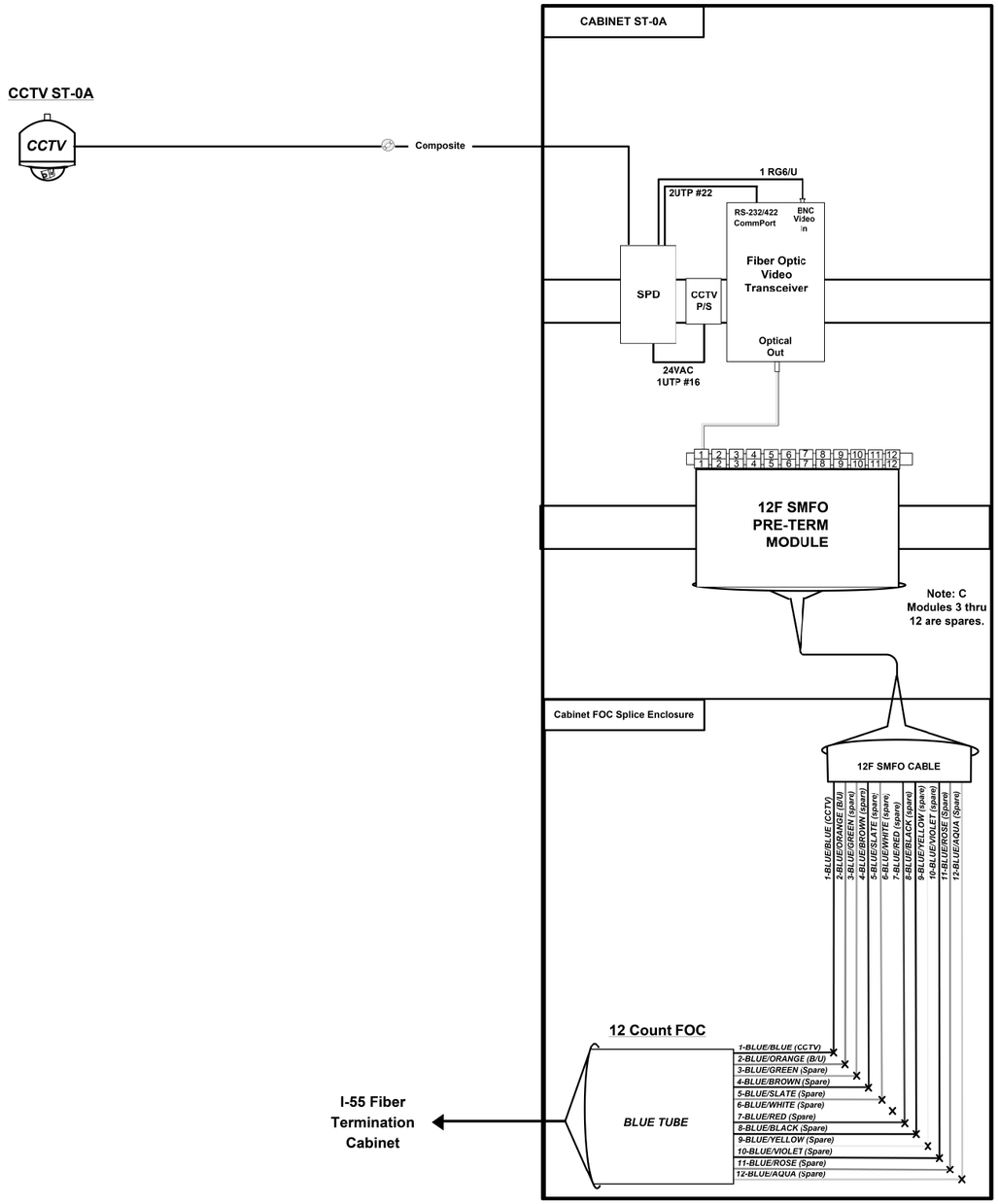

KEY

- DMS XXX — Dynamic Message Sign
- CCTV — PTZ Camera
- RS-232/422 CommPort / BNC Video In / Fiber Optic Video Transceiver / Optical Out — Fiber Optic Video Transceiver
- Pre-Term Connection Module
- SPD — Surge Protection Device
- Fiber Optic Splice
- Fiber Optic Jumper
- Fiber Cable Location
- Copper Comm. Cable
- 12 Count FOC
- 48 Count FOC

DETAILS CABINET ST-0A

ITS-24

FILE NAME = D1GBL70-sht-ITS-24.dgn

AECOM
303 EAST WACKER DRIVE, SUITE 1400
CHICAGO, IL 60601-5276
PHONE: (312) 373-7700 FAX: (312) 373-6800

USER NAME = auyeungh	DESIGNED - GWS	REVISED -
	DRAWN - CAM	REVISED -
PLOT SCALE = 308.5710 ' / in.	CHECKED - JDG	REVISED -
PLOT DATE = 11/19/2014	DATE - 11/14/2014	REVISED -

STATE OF ILLINOIS
DEPARTMENT OF TRANSPORTATION

FIBER OPTIC DETAILS
CCTV ST-0A DETAIL

SCALE: N.T.S. | SHEET NO. 24 OF 28 SHEETS | STA. | TO STA.

F.A.I. RTE.	SECTION	COUNTY	TOTAL SHEETS	SHEET NO.
55	2010-080-B	COOK	886	313
		CONTRACT NO. 60L70		
	ILLINOIS	FED. AID PROJECT		

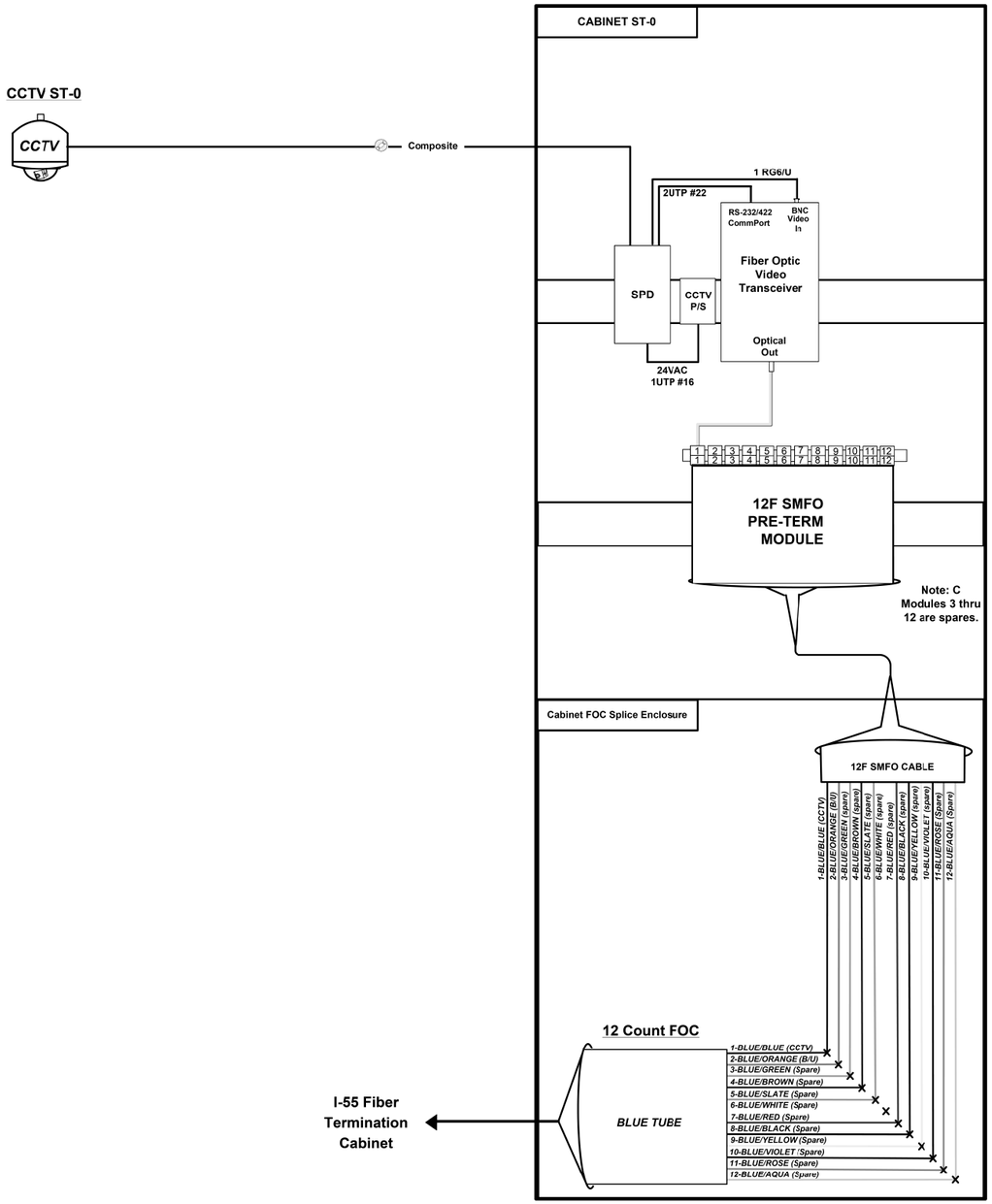

KEY

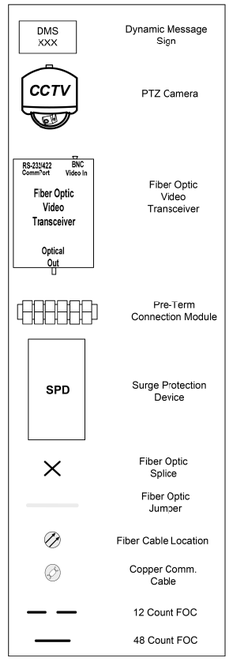

DETAILS CABINET ST-0

ITS-25

FILE NAME = D160L70-sht-ITS-25.dgn

AECOM
303 EAST WACKER DRIVE, SUITE 1400
CHICAGO, IL 60601-5276
PHONE: (312) 373-7700 FAX: (312) 373-6800

USER NAME = auyeungh	DESIGNED - GWS	REVISED -
	DRAWN - CAM	REVISED -
PLOT SCALE = 308.5710 ' / in.	CHECKED - JDG	REVISED -
PLOT DATE = 11/19/2014	DATE - 11/14/2014	REVISED -

STATE OF ILLINOIS
DEPARTMENT OF TRANSPORTATION

FIBER OPTIC DETAILS
CCTV ST-0

SCALE: N.T.S. | SHEET NO. 25 OF 28 SHEETS | STA. | TO STA.

F.A.I. RTE.	SECTION	COUNTY	TOTAL SHEETS	SHEET NO.
55	2010-080-B	COOK	886	314
		CONTRACT NO. 60L70		
	ILLINOIS FED. AID PROJECT			

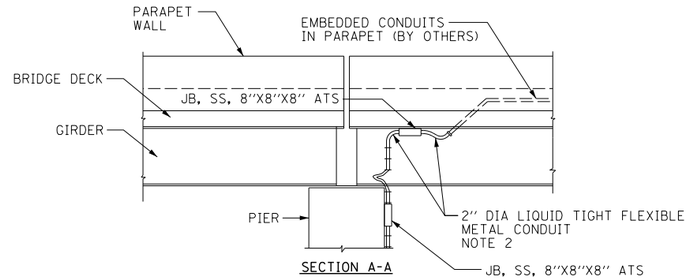

SECTION A-A

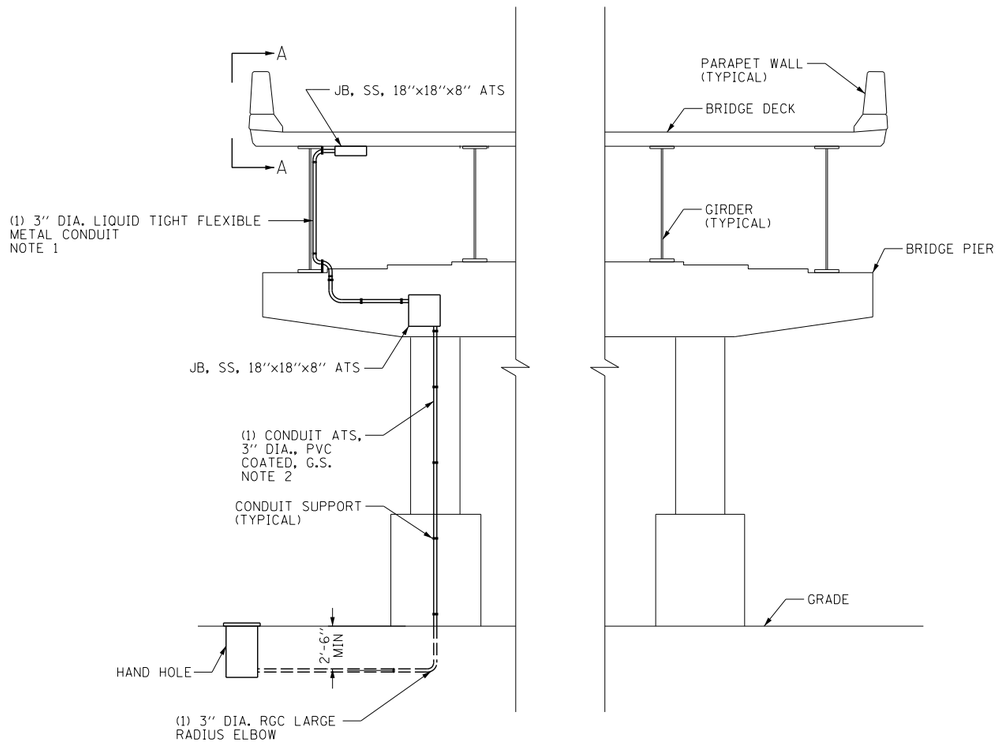

CONDUIT ATTACHED TO PIER INSTALLATION DETAIL

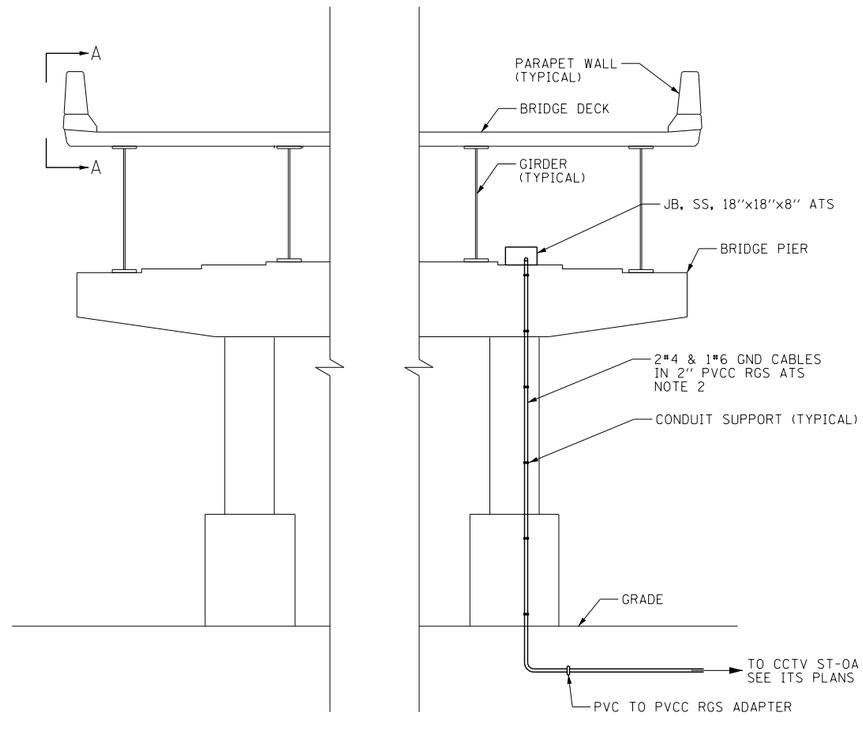

CONDUIT ATTACHED TO PIER INSTALLATION DETAIL
PIER 1W - LOOKING EAST

NOTES:

1. THE FLEXIBLE CONDUIT WILL BE MEASURED AND PAID FOR UNDER THE "CONDUIT ATTACHED TO STRUCTURE, 2" DIA., PVC COATED, GALVANIZED STEEL" PAY ITEMS.
2. AT ALL LOCATIONS WHERE 17'-3" MINIMUM CLEARANCE UNDER PIER CAP CAN BE PROVIDED, CONDUIT ATTACHED TO THE STRUCTURE SHALL BE PLACED IN THE REVEAL OF THE PIER AND SHALL NOT CONFLICT WITH DRAINAGE INFRASTRUCTURE.

FILE NAME = D160L70-sht-ITS-26.dgn

AECOM
303 EAST WACKER DRIVE, SUITE 1400
CHICAGO, IL 60601-5276
PHONE: (312) 373-7700 FAX: (312) 373-6800

USER NAME = auyeungh	DESIGNED - GWS	REVISED -
	DRAWN - CAM	REVISED -
PLOT SCALE = 308.5710 ' / in.	CHECKED - JDG	REVISED -
PLOT DATE = 11/19/2014	DATE - 11/14/2014	REVISED -

STATE OF ILLINOIS
DEPARTMENT OF TRANSPORTATION

ITS CONDUIT ATTACHED TO PIER DETAIL

SCALE: N.T.S. | SHEET NO. 26 OF 28 SHEETS | STA. | TO STA.

F.A.I. RTE.	SECTION	COUNTY	TOTAL SHEETS	SHEET NO.
55	2010-080-B	COOK	886	315
		CONTRACT NO. 60L70		
	ILLINOIS FED. AID PROJECT			

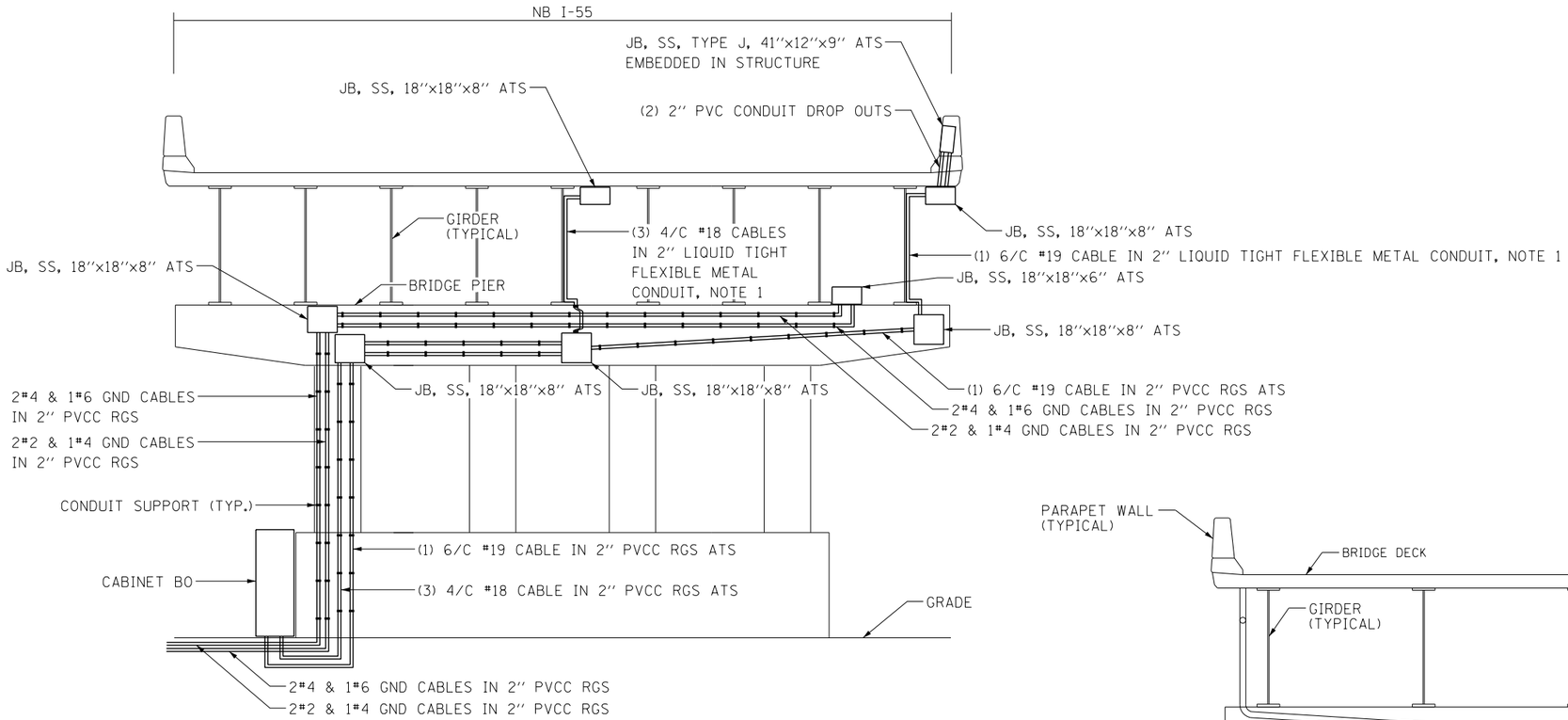

CONDUIT ATTACHED TO PIER 3W INSTALLATION DETAIL - LOOKING EAST

(NOT TO SCALE)

NOTES:

1. THE FLEXIBLE CONDUIT WILL BE MEASURED AND PAID FOR UNDER THE "CONDUIT ATTACHED TO STRUCTURE, PVC COATED GALVANIZED STEEL" PAY ITEMS.
2. CONDUIT ATTACHED TO THE STRUCTURE SHALL BE PLACED SUCH THAT IT DOES NOT CONFLICT WITH DRAINAGE INFRASTRUCTURE.
3. COORDINATE THE INSTALLATION OF THE ELECTRICAL CONDUIT WITH THE PROPOSED LOCATION OF THE DRAINAGE PIPES TO AVOID CONFLICTS.
4. SEE PROPOSED ITS PLANS FOR THE CONTINUATION OF THE POWER FEEDS TO THE DMS SIGN.

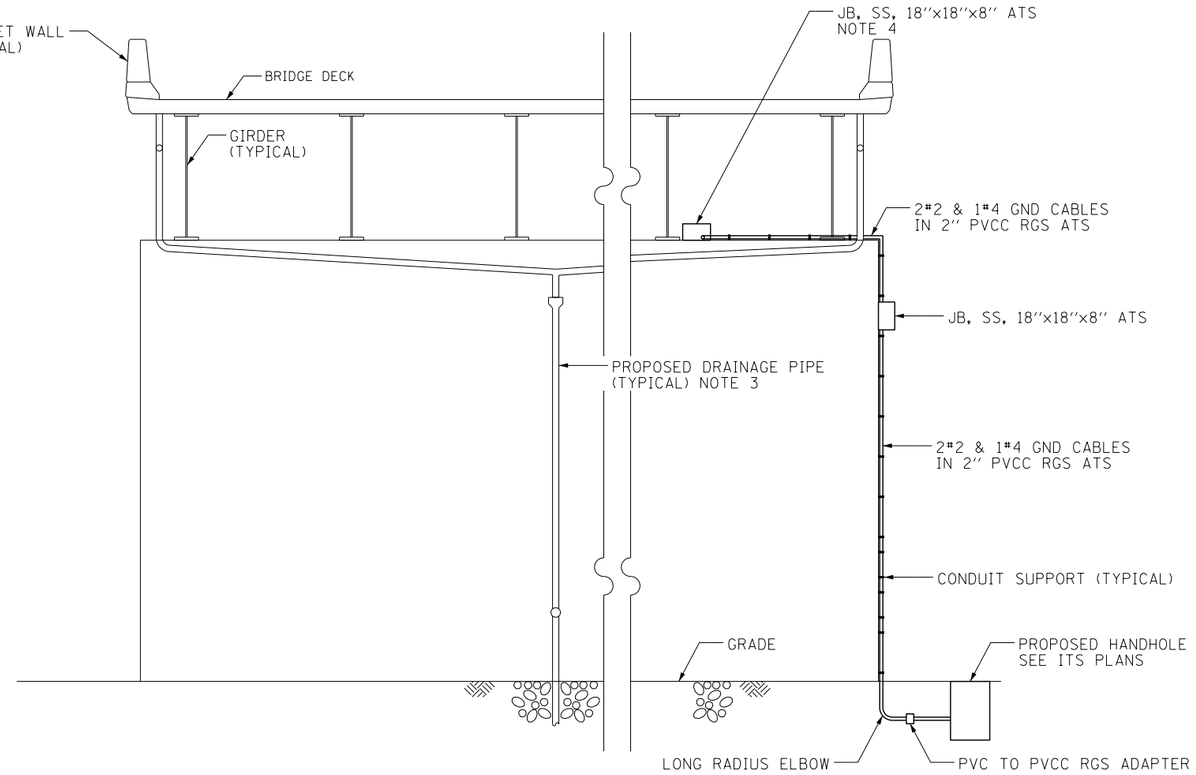

CONDUIT ATTACHED TO WEST ABUTMENT INSTALLATION DETAIL

(NOT TO SCALE)

ITS-27

FILE NAME = D1680L70-sht-ITS-27.dgn

AECOM
303 EAST WACKER DRIVE, SUITE 1400
CHICAGO, IL 60601-5276
PHONE: (312) 373-7700 FAX: (312) 373-6800

USER NAME = auyeungh	DESIGNED - GWS	REVISED -
	DRAWN - CAM	REVISED -
PLOT SCALE = 308.5710 ' / in.	CHECKED - JDG	REVISED -
PLOT DATE = 11/19/2014	DATE - 11/14/2014	REVISED -

STATE OF ILLINOIS
DEPARTMENT OF TRANSPORTATION

ITS CONDUIT PIER 3W DETAIL

SCALE: N.T.S. | SHEET NO. 27 OF 28 SHEETS | STA. | TO STA.

F.A.I. RTE.	SECTION	COUNTY	TOTAL SHEETS	SHEET NO.
55	2010-080-B	COOK	886	316
		CONTRACT NO. 60L70		
	ILLINOIS	FED. AID PROJECT		

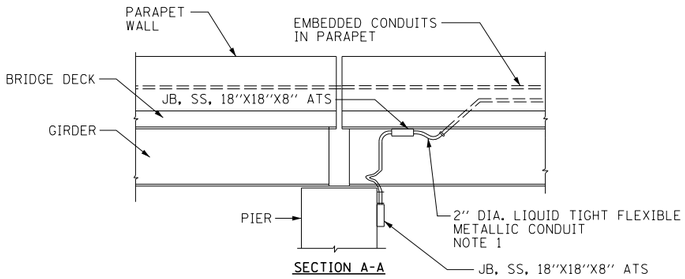

SECTION A-A

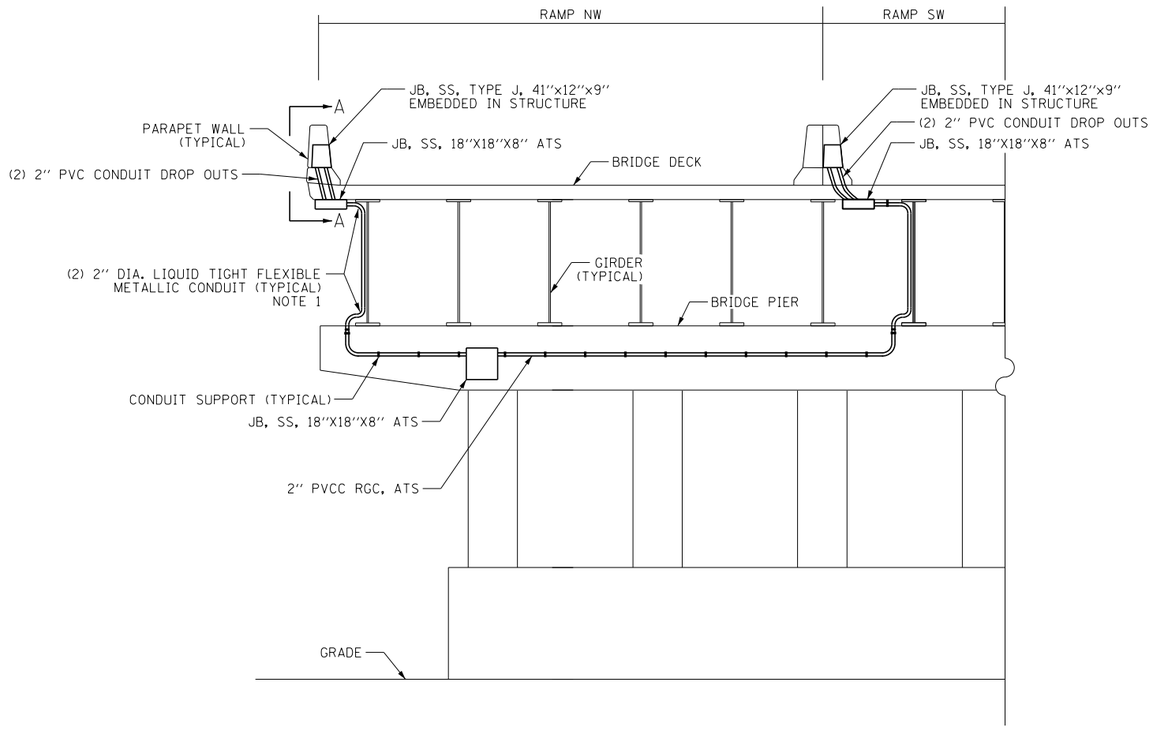

CONDUIT ATTACHED TO PIER 8W INSTALLATION DETAIL - LOOKING WEST

(NOT TO SCALE)

NOTES:

1. THE FLEXIBLE CONDUIT WILL BE MEASURED AND PAID FOR UNDER THE "CONDUIT ATTACHED TO STRUCTURE, PVC COATED GALVANIZED STEEL" PAY ITEMS.
2. COORDINATE THE INSTALLATION OF THE ITS CONDUIT WITH THE PROPOSED LOCATION OF THE DRAINAGE PIPES TO AVOID CONFLICTS.

ITS-27A

FILE NAME = D16BL70-sht-ITS-27A.dgn

AECOM
303 EAST WACKER DRIVE, SUITE 1400
CHICAGO, IL 60601-5276
PHONE: (312) 373-7700 FAX: (312) 373-6800

USER NAME = myersc	DESIGNED - PFD	REVISED -
	DRAWN - CAM	REVISED -
PLOT SCALE = 2.0000 ' / in.	CHECKED - WDS	REVISED -
PLOT DATE = 12/4/2014	DATE - 12/5/2014	REVISED -

STATE OF ILLINOIS
DEPARTMENT OF TRANSPORTATION

ITS CONDUIT ATTACHED TO PIER SW DETAIL

SCALE: N.T.S. | SHEET NO. 27A OF 28 SHEETS | STA. | TO STA.

F.A.I. RTE.	SECTION	COUNTY	TOTAL SHEETS	SHEET NO.
55	2010-080-B	COOK	886	316A
		CONTRACT NO. 60L70		
	ILLINOIS	FED. AID PROJECT		

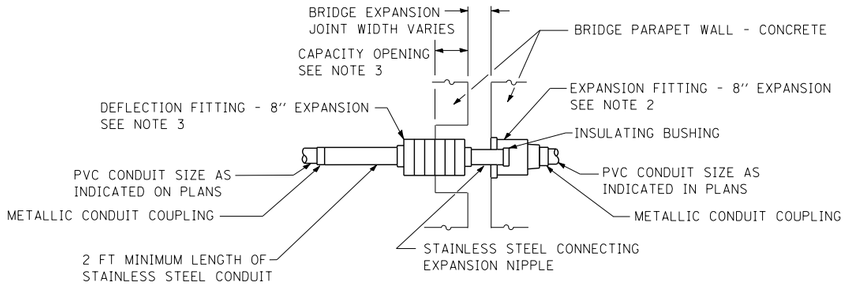

EXPANSION/DEFLECTION CONDUIT COUPLING DETAIL

NOTES 1 AND 6

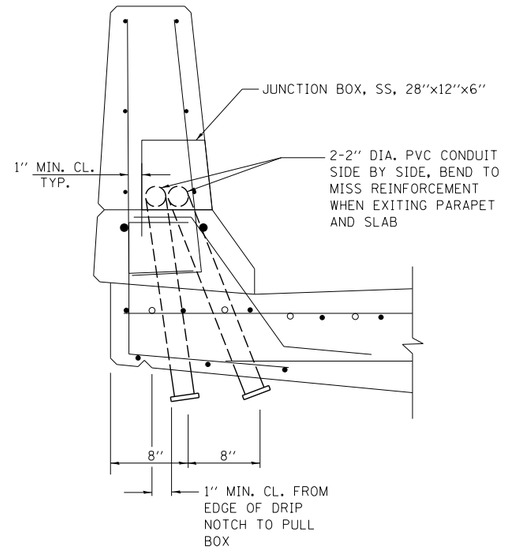

DROP-OUT AT PIER/ABUTMENT WALL

NOTES:

1. THE CONTRACTOR SHALL INSTALL A CONDUIT EXPANSION/DEFLECTION COUPLING AT THE JOINT LOCATIONS IN THE CONCRETE PARAPET ON THE BRIDGE CAPABLE OF ACCEPTING THE LONGITUDINAL MOVEMENT. ALL METALLIC PARTS OF THE COUPLING SHALL BE MADE OF STAINLESS STEEL OR AS APPROVED BY THE ENGINERR. ANY NON-STAINLESS METAL SHALL BE HOT DIP GALVANIZED AND COATED TO PREVENT REACTION WITH THE CONCRETE. THE COST OF THE COUPLING SHALL BE PART OF AND INCIDENTAL TO THE CONDUIT SYSTEM.

2. THE BARREL IN THE EXPANSION FITTING SHALL BE IN THE CONCRETE ON ONE SIDE OF THE EXPANSION JOINT. ONE HALF THE LENGTH OF THE DEFLECTION FITTING SHALL BE EMBEDDED IN THE CONCRETE ON THE OTHER SIDE OF THE COUPLING.

3. A CAVITY OPENING 3'' LARGER IN DIAMETER THAN THE DEFLECTION FITTING SHALL BE PROVIDED IN THE CONCRETE TO ENSURE PROPER PERFORMANCE OF THE COUPLING.

4. CAREFUL ATTENTION TO JOINT MOVEMENT OVER A RANGE OF OF TEMPERATURES SHALL BE COORDINATED WITH THE SELECTION AND INSTALLATION OF THE COUPLING TO ENSURE THE RANGE OF MOVEMENT OF THE COUPLING IS NOT EXEEDED AT TEMPERATURE EXTREMES.

5. ALL MANUFACTURER'S INSTALLATION INSTRUCTIONS SHALL BE CAREFULLY FOLLOWED TO ENSURE OPTIMUM PERFORMANCE OF THE EXPANSION/DEFLECTION COUPLING.

6. THE CONTRACTOR SHALL INSTALL COUPLINGS AT ALL BRIDGE EXPANSION JOINTS AND SHALL BE RESPONSIBLE TO DETERMINE THE PROPER NUMBER OF COUPLINGS REQUIRED. SEE STRUCTURAL DRAWINGS FOR THE EXPANSION JOINT LOCATIONS.

7. WITH THE APPROVAL OF THE ENGINEER, THE CONTRACTOR MAY SUBSTITUTE TWO (2) STAINLESS STEEL JUNCTION BOXES ATTACHED TO THE BACK OF THE WALL AND CONNECTED BY A HIGH GRADE OF FLEXIBLE METAL CONDUIT FOR ALL EXPANSION JOINTS. THIS SUBSTITUTION SHALL BE MADE AT NO ADDITIONAL COST TO THE DEPARTMENT.

FILE NAME = D160L70-sht-ITS-28.dgn

AECOM
303 EAST WACKER DRIVE, SUITE 1400
CHICAGO, IL 60601-5276
PHONE: (312) 373-7700 FAX: (312) 373-6800

USER NAME = auyeungh	DESIGNED - GWS	REVISED -
	DRAWN - CAM	REVISED -
PLOT SCALE = 308.5710 '/ in.	CHECKED - JDG	REVISED -
PLOT DATE = 11/19/2014	DATE - 11/14/2014	REVISED -

STATE OF ILLINOIS
DEPARTMENT OF TRANSPORTATION

ITS CONDUIT EXPANSION DETAIL

SCALE: N.T.S. | SHEET NO. 28 OF 28 SHEETS | STA. | TO STA.

F.A.I. RTE.	SECTION	COUNTY	TOTAL SHEETS	SHEET NO.
55	2010-080-B	COOK	886	317
		CONTRACT NO. 60L70		
	ILLINOIS FED. AID PROJECT			

FOR INFORMATION ONLY

ROUTE NO.	SECTION	COUNTY	TOTAL SHEETS	SHEET NO.
F. A. I.—55	SW-1818.3-1H	COOK	64	19
FED. ROAD DIV. NO. 4	ILLINOIS	PROJECT I-55-7(58)-286		

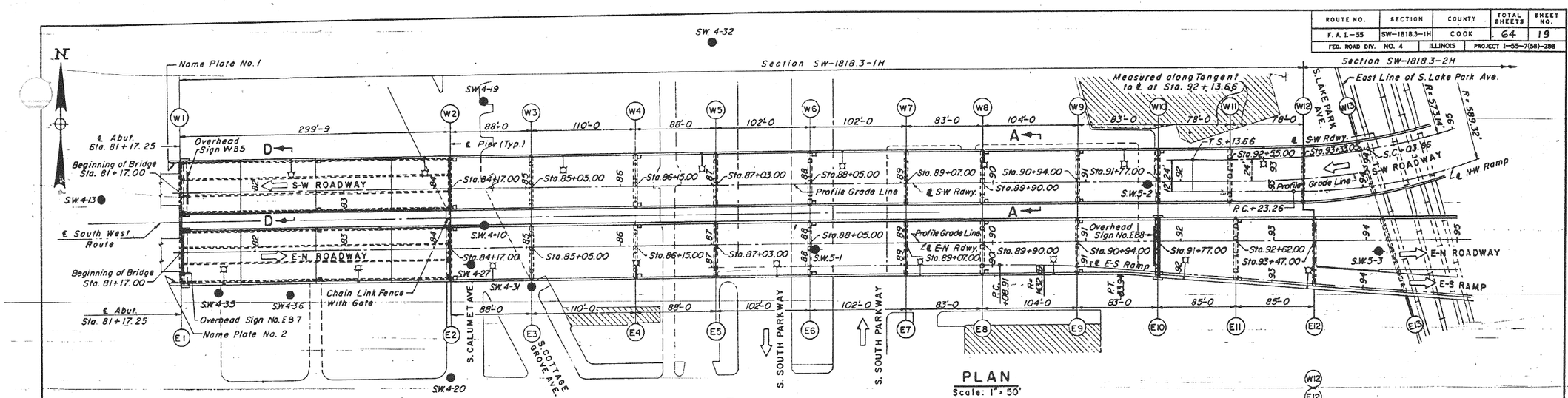

PLAN
Scale: 1" = 50'

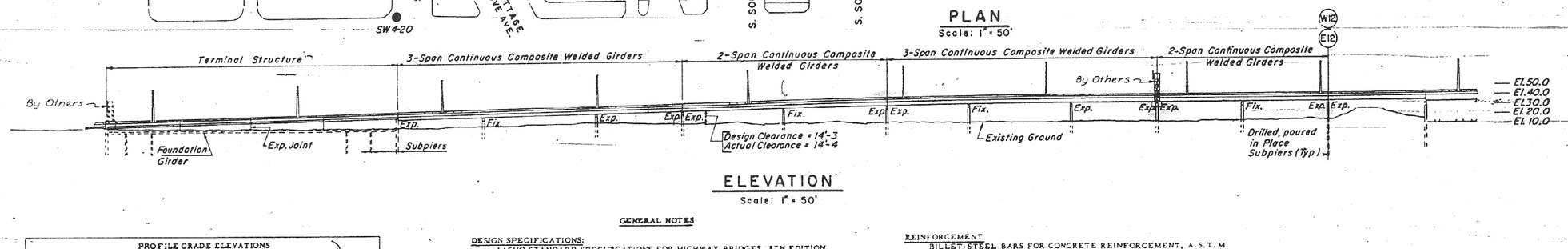

ELEVATION
Scale: 1" = 50'

PROFILE GRADE ELEVATIONS AND COORDINATES OF ℄ INTERSECTIONS WITH ℄ ABUTMENT OR PIER

Reference Line	Profile Grade Elevations	North Coordinate	East Coordinate
℄ Abut W1	19.121	10231.080	15023.795
℄ Pier W2	27.364	10231.358	15323.545
℄ Pier W3	29.784	10231.439	15411.545
℄ Pier W4	32.809	10231.541	15521.544
℄ Pier W5	35.229	10231.622	15609.544
℄ Pier W6	37.962	10231.717	15711.544
℄ Pier W7	40.040	10231.811	15813.544
℄ Pier W8	41.156	10231.888	15896.544
℄ Pier W9	41.865	10231.985	16000.544
℄ Pier W10	42.280	10232.061	16083.544
℄ Pier W11	42.669	10256.242	16161.522
℄ Pier W12	43.052	10258.809	16239.520
℄ Abut E1	19.121	10167.080	15023.854
℄ Pier E2	27.364	10167.358	15323.604
℄ Pier E3	29.784	10167.439	15411.604
℄ Pier E4	32.809	10167.541	15521.604
℄ Pier E5	35.229	10167.622	15609.604
℄ Pier E6	37.962	10167.717	15711.604
℄ Pier E7	40.040	10167.811	15813.604
℄ Pier E8	41.156	10167.888	15896.604
℄ Pier E9	41.865	10167.985	16000.604
℄ Pier E10	42.280	10168.061	16083.604
℄ Pier E11	42.681	10168.140	16168.603
℄ Pier E12	42.880	10168.219	16253.603

DESIGNED BY M.N.
DRAWN BY A.B.
CHECKED BY P.K.
APPROVED BY

GENERAL NOTES

DESIGN SPECIFICATIONS:
AASHO STANDARD SPECIFICATIONS FOR HIGHWAY BRIDGES 8TH EDITION, DATED 1961 AND AASHO-1963 INTERIM SPECIFICATIONS, AND THE LATEST EDITION OF THE AMERICAN WELDING SOCIETY STANDARD SPECIFICATIONS FOR WELDED HIGHWAY AND RAILWAY BRIDGES.

DESIGN LOADING:
AASHO H-S 20-44 AND ALTERNATE LIVE LOAD AS DEFINED IN SECTION 4 (C) OF THE BUREAU OF PUBLIC ROADS POLICY AND PROCEDURE MEMORANDUM 20-4, DATED AUGUST 6, 1956.
DEFLECTION DUE TO LIVE LOAD PLUS IMPACT SHALL NOT EXCEED 1/1200 OF THE SPAN.

FOUNDATIONS:
LATERAL SOIL PRESSURE - 40P. C. F. EQUIVALENT FLUID PRESSURE, DRILLED IN SUB-PIERS ON BEDROCK BEARING 60 TONS PER S. F. MIN.

CONSTRUCTION SPECIFICATIONS:
STANDARD SPECIFICATIONS FOR ROAD AND BRIDGE CONSTRUCTION STATE OF ILLINOIS, DEPARTMENT OF PUBLIC WORKS AND BUILDINGS, DIVISION OF HIGHWAYS, DATED JANUARY 2, 1958 AND SUPPLEMENTAL SPECIFICATIONS EFFECTIVE APRIL 2, 1962.

CONCRETE:

DESIGN STRESSES	$f'c$ = 3,500 P.S.I.	ULTIMATE STRENGTH IN 14 DAYS	
	f_c = 1,400 P.S.I.	CONCRETE WITHOUT EARTH PRESSURE	
	f_c = 1,000 P.S.I.	CONCRETE WITH EARTH PRESSURE	
	n = 10		

ALL CONCRETE SHALL BE CLASS "X".

THE CONCRETE BRIDGE DECK SHALL BE FINISHED BY THE USE OF A FINISHING MACHINE, EXCEPT FOR TERMINAL STRUCTURE.

THE CONCRETE FLOOR SLABS SHALL BE POURED IN ONE CONTINUOUS OPERATION FROM END TO END OF INDIVIDUAL UNITS.

LOCATION OF LONGITUDINAL CONSTRUCTION JOINTS, IF REQUESTED BY THE CONTRACTOR SHALL REQUIRE APPROVAL BY THE ENGINEER.

EXPOSED SURFACES ARE TO BE RUBBED IN ACCORDANCE WITH ARTICLE 52.13 OF THE STANDARD SPECIFICATIONS.

REINFORCEMENT
BILLET-STEEL BARS FOR CONCRETE REINFORCEMENT, A.S.T.M. DESIGNATION A15, OF INTERMEDIATE GRADE OR AXLE-STEEL BARS FOR CONCRETE REINFORCEMENT A.S.T.M. DESIGNATION A160, OF INTERMEDIATE GRADE. SHALL BE USED.

ALLOWABLE TENSILE UNIT STRESS - f_s = 20,000 P.S.I.

BAR BENDING PLACING CLEARANCES ETC. UNLESS OTHERWISE SHOWN, SHALL BE IN ACCORDANCE WITH SECTION 59 OF THE STANDARD SPECIFICATIONS ALL BARS SHALL BE LAPPED NOT LESS THAN 20 DIAMETERS AT SPLICES, UNLESS OTHERWISE SHOWN.

STRUCTURAL STEEL
ALL STRUCTURAL STEEL SHALL CONFORM TO A.S.T.M. DESIGNATION A-36. FOR DETAIL NOTES REFER TO "STRUCTURAL STEEL NOTES" SHEET S-14.

UTILITY LINES:
ALL EXPENSE INVOLVED IN RELOCATING OR INSTALLING THE AFFECTED UTILITY LINES SHALL BE BORNE BY THE OWNERS. THE CONTRACTOR AND OWNER(S) ARE REQUESTED TO COOPERATE BY ARRANGING THEIR WORK IN SUCH A MANNER THAT INCONVENIENCE TO EITHER WILL BE HELD TO A MINIMUM.

NOTES:

PIERS W12 AND E12 ARE CONSTRUCTED UNDER SECTION SW 1818.3-2H. EXPANSION GUARDS, COMPLETE, AT PIERS W12 AND E12 ARE FURNISHED UNDER SECTION SW 1818.3-2H. WEST HALF OF EXPANSION GUARDS SHALL BE INSTALLED UNDER SECTION SW 1818.3-1H. SEE SPECIAL PROVISIONS.

OVERHEAD SIGNS, TRUSSES, AND SUPPORTS ARE FURNISHED AND ERECTED UNDER ANOTHER CONTRACT. ANCHOR BOLTS FOR OVERHEAD SIGN SUPPORTS ARE FURNISHED AND INSTALLED UNDER THIS CONTRACT.

FOR LIMITS OF CLASS A EXCAVATION SEE SHEET NO. S-10
FOR LIMITS OF ROCK EXCAVATION SEE SHEET NO. S-2

□ DENOTES DRAINAGE INLETS.

⌶ DENOTES LIGHT STANDARDS.

CITY OF CHICAGO
DEPARTMENT OF PUBLIC WORKS
BUREAU OF ENGINEERING

SOUTHWEST ROUTE SUPERHIGHWAY
ELEVATED HIGHWAY
S. PRAIRIE AVE. TO S. LAKE PARK AVE.

SECTION SW-1818.3-1H

KEY PLAN

SCALE: AS NOTED
MAR. 1965
SHEET NO. S-1 OF 64 SHEETS

101-60L70_As-Builts.dgn

AECOM

USER NAME = auyeungh	DESIGNED -	REVISED -
	CHECKED -	REVISED -
PLOT SCALE =	DRAWN - HAY	REVISED -
PLOT DATE = 11/11/2014	CHECKED - ATB	REVISED -

STATE OF ILLINOIS
DEPARTMENT OF TRANSPORTATION

AS-BUILTS
SHEET NO. 1 OF 174 SHEETS

F.A.I. RTE.	SECTION	COUNTY	TOTAL SHEETS	SHEET NO.
55	2010-080-B	COOK	886	318
		CONTRACT NO. 60L70		
	ILLINOIS FED. AID PROJECT			

FOR INFORMATION ONLY

ROUTE NO.	SECTION	COUNTY	TOTAL SHEETS	SHEET NO.
F. A. I.—55	SW-1818.3-1H	COOK	64	20
FED. ROAD DIV. NO. 4	ILLINOIS	PROJECT I-55-7(58)-288		

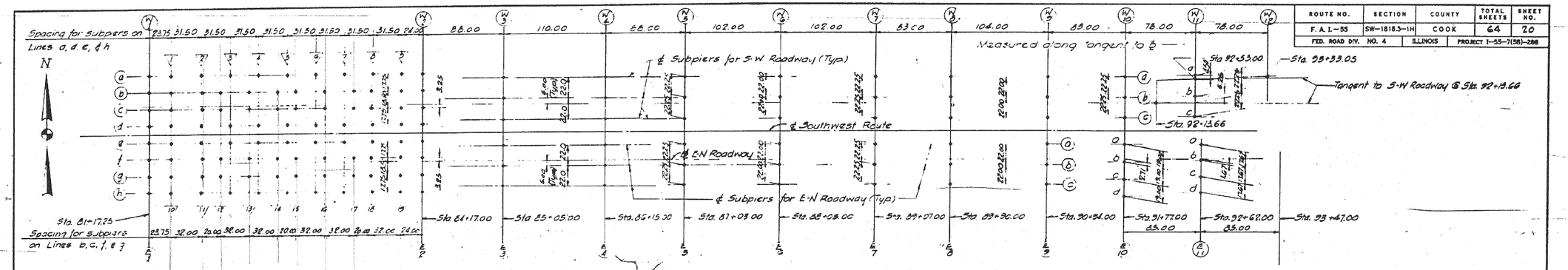

SUBPIER PLAN

Scale 1" = 50'

SUBPIER NOTES:
The Subpier Bottom Elevation shall be adjusted when the true top of rock elevation is established, to provide 1'-0 embedment in Rock. If the top of rock is lower, then the vertical bars shall be extended by lapping an equal number of short bars of the same size using a "20 Diameter lap. Additional Continuous Tie Reinforcement shall be provided to maintain 3" pitch.

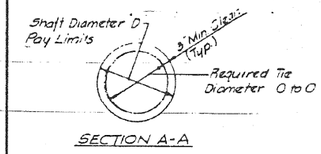

SECTION A-A

NOTES:
The Contractor shall splice Continuous Ties by lapping 1½ turns. The number of splices and their locations are left unspecified. Continuous Tie quantities include allowance for splices at 40 Ft. intervals. Use three spacers (channel, tees or angles) for each Tie assembly, the cost of which shall be incidental to the item "Reinforcement Bars."

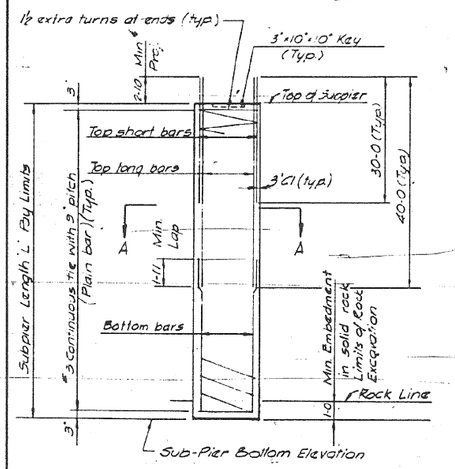

DETAIL OF SUB-PIERS

DESIGNED BY B.H.
DRAWN BY K.
CHECKED BY B.H.
APPROVED BY S.A.

SUBPIER SCHEDULE

Subpier Mark	Diameter	Top Elev.	Bott. Elev.	Length	Reinforcement Bar List: Top Short Bars Mark	No. Req'd	Size	Top Long Bars Mark	No. Req'd	Size	Bottom Bars Mark	No. Req'd	Size	Length
W1- a thru d E1- e thru h a - 1 thru 9 d - 1 thru 9 e - 1 thru 9 h - 1 thru 9	2'-0"	12.0	-45.0	44×57.0	V51	44×4	#7	V55	44×4	#7	V59	16×4	#7	22-0
b -10 g -10	2-6	16.0	-47.0	2×63.0	V52	2×4	#9	V56	2×4	#9	V60	2×4	#9	28-0
c -10 f -10		15.8	-47.2											
b -11 g -11		16.9	-46.1											
c -11 f -11		16.7	-46.3											
b -12 g -12		17.3	-45.7											
c -12 f -12		17.1	-45.9											
b -13 g -13		18.2	-44.8											
c -13 f -13		18.0	-45.0											
b -14 g -14		19.1	-43.9											
c -14 f -14		18.9	-44.1	2×63.0							V60	2×4	#9	28-0
b -15 g -15		19.8	-44.4	2×66.0							V61	2×4	#9	31-0
c -15 f -15		19.4	-46.6											
b -16 g -16		20.5	-45.5											
c -16 f -16		20.3	-45.7											
b -17 g -17		21.4	-44.6											
c -17 f -17		21.2	-44.8											
b -18 g -18		21.9	-44.1											
c -18 f -18		21.7	-44.3											
b -19 g -19		22.8	-43.2											
c -19 f -19	2-6	22.6	-43.4	2×66.0	V52	2×4	#9	V56	2×4	#9	V61	2×4	#9	31-0
W2- a,d E2- e,h	2-0	12.0	-45.0	4×57.0	V51	4×4	7	V55	4×4	#7	V59	4×4	#7	22-0
W2- b,c E2- f,g	2-6	12.0	-43.0	4×57.0	V52	4×4	9	V56	4×4	#9	V62	4×4	#9	22-0
W3 a thru c E3 a thru c	2-9	12.0	-40.0	6×52.0	V54	6×7	#11	V58	6×7	#11	V63	6×7	#9	17-0
W4 a thru c	2-9	12.0	-35.0	3×47.0	V53	3×7	#10	V57	3×7	#10	V64	3×7	#8	12-0
E4 a thru c	2-9	12.0	-40.0	3×52.0	V53	3×7	#10	V57	3×7	#10	V65	3×7	#5	17-0
W5 a thru c	2-6	12.0	-35.0	3×47.0	V54	3×4	11	V58	3×4	#11	V66	3×4	#9	12-0
E5 a thru c	2-6	12.0	-40.0	3×52.0	V54	3×4	#11	V58	3×4	#11	V63	3×4	#9	17-0
W6 a thru c E6 a thru c	3-0	12.0	-40.0	6×52.0	V54	6×6	#11	V58	6×6	#11	V63	6×6	#9	17-0
W7 a thru c E7 a thru c	2-6	11.5	-40.5	6×52.0	V54	6×5	#11	V58	6×5	#11	V63	6×5	#9	17-0
W8 a thru c	3-0	12.0	-40.0	3×52.0	V54	3×6	#11	V58	3×6	#11	V63	3×6	#9	17-0
E8 a thru c	3-0	12.0	-49.0	3×57.0	V54	3×6	#11	V58	3×6	#11	V68	3×6	#9	22-0
W9 a thru c E9 a thru c	2-9	12.0	-45.0	6×57.0	V53	6×6	#10	V57	6×6	#10	V67	6×6	#8	22-0
W10 a thru c	2-6	12.5	-44.5	3×57.0	V52	3×4	#9	V56	3×4	#9	V62	3×4	#9	22-0
E10 a thru d	3-0	12.0	-50.0	4×62.0	V53	4×8	#10	V57	4×8	#10	V68	4×8	#8	27-0
W11 a thru c	2-9	13.0	-49.0	3×62.0	V54	3×6	#11	V58	3×6	#11	V69	3×6	#9	27-0
E11 a thru d	2-6	12.5	-49.5	4×62.0	V54	4×7	#11	V58	4×7	#11	V68	4×7	#9	27-0

CONTINUOUS TIE REINFORCEMENT BAR LIST

SUB-PIER D	REQD. TIE Dia to a	SIZE	
2-0	1-6	#3	
2-6	2-0	#3	
2-9	2-3	#3	
3-0	2-6	#3	

BILL OF MATERIAL

DESCRIPTION	UNIT	AMOUNT
Sub-piers	Cu. Ft.	40,448
Reinforcement	Lbs.	259,038

CITY OF CHICAGO
DEPARTMENT OF PUBLIC WORKS
BUREAU OF ENGINEERING

SOUTHWEST ROUTE SUPERHIGHWAY
ELEVATED HIGHWAY
S. PRAIRIE AVE. TO S. LAKE PARK AVE.
SECTION SW-1818.3-1H

SUBPIER PLAN

SCALE: AS NOTED — MAR. 1966

SHEET NO. S-2 OF 84 SHEETS

102-60L70_As-Builts.dgn

AECOM	USER NAME = auyeungh	DESIGNED -	REVISED -
		CHECKED -	REVISED -
	PLOT SCALE =	DRAWN - HAY	REVISED -
	PLOT DATE = 11/11/2014	CHECKED - ATB	REVISED -

STATE OF ILLINOIS
DEPARTMENT OF TRANSPORTATION

AS-BUILTS

SHEET NO. 2 OF 174 SHEETS

F.A.I. RTE.	SECTION	COUNTY	TOTAL SHEETS	SHEET NO.
55	2010-080-B	COOK	886	319
		CONTRACT NO. 60L70		
	ILLINOIS FED. AID PROJECT			

FOR INFORMATION ONLY

ROUTE NO.	SECTION	COUNTY	TOTAL SHEETS	SHEET NO.
F.A.I.-55	SW-1818.3-1H	COOK	64	21
FED. ROAD DIV. NO. 4	ILLINOIS	PROJECT I-55-7(58)-288		

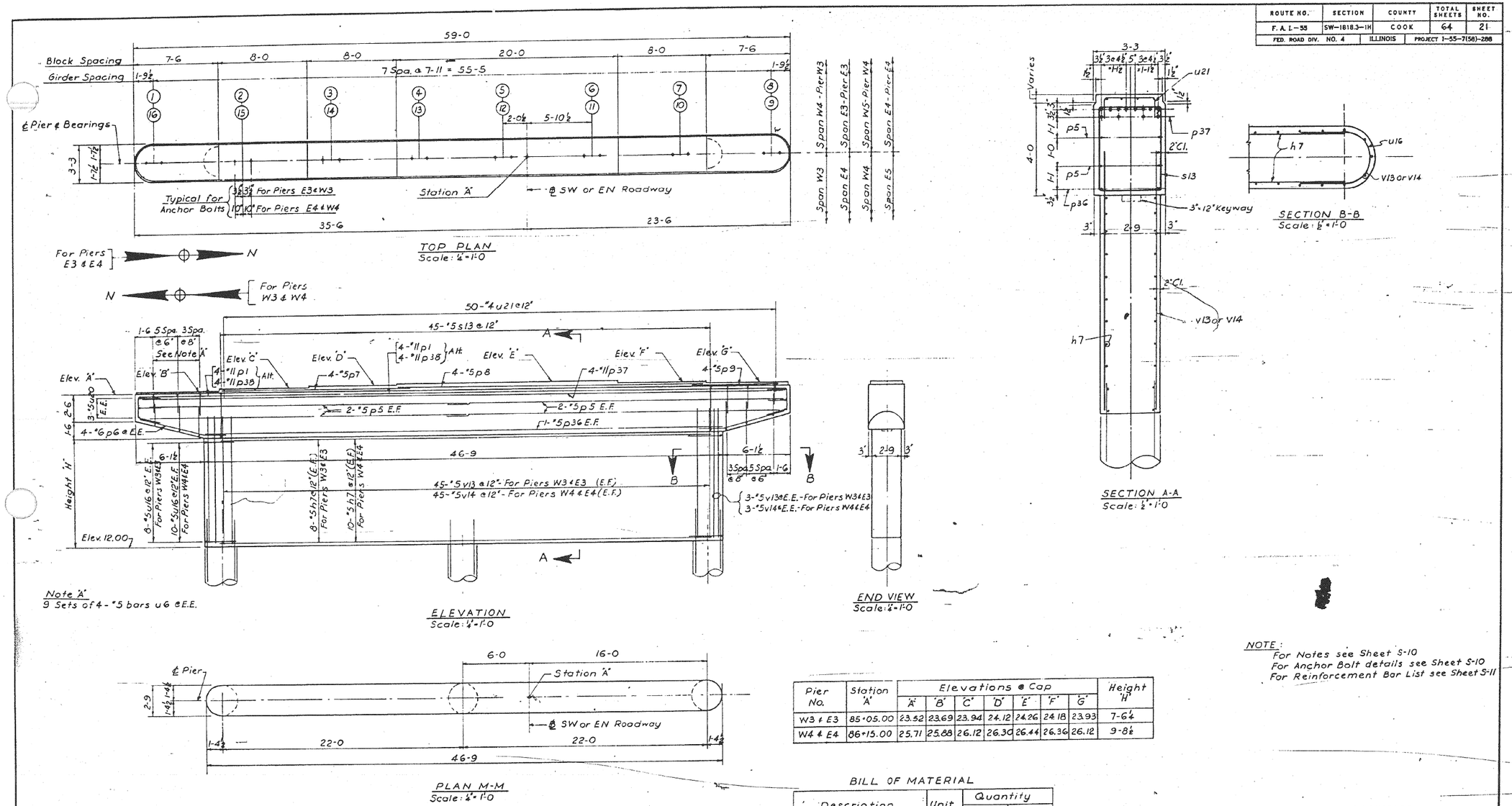

Pier No.	Station "A"	Elevations @ Cap "A"	"B"	"C"	"D"	"E"	"F"	"G"	Height "H"
W3 & E3	85+05.00	23.52	23.69	23.94	24.12	24.26	24.18	23.93	7-6¼
W4 & E4	86+15.00	25.71	25.88	26.12	26.30	26.44	26.36	26.12	9-8½

BILL OF MATERIAL

Description	Unit	Quantity W3 or E3	Quantity W4 or E4
Class "X" Concrete	Cu.Yds.	66.9	76.6
Reinforcement Bars	Lbs.	7,620	8,072
Class "A" Excavation for Structures	Cu.Yds.	16.0	25.0

NOTE:
For Notes see Sheet S-10
For Anchor Bolt details see Sheet S-10
For Reinforcement Bar List see Sheet S-11

CITY OF CHICAGO
DEPARTMENT OF PUBLIC WORKS
BUREAU OF ENGINEERING
SOUTHWEST ROUTE SUPERHIGHWAY
ELEVATED HIGHWAY
S. PRAIRIE AVE. TO S. LAKE PARK AVE.
SECTION SW-1818.3-1H
PIERS W3, W4, E3 AND E4
SCALE: AS NOTED MAR. 1965
SHEET NO. S-3 OF 64 SHEETS

...NED BY B.B.
...WN BY K.M.
CHECKED BY V.B.
APPROVED BY K.A.

103-60L70_As-Builts.dgn

AECOM

USER NAME = auyeungh	DESIGNED -	REVISED -
	CHECKED -	REVISED -
PLOT SCALE =	DRAWN - HAY	REVISED -
PLOT DATE = 11/11/2014	CHECKED - ATB	REVISED -

STATE OF ILLINOIS
DEPARTMENT OF TRANSPORTATION

AS-BUILTS

SHEET NO. 3 OF 174 SHEETS

F.A.I. RTE.	SECTION	COUNTY	TOTAL SHEETS	SHEET NO.
55	2010-080-B	COOK	886	320

CONTRACT NO. 60L70

ILLINOIS FED. AID PROJECT

FOR INFORMATION ONLY

ROUTE NO.	SECTION	COUNTY	TOTAL SHEETS	SHEET NO.
F. A. I.-55	SW-1818.3-1H	COOK	64	22
FED. ROAD DIV. NO. 4	ILLINOIS	PROJECT I-55-7(58)-286		

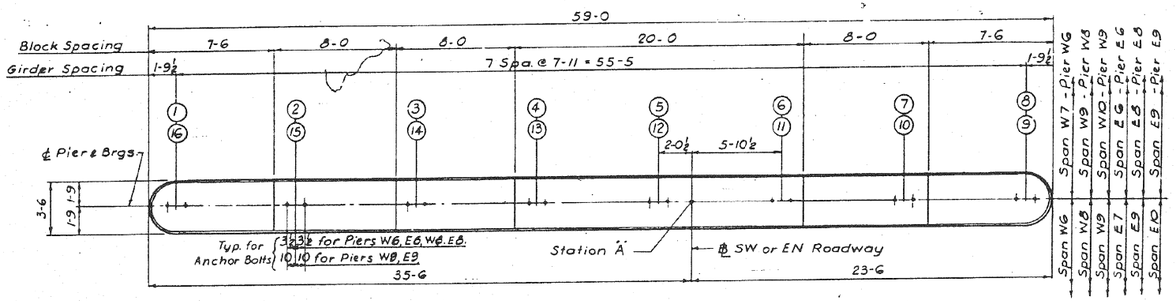

TOP PLAN
Scale ¼"=1-0

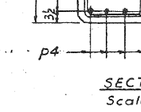

SECTION A-A
Scale ¾"=1-0

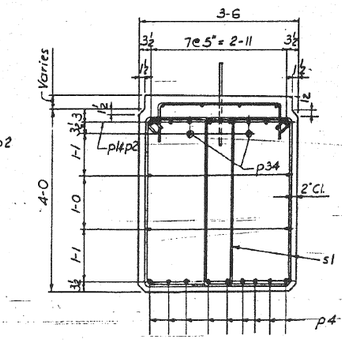

SECTION B-B
Scale ¾"=1-0

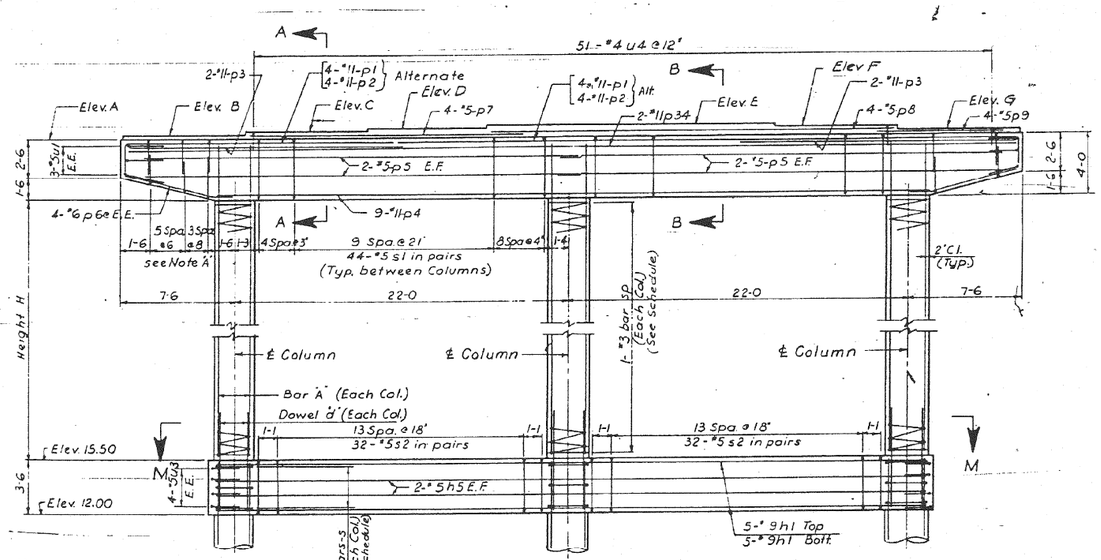

ELEVATION
Scale ¼"=1-0

Note 'A'
9 sets of 4 - "5 bars u2 E.E.

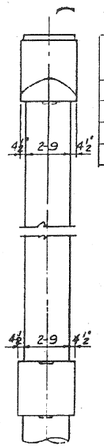

END VIEW
Scale ¼"=1-0

Pier No.	Station 'A'	Elevations @ Cap							Column				
		A	B	C	D	E	F	G	Height 'H'	Bar 'A'	Dowel 'd'	#3 bar-sp	Bar-S
W6 & E6	88+05.00	31.60	31.78	32.03	32.81	32.35	32.87	32.02	12-1½	12-"11 u4	12-"11 d1	sp 4	s3
W8 & E8	89+90.00	34.83	35.00	35.25	35.43	35.57	35.49	35.24	15-4	12-"11 u6	12-"11 d1	sp 6	s3
W9	90+34.00	34.75	34.93	35.18	35.36	35.50	35.42	35.17	15-3	12-"11 u6	12-"11 d1	sp 6	s15
E9	90+34.00	34.87	35.04	35.20	35.36	35.50	35.42	35.17	15-4½	12-"11 u6	12-"11 d1	sp 6	s15

BILL OF MATERIAL

DESCRIPTION	UNIT	QUANTITY			
		W6 or E6	W8 or E8	W9 or E9	
Class 'X' Concrete	Cu. Yds.	62.3	64.3	64.3	
Reinforcement Bars	Lbs.	15,730	17,216	16,383	
			W8	E8	W9	E9
Class 'A' Excavation for Structures	Cu. Yds.	25.0	23.0	20.0	22.0	22.0

NOTE:
For additional pier sections and notes see Sheet No. S-10
For Anchor Bolt details see Sheet No. S-10
For Reinforcement Bar List see Sheet No. S-11

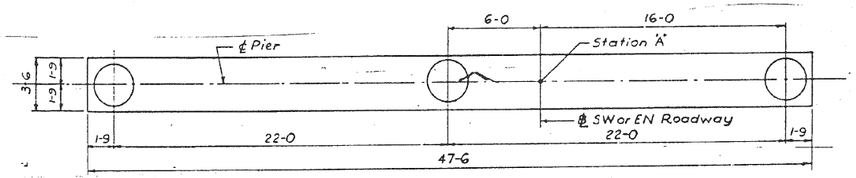

PLAN M-M
Scale ¼"=1-0

DESIGNED BY B.H.
DRAWN BY B.S.
CHECKED BY L.W.
APPROVED BY K.A.

CITY OF CHICAGO
DEPARTMENT OF PUBLIC WORKS
BUREAU OF ENGINEERING

SOUTHWEST ROUTE SUPERHIGHWAY
ELEVATED HIGHWAY
S PRAIRIE AVE. TO S. LAKE PARK AVE.
SECTION SW-1818.3-1H
PIERS W6, W8, W9, E6, E8, E9,
SCALE: AS NOTED
MAR. 1965
SHEET NO. S-4 OF 64 SHEETS

104-60L70_As-Builts.dgn

AECOM

USER NAME = auyeungh	DESIGNED -	REVISED -
	CHECKED -	REVISED -
PLOT SCALE =	DRAWN - HAY	REVISED -
PLOT DATE = 11/11/2014	CHECKED - ATB	REVISED -

STATE OF ILLINOIS
DEPARTMENT OF TRANSPORTATION

AS-BUILTS
SHEET NO. 4 OF 174 SHEETS

F.A.I. RTE.	SECTION	COUNTY	TOTAL SHEETS	SHEET NO.
55	2010-080-B	COOK	886	321
		CONTRACT NO. 60L70		
	ILLINOIS FED. AID PROJECT			

FOR INFORMATION ONLY

ROUTE NO.	SECTION	COUNTY	TOTAL SHEETS	SHEET NO.
F. A. I.–55	SW–1818.3–1H	COOK	64	25
FED. ROAD DIV. NO. 4	ILLINOIS	PROJECT I–55–7(58)–288		

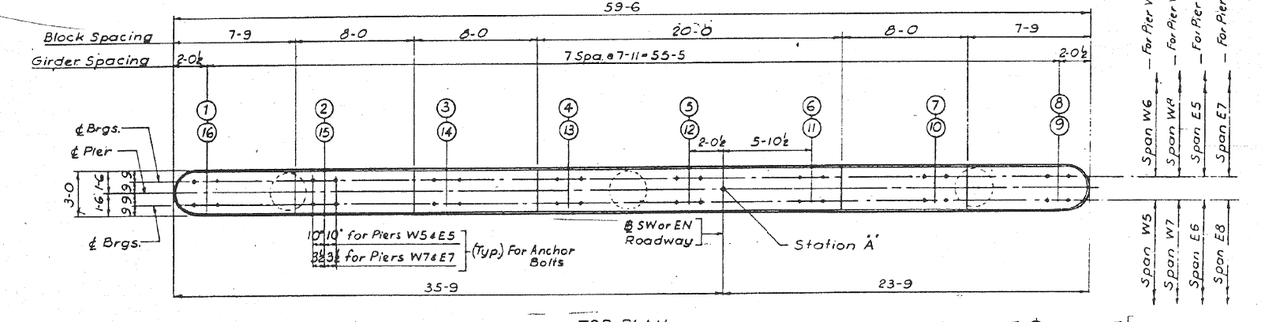

TOP PLAN
Scale ¼"=1'-0

N ⊕ For Piers W5 & W7

For Piers E5 & E7 ⊕ N

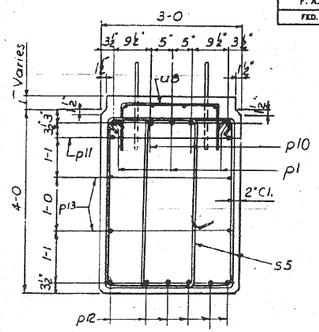

SECTION A-A
Scale ¾"=1'-0

Pier No.	Station 'A'	Elevations @ Cap A	B	C	D	E	F	G	Elev. H	Column Height H	Bar-A	Dowel-d	Spiral-sp
W5 or E5	87+03.00	28.27	28.44	28.69	28.57	29.01	28.93	29.46	12.00	8-9¼	8-#10 v3	8-#10 d2	sp3
W7 or E7	89+07.00	33.89	34.06	34.31	34.43	34.63	34.55	34.90	11.50	14+10¾	10-#10 v5	10-#10 d2	sp5

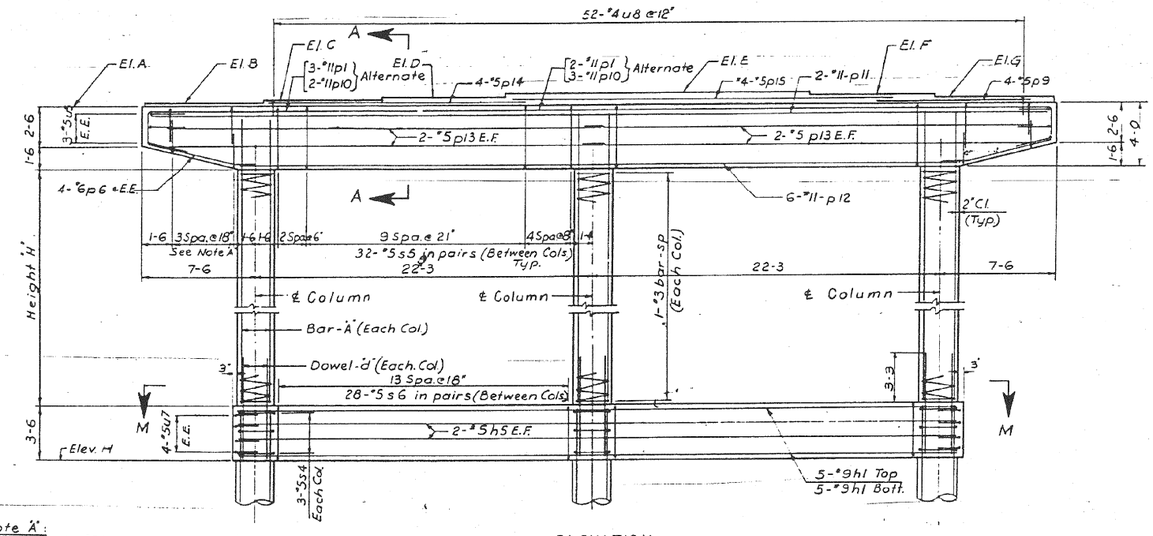

Note 'A':
4 Sets of 4-#5 bars u6 E.E.

ELEVATION
Scale ¼"=1'-0

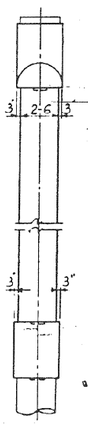

END VIEW
Scale ¼"=1'-0

BILL OF MATERIAL

DESCRIPTION	UNIT	QUANTITY Pier W5	Pier E5	Pier W7	Pier E7
Class 'X' Concrete	Cu. Yds.	51.5	51.5	54.8	54.8
Reinforcement Bars	Lbs.	10,150	10,150	11,535	11,535
Class 'A' Excavation for Structures	Cu. Yds.	19.0	20.0	22.0	22.0

NOTE:
For additional pier sections and notes see Sheet No. S-10
For Anchor Bolt details see Sheet No. S-10
For Reinforcing Bar list see Sheet No. S-11

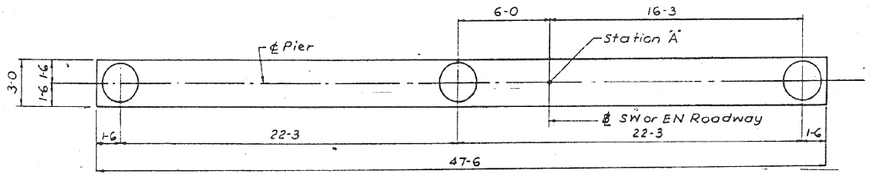

PLAN M-M
Scale ¼"=1'-0

DESIGNED BY B.H.
DRAWN BY B.B.
CHECKED BY L.N.
APPROVED BY K.A.

CITY OF CHICAGO
DEPARTMENT OF PUBLIC WORKS
BUREAU OF ENGINEERING
SOUTHWEST ROUTE SUPERHIGHWAY
ELEVATED HIGHWAY
S. PRAIRIE AVE. TO S. LAKE PARK AVE.
SECTION SW–1818.3–1H
PIERS W5, W7, E5 AND E7
SCALE: AS NOTED MAR. 1965
SHEET NO. S-5 OF 64 SHEETS

105-60L70_As-Builts.dgn

AECOM

USER NAME = auyeungh	DESIGNED -	REVISED -
	CHECKED -	REVISED -
PLOT SCALE =	DRAWN - HAY	REVISED -
PLOT DATE = 11/11/2014	CHECKED - ATB	REVISED -

STATE OF ILLINOIS
DEPARTMENT OF TRANSPORTATION

AS–BUILTS
SHEET NO. 5 OF 174 SHEETS

F.A.I. RTE.	SECTION	COUNTY	TOTAL SHEETS	SHEET NO.
55	2010-080-B	COOK	886	322
		CONTRACT NO. 60L70		
	ILLINOIS	FED. AID PROJECT		

FOR INFORMATION ONLY

ROUTE NO.	SECTION	COUNTY	TOTAL SHEETS	SHEET NO.
F. A. I.–55	SW–1818.3–1H	COOK	64	24
FED. ROAD DIV. NO. 4	ILLINOIS	PROJECT I–55–7(58)–288		

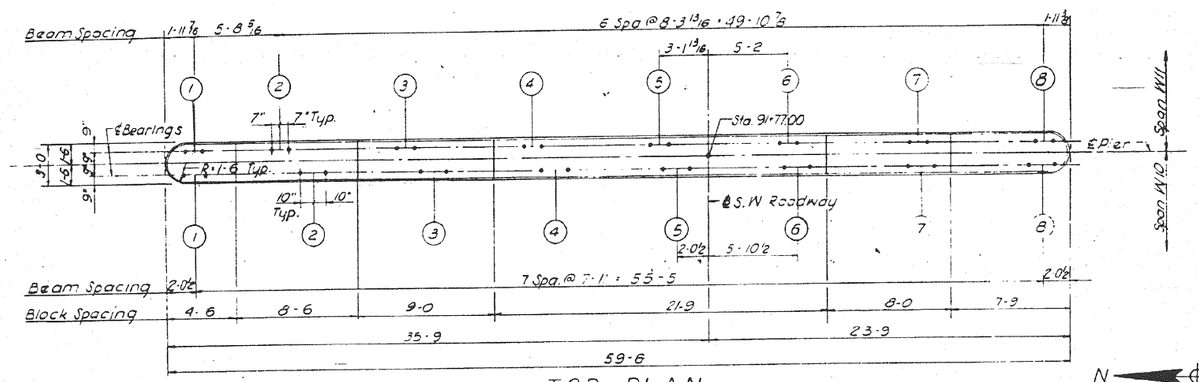

TOP PLAN
Scale : 1/4" = 1'-0"

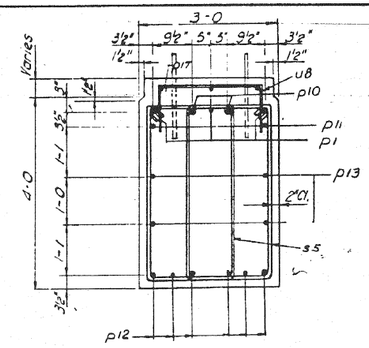

SECTION A-A
Scale 3/4" = 1'-0"

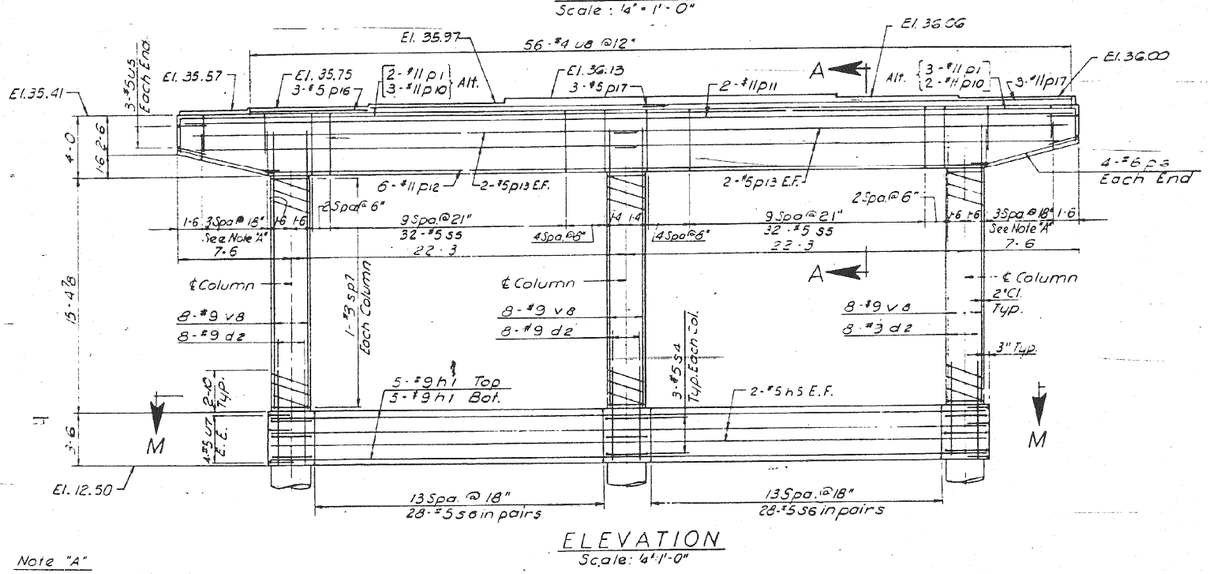

ELEVATION
Scale: 1/4"=1'-0"

Note "A"
4 sets of 4-#5 bars U6.

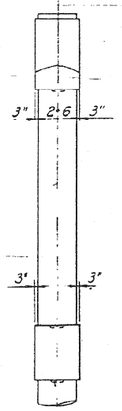

END VIEW
Scale: 1/4"=1'-0"

BILL OF MATERIAL

DESCRIPTION	UNIT	QUANTITY
Class 'X' Concrete	Cu. Yds.	55.1
Reinforcement Bars	Lbs.	10,227
Class 'A' Excavation for Structures	Cu. Yds.	23.0

Notes:
For additional Pier sections and notes see Sheet No. S-10
For Anchor Bolt details see Sheet No. S-10.
For Reinforcing Bar list see Sheet No. S-11.

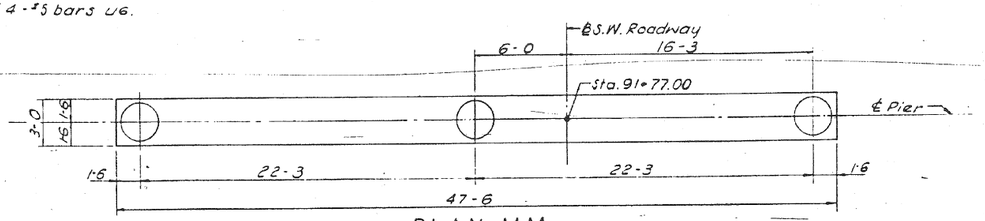

PLAN M-M
Scale: 1/4"=1'-0"

DESIGNED BY B.H.
DRAWN BY —.H.
CHECKED BY L.N.
APPROVED BY K.A.

CITY OF CHICAGO
DEPARTMENT OF PUBLIC WORKS
BUREAU OF ENGINEERING
SOUTHWEST ROUTE SUPERHIGHWAY
ELEVATED HIGHWAY
S. PRAIRIE AVE. TO S. LAKE PARK AVE.
SECTION SW–1818.3–1H
PIER W10
SCALE: AS NOTED MAR. 1965
SHEET NO. S-6 OF 84 SHEETS

106-60L70_As-Builts.dgn

AECOM	USER NAME = auyeungh	DESIGNED -	REVISED -
		CHECKED -	REVISED -
	PLOT SCALE =	DRAWN - HAY	REVISED -
	PLOT DATE = 11/11/2014	CHECKED - ATB	REVISED -

STATE OF ILLINOIS
DEPARTMENT OF TRANSPORTATION

AS–BUILTS
SHEET NO. 6 OF 174 SHEETS

F.A.I. RTE.	SECTION	COUNTY	TOTAL SHEETS	SHEET NO.
55	2010-080-B	COOK	886	323
		CONTRACT NO. 60L70		
	ILLINOIS	FED. AID PROJECT		

FOR INFORMATION ONLY

ROUTE NO.	SECTION	COUNTY	TOTAL SHEETS	SHEET NO.
F. A. I.-55	SW-1818.3-1H	COOK	64	25
FED. ROAD DIV. NO. 4	ILLINOIS	PROJECT I-55-7(56)-288		

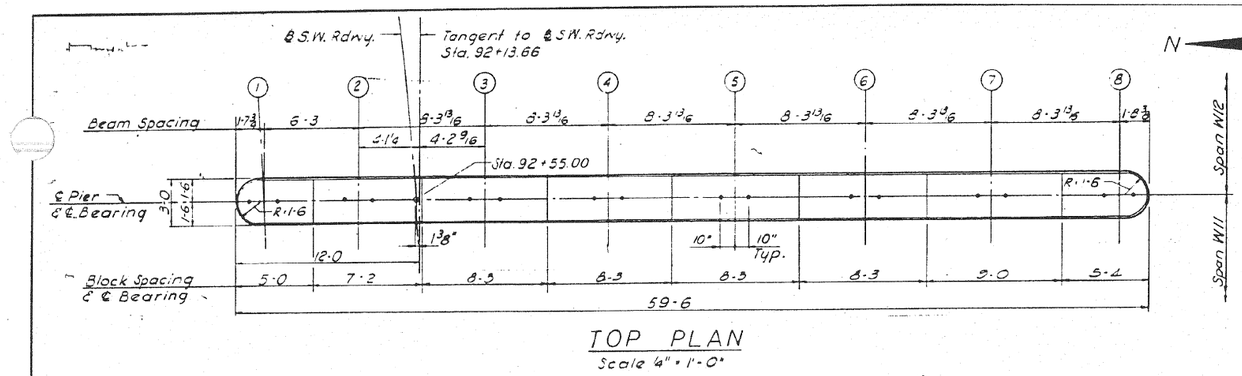

TOP PLAN
Scale 4" = 1'-0"

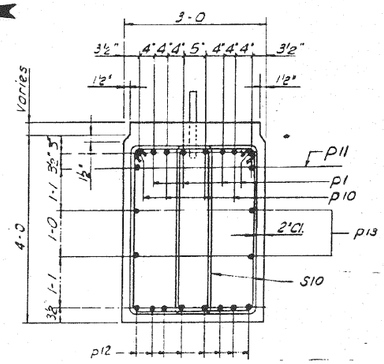

SECTION A A
Scale 3/4" = 1'-0"

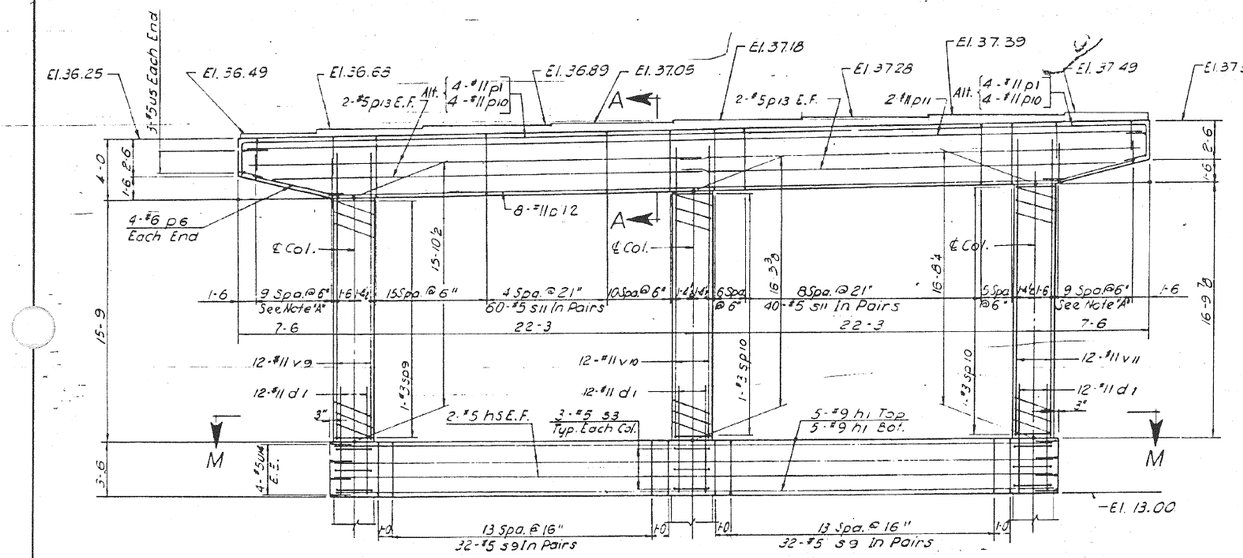

ELEVATION
Scale: 1/4"=1'-0"

Note A:
10 sets of 4-#5 bars u9

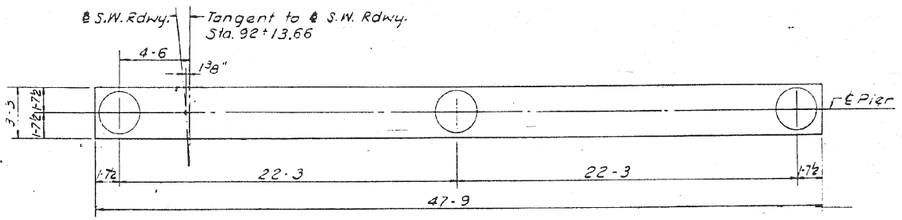

PLAN M-M
Scale 1/4"=1'-0"

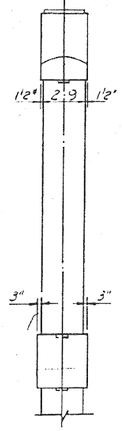

END VIEW
Scale 1/4"=1'-0"

BILL OF MATERIAL

DESCRIPTION	UNIT	QUANTITY
Class 'X' Concrete	Cu. Yds.	57.9
Reinforcement Bars	Lbs.	15,164
Class 'A' Excavation for Structures	Cu. Yds.	22.0

Notes:
For additional Pier sections and Notes see Sheet No. S-10.
For Anchor Bolt details see Sheet No. S-10.
For Reinforcing Bar List see Sheet No. S-11.

DESIGNED BY B.H.
DRAWN BY I.M.
CHECKED BY L.W.
APPROVED BY K.A.

CITY OF CHICAGO
DEPARTMENT OF PUBLIC WORKS
BUREAU OF ENGINEERING

SOUTHWEST ROUTE SUPERHIGHWAY
ELEVATED HIGHWAY
S. PRAIRIE AVE. TO S. LAKE PARK AVE.
SECTION SW-1818.3-1H

PIER W11

SCALE: AS NOTED · MAR. 1965
SHEET NO. S-7 OF 64 SHEETS

107-60L70_As-Builts.dgn

AECOM	USER NAME = auyeungh	DESIGNED -	REVISED -
		CHECKED -	REVISED -
	PLOT SCALE =	DRAWN - HAY	REVISED -
	PLOT DATE = 11/11/2014	CHECKED - ATB	REVISED -

STATE OF ILLINOIS
DEPARTMENT OF TRANSPORTATION

AS-BUILTS
SHEET NO. 7 OF 174 SHEETS

F.A.I. RTE.	SECTION	COUNTY	TOTAL SHEETS	SHEET NO.
55	2010-080-B	COOK	886	324
		CONTRACT NO. 60L70		
		ILLINOIS FED. AID PROJECT		

FOR INFORMATION ONLY

ROUTE NO.	SECTION	COUNTY	TOTAL SHEETS	SHEET NO.
F. A. I. – 55	SW–1818.3–1H	COOK	64	26
FED. ROAD DIV. NO. 4	ILLINOIS	PROJECT I–55–7(58)–288		

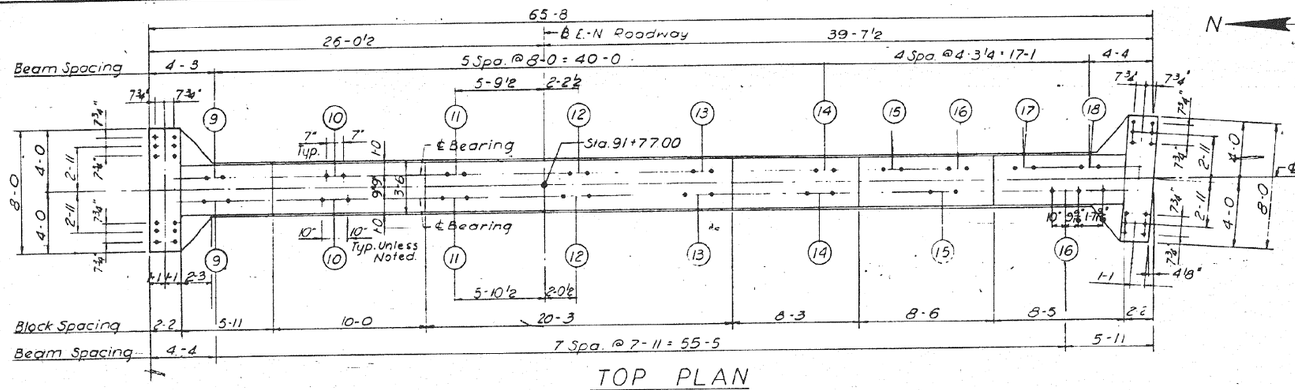

TOP PLAN
Scale: 4" = 1'-0"

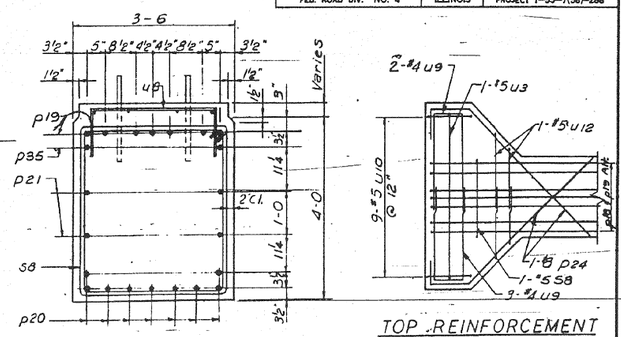

SECTION A-A
Scale: ¾" = 1'-0"

TOP REINFORCEMENT

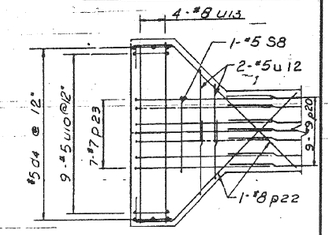

BOTTOM REINFORCEMENT

PART PLANS
Scale: ½" = 1'-0"

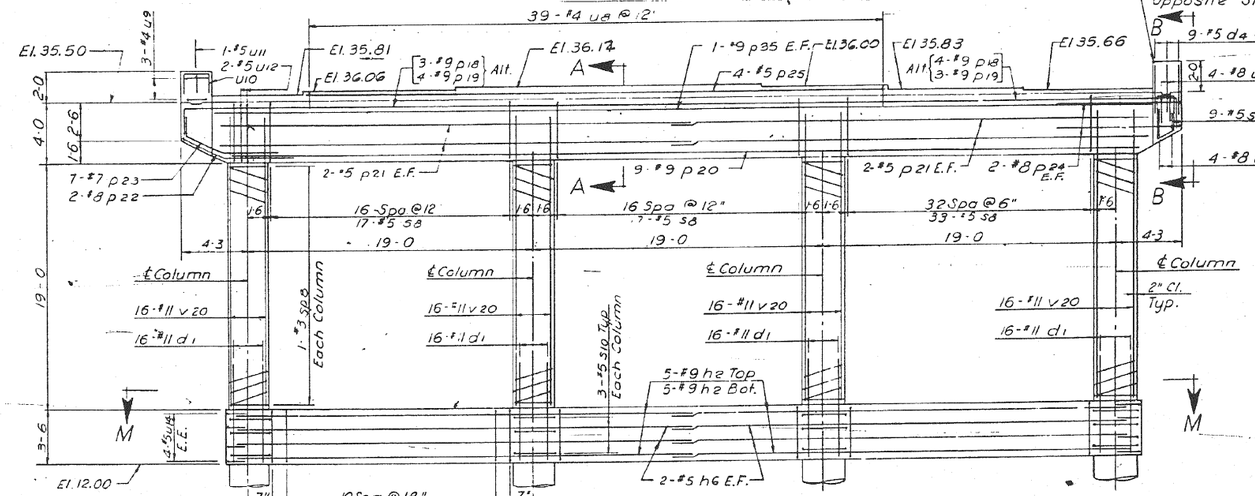

ELEVATION
Scale: ¼" = 1'-0"

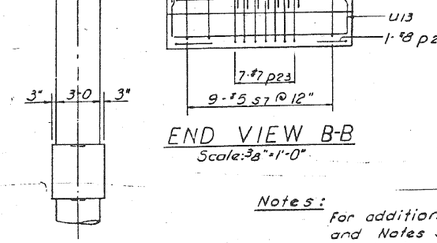

END VIEW
Scale: ¼" = 1'-0"

END VIEW B-B
Scale: ⅜" = 1'-0"

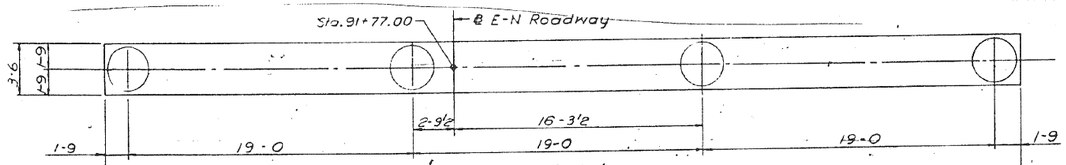

PLAN M-M
Scale: ¼" = 1'-0"

Notes:
For additional Pier sections and Notes see Sheet No. S-10.
for Anchor Bolt details see Sheet No. S-10
For Reinforcing Bar List see Sheet No. S-11.
For Anchor Bolt details for Sign see Sheet No. S-18.

BILL OF MATERIAL

DESCRIPTION	UNIT	QUANTITY
Class 'X' Concrete	Cu. Yds.	91.5
Reinforcement Bars	Lbs.	21,713
Class 'A' Excavation for Structures	Cu. Yds.	300

DESIGNED BY B.H.
DRAWN BY I.M.
CHECKED BY L.W.
APPROVED BY K.A.

CITY OF CHICAGO
DEPARTMENT OF PUBLIC WORKS
BUREAU OF ENGINEERING

SOUTHWEST ROUTE SUPERHIGHWAY
ELEVATED HIGHWAY
S. PRAIRIE AVE. TO S. LAKE PARK AVE.
SECTION SW–1818.3–1H

PIER E10

SCALE: AS NOTED
MAR, 1965
SHEET NO. S-8 OF 64 SHEETS

108-60L70_As-Builts.dgn

AECOM

USER NAME = auyeungh	DESIGNED -	REVISED -
	CHECKED -	REVISED -
PLOT SCALE =	DRAWN - HAY	REVISED -
PLOT DATE = 11/11/2014	CHECKED - ATB	REVISED -

STATE OF ILLINOIS
DEPARTMENT OF TRANSPORTATION

AS–BUILTS
SHEET NO. 8 OF 174 SHEETS

F.A.I. RTE.	SECTION	COUNTY	TOTAL SHEETS	SHEET NO.
55	2010-080-B	COOK	886	325
		CONTRACT NO. 60L70		
	ILLINOIS FED. AID PROJECT			

FOR INFORMATION ONLY

ROUTE NO.	SECTION	COUNTY	TOTAL SHEETS	SHEET NO.
F.A.I.—55	SW—1818.3—1H	COOK	64	27
FED. ROAD DIV. NO. 4	ILLINOIS	PROJECT I—55—7(58)—288		

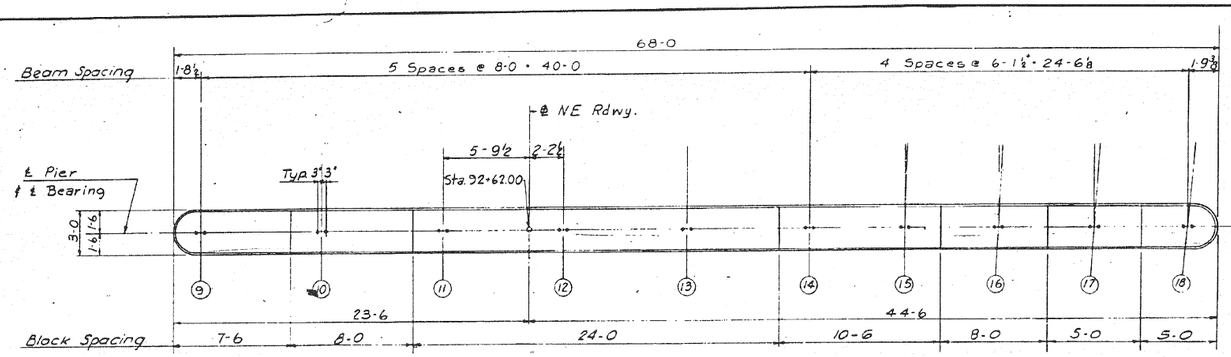

TOP PLAN
Scale: 4"=1'-0"

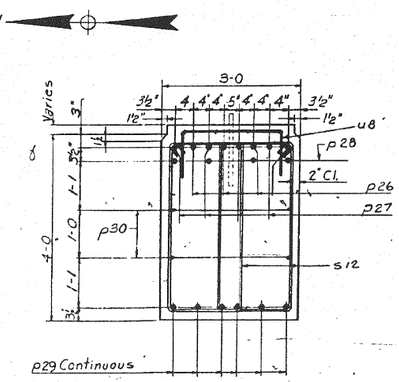

SECTION A-A
Scale: ¾"=1'-0"

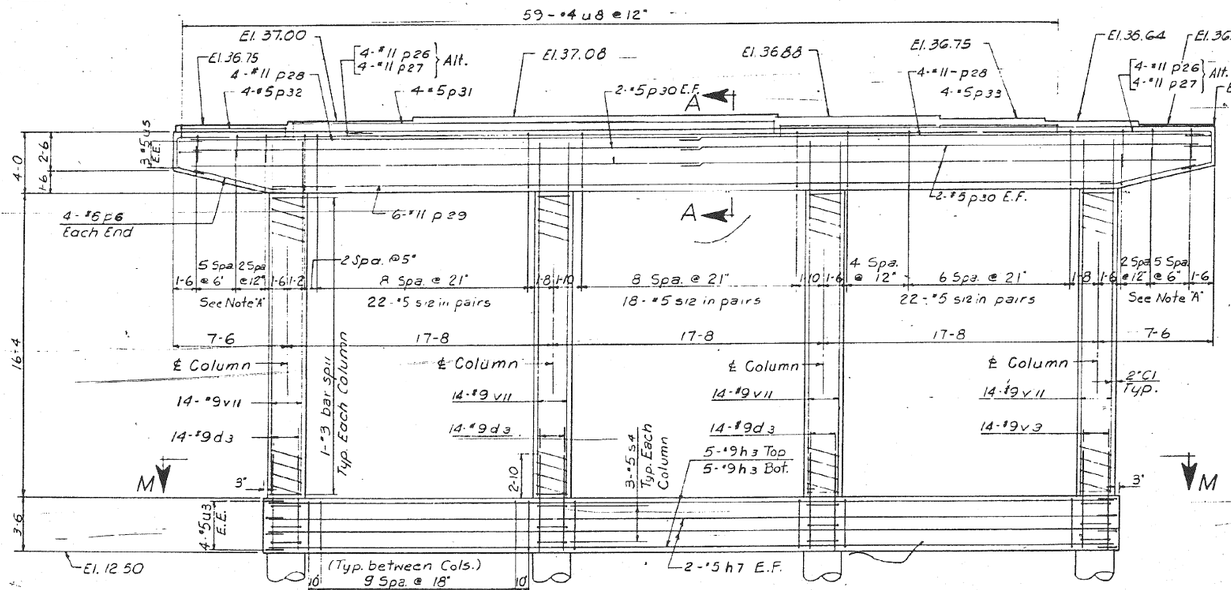

ELEVATION
Scale: 4"=1'-0"

Note 'A':
8 sets of 4-#5 bars u15

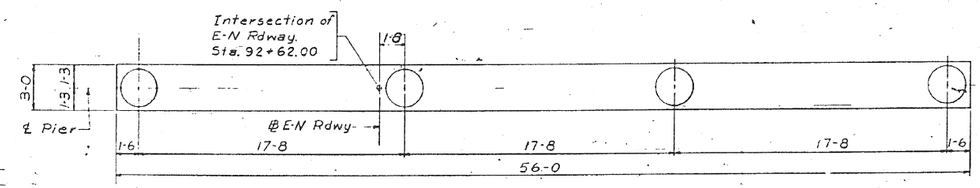

PLAN M-M
Scale: 4"=1'-0"

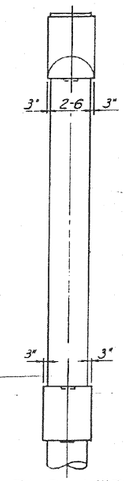

END VIEW
Scale: 4"=1'-0"

BILL OF MATERIAL

DESCRIPTION	UNIT	QUANTITY
Class 'X' Concrete	Cu.Yds.	66.1
Reinforcement Bars	Lbs.	16,469
Class 'A' Excavation for Structures	Cu.Yds.	24.0

Notes:
For additional Pier sections and Notes see Sheet No. S-10
For Anchor Bolt details see Sheet No. S-10.
For Reinforcing Bar List see Sheet No. S-11

DESIGNED BY B.H.
DRAWN BY L.W.
CHECKED BY L.W.
APPROVED BY R.A.

CITY OF CHICAGO
DEPARTMENT OF PUBLIC WORKS
BUREAU OF ENGINEERING

SOUTHWEST ROUTE SUPERHIGHWAY
ELEVATED HIGHWAY
S. PRAIRIE AVE. TO S. LAKE PARK AVE.
SECTION SW-1818.3-1H

PIER E11

SCALE: AS NOTED MAR. 1965
SHEET NO. S-9 OF 64 SHEETS

109-60L70_As-Builts.dgn

AECOM	USER NAME = auyeungh	DESIGNED -	REVISED -	STATE OF ILLINOIS DEPARTMENT OF TRANSPORTATION
		CHECKED -	REVISED -	
	PLOT SCALE =	DRAWN - HAY	REVISED -	
	PLOT DATE = 11/11/2014	CHECKED - ATB	REVISED -	

AS-BUILTS
SHEET NO. 9 OF 174 SHEETS

F.A.I. RTE.	SECTION	COUNTY	TOTAL SHEETS	SHEET NO.
55	2010-080-B	COOK	886	326
		CONTRACT NO. 60L70		
	ILLINOIS FED. AID PROJECT			

FOR INFORMATION ONLY

ROUTE NO.	SECTION	COUNTY	TOTAL SHEETS	SHEET NO.
F. A. L-55	SW-1818.3-1H	COOK	64	28
FED. ROAD DIV. NO. 4	ILLINOIS	PROJECT I-55-7(98)-288		

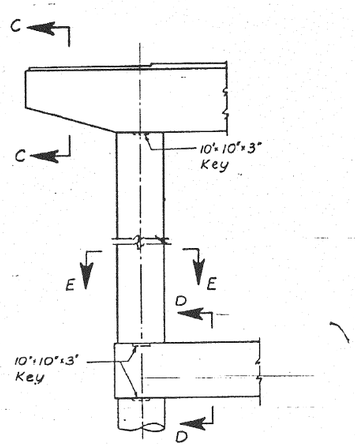

PARTIAL ELEVATION OF PIER

Typical Except for Piers W3, W4, E3, E4

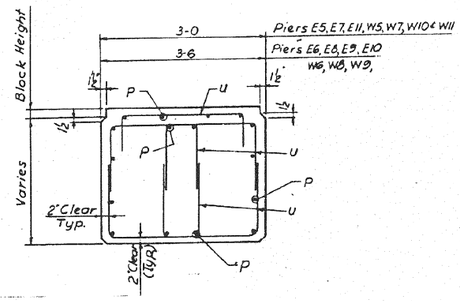

SECTION C-C

TYPICAL CANTILEVER REINFORCEMENT

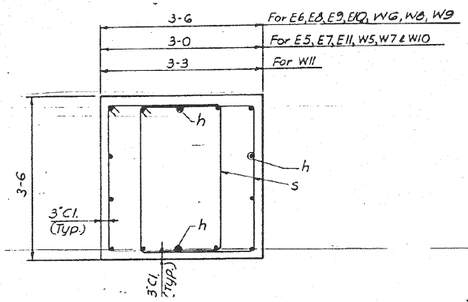

SECTION D-D

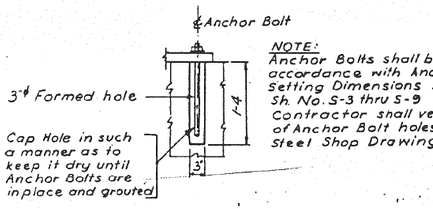

NOTE:
Anchor Bolts shall be set in accordance with Anchor Bolt Setting Dimensions shown on Sh. No. S-3 thru S-9 Contractor shall verify location of Anchor Bolt holes with Structural Steel Shop Drawings.

ANCHOR BOLT SETTING DETAIL

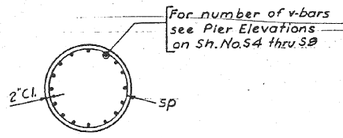

SECTION E-E

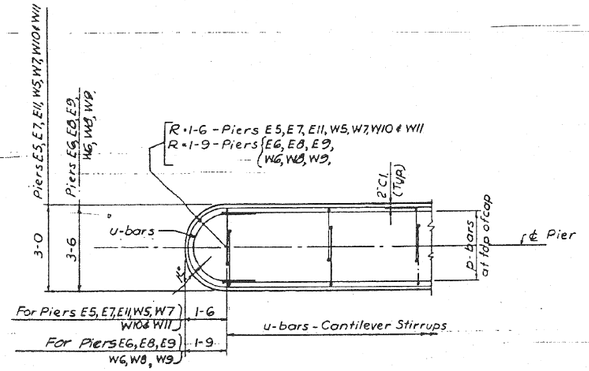

TYPICAL END DETAIL OF PIER CAP

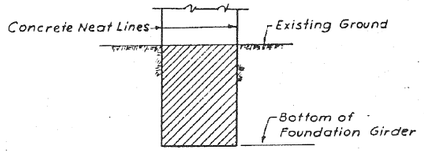

PAY LIMITS

Class 'A' Excavations for Structures

NOTES:
1. Bearing Blocks to be poured monolithic with pier cap.
2. Adjust stirrup spacing to avoid interference with Anchor Bolt forms.
3. For reinforcement bar lists see Sheet S-11
4. Use 20 bar diameters as minimum lap for reinforcement unless otherwise shown or noted.
5. E.E. indicates Each End.
6. E.F. indicates Each Face.
7. All corners shall be chamfered 1" unless otherwise shown or noted.

DESIGNED BY B.H.
DRAWN BY D.D.
CHECKED BY L.W.
APPROVED BY K.A.

CITY OF CHICAGO
DEPARTMENT OF PUBLIC WORKS
BUREAU OF ENGINEERING

SOUTHWEST ROUTE SUPERHIGHWAY
ELEVATED HIGHWAY
S. PRAIRIE AVE. TO S. LAKE PARK AVE.
SECTION SW-1818.3-1H

COMMON PIER DETAILS

SCALE: AS NOTED MAR. 1965
SHEET NO. S-10 OF 64 SHEETS

110-60L70_As-Builts.dgn

AECOM

USER NAME = auyeungh	DESIGNED -	REVISED -	
	CHECKED -	REVISED -	
PLOT SCALE =	DRAWN - HAY	REVISED -	
PLOT DATE = 11/11/2014	CHECKED - ATB	REVISED -	

STATE OF ILLINOIS
DEPARTMENT OF TRANSPORTATION

AS-BUILTS

SHEET NO. 10 OF 174 SHEETS

F.A.I. RTE.	SECTION	COUNTY	TOTAL SHEETS	SHEET NO.
55	2010-080-B	COOK	886	327
		CONTRACT NO. 60L70		
	ILLINOIS FED. AID PROJECT			

FOR INFORMATION ONLY

ROUTE NO.	SECTION	COUNTY	TOTAL SHEETS	SHEET NO.
F. A. I.–55	SW–1818.3–1H	COOK	64	50
FED. ROAD DIV. NO. 4	ILLINOIS	PROJECT I–55–7(58)–288		

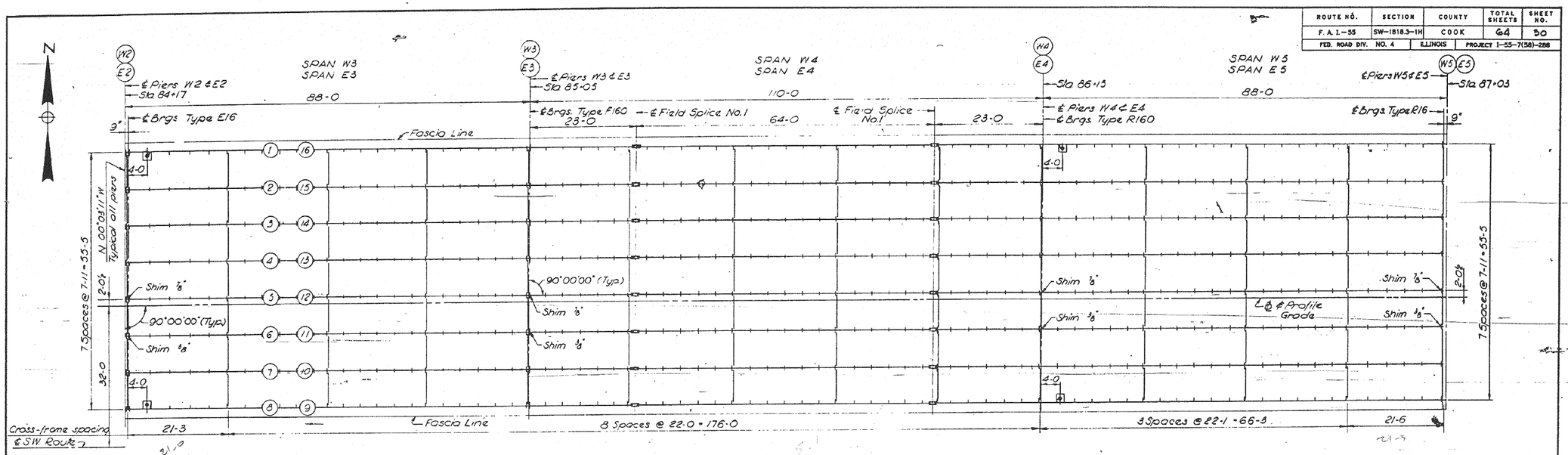

NOTES:

Intermediate stiffeners between cross-frames shall be equally spaced as shown, but not to exceed depth of web plate.

⊡ – Denotes Floor Drain location. For Details see Sheet No. G-13 & G-14

For Structural Steel Notes and Girder Location Plan see Sheet No. S-14.

BILL OF MATERIAL

ITEM	UNIT	AMOUNT
GIRDERS & DETAILS	Lbs.	1,491,660
SHEAR CONNECTOR STUDS	Lbs.	16,460
BEARINGS	Lbs.	45,689
EXPANSION GUARDS	Lbs.	49,293
STRUCTURAL STEEL TOTAL PLAN 1	Lbs.	1,603,102

FRAMING PLANS

SPAN W3 THRU W7 - AS SHOWN

SPAN E3 THRU E7 - OPPOSITE HAND

DESIGNED BY B.H.

DRAWN BY E.F.

CHECKED BY C.D.

APPROVED BY K.A.

CITY OF CHICAGO
DEPARTMENT OF PUBLIC WORKS
BUREAU OF ENGINEERING

SOUTHWEST ROUTE SUPERHIGHWAY
ELEVATED HIGHWAY
S. PRAIRIE AVE. TO S. LAKE PARK AVE.
SECTION SW–1818.3–1H

FRAMING PLAN 1

SCALE: 1" = 10'–0" MAR. 1965

SHEET NO. S-12 OF 64 SHEETS

111-60L70_As-Builts.dgn

AECOM

USER NAME = auyeungh	DESIGNED -	REVISED -
	CHECKED -	REVISED -
PLOT SCALE =	DRAWN - HAY	REVISED -
PLOT DATE = 11/11/2014	CHECKED - ATB	REVISED -

STATE OF ILLINOIS
DEPARTMENT OF TRANSPORTATION

AS–BUILTS

SHEET NO. 11 OF 174 SHEETS

F.A.I. RTE.	SECTION	COUNTY	TOTAL SHEETS	SHEET NO.
55	2010-080-B	COOK	886	328
		CONTRACT NO. 60L70		
	ILLINOIS	FED. AID PROJECT		

FOR INFORMATION ONLY

ROUTE NO.	SECTION	COUNTY	TOTAL SHEETS	SHEET NO.
F. A. I.-55	SW-1818.3-1H	COOK	64	31
FED. ROAD DIV. NO. 4	ILLINOIS	PROJECT I-55-7(58)-288		

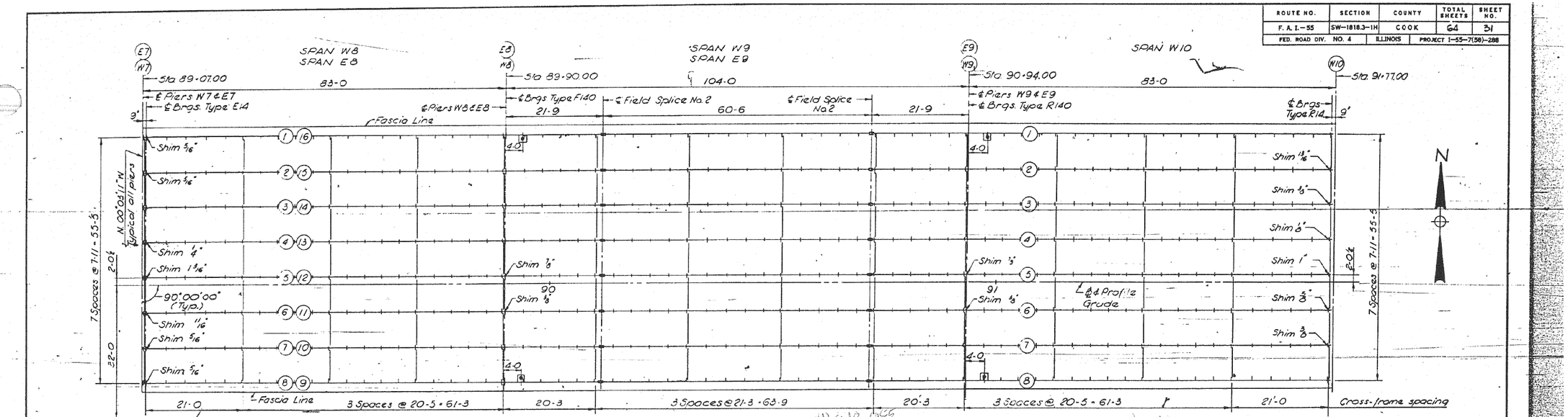

FRAMING PLAN

SPAN W8 THRU W10 - AS SHOWN
SPAN E8 AND E9 - OPPOSITE HAND

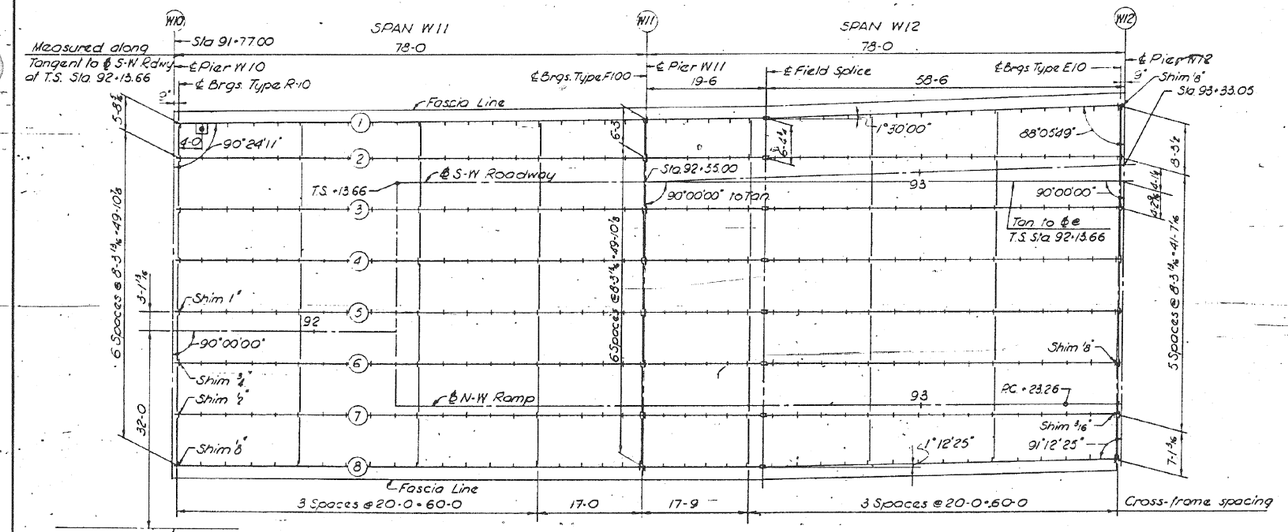

FRAMING PLAN
SPAN W11 AND W12

NOTES:

Intermediate stiffeners between cross-frames shall be equally spaced as shown, but not to exceed depth of web plate.
All lines of Field Splices and cross-frames are parallel to ℄ piers.
Girders are perpendicular to ℄ piers unless noted.
⊡ - Denotes floor drain location.
For Details see Sheet No. G-13 & G-14
For Structural Steel Notes and Girder Location Plan see Sheet No. S-14

BILL OF MATERIAL

ITEM	UNIT	AMOUNT
GIRDERS & DETAILS	Lbs.	822,902
SHEAR CONNECTOR STUDS	Lbs.	10,387
BEARINGS *	Lbs.	31,114
EXPANSION GUARDS	Lbs.	14,402
STRUCTURAL STEEL TOTAL PLAN 2	Lbs.	876,059

* Includes Bearings at Pier E9

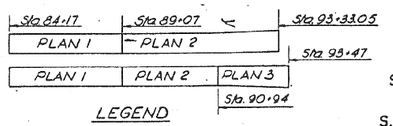

LEGEND

CITY OF CHICAGO
DEPARTMENT OF PUBLIC WORKS
BUREAU OF ENGINEERING

SOUTHWEST ROUTE SUPERHIGHWAY
ELEVATED HIGHWAY
S. PRAIRIE AVE. TO S. LAKE PARK AVE.
SECTION SW-1818.3-1H

FRAMING PLAN 2

SCALE: 1" = 10'-0 MAR. 1966
SHEET NO. S-13 OF 64 SHEETS

DESIGNED BY B.H.
DRAWN BY E.F.
CHECKED BY C.P.
APPROVED BY K.A.

112-60L70_As-Builts.dgn

AECOM

USER NAME = auyeungh	DESIGNED -	REVISED -
	CHECKED -	REVISED -
PLOT SCALE =	DRAWN - HAY	REVISED -
PLOT DATE = 11/11/2014	CHECKED - ATB	REVISED -

STATE OF ILLINOIS
DEPARTMENT OF TRANSPORTATION

AS-BUILTS

SHEET NO. 12 OF 174 SHEETS

F.A.I. RTE.	SECTION	COUNTY	TOTAL SHEETS	SHEET NO.
55	2010-080-B	COOK	886	329
		CONTRACT NO. 60L70		
	ILLINOIS FED. AID PROJECT			

FOR INFORMATION ONLY

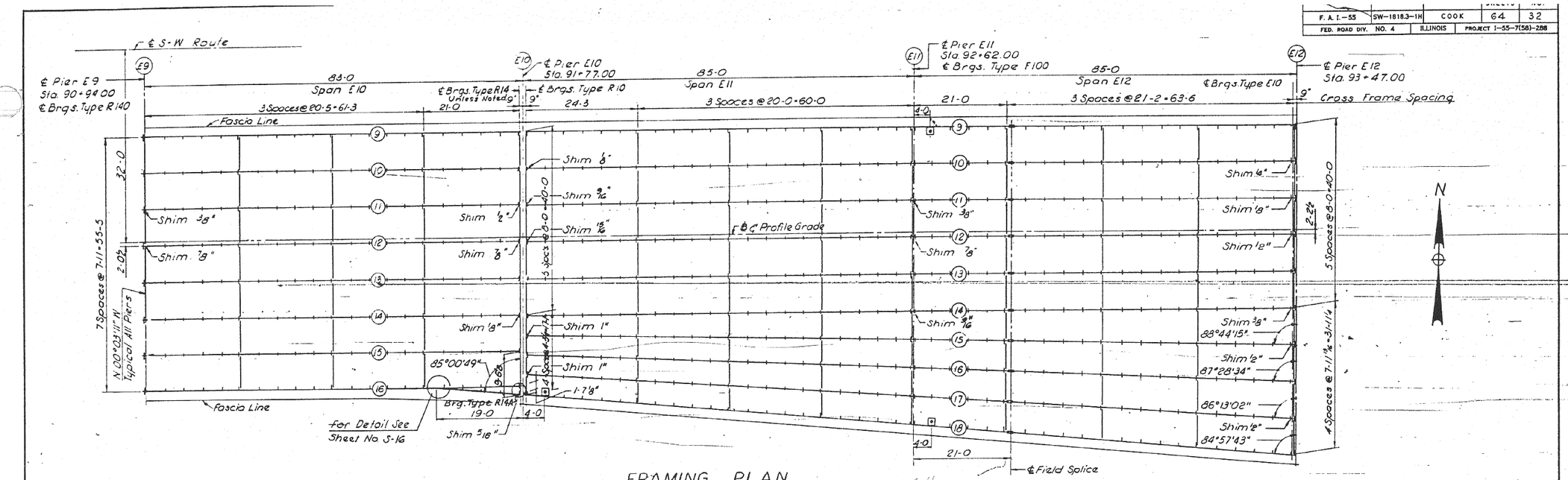

FRAMING PLAN
SPAN E10 THRU E12

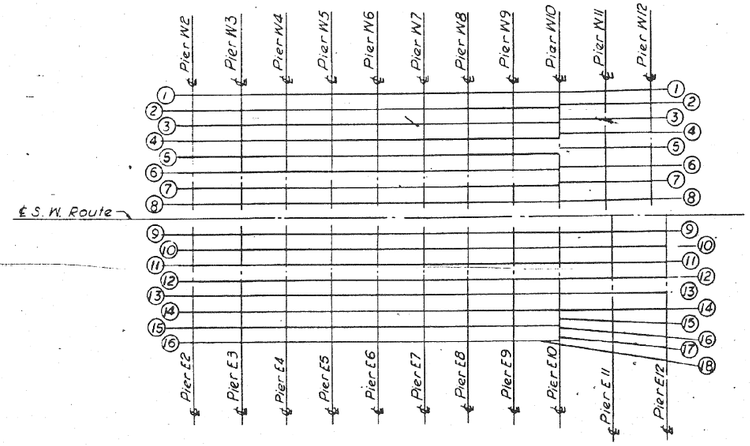

GIRDER LOCATION PLAN

STRUCTURAL STEEL NOTES

ALL FURNISHING, FABRICATING, TRANSPORTING, ERECTING AND PAINTING OF STRUCTURAL STEEL SHALL BE IN ACCORDANCE WITH SECTION 54 AND 56 OF THE STANDARD SPECIFICATIONS.

BEARING AND SPLICE NOTES

ALL GIRDER FIELD SPLICES SHALL BE SUB-PUNCHED, REAMED AND MATCH-MARKED FOR SHIPMENT WHILE THE MEMBERS ARE SHOP ASSEMBLED IN PROPER ALIGNMENT, WITH OR WITHOUT DIAPHRAGMS. ALL GIRDER FIELD SPLICES SHALL BE SUB-PUNCHED 9/16" AND REAMED TO 15/16" FOR 7/8" BOLTS.

ALL GIRDERS SHALL BE ERECTED FULL LENGTH IN THE SHOP BEFORE REAMING AND INSPECTION.

ALL FIELD CONNECTIONS SHALL BE MADE WITH 3/4" OR 7/8" HIGH STRENGTH BOLTS AS INDICATED.

STRUCTURAL STEEL SHALL RECEIVE ONE SHOP COAT OF RED LEAD PAINT. PARTS INACCESSIBLE AFTER ERECTION SHALL HAVE TWO SHOP COATS OF RED LEAD PAINT. FOR ADDITIONAL SHOP AND FIELD PAINT COATS SEE THE SPECIAL PROVISIONS.

ALL ROCKERS, BOLSTERS, BEARING PLATES LEAD PLATES, PINTLES, ANCHOR BOLTS AND SPLICES SHALL BE FABRICATED, SET AND FINISHED IN ACCORDANCE WITH ARTICLE 54.5 OF THE STANDARD SPECIFICATIONS. THESE ITEMS ARE INCLUDED IN THE WEIGHT OF STRUCTURAL STEEL.

SPLICE PLATES TO BE MATCH-MARKED FOR SHIPMENT.

ANCHOR BOLTS SHALL BE SET IN ACCORDANCE WITH CHECKED SHOP DRAWINGS BEFORE BOLTING DIAPHRAGMS OVER PIERS.

FINISHED SURFACES OF BEARING DEVICES SHALL BE TREATED WITH ANTI-RUST COMPOUND BEFORE SHIPMENT AS STATED IN ARTICLE 56.4 OF THE STANDARD SPECIFICATIONS.

Notes:
Shims, where required, shall be furnished in one piece.
Intermediate stiffeners between cross-frames shall be equally spaced as shown, but not to exceed the depth of web plate.
All lines of field splices and cross frames are parallel to ℄ Pier.
Girders are perpendicular to ℄ Piers unless noted.
⊡ Denotes floor drain location. For details see Sheet No. G-13 & G-14

BILL OF MATERIAL

ITEM	UNIT	AMOUNT
Girders & Details	Lbs.	380,447
Shear Connector Studs	Lbs.	5,323
Bearings *	Lbs.	11,984
Expansion Guards	Lbs.	13,941
Structural Steel Total For Plan 3	Lbs.	411,695

* Does not include Bearings at Pier E9.

PLAN 1 | PLAN 2 — Sta 93+33.05
PLAN 1 | PLAN 2 | PLAN 3
Sta 84+17 — Sta 89+07 — Sta 90+94 — Sta 93+47

LEGEND

CITY OF CHICAGO
DEPARTMENT OF PUBLIC WORKS
BUREAU OF ENGINEERING

SOUTHWEST ROUTE SUPERHIGHWAY
ELEVATED HIGHWAY
S. PRAIRIE AVE. TO S. LAKE PARK AVE.
SECTION SW-1818.3-1H

FRAMING PLAN 3

SCALE: AS NOTED — MAR. 1965
SHEET NO. S-14 OF 64 SHEETS

F. A. I.-55	SW-1818.3-1H	COOK	64	32
FED. ROAD DIV. NO. 4	ILLINOIS	PROJECT 1-55-7(58)-288		

DESIGNED BY B.H.
DRAWN BY E.E. & I.M.
CHECKED BY C.B.
APPROVED BY K.A.

113-60L70_As-Builts.dgn

AECOM

USER NAME = auyeungh	DESIGNED -	REVISED -
	CHECKED -	REVISED -
PLOT SCALE =	DRAWN - HAY	REVISED -
PLOT DATE = 11/11/2014	CHECKED - ATB	REVISED -

STATE OF ILLINOIS
DEPARTMENT OF TRANSPORTATION

AS-BUILTS

SHEET NO. 13 OF 174 SHEETS

F.A.I. RTE.	SECTION	COUNTY	TOTAL SHEETS	SHEET NO.
55	2010-080-B	COOK	886	330
		CONTRACT NO. 60L70		
	ILLINOIS FED. AID PROJECT			

FOR INFORMATION ONLY

ROUTE NO.	SECTION	COUNTY	TOTAL SHEETS	SHEET NO.
F. A. I. – 55	SW–1818.3–1H	COOK	64	33
FED. ROAD DIV. NO. 4	ILLINOIS	PROJECT I–55–7(58)–288		

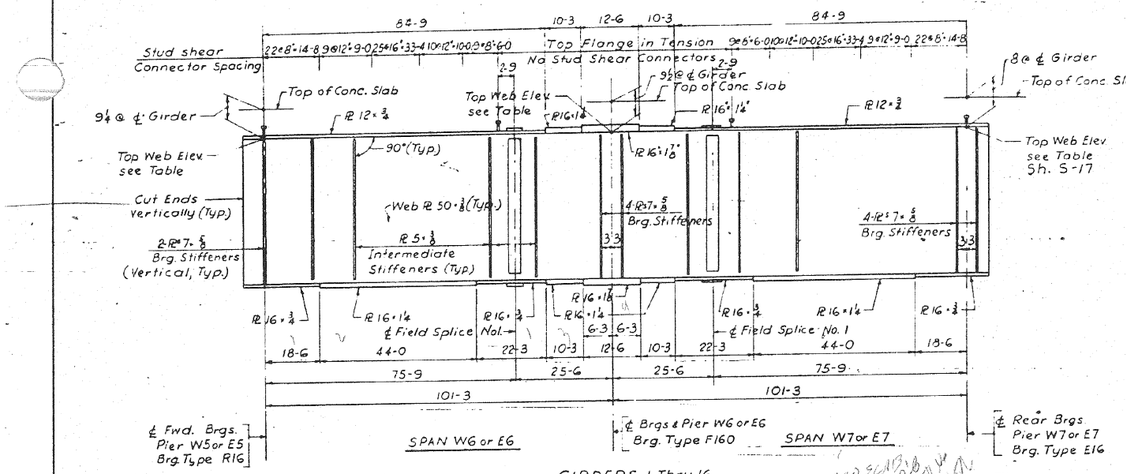

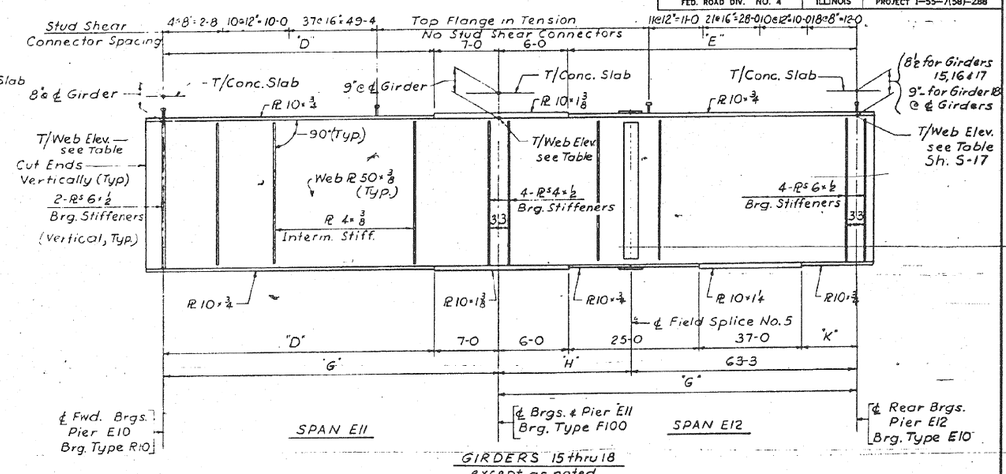

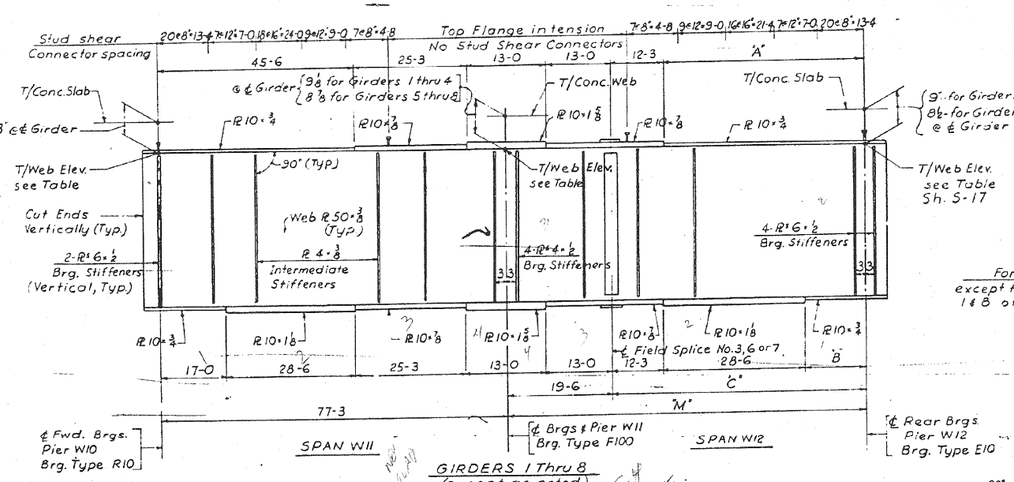

Girder	A	B	C	M
1	45-6¼	17-0¼	57-9¼	77-3¼
2 Thru 7	45-6	17-0	57-9	77-3
8	45-6 13/16	17-0 3/16	57-9 3/16	77-3 3/16

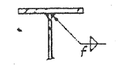

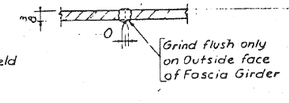

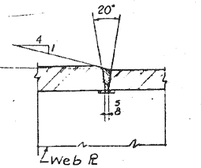

TYPICAL WELD DETAILS

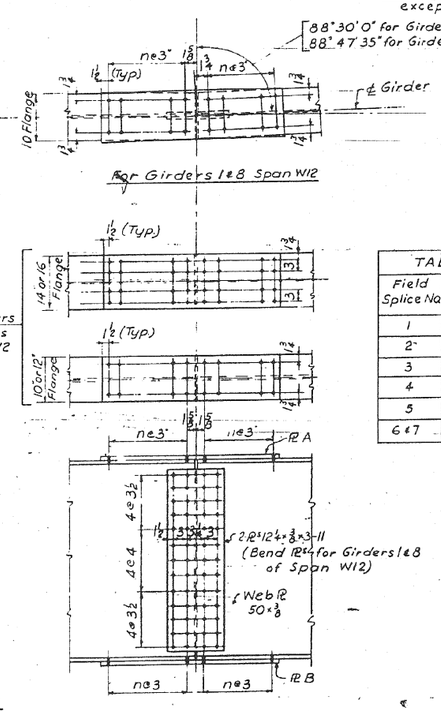

Girder	D'	E	G'	H'	K'
15	77-3¼	78-3¼	84-3¼	21-0¼	16-3¼
16	77-4	78-4	84-4	21-1	16-4
17	77-5 3/16	78-5 3/16	84-5 3/16	21-2 3/16	16-5 3/16
18	77-6 5/16	78-6 5/16	84-6 5/16	21-3 5/16	16-6 5/16

TABLE OF FIELD SPLICE DATA

Field Splice No.	Top Flg. Splice R	n	Bott. Flg. Splice R	n
	R A		R B	
1	12×¾×4-6¼	8	16×¾×3-0¼	5
2	10×¾×3-6¼	6	14×¾×3-0¼	5
3	10×⅜×4-0¼	7	10×⅞×4-0¼	7
4	10×1×4-6¼	8	10×1×4-6¼	8
5	10×¾×3-6¼	6	10×¾×3-6¼	6
6 & 7	10½×⅞×4-0½	7	10½×⅞×4-0½	7

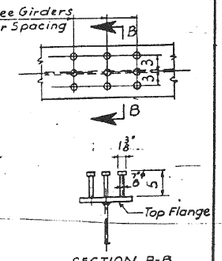

CITY OF CHICAGO
DEPARTMENT OF PUBLIC WORKS
BUREAU OF ENGINEERING

SOUTHWEST ROUTE SUPERHIGHWAY
ELEVATED HIGHWAY
S. PRAIRIE AVE. TO S. LAKE PARK AVE.
SECTION SW–1818.3–1H

GIRDER ELEVATIONS

SCALE: NONE — MAR. 1965

SHEET NO. S-15 OF 64 SHEETS

DESIGNED BY B.H.
DRAWN BY B.B.
CHECKED BY C.D.
APPROVED BY K.A.

114-60L70_As-Builts.dgn

AECOM

USER NAME = auyeungh	DESIGNED -	REVISED -
	CHECKED -	REVISED -
PLOT SCALE =	DRAWN - HAY	REVISED -
PLOT DATE = 11/11/2014	CHECKED - ATB	REVISED -

STATE OF ILLINOIS
DEPARTMENT OF TRANSPORTATION

AS–BUILTS

SHEET NO. 14 OF 174 SHEETS

F.A.I. RTE.	SECTION	COUNTY	TOTAL SHEETS	SHEET NO.
55	2010-080-B	COOK	886	331
		CONTRACT NO. 60L70		
	ILLINOIS FED. AID PROJECT			

FOR INFORMATION ONLY

ROUTE NO.	SECTION	COUNTY	TOTAL SHEETS	SHEET NO.
F. A. I.-55	SW-1818.3-1H	COOK	64	34
FED. ROAD DIV. NO. 4	ILLINOIS	PROJECT I-55-7(58)-288		

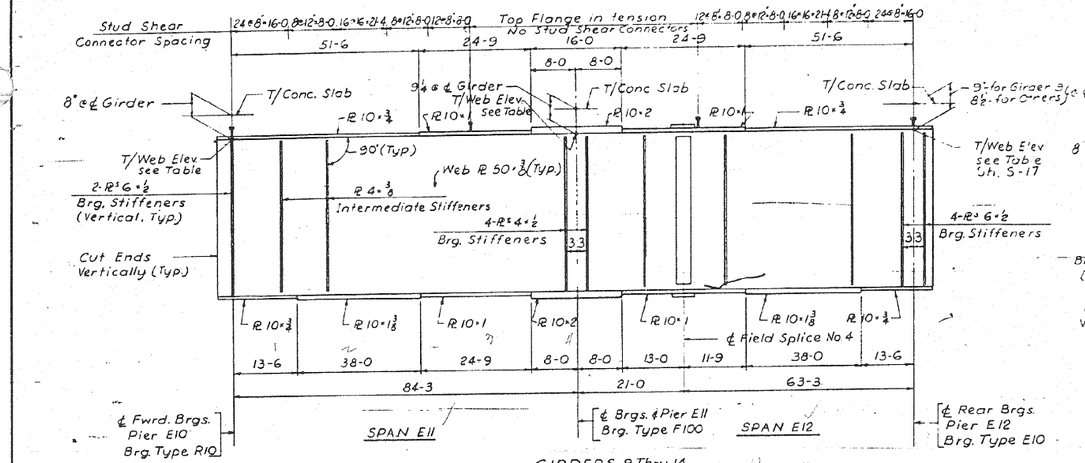

GIRDERS 9 Thru 14

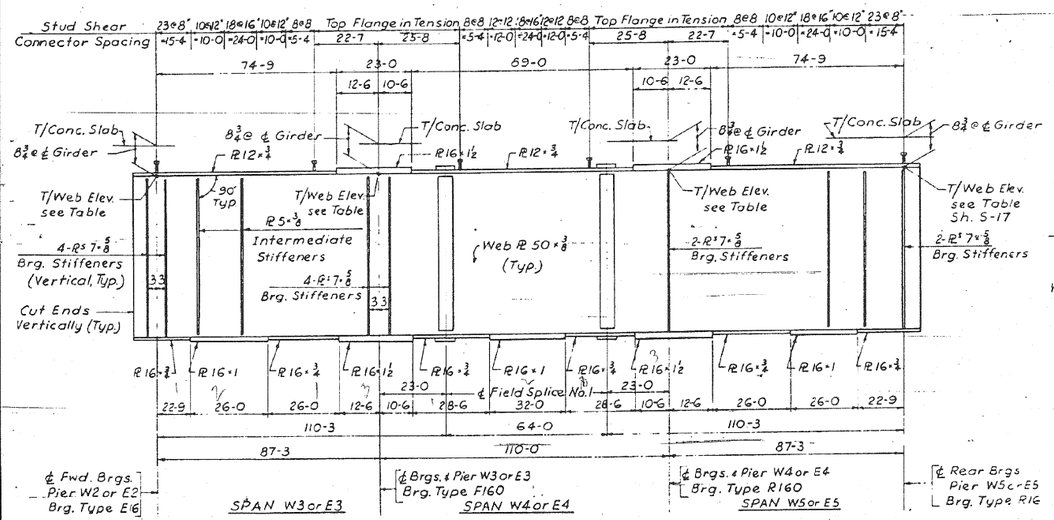

GIRDERS 1 Thru 16

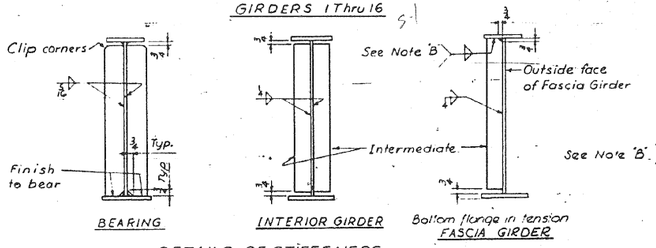

DETAILS OF STIFFENERS

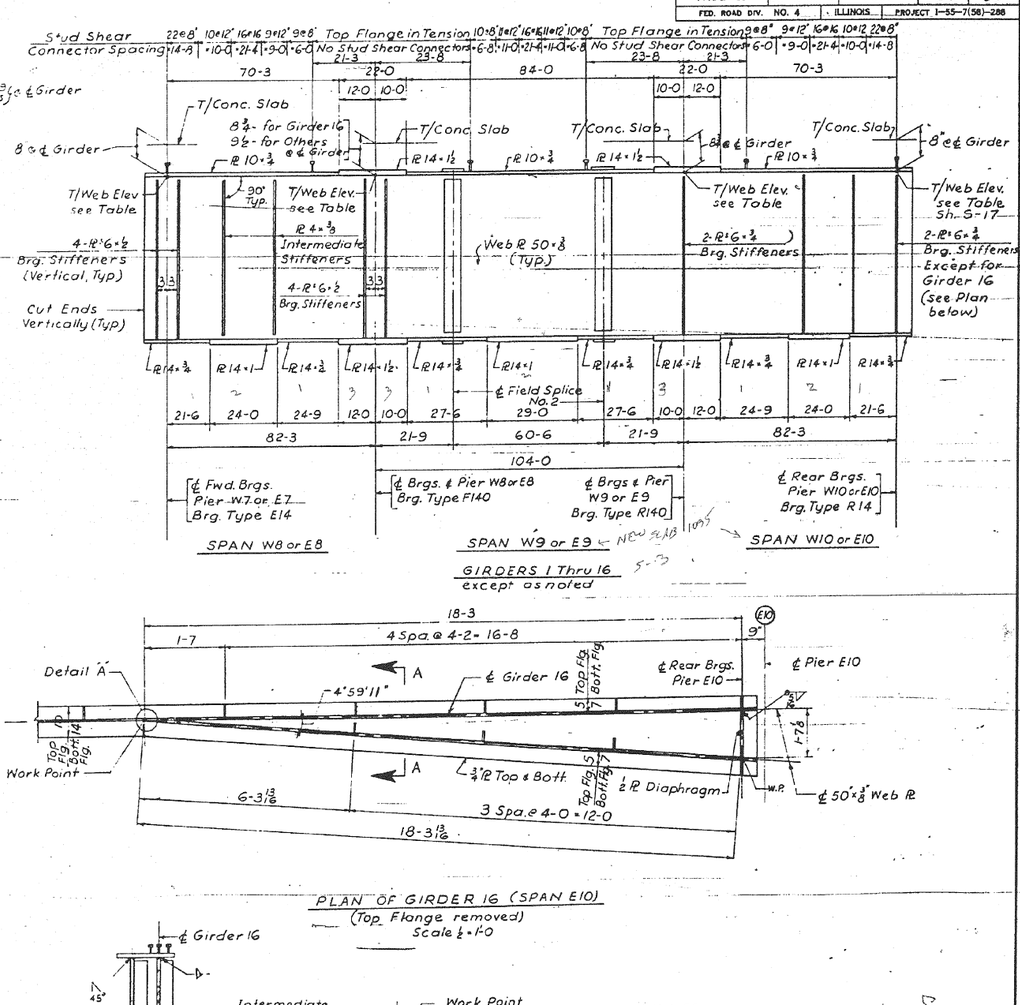

GIRDERS 1 Thru 16 except as noted

PLAN OF GIRDER 16 (SPAN E10)
(Top Flange removed)
Scale ½"=1'-0

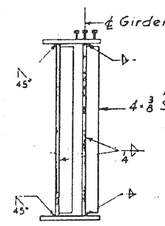

SECTION A-A

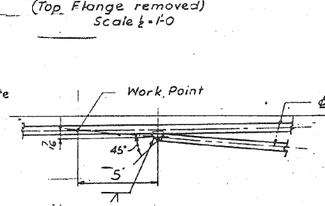

DETAIL A

NOTE 'B'
Fillet Weld Sizes.

Flange Thickness	Weld Size
¾" to 1⅛"	⅝"
Over 1⅛" to 2¼"	⅞"

CITY OF CHICAGO
DEPARTMENT OF PUBLIC WORKS
BUREAU OF ENGINEERING

SOUTHWEST ROUTE SUPERHIGHWAY
ELEVATED HIGHWAY
S. PRAIRIE AVE. TO S. LAKE PARK AVE.
SECTION SW-1818.3-1H

GIRDER ELEVATIONS

SCALE: NONE
MAR. 1965
SHEET NO. S-16 OF 64 SHEETS

DESIGNED BY B.H.
DRAWN BY B.B.
CHECKED BY C.D.
APPROVED BY K.A.

115-60L70_As-Builts.dgn

AECOM

USER NAME = auyeungh	DESIGNED -	REVISED -
	CHECKED -	REVISED -
PLOT SCALE =	DRAWN - HAY	REVISED -
PLOT DATE = 11/11/2014	CHECKED - ATB	REVISED -

STATE OF ILLINOIS
DEPARTMENT OF TRANSPORTATION

AS-BUILTS
SHEET NO. 15 OF 174 SHEETS

F.A.I. RTE.	SECTION	COUNTY	TOTAL SHEETS	SHEET NO.
55	2010-080-B	COOK	886	332
		CONTRACT NO. 60L70		
	ILLINOIS FED. AID PROJECT			

FOR INFORMATION ONLY

ROUTE NO.	SECTION	COUNTY	TOTAL SHEETS	SHEET NO.
F. A. I.—55	SW-1818.3-1H	COOK	64	35
FED. ROAD DIV. NO. 4	ILLINOIS	PROJECT I-55-7(58)-288		

TABLE OF TOP OF WEB ELEVATIONS

GIRDER No.	SPANS W3, W4 & W5				SPANS W6 & W7			SPANS W8, W9 & W10				SPANS W11 & W12		
	℄ Fwd. Brg. Pier W2	℄ Brg. Pier W3	℄ Brg. Pier W4	℄ Rear Brg. Pier W5	℄ Fwd. Brg. Pier W5	℄ Brg. Pier W6	℄ Rear Brg. Pier W7	℄ Fwd. Brg. Pier W7	℄ Brg. Pier W8	℄ Brg. Pier W9	℄ Rear Brg. Pier W10	℄ Fwd. Brg. Pier W10	℄ Brg. Pier W11	℄ Rear Brg. Pier W12
1	25.993	28.392	31.417	33.816	33.816	36.506	38.697	38.722	39.700	40.473	40.946	40.950	41.195	41.057
2	26.240	28.639	31.664	34.064	34.063	36.754	38.945	38.970	39.948	40.720	41.193	41.128	41.391	41.365
3	26.419	28.818	31.843	34.242	34.242	36.932	39.123	39.148	40.126	40.898	41.372	41.340	41.602	41.671
4	26.556	28.956	31.981	34.380	34.379	37.070	39.261	39.286	40.264	41.036	41.510	41.501	41.763	41.974
5	26.636	29.035	32.060	34.459	34.459	37.149	39.340	39.365	40.343	41.115	41.589	41.585	41.890	42.276
6	26.597	28.997	32.022	34.421	34.420	37.111	39.302	39.327	40.305	41.077	41.550	41.564	41.996	42.574
7	26.480	28.879	31.904	34.304	34.303	36.994	39.185	39.210	40.188	40.960	41.468	41.479	42.101	42.869
8	26.233	28.632	31.657	34.056	34.056	36.746	38.937	38.962	39.940	40.712	41.375	41.386	42.206	43.120

GIRDER No.	SPANS E3, E4 & E5				SPANS E6 & E7			SPANS E8, E9 & E10				SPANS E11 & E12		
	℄ Fwd. Brg. Piet E2	℄ Brg. Pier E3	℄ Brg. Pier E4	℄ Rear Brg. Pier E5	℄ Fwd. Brg. Pier E5	℄ Brg. Pier E6	℄ Rear Brg. Pier E7	℄ Fwd. Brg. Pier E7	℄ Brg. Pier E8	℄ Brg. Pier E9	℄ Rear Brg. Pier E10	℄ Fwd. Brg. Pier E10	℄ Brg. Pier E11	℄ Rear Brg. Pier E12
9	26.233	28.632	31.657	34.056	34.056	36.746	38.937	38.962	39.940	40.712	41.186	41.190	41.484	41.703
10	26.480	28.879	31.904	34.304	34.303	36.994	39.185	39.210	40.188	40.960	41.433	41.440	41.734	41.995
11	26.597	28.997	32.022	34.421	34.420	37.111	39.302	39.327	40.305	41.077	41.550	41.558	41.852	42.114
12	26.636	29.035	32.060	34.459	34.459	37.149	39.340	39.365	40.343	41.115	41.589	41.594	41.888	42.149
13	26.556	28.956	31.981	34.380	34.379	37.070	39.261	39.286	40.264	41.036	41.510	41.514	41.808	42.069
14	26.419	28.818	31.843	34.242	34.242	36.932	39.123	39.148	40.126	40.898	41.372	41.372	41.666	41.927
15	26.240	28.639	31.664	34.064	34.063	36.754	38.945	38.970	39.951	40.740	41.213	41.287	41.565	41.768
16	25.993	28.392	31.417	33.816	33.816	36.506	38.697	38.722	39.781	40.582	41.055	41.201	41.442	41.608
17	—	—	—	—	—	—	—	—	—	—	—	41.116	41.319	41.448
18	—	—	—	—	—	—	—	—	—	—	—	41.030	41.197	41.247

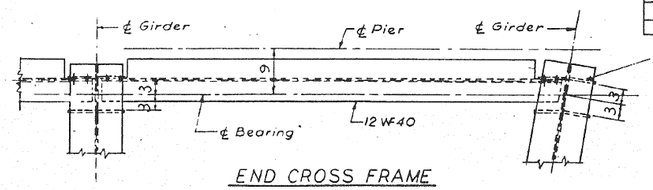

Set End Bearing Stiffeners on outside of Fascia Girder normal to ℄ Girder.

END CROSS FRAME

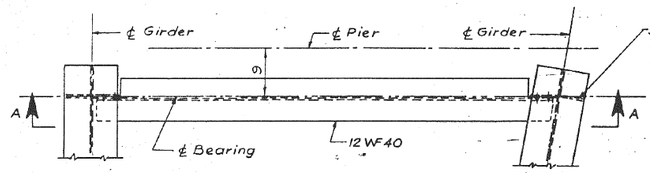

Set End Bearing Stiffeners on outside of Fascia Girder normal to ℄ Girder.

END CROSS FRAME

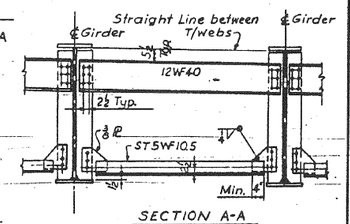

SECTION A-A
For Pier E10 (Beams 14 Thr 6,18 SPAN E11)

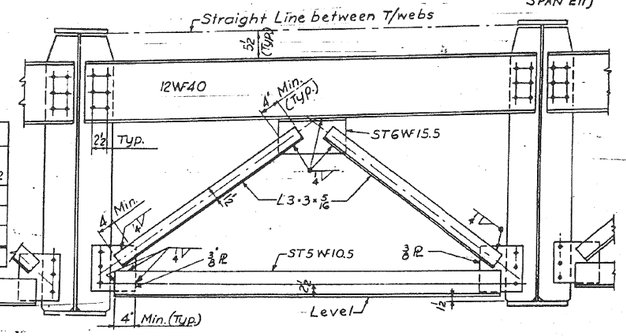

SECTION A-A

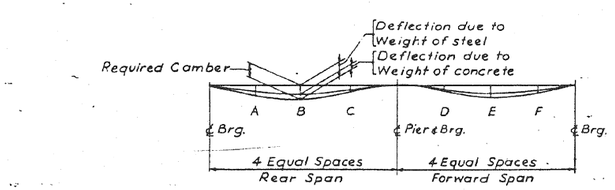

DEFLECTION & CAMBER DATA

Girder & Span	1 Thru 16 Spans W6 & E6			1 Thru 16 Spans W7 & E7			1 Thru 8 Span W11			1 Thru 8 Span W12			9 Thru 14 Span E11			9 Thru 14 Span E12			15 Thru 18 Span E11			15 Thru 18 Span E12		
Point	A	B	C	D	E	F	A	B	C	D	E	F	A	B	C	D	E	F	A	B	C	D	E	F
Steel Deflection	1/4	4/16	1/8	1/8	4/16	4/16	1/16	1/16	1/16	1/16	1/16	1/16	1/16	1/8	1/16	1/16	1/8	1/16	1/8	1/8	1/16	1/16	1/8	1/8
Concrete Deflection	13/16	15/16	3/8	3/8	15/16	13/16	3/8	3/8	1/16	3/16	5/16	1/16	3/8	7/16	3/16	5/16	7/16	3/8	3/8	3/8	1/8	5/16	5/16	5/16
Required Camber	1 1/16	1 3/16	1/2	1/2	1 1/16	1 1/16	7/16	1/2	1/4	1/4	1/2	1/16	3/8	1/16	1/4	1/4	9/16	7/16	1/2	1/2	3/16	3/8	13/16	11/16

DEFLECTION AND CAMBER DIAGRAM TWO SPANS CONTINUOUS GIRDERS

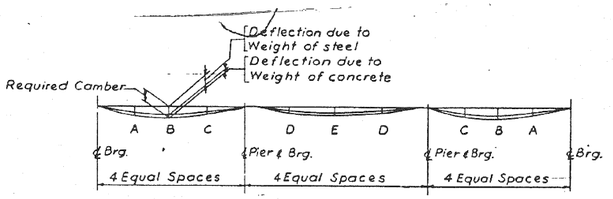

DEFLECTION & CAMBER DATA

Girder & Span	1 Thru 16 Span W3, W4, W5, E3, E4, E5					1 Thru 16 Span W8, W9, W10, E8, E9, E10				
Point	A	B	C	D	E	A	B	C	D	E
Steel Deflection	1/8	1/16	1/16	1/8	3/16	1/8	1/8	1/16	1/16	1/8
Concrete Deflection	1/2	9/16	4/16	1/4	9/16	7/16	1/2	5/16	4/16	1/2
Required Camber	5/8	1/4	5/16	3/8	3/4	9/16	5/8	4/16	5/16	5/8

DEFLECTION AND CAMBER DIAGRAM THREE SPANS CONTINUOUS GIRDERS

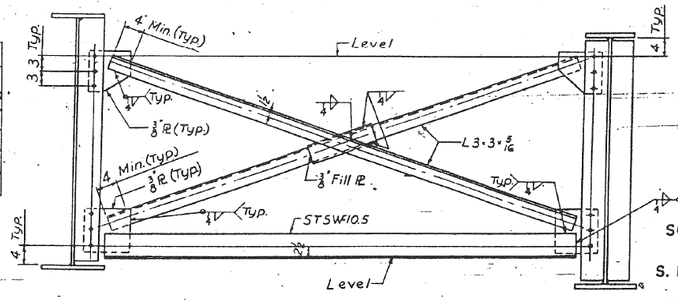

TYPICAL INTERMEDIATE CROSS FRAME

DESIGNED BY B.H. + B.G.
DRAWN BY B.B.
CHECKED BY C.D.
APPROVED BY K.A.

CITY OF CHICAGO
DEPARTMENT OF PUBLIC WORKS
BUREAU OF ENGINEERING

SOUTHWEST ROUTE SUPERHIGHWAY
ELEVATED HIGHWAY
S. PRAIRIE AVE. TO S. LAKE PARK AVE.
SECTION SW-1818.3-1H

GIRDER AND CROSS FRAME DETAILS

SCALE: AS NOTED MAR. 1965
SHEET NO. 5-17 OF 64 SHEETS

116-60L70_As-Builts.dgn

USER NAME = auyeungh	DESIGNED -	REVISED -
	CHECKED -	REVISED -
PLOT SCALE =	DRAWN - HAY	REVISED -
PLOT DATE = 11/11/2014	CHECKED - ATB	REVISED -

AECOM

STATE OF ILLINOIS
DEPARTMENT OF TRANSPORTATION

AS-BUILTS
SHEET NO. 16 OF 174 SHEETS

F.A.I. RTE.	SECTION	COUNTY	TOTAL SHEETS	SHEET NO.
55	2010-080-B	COOK	886	333
		CONTRACT NO. 60L70		
	ILLINOIS	FED. AID PROJECT		

FOR INFORMATION ONLY

ROUTE NO.	SECTION	COUNTY	TOTAL SHEETS	SHEET NO.
F. A. L.—55	SW—1818.3—1H	COOK	64	36
FED. ROAD DIV. NO. 4	ILLINOIS	PROJECT I—55—7(58)—288		

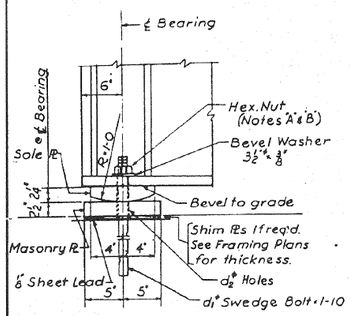

FIXED BEARING TYPE F
(See Table for Additional Dimensions)

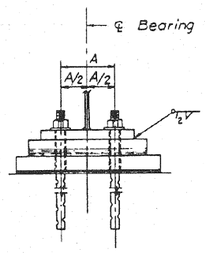

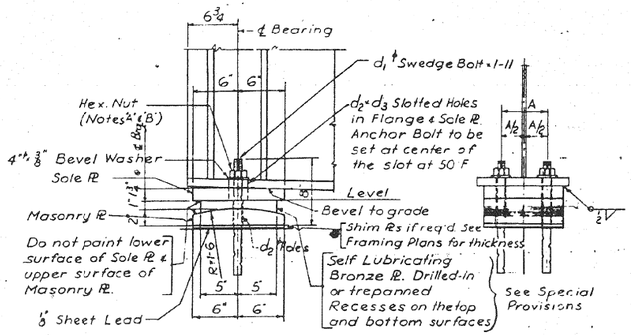

EXPANSION BEARING TYPE E
(See Table for Additional Dimensions)

FIXED BEARING TYPE F TABLE

Mark	Total	Sole Pl ‡	Masonry Pl	Lead Pl	A	d_1	d_2
F100	18	8"x2¼"x1'-4"	10"x2½"x1'-10"	10"x⅜"x1'-10"	6"	1½"	1⅜"
F140	16	8"x2¼"x1'-6"	10"x2½"x2'-0"	10"x⅜"x2'-0"	7"	1½"	1⅜"
F160	32	8"x2¼"x1'-8"	10"x2½"x2'-2"	10"x⅜"x2'-2"	7"	1½"	1⅜"

EXPANSION BEARING TYPE E TABLE

Mark	Total	Sole Pl ‡	Bronze Pl	Masonry Pl	Lead Pl	A	d_1	d_2	$d_2 \times d_3$
E10	18	12"x1¾"x0'-9"	10"x1¾"x0'-9"	12"x2"x0'-9"	12"x⅜"x0'-9"	6"	1¼"	1⅝"	1⅝"x2¾"
E14	16	12"x1¾"x1'-0½"	10"x1¾"x1'-0½"	12"x2"x1'-0½"	12"x⅜"x1'-0½"	7"	1¼"	1⅝"	1⅝"x2¾"
E16	32	12"x1¾"x1'-2"	10"x1¾"x1'-2"	12"x2"x1'-2"	12"x⅜"x1'-2"	7"	1½"	1⅞"	1⅞"x3"

‡ Thickness shown is at ℄ Bearing

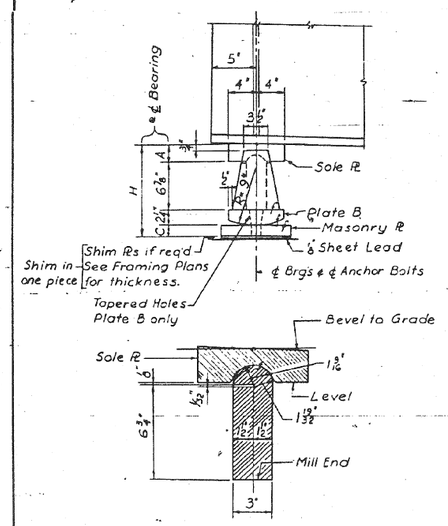

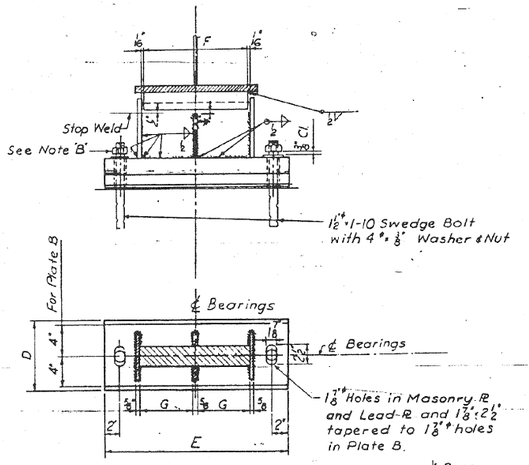

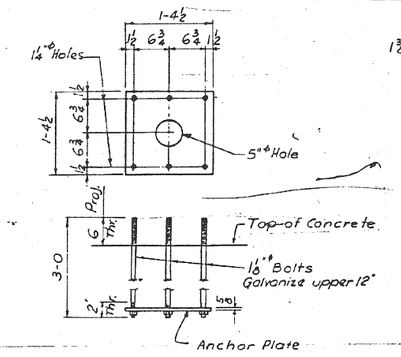

ANCHOR BOLT DETAIL
FOR OVERHEAD SIGNS WB5 & EB7
8-Assemblies required

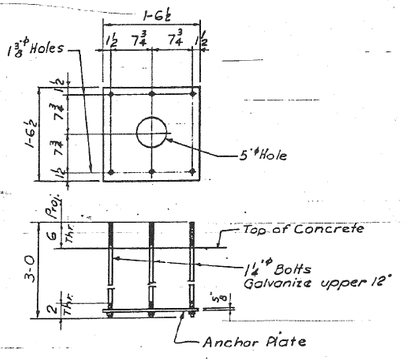

ANCHOR BOLT DETAIL
FOR OVERHEAD SIGN EB8
4 Assemblies required

ROCKER BEARING TYPE R

Mark	Total Req'd	A	C	H	D	E	F	G
R10	18	3"	1½"	1'-1⅝"	8"	1'-6"	8"	3¾"
R14	15	3"	1½"	1'-1⅝"	8"	2'-0"	1'-0"	5¾"
R16	32	3"	1½"	1'-1⅝"	8"	2'-0"	1'-2"	6¾"
R 140	16	3½"	2¼"	1'-2⅜"	10"	2'-0"	1'-0"	5¾"
R 160	16	3½"	2¼"	1'-2⅜"	10"	2'-0"	1'-2"	6¾"

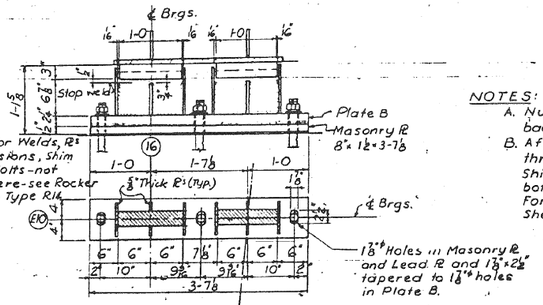

NOTE: For Welds, Pl ℄ Dimensions, Shim Notes & Bolts—not shown here—see Rocker Bearing Type R14.

ROCKER BEARING TYPE R14A (One-Req'd.)

NOTES:
A. Nut shall be drawn up finger tight, then backed off ⅛ turn.
B. After nut is properly adjusted, burr off threads of bolt at face of nut with a pointed tool. Shim plates to be same width and length as bottom plates. For location and thickness of shim plates see Sheets S-12 Thru S14

DESIGNED BY H.N.
DRAWN BY B.B.
CHECKED BY B.H.
APPROVED BY K.A.

CITY OF CHICAGO
DEPARTMENT OF PUBLIC WORKS
BUREAU OF ENGINEERING

SOUTHWEST ROUTE SUPERHIGHWAY
ELEVATED HIGHWAY
S. PRAIRIE AVE. TO S. LAKE PARK AVE.
SECTION SW—1818.3—1H

BEARING AND ANCHOR BOLT DETAILS

SCALE: AS NOTED MAR. 1965
SHEET NO. S-18 OF 64 SHEETS

117-60L70_As-Built-s.dgn

AECOM

USER NAME = auyeungh	DESIGNED -	REVISED -
	CHECKED -	REVISED -
PLOT SCALE =	DRAWN - HAY	REVISED -
PLOT DATE = 11/11/2014	CHECKED - ATB	REVISED -

STATE OF ILLINOIS
DEPARTMENT OF TRANSPORTATION

AS-BUILTS
SHEET NO. 17 OF 174 SHEETS

F.A.I. RTE.	SECTION	COUNTY	TOTAL SHEETS	SHEET NO.
55	2010-080-B	COOK	886	334
		CONTRACT NO. 60L70		
	ILLINOIS FED. AID PROJECT			

FOR INFORMATION ONLY

ROUTE NO.	SECTION	COUNTY	TOTAL SHEETS	SHEET NO.
F. A. I.-55	SW-1818.3-1H	COOK	64	57
FED. ROAD DIV. NO. 4	ILLINOIS	PROJECT I-55-7(58)-288		

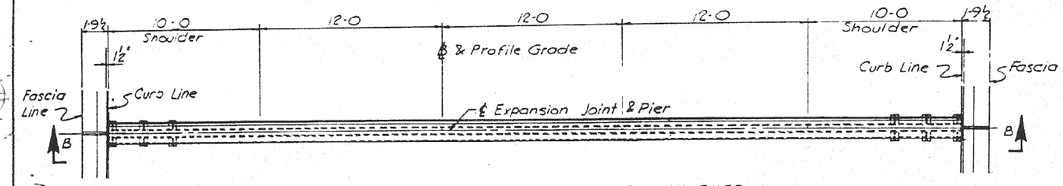

PLAN OF SLIDING PLATE EXPANSION GUARD
At Pier W7 - As Shown
At Pier E7 - Opp. Hand
For Typical Section see sheet No. S-20

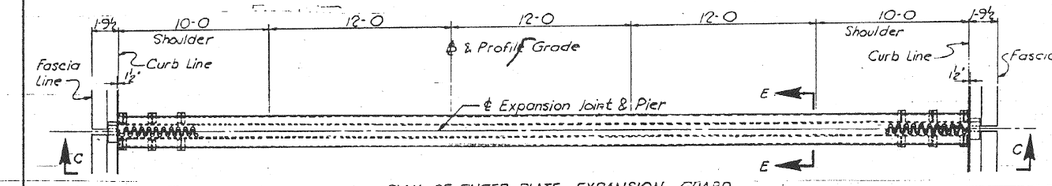

PLAN OF FINGER PLATE EXPANSION GUARD
At Piers W5 & W10 - As Shown
At Pier E5 - Opp. Hand

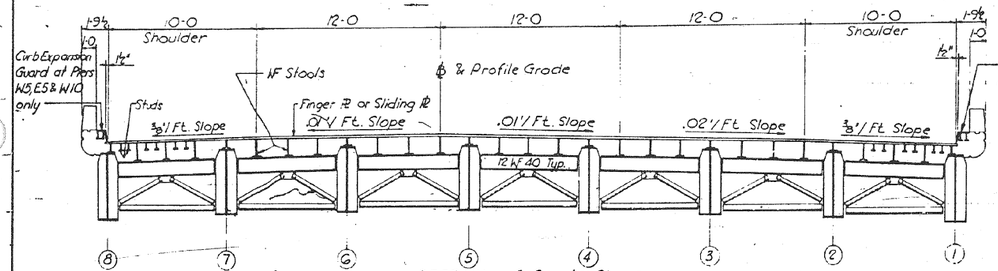

SECTION C-C As Shown
SECTION B-B Similar

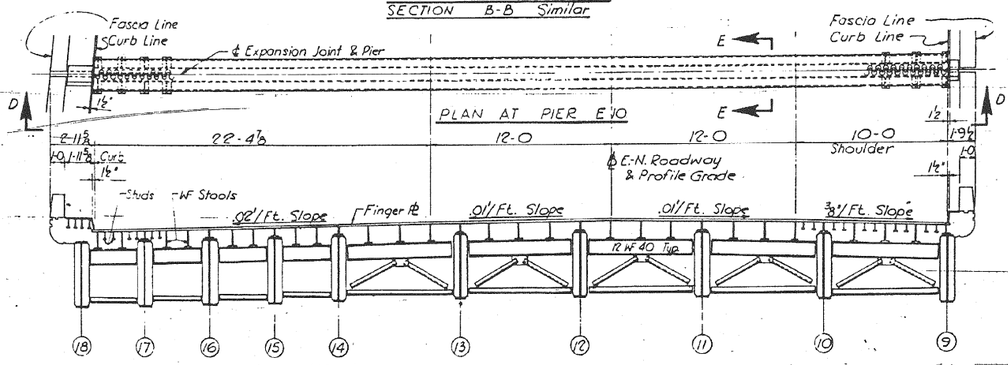

SECTION D-D

Note: All Dimensions Are Along ℄ of Expansion Joint & Pier

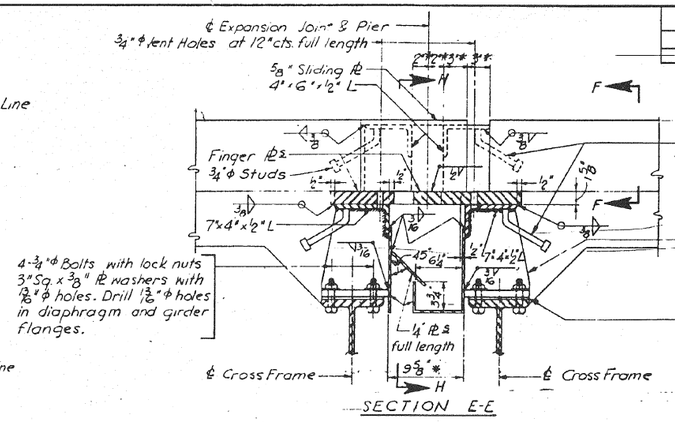

SECTION E-E

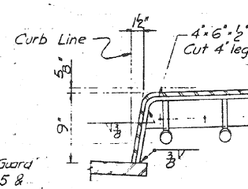

SECTION F-F
(At Pier E10)

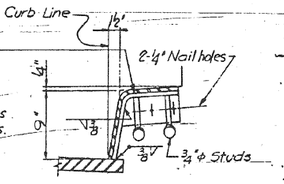

SECTION F-F
(At Others)

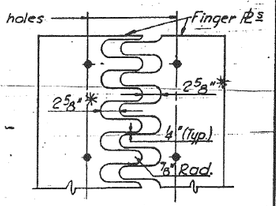

FINGER ℔ CUTTING DETAIL

Note: Dimensions marked so (*) shall be used at 50°F. For adjustments to joints at other temperatures see Table, sheet No. S-20

**Note: Use lightest ST WF sections available having stem thickness of not less than ⅜".

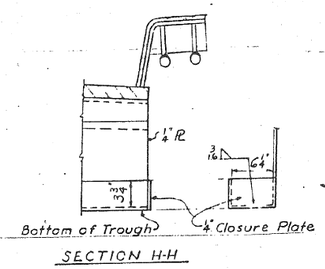

SECTION H-H

DESIGNED BY B.H.
DRAWN BY Geo. S.P.
CHECKED BY C.B.
APPROVED BY K.A.

CITY OF CHICAGO
DEPARTMENT OF PUBLIC WORKS
BUREAU OF ENGINEERING

SOUTHWEST ROUTE SUPERHIGHWAY
ELEVATED HIGHWAY
S. PRAIRIE AVE. TO S. LAKE PARK AVE.
SECTION SW-1818.3-1H

EXPANSION GUARD DETAILS

SCALE: AS NOTED MAR. 1965

SHEET NO. S-19 OF 64 SHEETS

118-60L70_As-Builts.dgn

AECOM

USER NAME = auyeungh	DESIGNED -	REVISED -
	CHECKED -	REVISED -
PLOT SCALE =	DRAWN - HAY	REVISED -
PLOT DATE = 11/11/2014	CHECKED - ATB	REVISED -

STATE OF ILLINOIS
DEPARTMENT OF TRANSPORTATION

AS-BUILTS

SHEET NO. 18 OF 174 SHEETS

F.A.I. RTE.	SECTION	COUNTY	TOTAL SHEETS	SHEET NO.
55	2010-080-B	COOK	886	335
		CONTRACT NO. 60L70		
		ILLINOIS FED. AID PROJECT		

FOR INFORMATION ONLY

ROUTE NO.	SECTION	COUNTY	TOTAL SHEETS	SHEET NO.
F.A.I.—55	SW-1818.3-1H	COOK	64	58
FED. ROAD DIV. NO. 4	ILLINOIS	PROJECT I-55-7(56)-288		

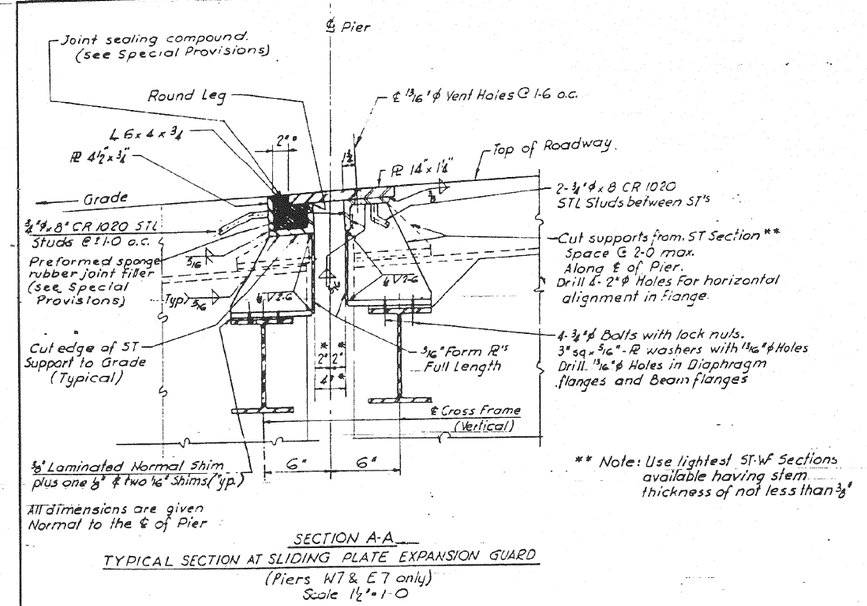

SECTION A-A
TYPICAL SECTION AT SLIDING PLATE EXPANSION GUARD
(Piers W7 & E7 only)
Scale 1 1/2" = 1'-0

** Note: Use lightest ST-WF Sections available having stem thickness of not less than 3/8"

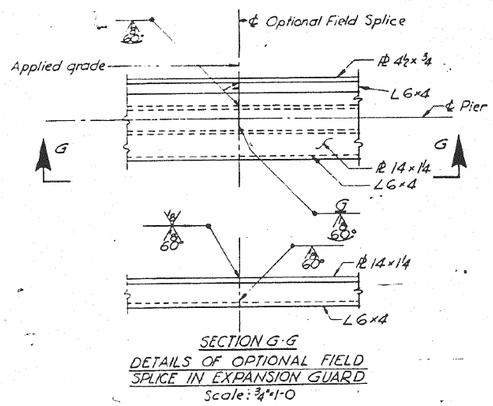

SECTION G-G
DETAILS OF OPTIONAL FIELD SPLICE IN EXPANSION GUARD
Scale: 3/4" = 1'-0

Joint Adjustment Table For 100' of Girder-length						
Temperatures	110°F	90°F	70°F	50°F	30°F	10°F
Adjustment "S" along ℄ of beam	-0.468"	-0.312"	-0.156"	0"	+0.156"	+0.312"

* Note:
Dimensions marked so (*) shall be used at 50°F. for temperatures other than 50°F adjustment will be made in accordance with table above. Adjustment shall be made in the direction normal to ℄ Pier.
Multiply values given in the table by the length of girder in feet and divide by 100. This is the required adjustment measured along ℄ of girder.

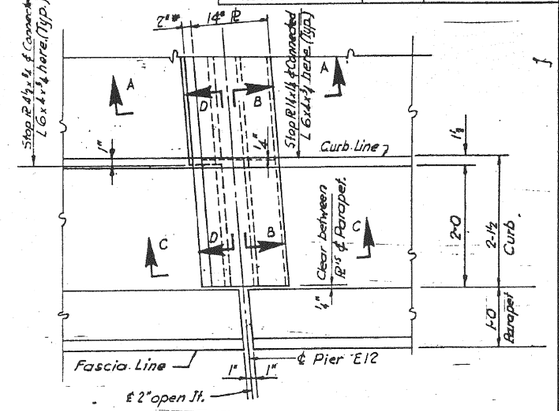

PARTIAL DECK PLAN AT PIER E12
FOR INFORMATION ONLY
Scale 1" = 1'-0

NOTE: Expansion Guards at W12 and E12 are furnished under Contract Section SW 1818.3-2H to be installed by the Contractor for this Section.

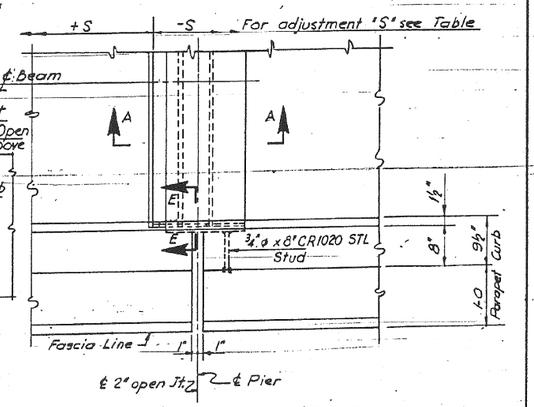

PARTIAL DECK PLAN WITH 9 1/2" CURB
Scale 1" = 1'-0

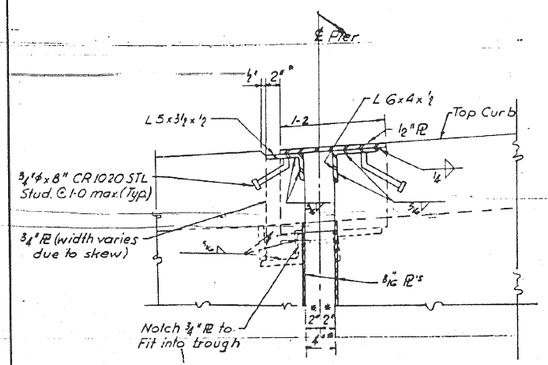

SECTION C-C
Scale 1 1/2" = 1'-0

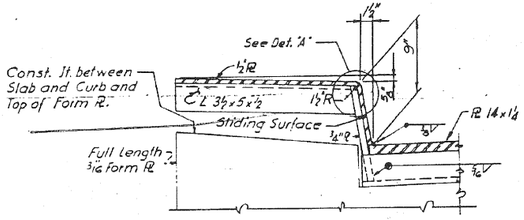

SECTION D-D
Scale 1 1/2" = 1'-0"

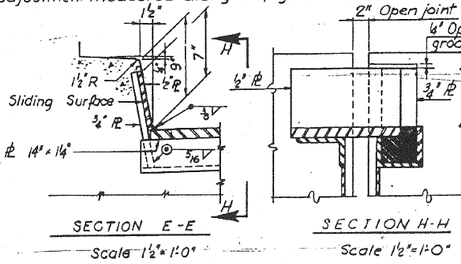

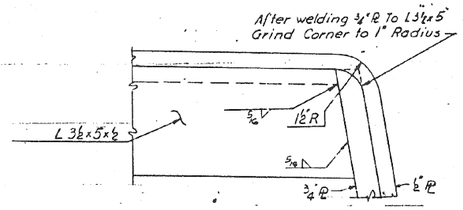

DETAIL "A"
Scale 6" = 1'-0

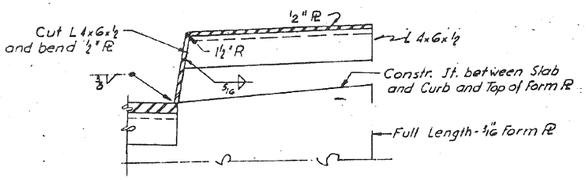

SECTION B-B
Scale 1 1/2" = 1'-0"

CITY OF CHICAGO
DEPARTMENT OF PUBLIC WORKS
BUREAU OF ENGINEERING

SOUTHWEST ROUTE SUPERHIGHWAY
ELEVATED HIGHWAY
S. PRAIRIE AVE. TO S. LAKE PARK AVE.
SECTION SW-1818.3-1H

EXPANSION GUARD DETAILS

SCALE: AS NOTED — MAR. 1965
SHEET NO. S-20 OF 64 SHEETS

DESIGNED BY H.N.
DRAWN BY E.L.
CHECKED BY BH
APPROVED BY K.A.

119-60L70_As-Builts.dgn

AECOM	USER NAME = auyeungh	DESIGNED -	REVISED -
		CHECKED -	REVISED -
	PLOT SCALE =	DRAWN - HAY	REVISED -
	PLOT DATE = 11/11/2014	CHECKED - ATB	REVISED -

STATE OF ILLINOIS
DEPARTMENT OF TRANSPORTATION

AS-BUILTS
SHEET NO. 19 OF 174 SHEETS

F.A.I. RTE.	SECTION	COUNTY	TOTAL SHEETS	SHEET NO.
55	2010-080-B	COOK	886	336
		CONTRACT NO. 60L70		
		ILLINOIS FED. AID PROJECT		

FOR INFORMATION ONLY

ROUTE NO.	SECTION	COUNTY	TOTAL SHEETS	SHEET NO.
F. A. I.—55	SW-1818.3-1H	COOK	64	39
FED. ROAD DIV. NO. 4	ILLINOIS	PROJECT I-55-7(58)-288		

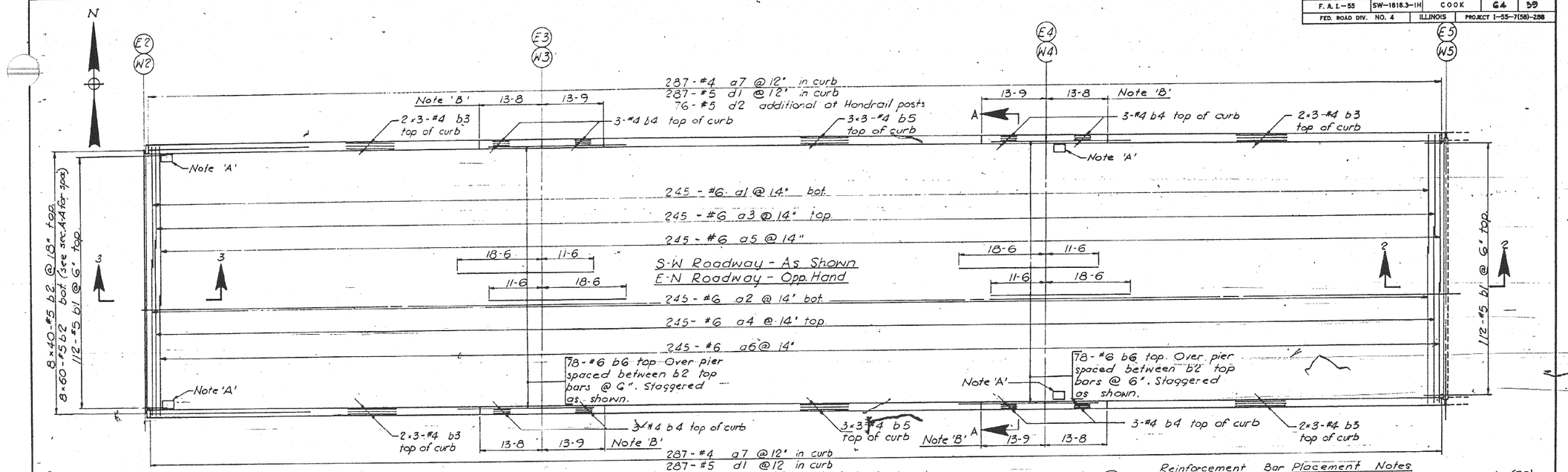

Reinforcement Bar Placement Notes

Minimum lap for all reinforcement bars shall be twenty (20) bar diameters.

All transverse bars in deck to be placed perpendicular to stringers

Designation of bars such as: 8 x 40 - #5 b2 indicates- 8 sets of 40 - #5 bars b2.

Additional Reinforcement at Light Standards & Drainage Inlets as shown on sheet No S-25 is billed in the Reinforcement Bar List only.

Notes:

For Section A-A and curb details see sheet No. S-24

For typ. details at light standards, end of expansion joints and Sections 1-1, 2-2 and 3-3, see sheet No. S-25

For locations of Drainage Inlets see sheets No. S-12 thru S-14

For locations of Light Standards see sheets No. S-26 and S-28

Alternate the placement of #6 a-bars which lap so that splices are staggered.

Note 'A': For details & typ. Reinforcement at Drainage Inlets see. sheet No. S-25.

Note 'B': Construction Jt. top of curb to top of slab. No reinf. bar to pass thru joints. Use '8" Aluminum sheets. Joints in curb must coincide with joints in parapet. For details see sheet No. S-24

PLAN 1 | PLAN 2 ← S-W Roadway

PLAN 1 | PLAN 2 | PLAN 3 ← E-N Roadway

KEY PLAN

CITY OF CHICAGO
DEPARTMENT OF PUBLIC WORKS
BUREAU OF ENGINEERING

SOUTHWEST ROUTE SUPERHIGHWAY
ELEVATED HIGHWAY
S. PRAIRIE AVE. TO S. LAKE PARK AVE.
SECTION: SW-1818.3-1H

DECK REINFORCEMENT PLAN 1

SCALE: 1" = 10'-0 MAR. 1965

SHEET NO. S-21 OF 64 SHEETS

DESIGNED BY B.H.
DRAWN BY Geo.S.P.
CHECKED BY B.H.
APPROVED BY K.A.

120-60L70_As-Builts.dgn

AECOM

USER NAME = auyeungh	DESIGNED -	REVISED -
	CHECKED -	REVISED -
PLOT SCALE =	DRAWN - HAY	REVISED -
PLOT DATE = 11/11/2014	CHECKED - ATB	REVISED -

STATE OF ILLINOIS
DEPARTMENT OF TRANSPORTATION

AS-BUILTS

SHEET NO. 20 OF 174 SHEETS

F.A.I. RTE.	SECTION	COUNTY	TOTAL SHEETS	SHEET NO.
55	2010-080-B	COOK	886	337
		CONTRACT NO. 60L70		
	ILLINOIS FED. AID PROJECT			

FOR INFORMATION ONLY

ROUTE NO.	SECTION	COUNTY	TOTAL SHEETS	SHEET NO.
F. A. I.—55	SW-1818.3-1H	COOK	64	40
FED. ROAD DIV. NO. 4	ILLINOIS	PROJECT I-55-7(58)-288		

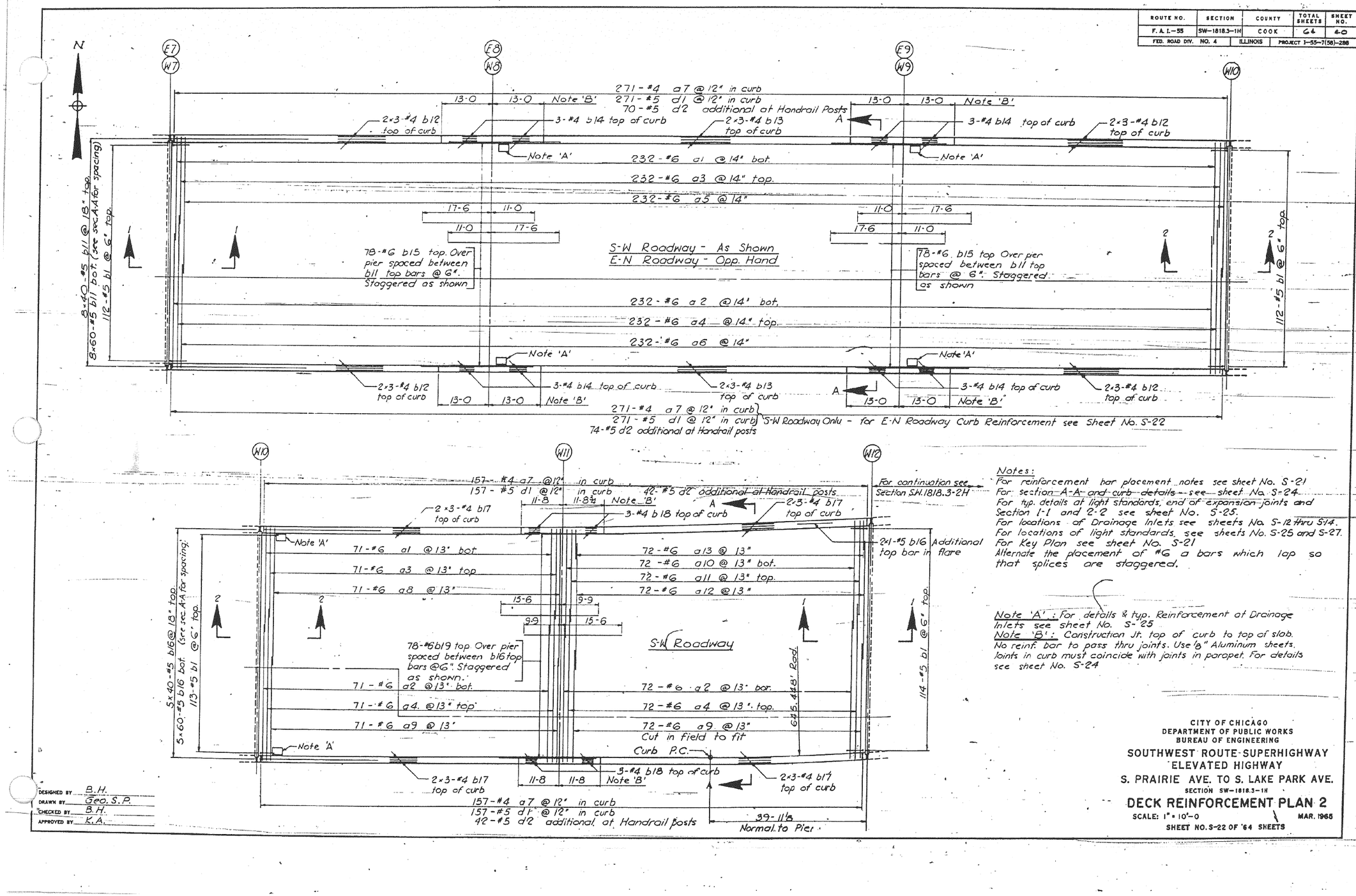

Notes:
For reinforcement bar placement notes see sheet No. S-21
For section A-A and curb details see sheet No. S-24
For typ. details at light standards, end of expansion joints and Section 1-1 and 2-2 see sheet No. S-25.
For locations of Drainage Inlets see sheets No. S-12 thru S-14.
For locations of light standards, see sheets No. S-25 and S-27.
For Key Plan see sheet No. S-21
Alternate the placement of #6 a bars which lap so that splices are staggered.

Note 'A': For details & typ. Reinforcement at Drainage Inlets see sheet No. S-25
Note 'B': Construction Jt. top of curb to top of slab. No reinf. bar to pass thru joints. Use ⅛" Aluminum sheets. Joints in curb must coincide with joints in parapet. For details see sheet No. S-24

DESIGNED BY B.H.
DRAWN BY Geo. S.P.
CHECKED BY B.H.
APPROVED BY K.A.

CITY OF CHICAGO
DEPARTMENT OF PUBLIC WORKS
BUREAU OF ENGINEERING

SOUTHWEST ROUTE-SUPERHIGHWAY
ELEVATED HIGHWAY
S. PRAIRIE AVE. TO S. LAKE PARK AVE.
SECTION SW-1818.3-1H

DECK REINFORCEMENT PLAN 2

SCALE: 1" = 10'-0 MAR. 1965
SHEET NO. S-22 OF 64 SHEETS

121-60L70_As-Builts.dgn

AECOM	USER NAME = auyeungh	DESIGNED -	REVISED -	
		CHECKED -	REVISED -	
	PLOT SCALE =	DRAWN - HAY	REVISED -	
	PLOT DATE = 11/11/2014	CHECKED - ATB	REVISED -	

STATE OF ILLINOIS
DEPARTMENT OF TRANSPORTATION

AS-BUILTS

SHEET NO. 21 OF 174 SHEETS

F.A.I. RTE.	SECTION	COUNTY	TOTAL SHEETS	SHEET NO.
55	2010-080-B	COOK	886	338
		CONTRACT NO. 60L70		
		ILLINOIS FED. AID PROJECT		

FOR INFORMATION ONLY

ROUTE NO.	SECTION	COUNTY	TOTAL SHEETS	SHEET NO.
F. A. I.–55	SW–1818.3–1H	COOK	64	41
FED. ROAD DIV. NO. 4	ILLINOIS	PROJECT I–55–7(58)–288		

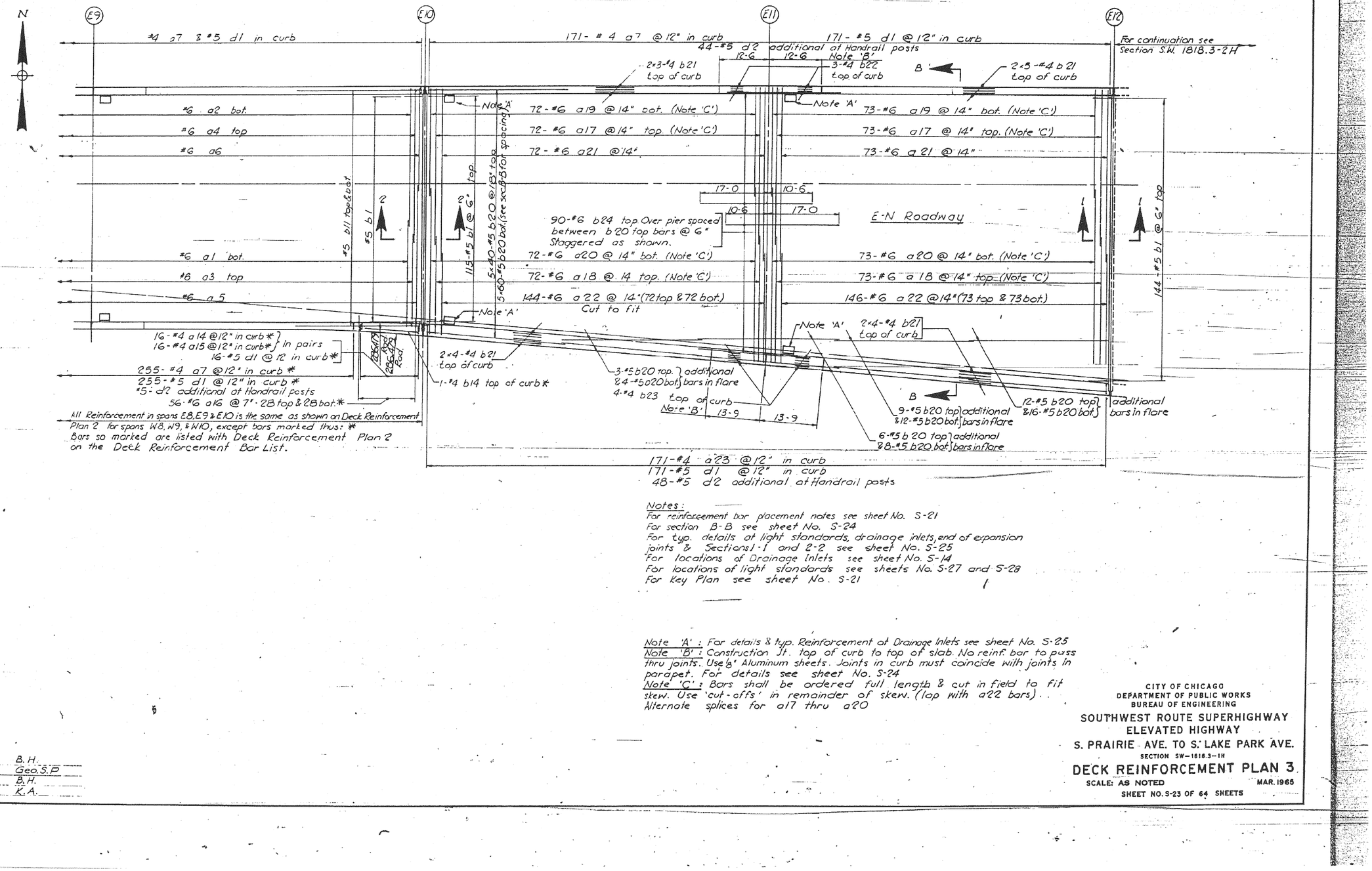

All Reinforcement in spans E8, E9 & E10 is the same as shown on Deck Reinforcement Plan 2 for spans W8, W9, & W10, except bars marked thus: * Bars so marked are listed with Deck Reinforcement Plan 2 on the Deck Reinforcement Bar List.

Notes:
For reinforcement bar placement notes see sheet No. S-21
For section B-B see sheet No. S-24
For typ. details at light standards, drainage inlets, end of expansion joints & Sections 1-1 and 2-2 see sheet No. S-25
For locations of Drainage Inlets see sheet No. S-14
For locations of light standards see sheets No. S-27 and S-28
For Key Plan see sheet No. S-21

Note 'A': For details & typ. Reinforcement at Drainage Inlets see sheet No. S-25
Note 'B': Construction Jt. top of curb to top of slab. No reinf. bar to pass thru joints. Use ½" Aluminum sheets. Joints in curb must coincide with joints in parapet. For details see sheet No. S-24
Note 'C': Bars shall be ordered full length & cut in field to fit skew. Use 'cut-offs' in remainder of skew. (lap with a22 bars). Alternate splices for a17 thru a20

DESIGNED BY B. H.
DRAWN BY Geo. S. P
*CHECKED BY B. H.
APPROVED BY K. A.

CITY OF CHICAGO
DEPARTMENT OF PUBLIC WORKS
BUREAU OF ENGINEERING
SOUTHWEST ROUTE SUPERHIGHWAY
ELEVATED HIGHWAY
S. PRAIRIE AVE. TO S. LAKE PARK AVE.
SECTION SW–1818.3–1H
DECK REINFORCEMENT PLAN 3
SCALE: AS NOTED MAR. 1965
SHEET NO. S-23 OF 64 SHEETS

122-60L70_As-Builts.dgn

AECOM	USER NAME = auyeungh	DESIGNED -	REVISED -	STATE OF ILLINOIS DEPARTMENT OF TRANSPORTATION
		CHECKED -	REVISED -	
	PLOT SCALE =	DRAWN - HAY	REVISED -	
	PLOT DATE = 11/11/2014	CHECKED - ATB	REVISED -	

AS–BUILTS

SHEET NO. 22 OF 174 SHEETS

F.A.I. RTE.	SECTION	COUNTY	TOTAL SHEETS	SHEET NO.
55	2010-080-B	COOK	886	339
		CONTRACT NO. 60L70		
	ILLINOIS	FED. AID PROJECT		

FOR INFORMATION ONLY

ROUTE NO.	SECTION	COUNTY	TOTAL SHEETS	SHEET NO.
F. A. I.—55	SW-1818.3-1H	COOK	64	42
FED. ROAD DIV. NO. 4	ILLINOIS	PROJECT I-55-7(58)-288		

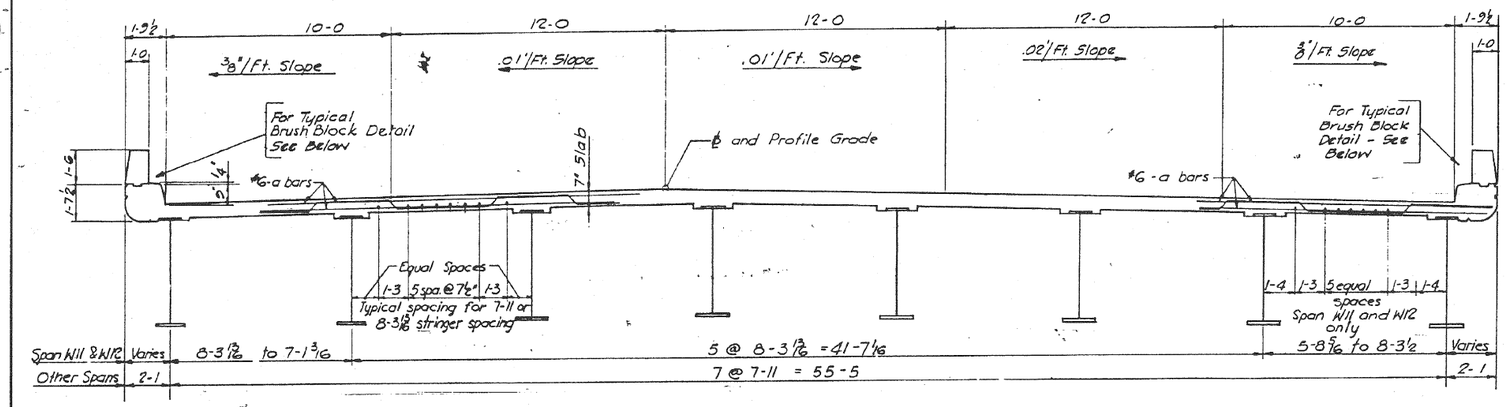

SECTION A-A
Scale: ⅜"=1'-0

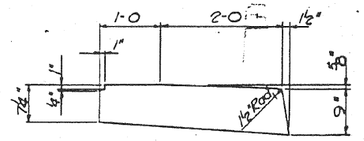

IN CURB (3 Req'd.)

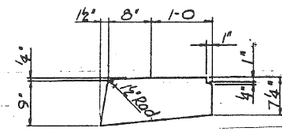

IN BRUSH BLOCK
(69 Req'd)

DETAILS OF ⅛" ALUMINUM SHEETS
ASTM B209 Alloy 3003-H14

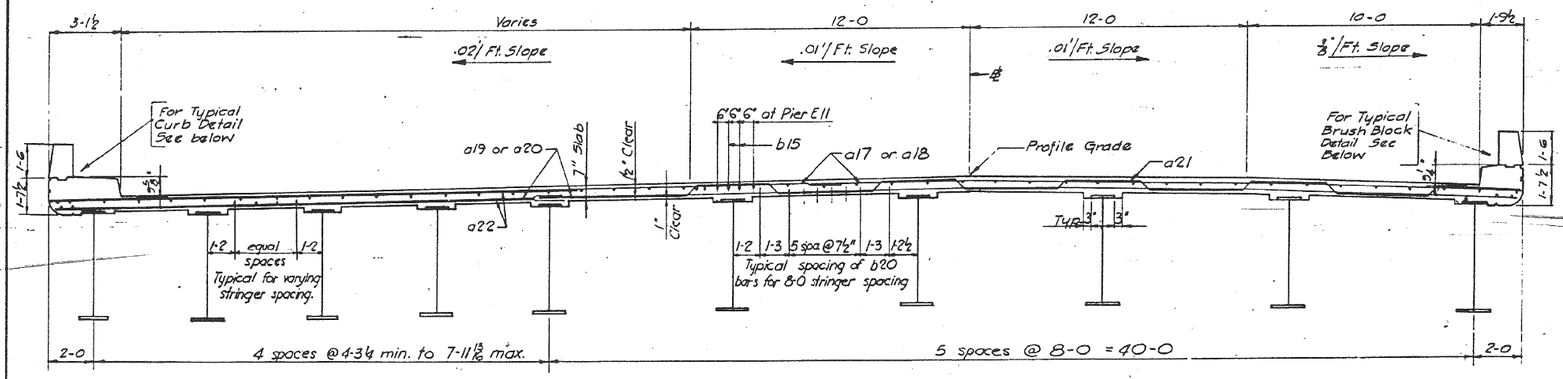

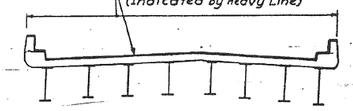

TYPICAL CROSS SECTION
(Showing Limits of Protective Coat)
(No Scale)

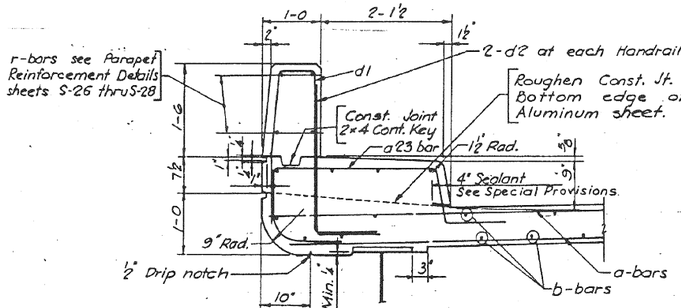

SECTION B-B
Scale: ¾"=1'-0

TYPICAL CURB DETAIL
Scale: 1"=1'-0"

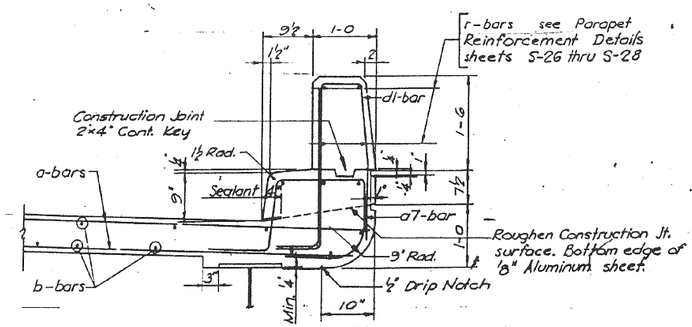

TYPICAL BRUSH BLOCK DETAIL
Scale: 1"=1'-0"

CITY OF CHICAGO
DEPARTMENT OF PUBLIC WORKS
BUREAU OF ENGINEERING

SOUTHWEST ROUTE SUPERHIGHWAY
ELEVATED HIGHWAY
S. PRAIRIE AVE. TO S. LAKE PARK AVE.
SECTION SW-1818.3-1H

TYPICAL CROSS SECTIONS

SCALE: AS NOTED MAR. 1965

SHEET NO. S-24 OF 64 SHEETS

DESIGNED BY B.H.
DRAWN BY V.P.
CHECKED BY B.H.
APPROVED BY K.A.

123-60L70_As-Builts.dgn

AECOM

USER NAME = auyeungh	DESIGNED -	REVISED -
	CHECKED -	REVISED -
PLOT SCALE =	DRAWN - HAY	REVISED -
PLOT DATE = 11/11/2014	CHECKED - ATB	REVISED -

STATE OF ILLINOIS
DEPARTMENT OF TRANSPORTATION

AS-BUILTS
SHEET NO. 23 OF 174 SHEETS

F.A.I. RTE.	SECTION	COUNTY	TOTAL SHEETS	SHEET NO.
55	2010-080-B	COOK	886	340
		CONTRACT NO. 60L70		
		ILLINOIS FED. AID PROJECT		

FOR INFORMATION ONLY

ROUTE NO.	SECTION	COUNTY	TOTAL SHEETS	SHEET NO.
F. A. I.—55	SW-1818.3-1H	COOK	64	45
FED. ROAD DIV. NO. 4	ILLINOIS	PROJECT I-55-7(58)-288		

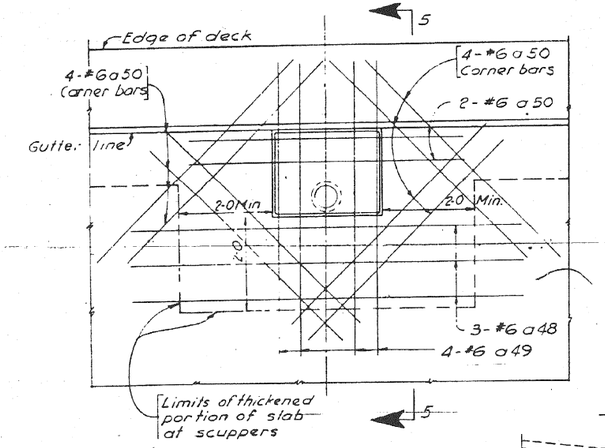

TYPICAL DETAIL AT FLOOR DRAIN
Scale: ¾"=1'-0

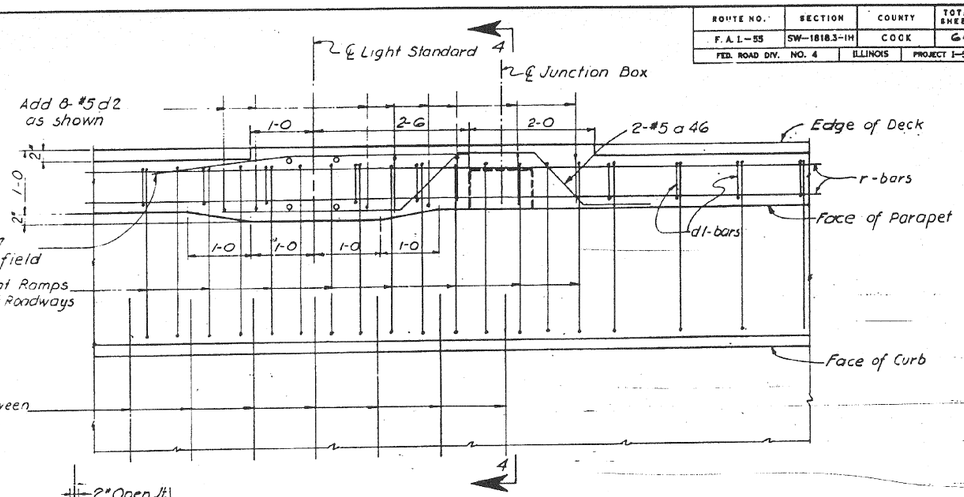

TYPICAL DETAIL AT LIGHT STANDARD AND JUNCTION BOX
Scale: 1"=1'-0

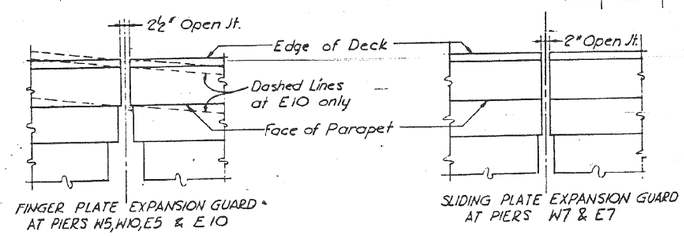

FINGER PLATE EXPANSION GUARD AT PIERS W5, W10, E5 & E10

SLIDING PLATE EXPANSION GUARD AT PIERS W7 & E7

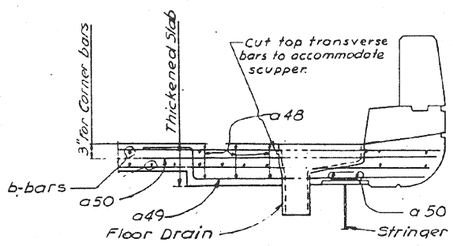

SECTION 5-5
Scale: ¾"=1'-0

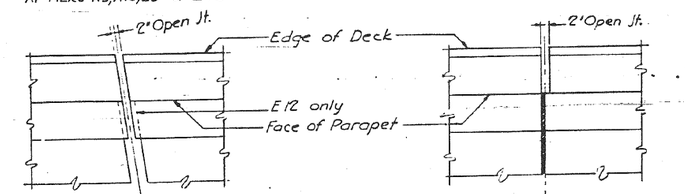

SLIDING PLATE EXPANSION GUARD AT PIERS W12 & E12

FILLED JOINT AT PIER W2 & E2

EXPANSION JOINT DETAIL AT PARAPET
Showing concrete outlines only, Steel exp. guard where applicable not shown. For details see sheet S-19

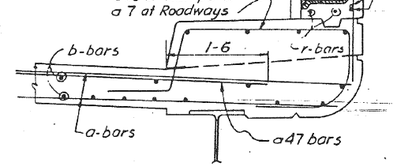

SECTION 4-4
Scale: 1" 1'-0

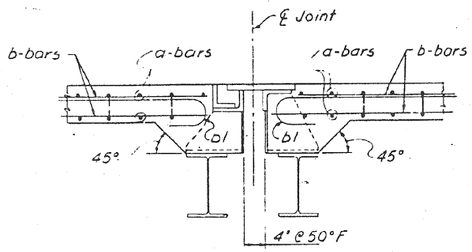

SECTION 1-1
Scale: 1"=1'-0

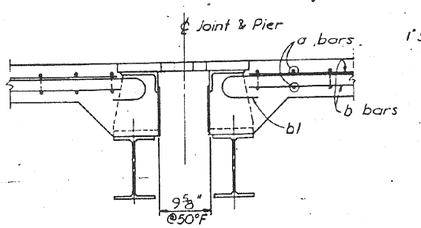

SECTION 2-2
Scale: 1"=1'-0

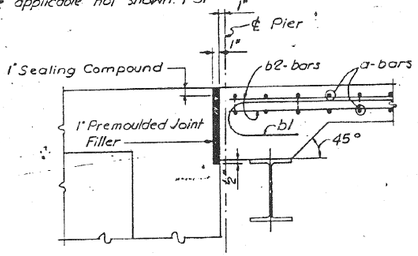

SECTION 3-3
Scale: 1"=1'-0

Note:
For Reinforcement Bar Placement Notes See Sh. No. S-21
For Location of Sections 1-1, 2-2 and 3-3 See Sh. No. S-21 thru S-23

DESIGNED BY H.N.
DRAWN BY F.L. & M.IV. & Geo.S.P
CHECKED BY B.H
APPROVED BY K.A.

CITY OF CHICAGO
DEPARTMENT OF PUBLIC WORKS
BUREAU OF ENGINEERING

SOUTHWEST ROUTE SUPERHIGHWAY
ELEVATED HIGHWAY
S. PRAIRIE AVE. TO S. LAKE PARK AVE.
SECTION SW-1818.3-1H

TYPICAL DECK DETAILS

SCALE: AS NOTED
MAR. 1965
SHEET NO. S-25 OF 64 SHEETS

124-60L70_As-Builts.dgn

AECOM

USER NAME = auyeungh	DESIGNED -		REVISED -
	CHECKED -		REVISED -
PLOT SCALE =	DRAWN - HAY		REVISED -
PLOT DATE = 11/11/2014	CHECKED - ATB		REVISED -

STATE OF ILLINOIS
DEPARTMENT OF TRANSPORTATION

AS-BUILTS
SHEET NO. 24 OF 174 SHEETS

F.A.I. RTE.	SECTION	COUNTY	TOTAL SHEETS	SHEET NO.
55	2010-080-B	COOK	886	341
		CONTRACT NO. 60L70		
	ILLINOIS FED. AID PROJECT			

FOR INFORMATION ONLY

ROUTE NO.	SECTION	COUNTY	SHEETS	SHEET NO.
F. A. I. – 55	SW–1818.3–1H	COOK	64	44
FED. ROAD DIV. NO. 4	ILLINOIS	PROJECT I–55–7(58)–288		

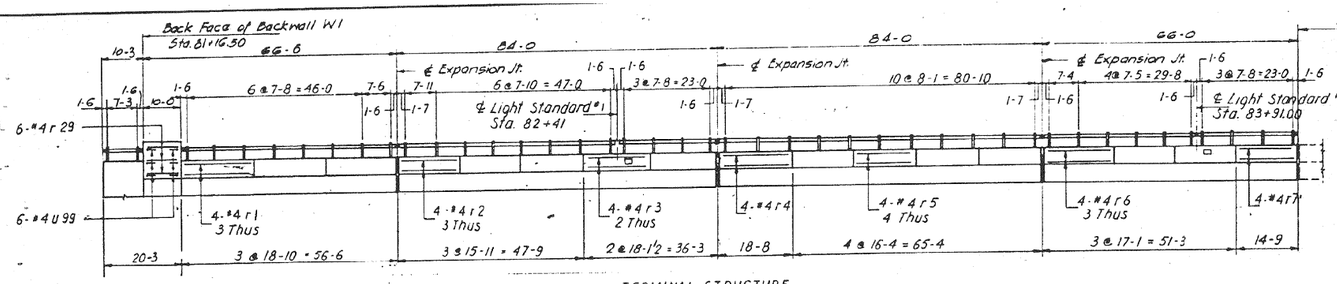

TERMINAL STRUCTURE

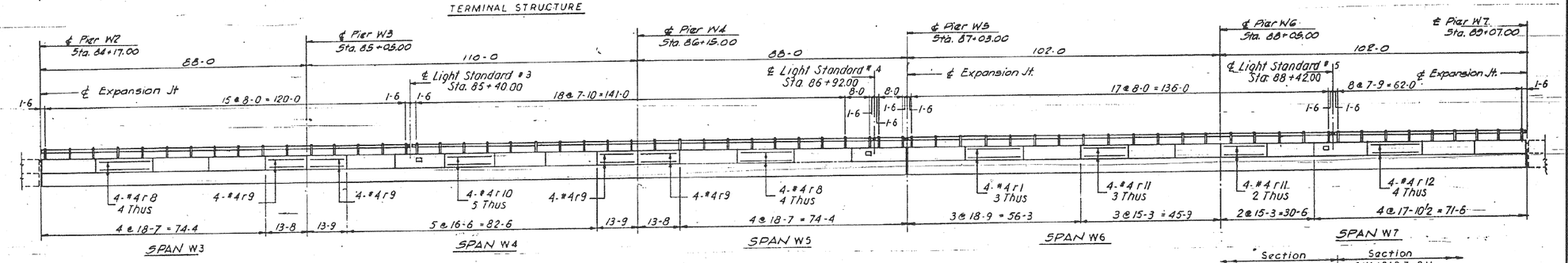

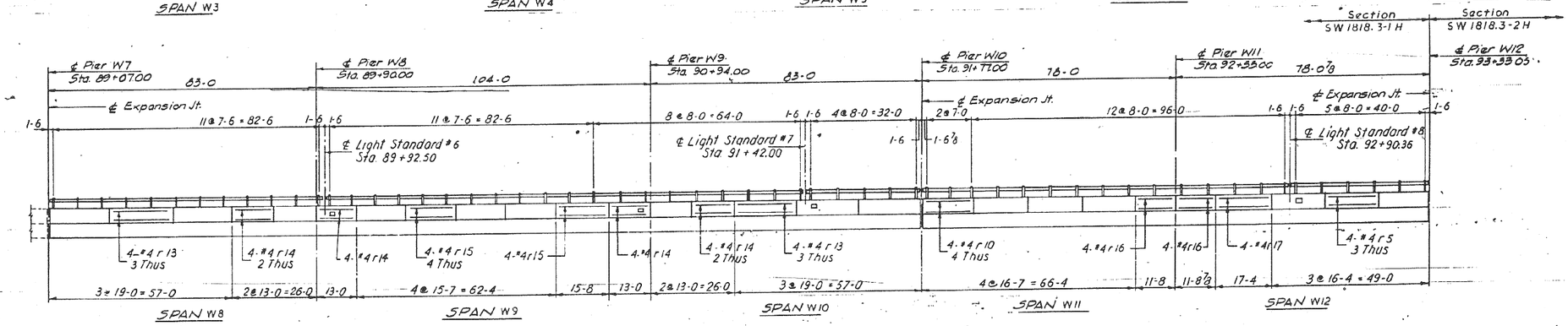

BILL OF MATERIAL
(This Sheet only)

DESCRIPTION	UNIT	QUANTITY
Reinforcement Bars	Lbs.	3218

Symbol ▫ indicates Junction Box

NORTH PARAPET S.W. ROADWAY
(LOOKING NORTH)

NOTE:
Elevation shown is a developed view
All dimensions are horizontal and along ℄ of Railing and are not true dimensions along surface of the Bridge.
All stations are along ℄ - S.W. Roadway

DESIGNED BY B. H.
DRAWN BY J. W. & V. T.
CHECKED BY A. M.
APPROVED BY K. A.

CITY OF CHICAGO
DEPARTMENT OF PUBLIC WORKS
BUREAU OF ENGINEERING
SOUTHWEST ROUTE SUPERHIGHWAY
ELEVATED HIGHWAY
S. PRAIRIE AVE. TO S. LAKE PARK AVE.
SECTION SW–1818.3–1H
PARAPET REINFORCEMENT DETAILS
SCALE: VERT. 3/16" = 1'-0; HORIZ. 1/16" = 1'-0 MAR. 1965
SHEET NO. S-26 OF 64 SHEETS

125-60L70_As-Builts.dgn

AECOM

USER NAME = auyeungh	DESIGNED -	REVISED -
	CHECKED -	REVISED -
PLOT SCALE =	DRAWN - HAY	REVISED -
PLOT DATE = 11/11/2014	CHECKED - ATB	REVISED -

STATE OF ILLINOIS
DEPARTMENT OF TRANSPORTATION

AS–BUILTS
SHEET NO. 25 OF 174 SHEETS

F.A.I. RTE.	SECTION	COUNTY	TOTAL SHEETS	SHEET NO.
55	2010-080-B	COOK	886	342
		CONTRACT NO. 60L70		
	ILLINOIS FED. AID PROJECT			

FOR INFORMATION ONLY

ROUTE NO.	SECTION	COUNTY	TOTAL SHEETS	SHEET NO.
F. A. L-55	SW-1818.3-1H	COOK	64	48
FED. ROAD DIV. NO. 4	ILLINOIS	PROJECT I-55-7(58)-286		

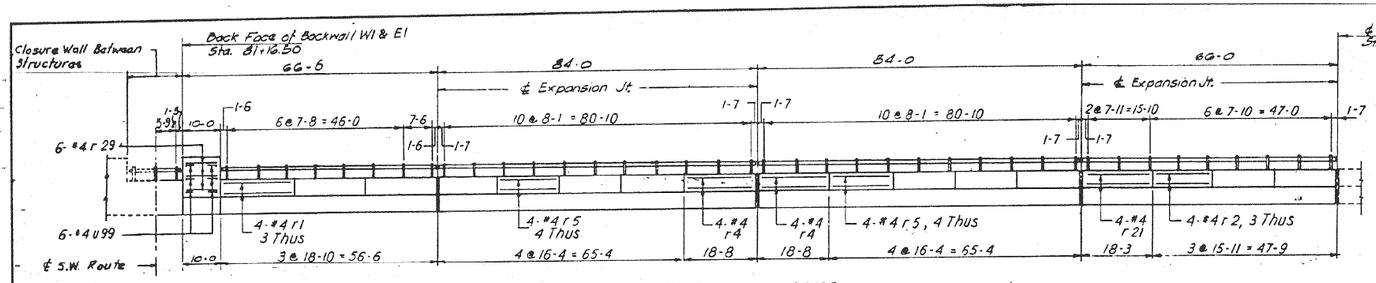

TERMINAL STRUCTURE

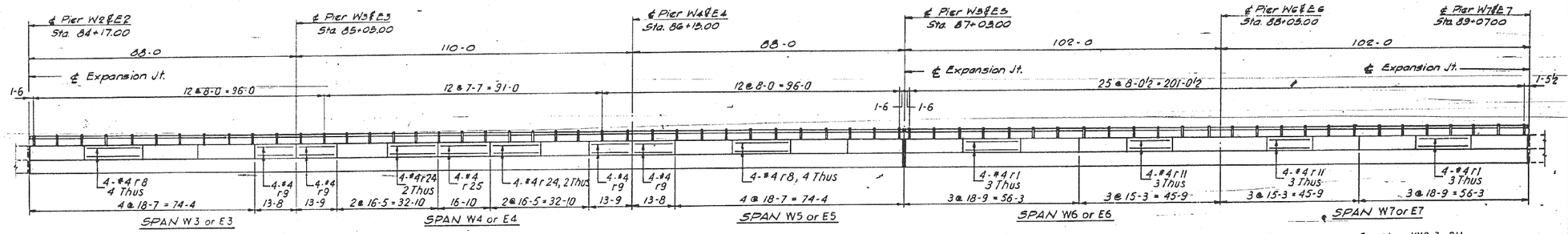

SPAN W3 or E3 — SPAN W4 or E4 — SPAN W5 or E5 — SPAN W6 or E6 — SPAN W7 or E7

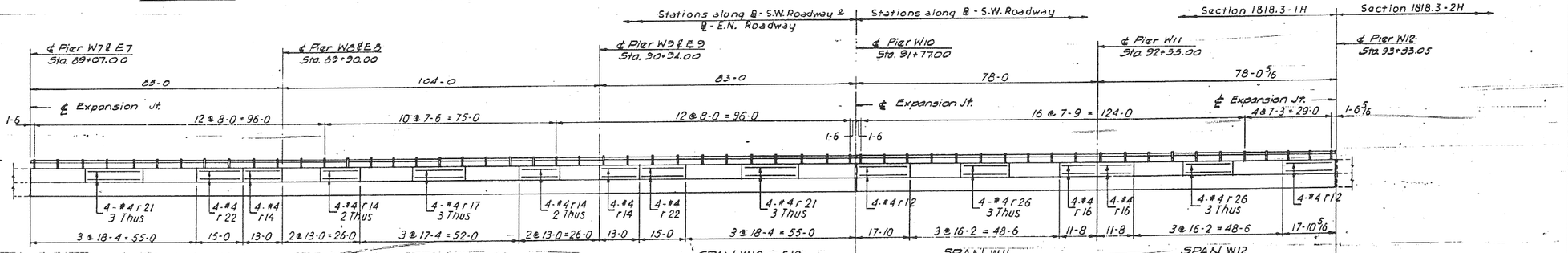

SPAN W8 or E8 — SPAN W9 or E9 — SPAN W10 or E10 — SPAN W11 — SPAN W12

S.W. Roadway only

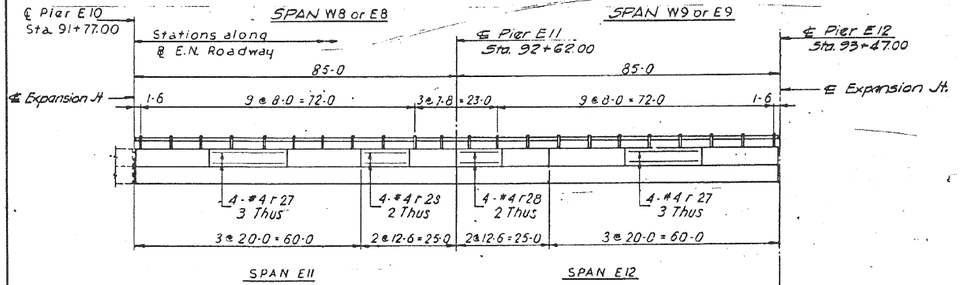

SPAN E11 — SPAN E12

NORTH PARAPET E.N. ROADWAY
(LOOKING NORTH)

SOUTH PARAPET S.W. ROADWAY
NORTH PARAPET E.N. ROADWAY (Except as shown)
(LOOKING NORTH)

BILL OF MATERIAL
(This Sheet only)

DESCRIPTION	UNIT	QUANTITY
Reinforcement Bars	Lbs	6470

NOTE:
Elevation shown is a developed view. All dimensions are horizontal and along ℄ of Railing and are not true dimensions along surface of the Bridge.

DESIGNED BY B.H.
DRAWN BY J.W. & T.V.
CHECKED BY A.M.
APPROVED BY K.A.

CITY OF CHICAGO
DEPARTMENT OF PUBLIC WORKS
BUREAU OF ENGINEERING

SOUTHWEST ROUTE SUPERHIGHWAY
ELEVATED HIGHWAY
S. PRAIRIE AVE. TO S. LAKE PARK AVE.
SECTION SW-1818.3-1H

PARAPET REINFORCEMENT DETAILS

SCALE: VERT. 3/16" = 1'-0; HORIZ. 1/16" = 1'-0 MAR. 1965
SHEET NO. 3-27 OF 64 SHEETS

126-60L70_As-Builts.dgn

AECOM

USER NAME = auyeungh	DESIGNED -	REVISED -
	CHECKED -	REVISED -
PLOT SCALE =	DRAWN - HAY	REVISED -
PLOT DATE = 11/11/2014	CHECKED - ATB	REVISED -

STATE OF ILLINOIS
DEPARTMENT OF TRANSPORTATION

AS-BUILTS
SHEET NO. 26 OF 174 SHEETS

F.A.I. RTE.	SECTION	COUNTY	TOTAL SHEETS	SHEET NO.
55	2010-080-B	COOK	886	343
		CONTRACT NO. 60L70		
	ILLINOIS	FED. AID PROJECT		

FOR INFORMATION ONLY

ROUTE NO.	SECTION	COUNTY	TOTAL SHEETS	SHEET NO.
F. A. I.—55	SW-1818.3-1H	COOK	64	46
FED. ROAD DIV. NO. 4	ILLINOIS	PROJECT I-55-7(58)-288		

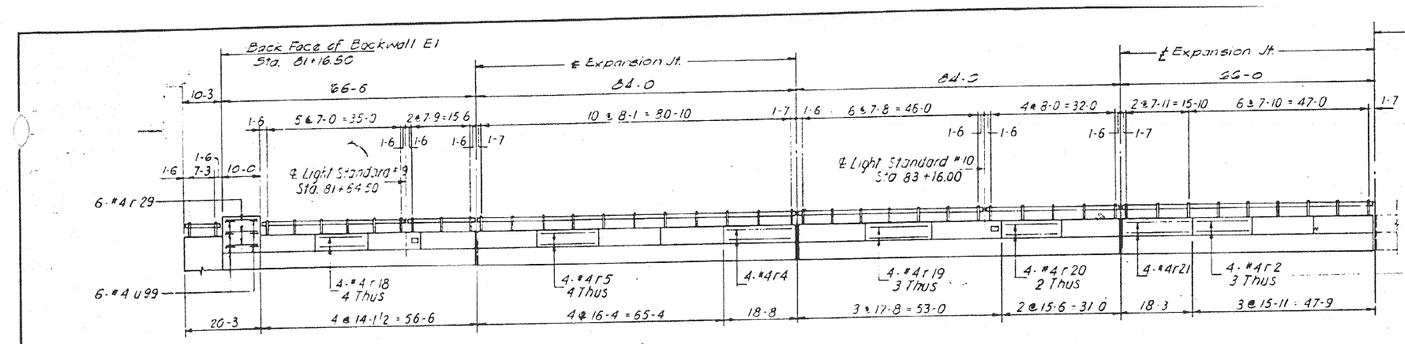

TERMINAL STRUCTURE

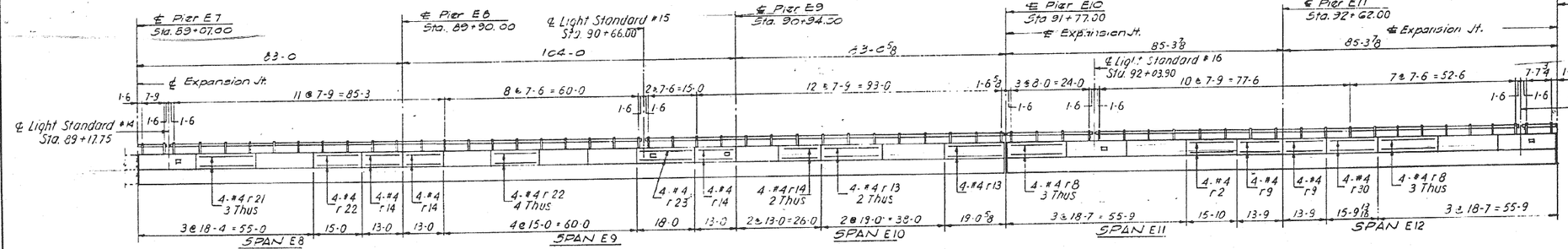

BILL OF MATERIAL

(This Sheet only)

DESCRIPTION	UNIT	QUANTITY
Reinforcement bars	Lbs.	3255

Symbol □ indicates Junction Box

SOUTH PARAPET E.N. ROADWAY

(LOOKING NORTH)

NOTE:
Elevation shown is a developed view.
All dimensions are horizontal and along ℄ of Railing and are not true dimensions along surface of the Bridge.
All stations are along ℄ E.N. Roadway

DESIGNED BY B. H.
DRAWN BY J. W.
CHECKED BY A.M.
APPROVED BY K.A.

CITY OF CHICAGO
DEPARTMENT OF PUBLIC WORKS
BUREAU OF ENGINEERING

SOUTHWEST ROUTE SUPERHIGHWAY
ELEVATED HIGHWAY
S. PRAIRIE AVE. TO S. LAKE PARK AVE.
SECTION SW-1818.3-1H

PARAPET REINFORCEMENT DETAILS

SCALE: VERT. 3/16" = 1'-0; HORIZ. 1/16" = 1'-0 MAR. 1965
SHEET NO. S-28 OF 64 SHEETS

127-60L70_As-Builts.dgn

AECOM	USER NAME = auyeungh	DESIGNED -	REVISED -
		CHECKED -	REVISED -
	PLOT SCALE =	DRAWN - HAY	REVISED -
	PLOT DATE = 11/11/2014	CHECKED - ATB	REVISED -

STATE OF ILLINOIS
DEPARTMENT OF TRANSPORTATION

AS-BUILTS

SHEET NO. 27 OF 174 SHEETS

F.A.I. RTE.	SECTION	COUNTY	TOTAL SHEETS	SHEET NO.
55	2010-080-B	COOK	886	344
		CONTRACT NO. 60L70		
		ILLINOIS FED. AID PROJECT		

FOR INFORMATION ONLY

ROUTE NO.	SECTION	COUNTY	TOTAL SHEETS	SHEET NO.
F. A. I. – 55	SW-1818.3-1H	COOK	62	47
FED. ROAD DIV. NO. 4	ILLINOIS	PROJECT I-88-7(8)-286		

DECK REINFORCEMENT PLAN 1

Bar	Nº	Size	Length	Shape
SW ROADWAY ONLY				
SPANS W3, W4, W5, W6 & W7				
a1	419	#6	26-2	
a2	419		33-10	
a3	419		22-8	
a4	419		37-8	
a5	419		36-1	
a6	419	#6	26-8	
a7	984	#4	5-10	
b1	448	#5	4-6	
b2	800	#5	36-8	
b3	24	#4	37-6	
b4	24	#4	13-5	
b5	18	#4	28-0	
b6	156	#6	30-0	
b7	600	#5	34-10	
b8	36	#4	29-6	
b9	12	#4	15-0	
b10	78	#6	33-3	
d1	984	#5	6-8	
d2	256	#5	3-2	
At Light Standards and Drainage Inlets				
a7	24	#4	5-10	
a46	6	#5	7-6	
a47	27	#5	4-6	
a48	18	#6	9-0	
a49	24	#6	6-6	
a50	60	#6	6-0	
d2	24	#5	3-2	
EN. ROADWAY ONLY				
SPANS E3, E4, E5, E6 & E7				
(All Bars are the same as for SW Road.)				

DECK REINFORCEMENT PLAN 2

Bar	Nº	Size	Length	Shape
SW ROADWAY ONLY				
SPANS W8 W9 W10, W11 & W12				
a1	303	#6	26-2	
a2	375		33-10	
a3	303		22-8	
a4	375		37-8	
a5	232		36-1	
a6	232	#6	26-8	
a7	856	#4	5-10	
a8	71	#6	35-1	
a9	143		27-8	
a10	72		27-7	
a11	72		24-1	
a12	72		31-7	
a13	72	#6	8-1	
b1	451	#5	4-6	
b11	800	#5	34-8	
b12	24	#4	35-4	
b13	12	#4	39-6	
b14	24	#4	12-9	
b15	156	#6	28-6	
b16	502	#5	31-10	
b17	24	#4	33-6	
b18	12	#4	11-5	
b19	78	#6	25-3	
d1	856	#5	6-8	
d2	228	#5	3-2	
At Light Standards and Drainage Inlets				
a7	24	#4	5-10	
a46	6	#5	7-6	
a47	27	#5	4-6	
a48	15	#6	9-0	
a49	20	#6	6-6	
a50	50	#6	6-0	
d2	24	#5	3-2	
EN ROADWAY ONLY				
SPANS E8, E9 & E10				
a1	232	#6	26-2	
a2	232		33-10	
a3	232		22-8	
a4	232		37-8	
a5	232		36-1	
a6	232	#6	26-8	
a7	526	#4	5-10	
a14	16	#4	3-6	
a15	16	#4	3-9	
a16	56	#6	3-6	
b1	224	#5	4-6	
b11	800	#5	34-8	
b12	24	#4	35-4	
b13	12	#4	39-6	
b14	25	#4	12-9	
b15	156	#6	28-6	
d1	542	#5	6-8	
d2	144	#5	3-2	
At Light Standards and Drainage Inlets				
a7	16	#4	5-10	
a46	4	#5	7-6	
a47	18	#5	4-6	
a48	12	#6	9-0	
a49	16	#6	6-6	
a50	40	#6	6-0	
d2	16	#5	3-2	

DECK REINFORCEMENT PLAN 3

Bar	Nº	Size	Length	Shape
EN ROADWAY ONLY				
SPANS E11 & E12				
a7	171	#4	5-10	
a17	145	#6	30-4	
a18	145		46-8	
a19	145		42-2	
a20	145		34-2	
a21	145		42-9	
a22	290	#6	21-0	
a23	171	#4	7-2	
b1	259	#5	4-6	
b20	570	#5	34-9	
b21	28	#4	36-8	
b22	6	#4	12-5	
b23	8	#4	13-6	
b24	90	#6	27-6	
d1	342	#5	6-8	
d2	92	#5	3-2	
At Light Standards and Drainage Inlets				
a23	16	#4	7-2	
a46	4	#5	7-6	
a47	18	#5	4-6	
a48	9	#6	9-0	
a49	12	#6	6-6	
a50	30	#6	6-0	
d2	16	#5	3-2	

PARAPET REINFORCEMENT

Bar	Nº	Size	Length	Shape
NORTH PARAPET SW ROADWAY				
r1	24	#4	18-6	
r2	12		15-7	
r3	8		17-10	
r4	4		18-4	
r5	28		16-0	
r6	12		16-9	
r7	4		14-5	
r8	32		18-3	
r9	16		13-5	
r10	36		16-3	
r11	20		15-0	
r12	12		17-7	
r13	24		18-8	
r14	24		12-8	
r15	20		15-4	
r16	8		11-5	
r17	4		17-0	
r29	6	#4	9-8	
u99	6	#4	3-9	
SOUTH PARAPET SW ROADWAY				
r1	36	#4	18-6	
r2	12		15-7	
r4	8		16-4	
r5	32		16-0	
r8	32		18-3	
r9	16		13-5	
r11	24		15-0	
r12	8		17-7	
r14	24		12-8	
r16	8		11-3	
r17	12		17-0	
r21	28		18-0	
r22	8		14-8	
r24	16		16-7	
r25	4		16-6	
r26	24		15-10	
r29	6	#4	9-8	
u99	6	#4	3-9	
NORTH PARAPET EN. ROADWAY				
r1	36	#4	18-6	
r2	12		15-7	
r4	8		16-4	
r5	32		16-0	
r8	32		16-3	
r9	16		13-5	
r11	24		15-0	
r14	24		12-8	
r17	12		17-0	
r21	28		18-0	
r22	8		14-8	
r24	16		16-1	
r25	4		16-6	
r27	24		19-8	
r28	16		12-2	
r29	6	#4	9-8	
u99	6	#4	3-9	
SOUTH PARAPET EN. ROADWAY				
r1	12	#6	18-6	
r2	16		15-7	
r4	4		18-4	
r5	16		16-0	
r8	36		18-3	
r9	24		13-5	
r10	20		16-3	
r11	20		15-0	
r12	16		17-7	
r13	12		18-8	
r14	20		12-8	
r18	16		13-10	
r19	12		17-4	
r20	8		15-2	
r21	16		18-0	
r22	20	#4	14-8	

Bar	Nº	Size	Length	Shape
SOUTH PARAPET EN. ROADWAY				
r23	4	#4	17-8	
r29	6	#4	9-8	
r30	4	#4	15-6	
u99	6	#4	3-9	

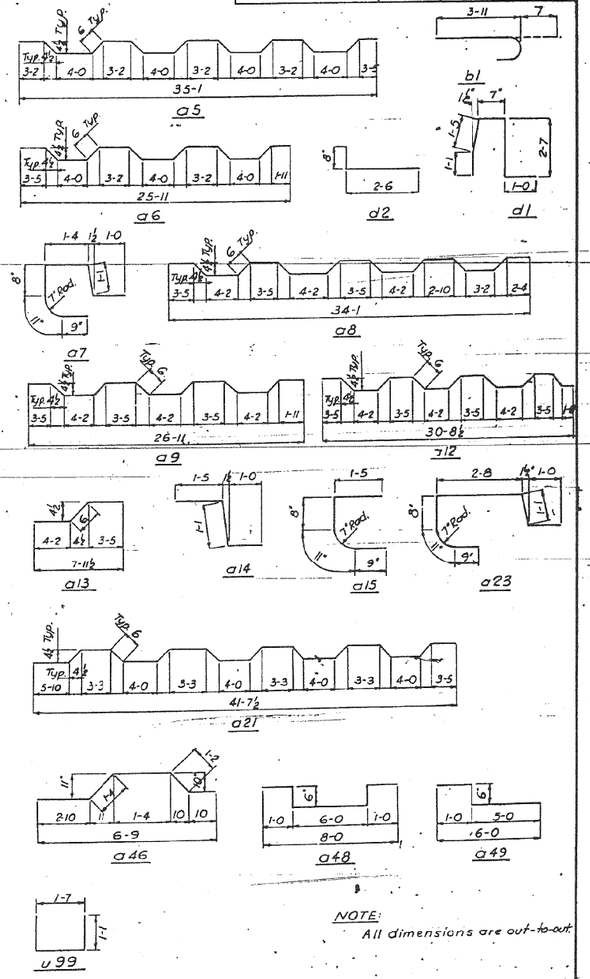

CITY OF CHICAGO
DEPARTMENT OF PUBLIC WORKS
BUREAU OF ENGINEERING

SOUTHWEST ROUTE SUPERHIGHWAY
ELEVATED HIGHWAY
S. PRAIRIE AVE. TO S. LAKE PARK AVE.
SECTION SW-1818.3-1H

DECK REINFORCEMENT BAR LISTS

SCALE: MAR. 1965

SHEET NO. 5-29 OF 64 SHEETS

DESIGNED BY B.H.
DRAWN BY B.B.
CHECKED BY B.H.
APPROVED BY K.A.

128-60L70_As-Builts.dgn

AECOM

USER NAME = auyeungh	DESIGNED -	REVISED -
	CHECKED -	REVISED -
PLOT SCALE =	DRAWN - HAY	REVISED -
PLOT DATE = 11/11/2014	CHECKED - ATB	REVISED -

STATE OF ILLINOIS
DEPARTMENT OF TRANSPORTATION

AS-BUILTS

SHEET NO. 28 OF 174 SHEETS

F.A.I. RTE.	SECTION	COUNTY	TOTAL SHEETS	SHEET NO.
55	2010-080-B	COOK	886	345
		CONTRACT NO. 60L70		
	ILLINOIS	FED. AID PROJECT		

FOR INFORMATION ONLY

ROUTE NO.	SECTION	COUNTY	TOTAL SHEETS	SHEET NO.
F. A. I. – 55	SW–1818.3–1H	COOK	64	48
FED. ROAD DIV. NO. 4	ILLINOIS	PROJECT 1–55–7(58)–288		

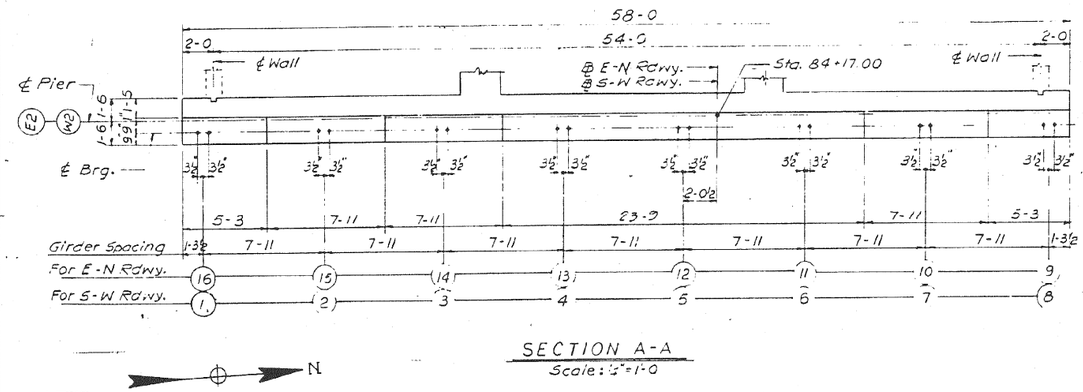

SECTION A-A
Scale: 1/8"=1'-0

Note:
For Anchor Bolt Setting
Detail see Sheet No S-10

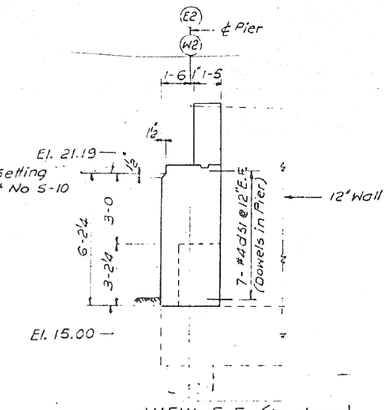

VIEW E-E (As shown)
VIEW F-F (Opp. Hand)

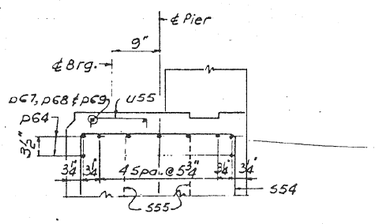

BAR SPACING IN CAP

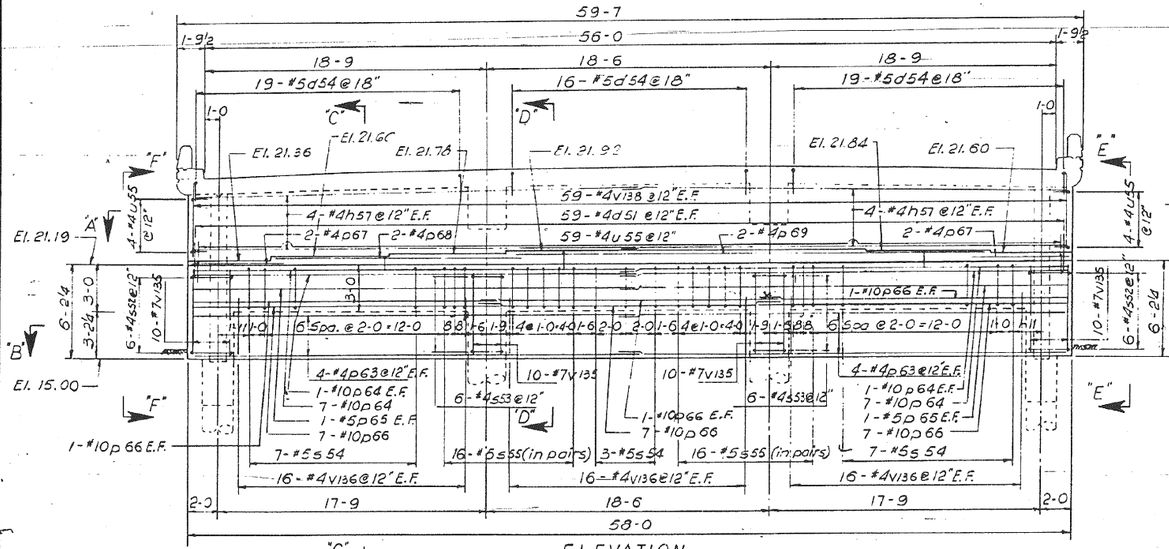

ELEVATION
Scale: 1/4"=1'-0

PIER-E2 AS SHOWN
PIER-W2 OPPOSITE HAND

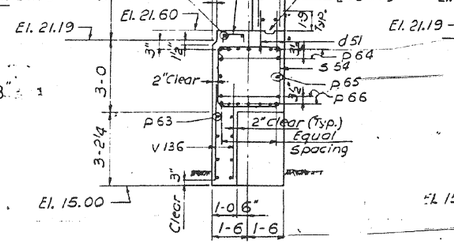

SECTION C-C
Scale: 3/8"=1'-0

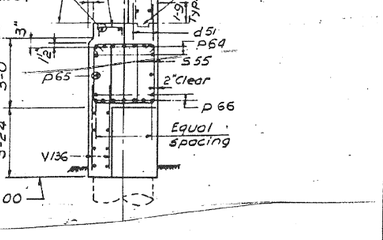

SECTION D-D
Scale: 3/8"=1'-0

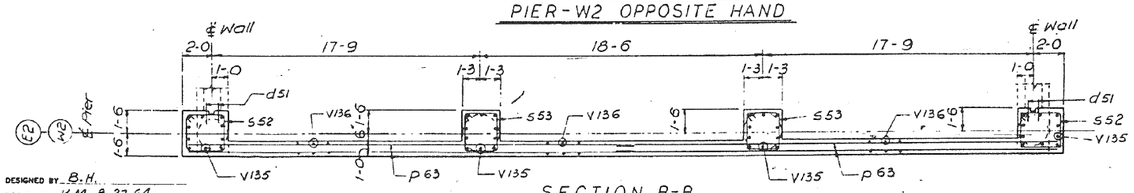

SECTION B-B
Scale: 1/4"=1'-0

Notes:
1. For Key Plan see Sheet No S-1
2. For Sub-Piers see Sheet No S-2
3. For Bar List see Sheet No S-35
4. Work this Sheet together with Sheets S-32 & S-34

BILL OF MATERIAL (FOR ONE PIER ONLY)

Description	Unit	Quantity
Class 'X' Concrete	Cu. Yds.	32.0
Reinforcement Bars	Lbs.	6,888
Class 'A' Excavation for Structures	Cu. Yds.	2.0

CITY OF CHICAGO
DEPARTMENT OF PUBLIC WORKS
BUREAU OF ENGINEERING

SOUTHWEST ROUTE SUPERHIGHWAY
ELEVATED HIGHWAY
S. PRAIRIE AVE. TO S. LAKE PARK AVE.
SECTION SW–1818.3–1H

TERMINAL STRUCTURE — PIERS

SCALE: AS NOTED
MAR. 1965

SHEET NO. S-30 OF 64 SHEETS

DESIGNED BY B.H.
DRAWN BY K.M. 8.27.64
CHECKED BY C.B.
APPROVED BY K.A.

129-60L70_As-Builts.dgn

AECOM

USER NAME = auyeungh	DESIGNED -	REVISED -
	CHECKED -	REVISED -
PLOT SCALE =	DRAWN - HAY	REVISED -
PLOT DATE = 11/11/2014	CHECKED - ATB	REVISED -

STATE OF ILLINOIS
DEPARTMENT OF TRANSPORTATION

AS–BUILTS

SHEET NO. 29 OF 174 SHEETS

F.A.I. RTE.	SECTION	COUNTY	TOTAL SHEETS	SHEET NO.
55	2010-080-B	COOK	886	346
		CONTRACT NO. 60L70		
	ILLINOIS FED. AID PROJECT			

FOR INFORMATION ONLY

ROUTE NO.	SECTION	COUNTY	TOTAL SHEETS	SHEET NO.
F. A. I.–55	SW-1818.3-1H	COOK	64	49
FED. ROAD DIV. NO. 4	ILLINOIS	PROJECT I-55-7(58)-286		

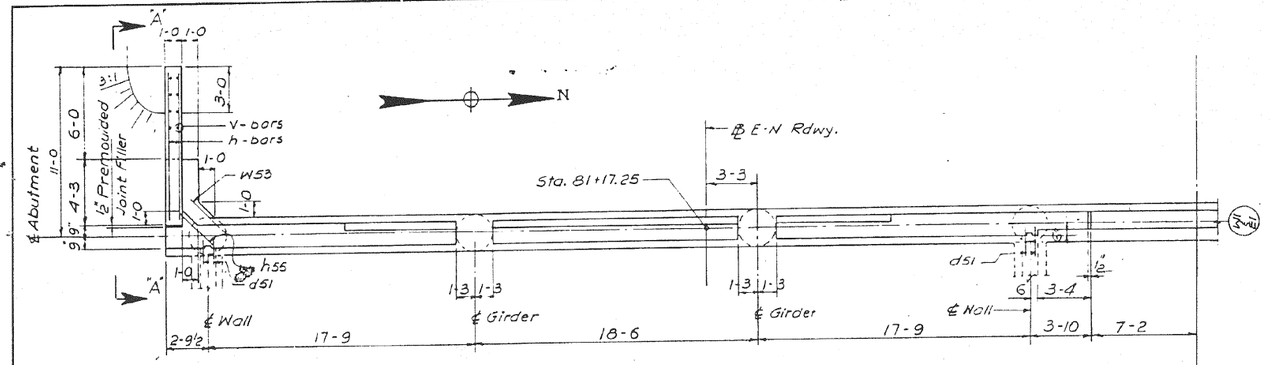

PLAN
Scale: 1⅛"=1'-0

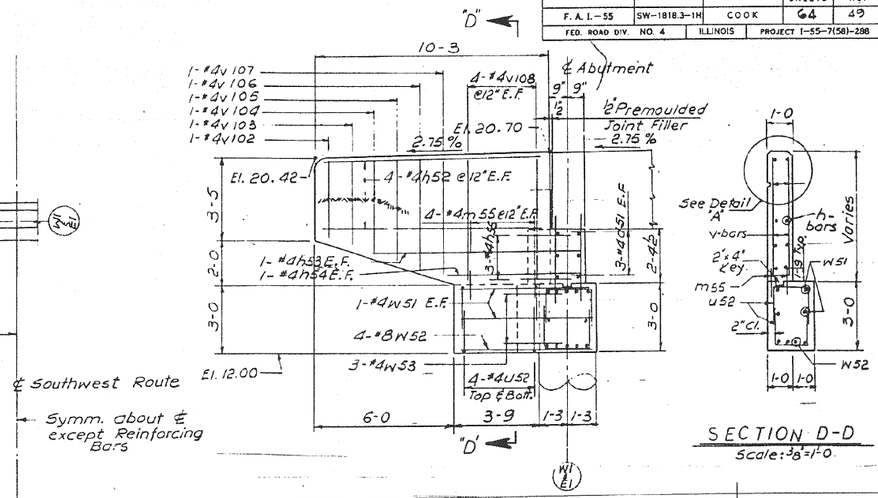

SECTION D-D
Scale: ⅜"=1'-0

℄ Southwest Route
Symm. about ℄ except Reinforcing Bars

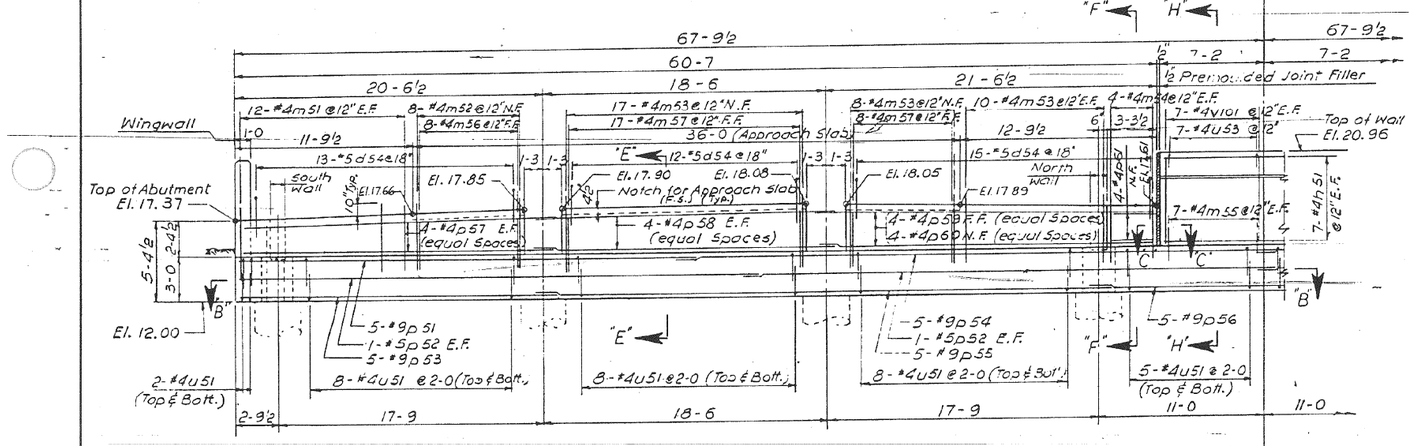

ELEVATION
Scale: ¼"=1'-0

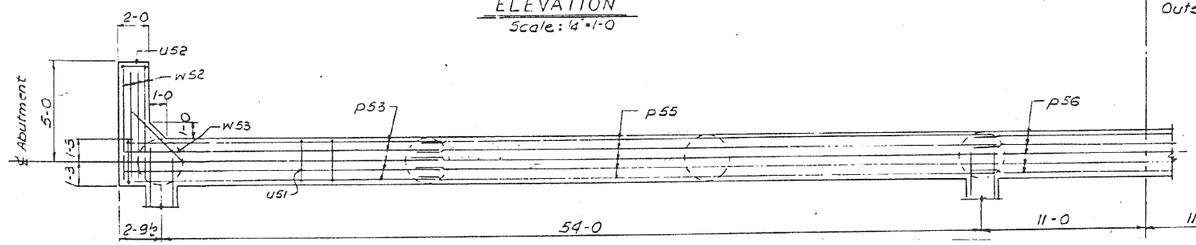

SECTION B-B
Scale: ¼"=1'-0

VIEW A-A
Scale: ⅜"=1'-0

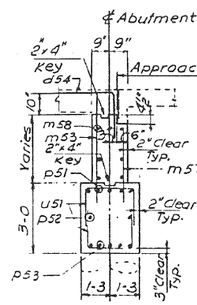

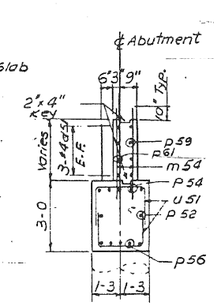

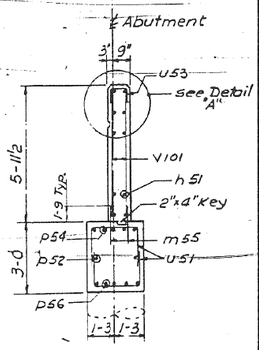

SECTION E-E
Scale: ⅜"=1'-0

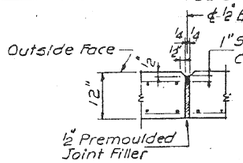

SECTION C-C

SECTION F-F
Scale: ⅜"=1'-0

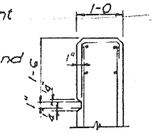

DETAIL "A"

SECTION H-H
Scale: ⅜"=1'-0

Notes:
1. For Key Plan see Sheet No S-1
2. Work this Sheet together with Sheets S-32 & S-33
3. For Bar List see Sheet No S-35
4. For Sub-Piers see Sheet No S-2

BILL OF MATERIAL		
Description	Unit	Quantity
Class "X" Concrete	Cu. Yds.	633
Reinforcement Bars	Lbs.	80471
Class "A" Excavation for Structure	Cu. Yds.	58.0

CITY OF CHICAGO
DEPARTMENT OF PUBLIC WORKS
BUREAU OF ENGINEERING

SOUTHWEST ROUTE SUPERHIGHWAY
ELEVATED HIGHWAY
S. PRAIRIE AVE. TO S. LAKE PARK AVE.
SECTION SW-1818.3-1H

TERMINAL STRUCTURE—ABUTMENTS

SCALE: AS NOTED
MAR. 1965
SHEET NO. S-31 OF 64 SHEETS

DESIGNED BY B.H
DRAWN BY K.M., B.J.d. G.d
CHECKED BY C.D
APPROVED BY K.A.

130-60L70_As-Builts.dgn

AECOM

USER NAME = auyeungh	DESIGNED -	REVISED -
	CHECKED -	REVISED -
PLOT SCALE =	DRAWN - HAY	REVISED -
PLOT DATE = 11/11/2014	CHECKED - ATB	REVISED -

STATE OF ILLINOIS
DEPARTMENT OF TRANSPORTATION

AS-BUILTS
SHEET NO. 30 OF 174 SHEETS

F.A.I. RTE.	SECTION	COUNTY	TOTAL SHEETS	SHEET NO.
55	2010-080-B	COOK	886	347
		CONTRACT NO. 60L70		
	ILLINOIS	FED. AID PROJECT		

FOR INFORMATION ONLY

ROUTE NO.	SECTION	COUNTY	TOTAL SHEETS	SHEET NO.
F. A. I.—55	SW-1818.3-1H	COOK	64	50
FED. ROAD DIV. NO. 4	ILLINOIS	PROJECT I-55-7(58)-288		

Note:
El. 'A' - shown Elevations for Walls 'A'
El. 'B' - shown Elevations for Walls 'B'
See Key Plan for Location

½" Chamfer
2"x4" Key
Reference Line
CONSTRUCTION JOINT

For Abutment Detail see Sheet No 5-30

℄ Sub-Pier (Typ.)

D see Sheet 5-33

℄ ½" Exp. Joint
1" Sealing Compound
½" Premolded Joint Filler
Inside Face
EXPANSION JOINT DETAIL

Outside face of Wall

Door & Frame incidental to cost of Class 'X' Concrete
DOOR DETAIL "A"

SECTION B-B

℄ ½" Expansion Joint & Match Line B-B

℄ ½" Expansion Joint

NOTE: For complete Pier Detail see Sheet No 5-29

cut Bars in field to clear opening for Door. Place remaining portion of 4 v 133 as shown

3'-0 x 7'-0 Door for Walls 'B' only. See Detail 'A'

ELEVATION
Scale: ¼"=1'-0

TYPICAL SECTION

BILL OF MATERIAL FOR ONE WALL ONLY			
Description	Unit	Quantity Wall A	Quantity Wall B
Class 'X' Concrete	Cu. Yds.	139.5	142.0
Reinforcement Bars	Lbs.	30,349	30,349
Class 'A' Excavation for Structure	Cu. Yds.	— 375.0 *	

* Includes Quantity for 2 walls 'A' & 2 walls 'B'

NOTES:
1. For Key Plan see Sheet No 5-1
2. For Sub-Piers see sheet No 5-2
3. For Reinforcement Bar List see Sheet 5-35
4. Work this Sheet together with Sheets No 5-30 & 5-31
5. For Excavation Limits see Sheet 5-34

KEY PLAN

CITY OF CHICAGO
DEPARTMENT OF PUBLIC WORKS
BUREAU OF ENGINEERING

SOUTHWEST ROUTE SUPERHIGHWAY
ELEVATED HIGHWAY
S. PRAIRIE AVE. TO S. LAKE PARK AVE.
SECTION SW-1818.3-1H

TERMINAL STRUCTURE—WALLS

SCALE: AS NOTED — MAR. 1965

SHEET NO. 5-32 OF 64 SHEETS

DESIGNED BY B.H
DRAWN BY J. W.
CHECKED BY K. M.
APPROVED BY K. A.

131-60L70_As-Builts.dgn

AECOM

USER NAME = auyeungh	DESIGNED -	REVISED -
	CHECKED -	REVISED -
PLOT SCALE =	DRAWN - HAY	REVISED -
PLOT DATE = 11/11/2014	CHECKED - ATB	REVISED -

STATE OF ILLINOIS
DEPARTMENT OF TRANSPORTATION

AS-BUILTS

SHEET NO. 31 OF 174 SHEETS

F.A.I. RTE.	SECTION	COUNTY	TOTAL SHEETS	SHEET NO.
55	2010-080-B	COOK	886	348
		CONTRACT NO. 60L70		
	ILLINOIS FED. AID PROJECT			

FOR INFORMATION ONLY

ROUTE NO.	SECTION	COUNTY	TOTAL SHEETS	SHEET NO.
F. A. I.—55	SW—1818.3—1H	COOK	64	31
FED. ROAD DIV. NO. 4	ILLINOIS	PROJECT I-55-7(58)-288		

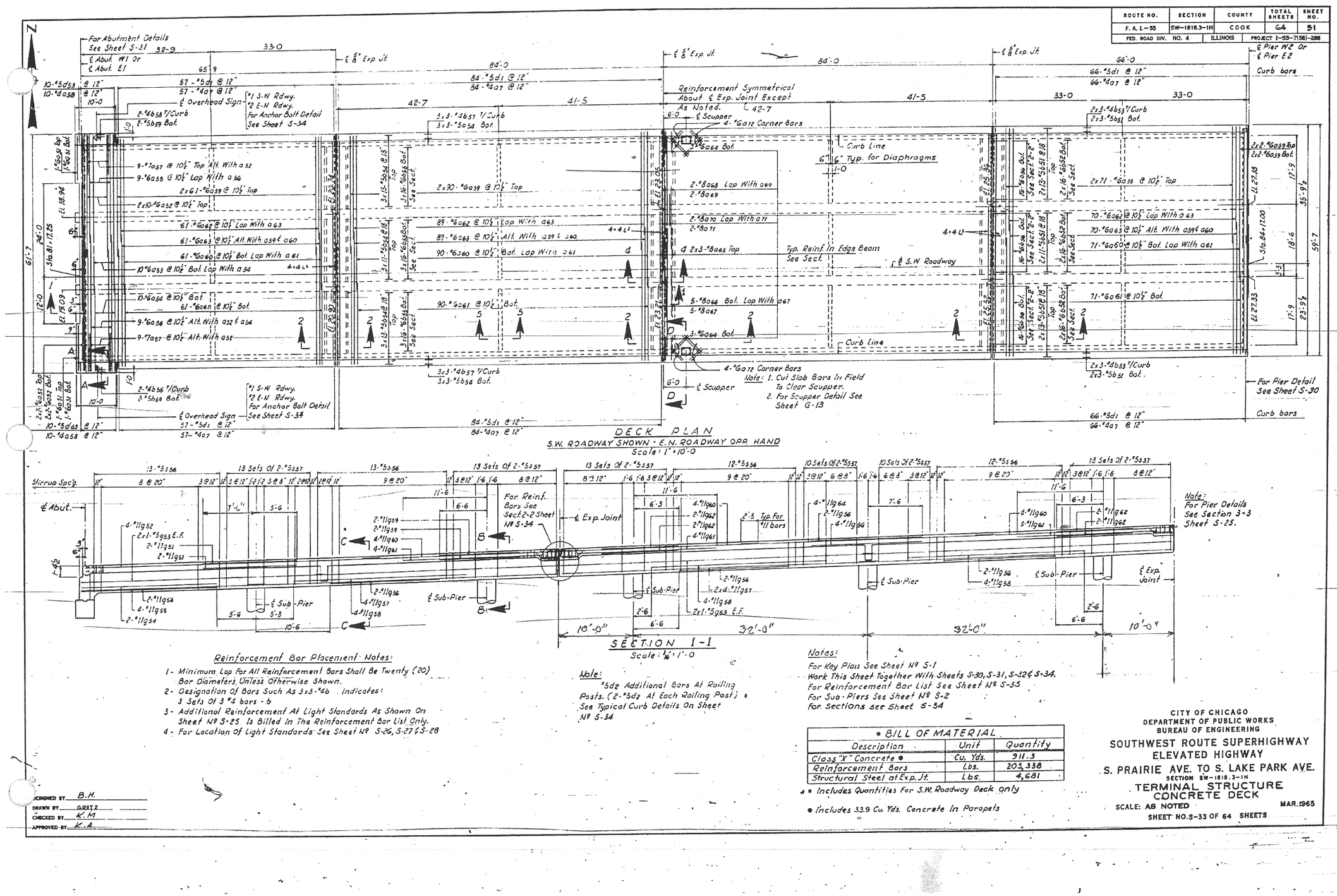

Reinforcement Bar Placement Notes:

1- Minimum Lap For All Reinforcement Bars Shall Be Twenty (20) Bar Diameters Unless Otherwise Shown.
2- Designation Of Bars Such As 3x3-*6b Indicates: 3 Sets Of 3 #4 bars - b
3- Additional Reinforcement At Light Standards As Shown On Sheet № S-25 Is Billed In The Reinforcement Bar List Only.
4- For Location Of Light Standards See Sheet № S-26, S-27 & S-28

Note:
*5d2 Additional Bars At Railing Posts. (2-*5d2 At Each Railing Post) See Typical Curb Details On Sheet № S-34

Notes:
For Key Plan See Sheet № S-1
Work This Sheet Together With Sheets S-30, S-31, S-32 & S-34.
For Reinforcement Bar List See Sheet № S-35
For Sub-Piers See Sheet № S-2
For Sections See Sheet S-34

* BILL OF MATERIAL

Description	Unit	Quantity
Class "X" Concrete ●	Cu. Yds.	911.3
Reinforcement Bars	Lbs.	205,338
Structural Steel at Exp. Jt.	Lbs.	4,681

* Includes Quantities For S.W. Roadway Deck only
● Includes 33.9 Cu. Yds. Concrete In Parapets

DESIGNED BY B.H.
DRAWN BY G.R.T.
CHECKED BY K.M.
APPROVED BY K.A.

CITY OF CHICAGO
DEPARTMENT OF PUBLIC WORKS
BUREAU OF ENGINEERING

SOUTHWEST ROUTE SUPERHIGHWAY ELEVATED HIGHWAY

S. PRAIRIE AVE. TO S. LAKE PARK AVE.

SECTION SW-1818.3-1H

TERMINAL STRUCTURE CONCRETE DECK

SCALE: AS NOTED MAR. 1965
SHEET NO. S-33 OF 64 SHEETS

132-60L70_As-Builts.dgn

AECOM

USER NAME = auyeungh	DESIGNED -	REVISED -
	CHECKED -	REVISED -
PLOT SCALE =	DRAWN - HAY	REVISED -
PLOT DATE = 11/11/2014	CHECKED - ATB	REVISED -

STATE OF ILLINOIS
DEPARTMENT OF TRANSPORTATION

AS-BUILTS
SHEET NO. 32 OF 174 SHEETS

F.A.I. RTE.	SECTION	COUNTY	TOTAL SHEETS	SHEET NO.
55	2010-080-B	COOK	886	349
		CONTRACT NO. 60L70		
	ILLINOIS FED. AID PROJECT			

FOR INFORMATION ONLY

F. A. I.–55	SW–1818.3–1H	COOK	64	52
FED. ROAD DIV. NO. 4	ILLINOIS	PROJECT I–55–7(58)–288		

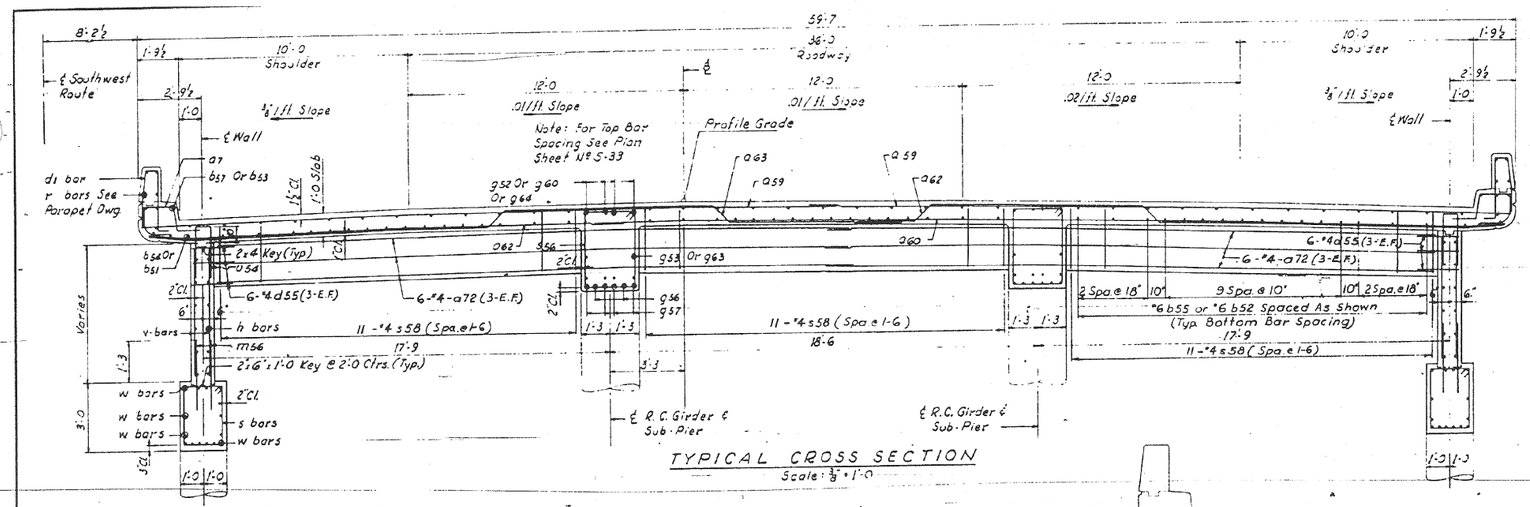

TYPICAL CROSS SECTION
Scale: 3/8" = 1'-0

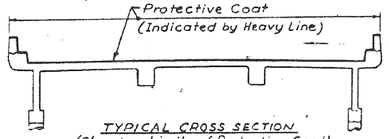

TYPICAL CROSS SECTION
(Showing Limits of Protective Coat)
(No Scale)

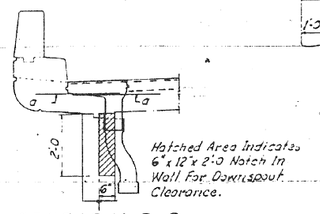

SECTION O-O
Scale: 1/2" = 1'-0

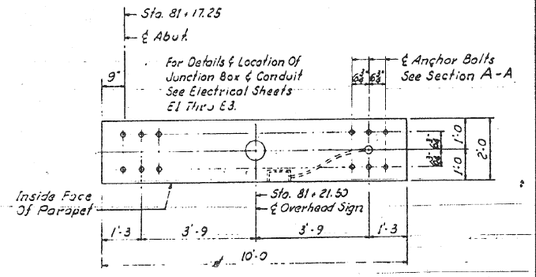

PLAN - SIGN SUPPORT ANCHORAGE DETAILS
Scale: 1/2" = 1'-0

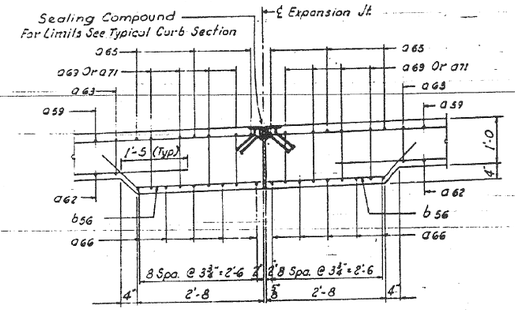

SECTION 2-2
Scale: 3/4" = 1'-0

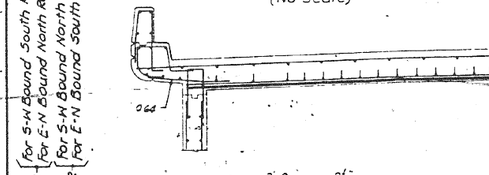

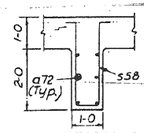

SECTION 5-5
Scale: 1/2" = 1'-0

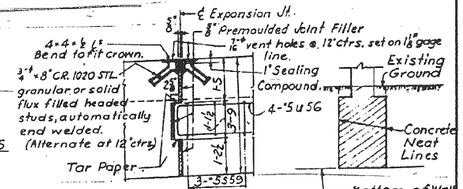

SECTION 4-4
Scale: 1/2" = 1'-0

PAY LIMITS
Class "A" Excavations for Structures

NOTE: Concrete Deck & Girder shall be poured monolithically between Expansion Joints.

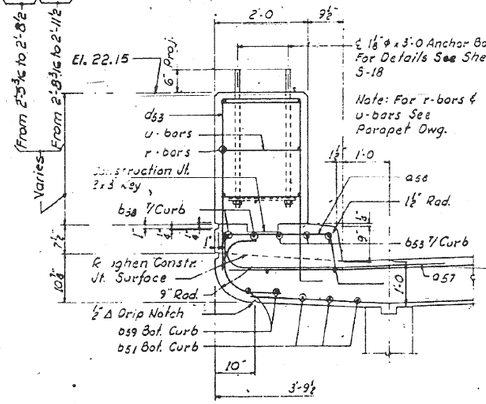

SECTION A-A
Scale: 3/8" = 1'-0

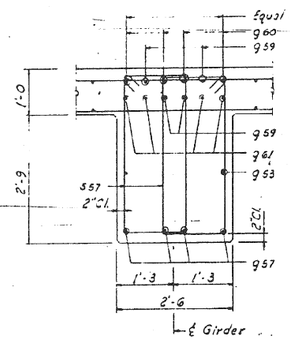

SECTION B-B
Scale: 3/8" = 1'-0

SECTION THRU EDGE BEAM
Scale: 3/4" = 1'-0

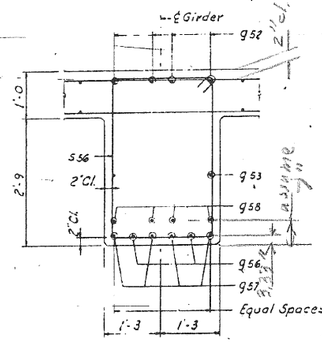

SECTION C-C
Scale: 3/8" = 1'-0

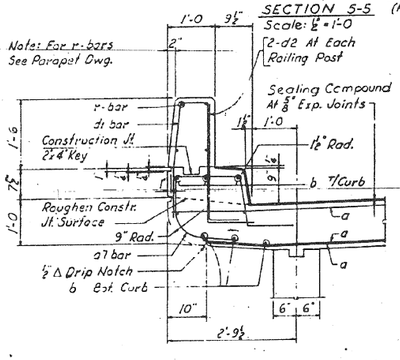

TYPICAL CURB SECTION
Scale: 3/4" = 1'-0

CITY OF CHICAGO
DEPARTMENT OF PUBLIC WORKS
BUREAU OF ENGINEERING

SOUTHWEST ROUTE SUPERHIGHWAY
ELEVATED HIGHWAY
S. PRAIRIE AVE. TO S. LAKE PARK AVE.
SECTION SW–1818.3–1H

TERMINAL STRUCTURE — SECTIONS

SCALE: AS NOTED — MAR. 1965

SHEET NO. S-34 OF 64 SHEETS

DESIGNED BY B.N
DRAWN BY GRITZ
CHECKED BY K.M.
APPROVED BY K.A

(for S-W Bound South Railing / for E-N Bound North Railing / for S-W Bound North Railing / for E-N Bound South Railing)

133-60L70_As-Builts.dgn

AECOM

USER NAME = auyeungh	DESIGNED -	REVISED -
	CHECKED -	REVISED -
PLOT SCALE =	DRAWN - HAY	REVISED -
PLOT DATE = 11/11/2014	CHECKED - ATB	REVISED -

STATE OF ILLINOIS
DEPARTMENT OF TRANSPORTATION

AS–BUILTS

SHEET NO. 33 OF 174 SHEETS

F.A.I. RTE.	SECTION	COUNTY	TOTAL SHEETS	SHEET NO.
55	2010-080-B	COOK	886	350
		CONTRACT NO. 60L70		
	ILLINOIS FED. AID PROJECT			

FOR INFORMATION ONLY

F. A. I.—55	SW—1818.3—1H	COOK	64	34
FED. ROAD DIV. NO. 4	ILLINOIS	PROJECT I—55—7(56)—288		

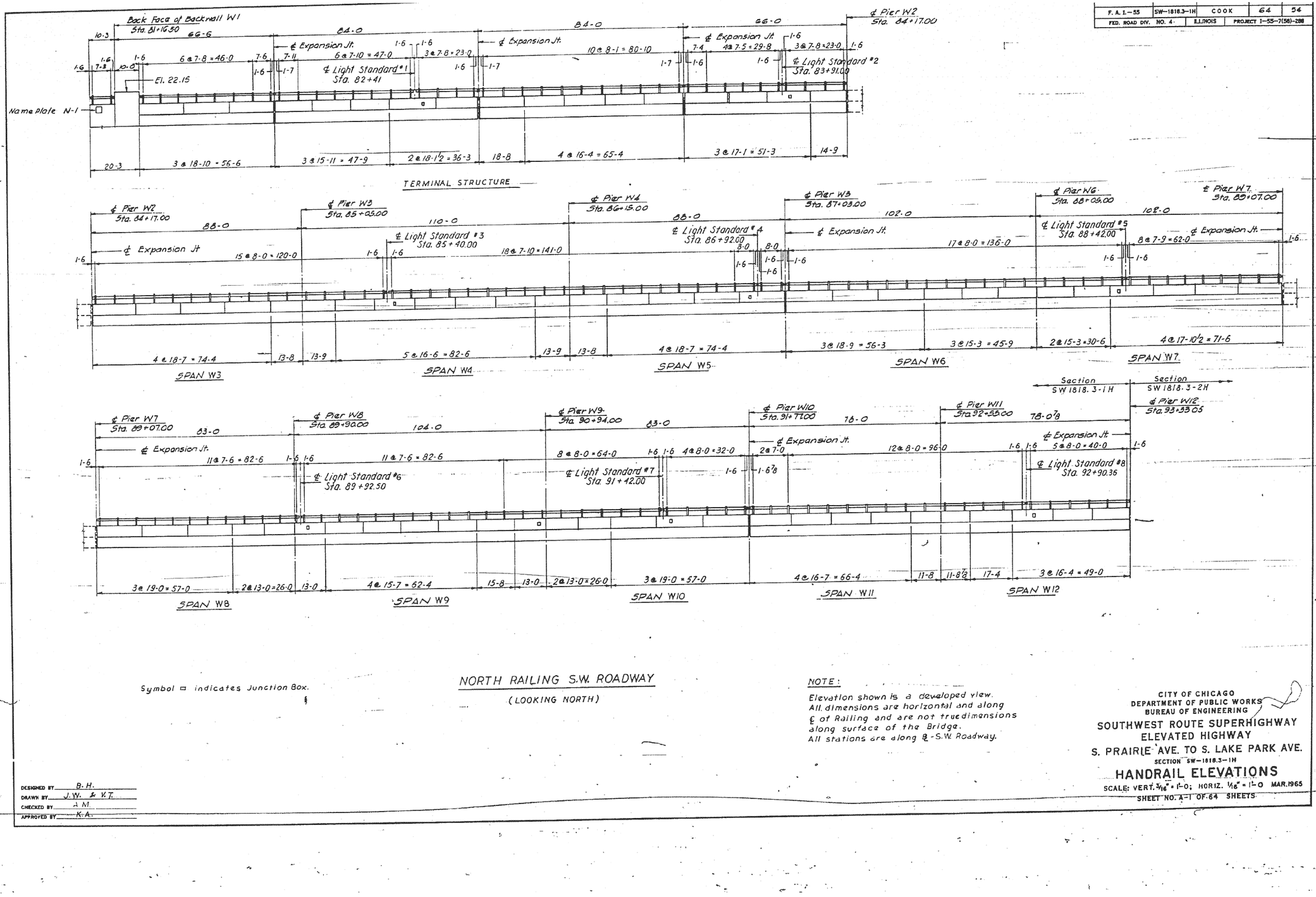

Symbol □ indicates Junction Box.

NORTH RAILING S.W. ROADWAY

(LOOKING NORTH)

NOTE:

Elevation shown is a developed view.
All dimensions are horizontal and along ℄ of Railing and are not true dimensions along surface of the Bridge.
All stations are along ℄ - S.W. Roadway.

DESIGNED BY B. H.
DRAWN BY J. W. & V. T.
CHECKED BY A. M.
APPROVED BY K. A.

CITY OF CHICAGO
DEPARTMENT OF PUBLIC WORKS
BUREAU OF ENGINEERING

SOUTHWEST ROUTE SUPERHIGHWAY
ELEVATED HIGHWAY
S. PRAIRIE AVE. TO S. LAKE PARK AVE.
SECTION SW—1818.3—1H

HANDRAIL ELEVATIONS

SCALE: VERT. 3/16" = 1'-0; HORIZ. 1/8" = 1'-0 MAR. 1965
SHEET NO. A-1 OF 64 SHEETS

134-60L70_As-Builts.dgn

AECOM				STATE OF ILLINOIS DEPARTMENT OF TRANSPORTATION	AS-BUILTS	F.A.I. RTE.	SECTION	COUNTY	TOTAL SHEETS	SHEET NO.
	USER NAME = auyeungh	DESIGNED -	REVISED -			55	2010-080-B	COOK	886	351
		CHECKED -	REVISED -		SHEET NO. 34 OF 174 SHEETS			CONTRACT NO. 60L70		
	PLOT SCALE =	DRAWN - HAY	REVISED -					ILLINOIS	FED. AID PROJECT	
	PLOT DATE = 11/11/2014	CHECKED - ATB	REVISED -							

FOR INFORMATION ONLY

ROUTE NO.	SECTION	COUNTY	TOTAL SHEETS	SHEET NO.
F. A. I.—55	SW—1818.3—1H	COOK	64	55
FED. ROAD DIV. NO. 4	ILLINOIS	PROJECT I-55-7(58)-288		

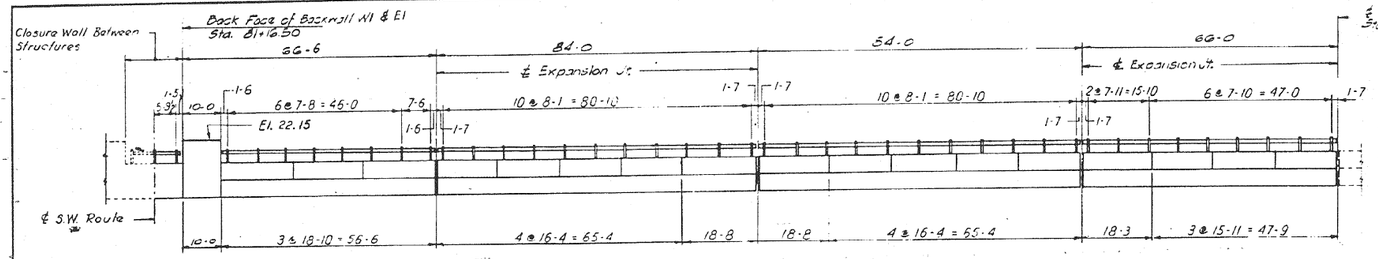

TERMINAL STRUCTURE

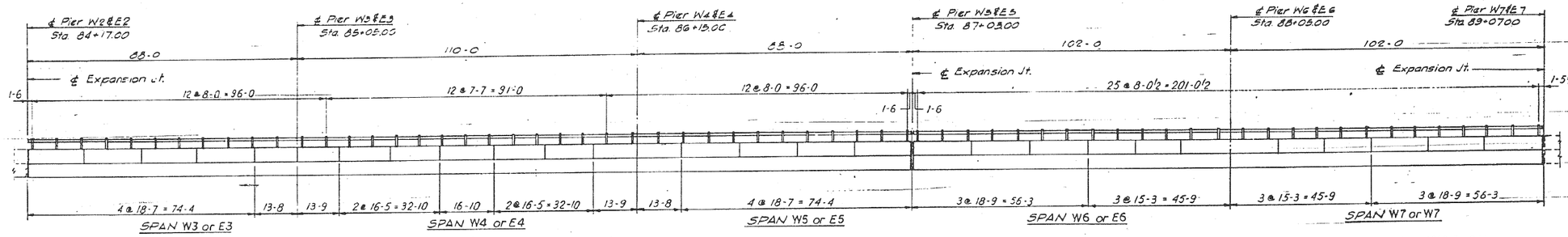

SPAN W3 or E3 — SPAN W4 or E4 — SPAN W5 or E5 — SPAN W6 or E6 — SPAN W7 or W7

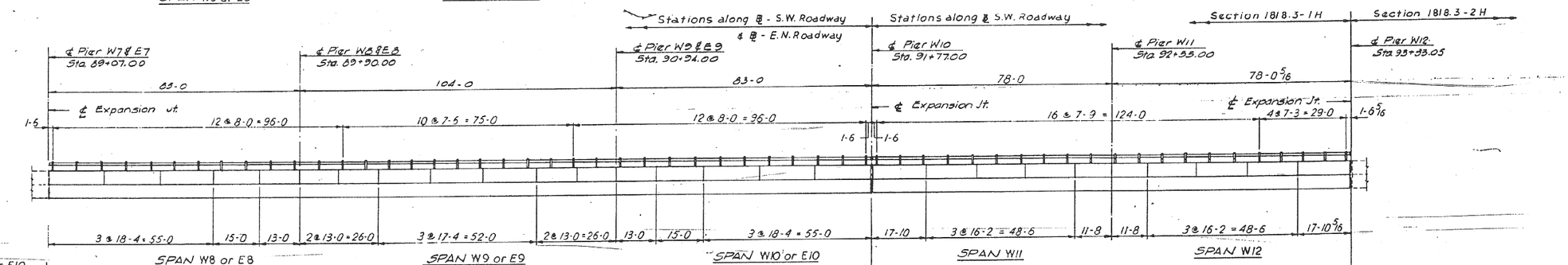

SPAN W8 or E8 — SPAN W9 or E9 — SPAN W10 or E10 — SPAN W11 — SPAN W12

S.W. Roadway only

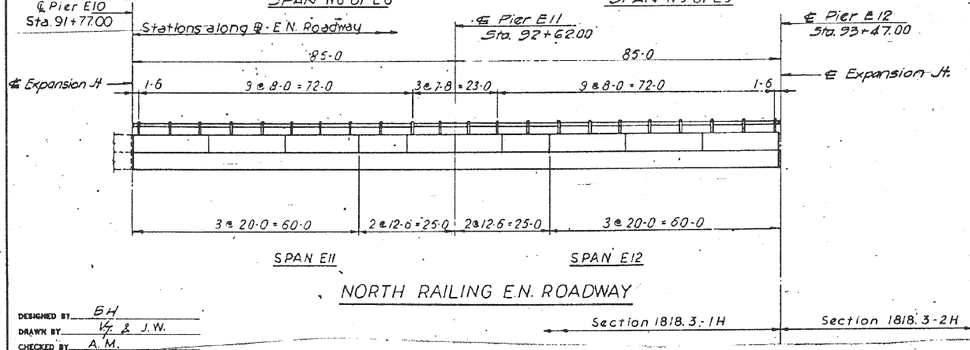

SPAN E11 — SPAN E12

NORTH RAILING E.N. ROADWAY

SOUTH RAILING S.W. ROADWAY

NORTH RAILING E.N. ROADWAY (Except as shown)

(LOOKING NORTH)

NOTE:
Elevation shown is a developed view. All dimensions are horizontal and along ℄ of Railing and are not true dimensions along surface of the Bridge.

DESIGNED BY BH
DRAWN BY VK & J.W.
CHECKED BY A.M.
APPROVED BY KA

Section 1818.3-1H — Section 1818.3-2H

CITY OF CHICAGO
DEPARTMENT OF PUBLIC WORKS
BUREAU OF ENGINEERING

SOUTHWEST ROUTE SUPERHIGHWAY
ELEVATED HIGHWAY
S. PRAIRIE AVE. TO S. LAKE PARK AVE.
SECTION SW-1818.3-1H

HANDRAIL ELEVATIONS

SCALE: VERT. 3/16" = 1'-0"; HORIZ. 1/16" = 1'-0" MAR. 1965
SHEET NO. A-2 OF 64 SHEETS

135-60L70_As-Builts.dgn

AECOM

USER NAME = auyeungh	DESIGNED -	REVISED -
	CHECKED -	REVISED -
PLOT SCALE =	DRAWN - HAY	REVISED -
PLOT DATE = 11/11/2014	CHECKED - ATB	REVISED -

STATE OF ILLINOIS
DEPARTMENT OF TRANSPORTATION

AS-BUILTS

SHEET NO. 35 OF 174 SHEETS

F.A.I. RTE.	SECTION	COUNTY	TOTAL SHEETS	SHEET NO.
55	2010-080-B	COOK	886	352
		CONTRACT NO. 60L70		
	ILLINOIS FED. AID PROJECT			

FOR INFORMATION ONLY

ROUTE NO.	SECTION	COUNTY	TOTAL SHEETS	SHEET NO.
F. A. I.-55	SW-1818.3-1H	COOK	64	36
FED. ROAD DIV. NO. 4	ILLINOIS	PROJECT I-55-7(58)-288		

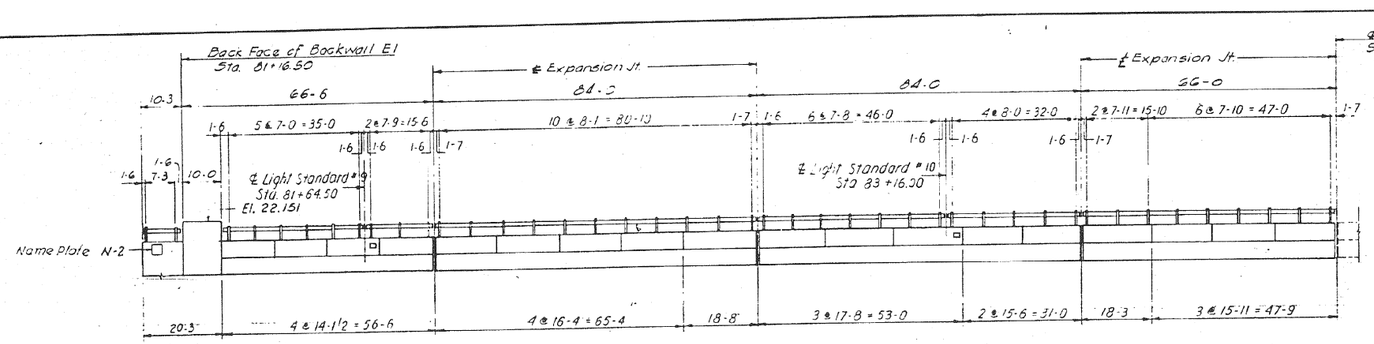

TERMINAL STRUCTURE

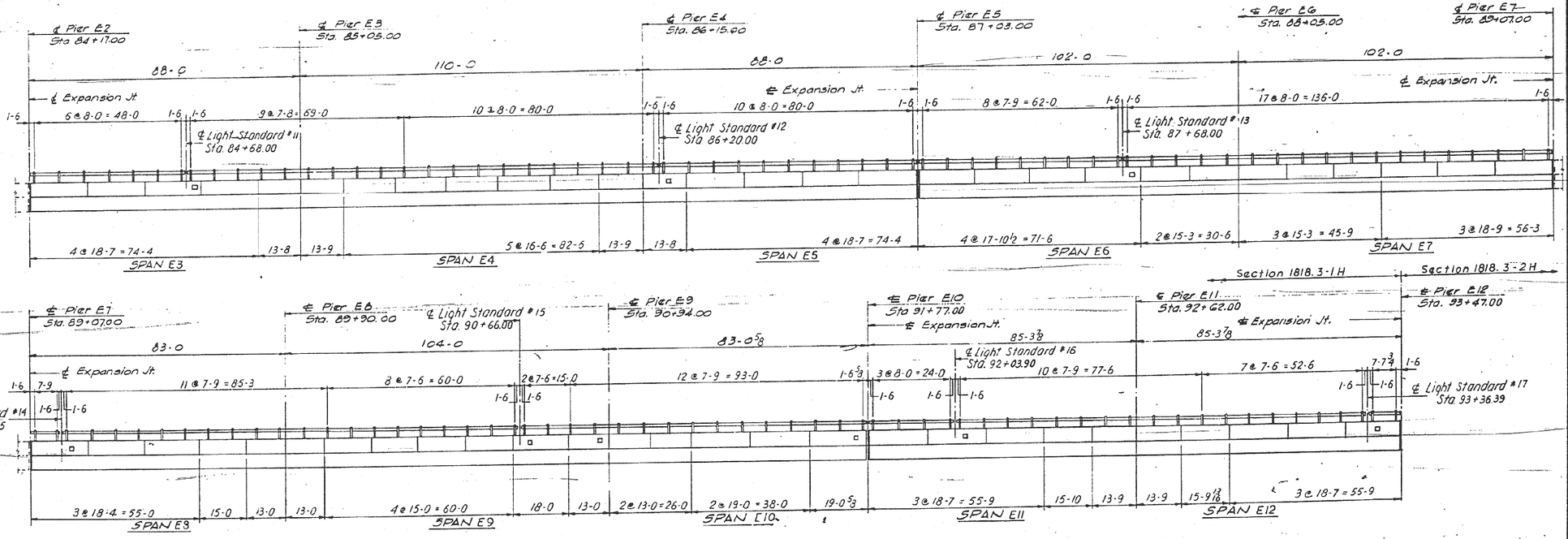

Symbol □ indicates Junction Box

SOUTH RAILING E.N. ROADWAY
(LOOKING NORTH)

NOTE:
Elevation shown is a developed view. All dimensions are horizontal and along ℄ of Railing and are not true dimensions along surface of the Bridge. All stations are along ℄ E.N. Roadway.

CITY OF CHICAGO
DEPARTMENT OF PUBLIC WORKS
BUREAU OF ENGINEERING

SOUTHWEST ROUTE SUPERHIGHWAY
ELEVATED HIGHWAY
S. PRAIRIE AVE. TO S. LAKE PARK AVE.
SECTION SW-1818.3-1H

HANDRAIL ELEVATIONS

SCALE: VERT. 3/16" = 1'-0; HORIZ: 1/16" = 1'-0 MAR 1965
SHEET NO. A-3 OF 64 SHEETS

DESIGNED BY B. H.
DRAWN BY J. W. & Y. T.
CHECKED BY A. M.
APPROVED BY K. A.

136-60L70_As-Builts.dgn

AECOM

USER NAME = auyeungh	DESIGNED -	REVISED -
	CHECKED -	REVISED -
PLOT SCALE =	DRAWN - HAY	REVISED -
PLOT DATE = 11/11/2014	CHECKED - ATB	REVISED -

STATE OF ILLINOIS
DEPARTMENT OF TRANSPORTATION

AS-BUILTS
SHEET NO. 36 OF 174 SHEETS

F.A.I. RTE.	SECTION	COUNTY	TOTAL SHEETS	SHEET NO.
55	2010-080-B	COOK	886	353
		CONTRACT NO. 60L70		
	ILLINOIS	FED. AID PROJECT		

FOR INFORMATION ONLY

ROUTE NO.	SECTION	COUNTY	TOTAL SHEETS	SHEET NO.
F. A. I.—55	SW-1818.3-1H	COOK	64	57
FED. ROAD DIV. NO. 4	ILLINOIS	PROJECT I-55-7(58-288		

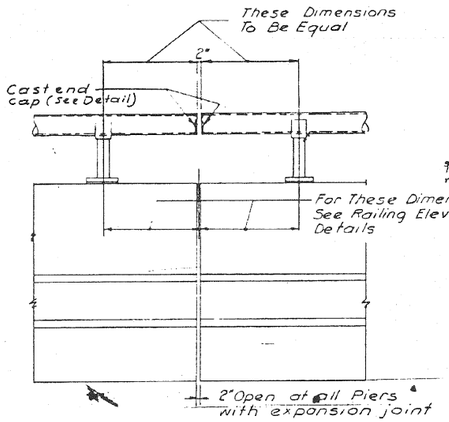

POSTS AT JOINTS OVER PIERS
Scale . 1"=1-0

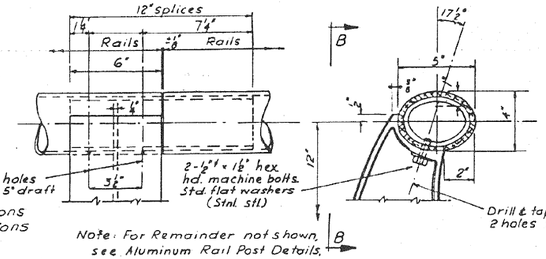

VIEW B-B SECTION A-A

RAIL POST DETAILS
(Metal)

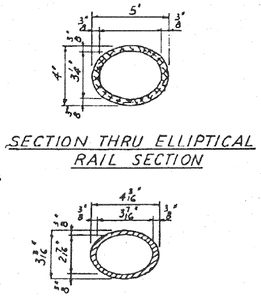

SECTION THRU ELLIPTICAL RAIL SECTION

SECTION THRU SPLICE

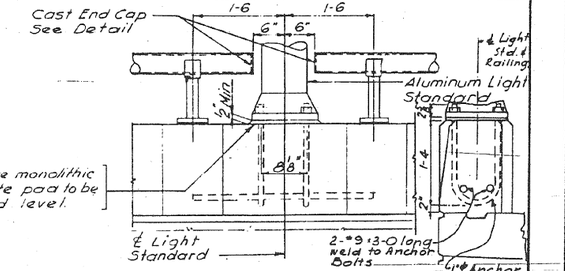

POST AT LIGHT STANDARD
Scale : 1"=1'-0"

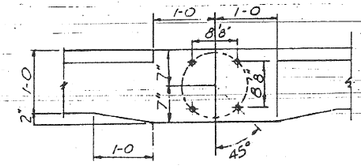

PLAN
Scale . 1"=1'-0"

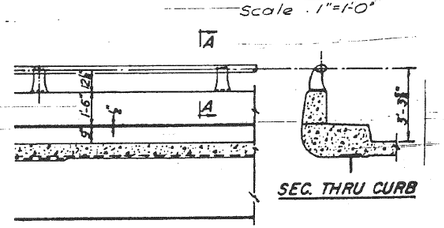

SEC. THRU CURB

ELEVATION

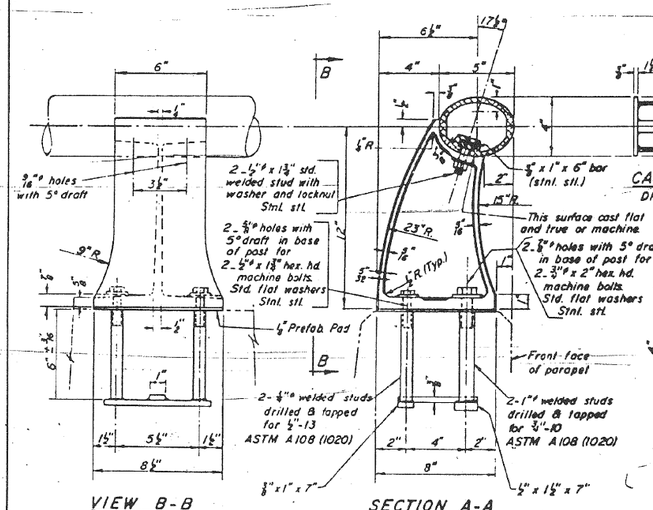

VIEW B-B SECTION A-A

RAIL POST DETAILS
(Aluminum)

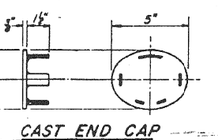

CAST END CAP
DRIVE FIT TYPE
Required

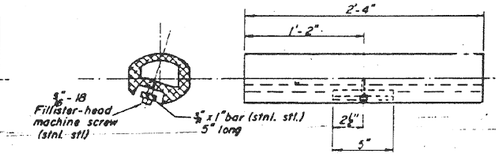

RAIL SPLICE

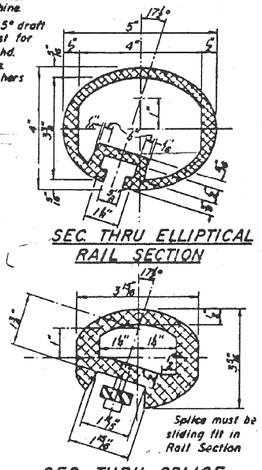

SEC. THRU ELLIPTICAL RAIL SECTION

SEC. THRU SPLICE

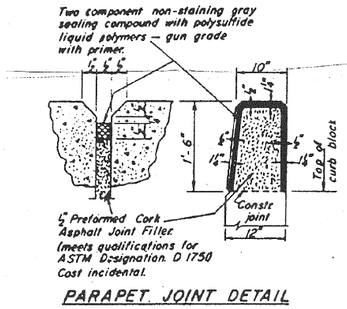

PARAPET JOINT DETAIL

NOTES

All Posts shall be normal to parapet. Handrail shall extend a minimum of 2 panel lengths (attached to minimum of 3 posts) except at ends or at open joints where a minimum of 1 panel length is required. All joints in r iling must be spliced per detail.

Cost of rail splice, end caps and hardware to be incidental to the pay item for Handrail. The Details shown on this sheet apply to both Aluminum Handrail and Metal Handrail. See Special Provisions for these alternate types.
All Aluminum Alloy Extruded Rail shall conform to ASTM specification B-235 alloy 6061-T6, or 6062-T6.
See Special Provisions for following Material Specifications:
Cast Aluminum Alloy Bridge Post-Alloy 344-T4
Stainless Steel Welded Stud Bolts, Washers and Locknuts.

BILL OF MATERIAL

Item	Unit	Quantity
HANDRAIL	Lin. Ft.	4093

CITY OF CHICAGO
DEPARTMENT OF PUBLIC WORKS
BUREAU OF ENGINEERING

SOUTHWEST ROUTE SUPERHIGHWAY
ELEVATED HIGHWAY
S. CALUMET AVE. TO S. LAKE PARK AVE.
SECTION SW-1818.3-1H

HANDRAIL DETAILS

SCALE: AS NOTED
MAR. 1965
SHEET NO. A-4 OF 64 SHEETS

137-60L70_As-Builts.dgn

AECOM

USER NAME = auyeungh	DESIGNED -	REVISED -
	CHECKED -	REVISED -
PLOT SCALE =	DRAWN - HAY	REVISED -
PLOT DATE = 11/11/2014	CHECKED - ATB	REVISED -

STATE OF ILLINOIS
DEPARTMENT OF TRANSPORTATION

AS-BUILTS
SHEET NO. 37 OF 174 SHEETS

F.A.I. RTE.	SECTION	COUNTY	TOTAL SHEETS	SHEET NO.
55	2010-080-B	COOK	886	354
		CONTRACT NO. 60L70		
	ILLINOIS FED. AID PROJECT			

FOR INFORMATION ONLY

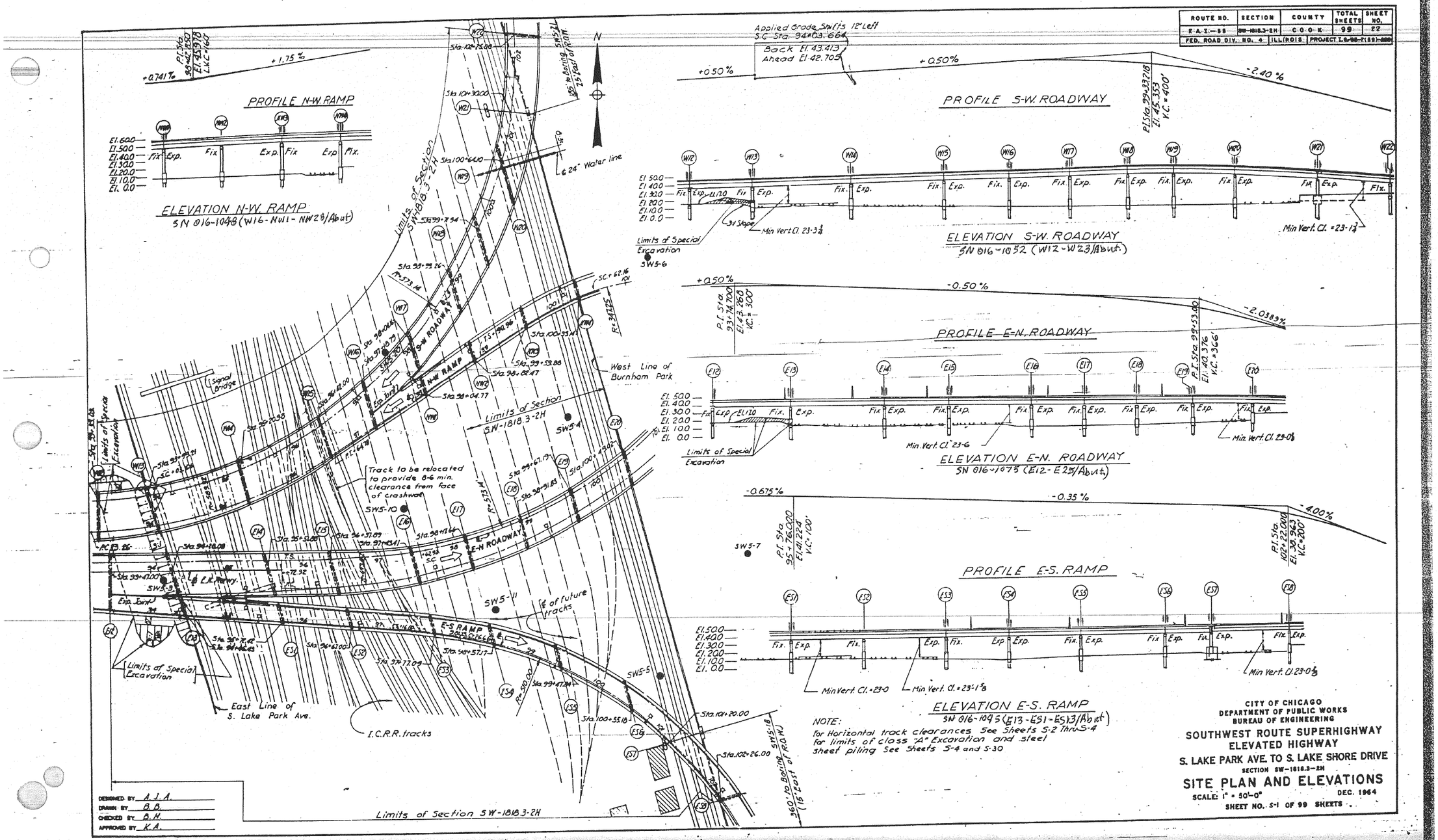

201-60L70_As-Builts.dgn

AECOM	USER NAME = auyeungh	DESIGNED -	REVISED -	STATE OF ILLINOIS DEPARTMENT OF TRANSPORTATION	AS-BUILTS	F.A.I. RTE.	SECTION	COUNTY	TOTAL SHEETS	SHEET NO.
		CHECKED -	REVISED -			55	2010-080-B	COOK	886	355
	PLOT SCALE =	DRAWN - HAY	REVISED -					CONTRACT NO. 60L70		
	PLOT DATE = 11/11/2014	CHECKED - ATB	REVISED -		SHEET NO. 38 OF 174 SHEETS		ILLINOIS	FED. AID PROJECT		

FOR INFORMATION ONLY

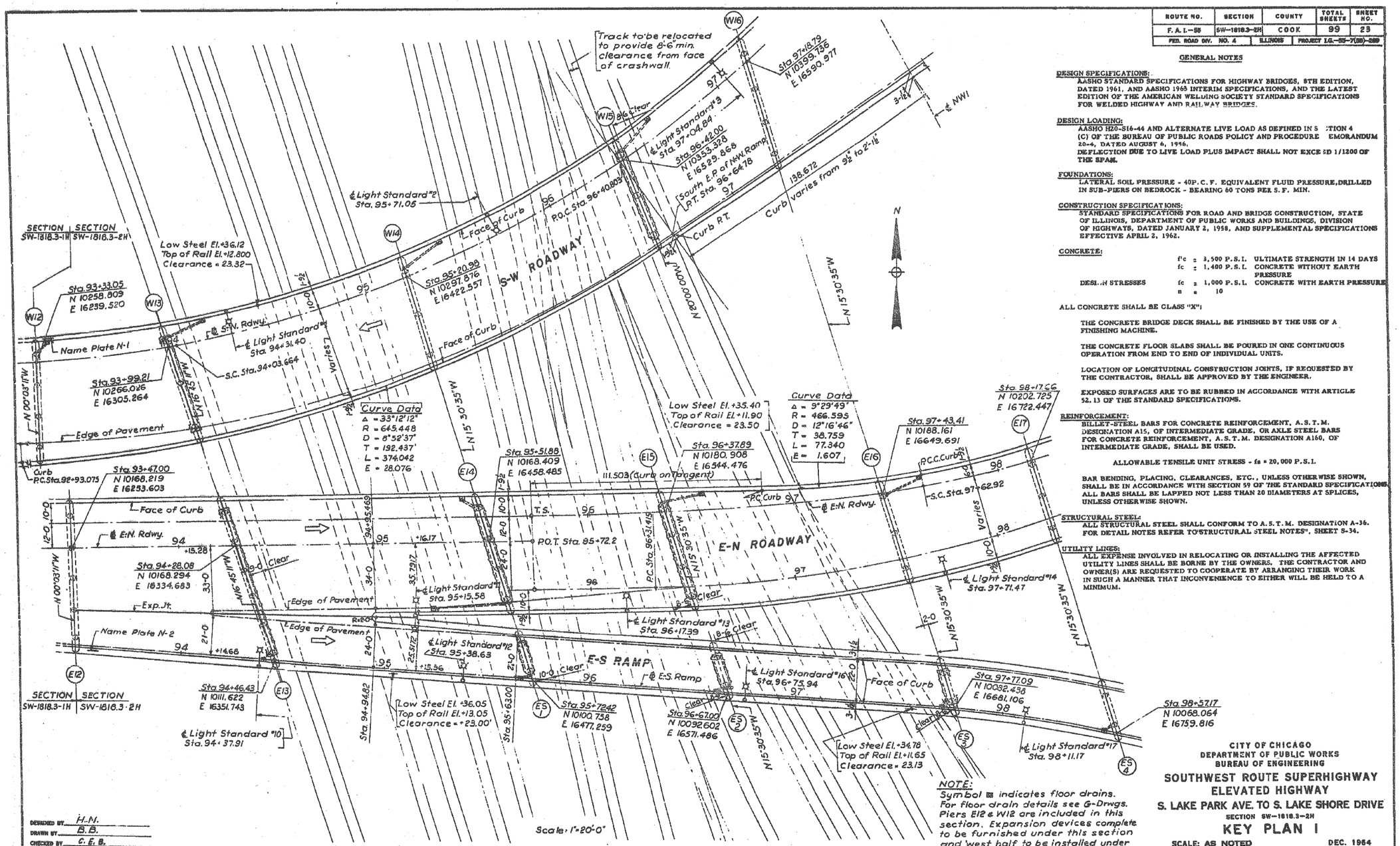

ROUTE NO.	SECTION	COUNTY	TOTAL SHEETS	SHEET NO.
F. A. I.—55	SW-1818.3-2H	COOK	99	23
FED. ROAD DIV. NO. 4	ILLINOIS	PROJECT I.G.—55-7(139)-269		

GENERAL NOTES

DESIGN SPECIFICATIONS:
AASHO STANDARD SPECIFICATIONS FOR HIGHWAY BRIDGES, 8TH EDITION, DATED 1961, AND AASHO 1965 INTERIM SPECIFICATIONS, AND THE LATEST EDITION OF THE AMERICAN WELDING SOCIETY STANDARD SPECIFICATIONS FOR WELDED HIGHWAY AND RAILWAY BRIDGES.

DESIGN LOADING:
AASHO H20-S16-44 AND ALTERNATE LIVE LOAD AS DEFINED IN S :TION 4 (C) OF THE BUREAU OF PUBLIC ROADS POLICY AND PROCEDURE EMORANDUM 20-4, DATED AUGUST 6, 1956.
DEFLECTION DUE TO LIVE LOAD PLUS IMPACT SHALL NOT EXCE ED 1/1200 OF THE SPAN.

FOUNDATIONS:
LATERAL SOIL PRESSURE - 40P.C.F. EQUIVALENT FLUID PRESSURE, DRILLED IN SUB-PIERS ON BEDROCK - BEARING 60 TONS PER S.F. MIN.

CONSTRUCTION SPECIFICATIONS:
STANDARD SPECIFICATIONS FOR ROAD AND BRIDGE CONSTRUCTION, STATE OF ILLINOIS, DEPARTMENT OF PUBLIC WORKS AND BUILDINGS, DIVISION OF HIGHWAYS, DATED JANUARY 2, 1958, AND SUPPLEMENTAL SPECIFICATIONS EFFECTIVE APRIL 2, 1962.

CONCRETE:

	f'c = 3,500 P.S.I.	ULTIMATE STRENGTH IN 14 DAYS
	fc = 1,400 P.S.I.	CONCRETE WITHOUT EARTH PRESSURE
DESIGN STRESSES	fc = 1,000 P.S.I.	CONCRETE WITH EARTH PRESSURE
	n = 10	

ALL CONCRETE SHALL BE CLASS "X";

THE CONCRETE BRIDGE DECK SHALL BE FINISHED BY THE USE OF A FINISHING MACHINE.

THE CONCRETE FLOOR SLABS SHALL BE POURED IN ONE CONTINUOUS OPERATION FROM END TO END OF INDIVIDUAL UNITS.

LOCATION OF LONGITUDINAL CONSTRUCTION JOINTS, IF REQUESTED BY THE CONTRACTOR, SHALL BE APPROVED BY THE ENGINEER.

EXPOSED SURFACES ARE TO BE RUBBED IN ACCORDANCE WITH ARTICLE 52.13 OF THE STANDARD SPECIFICATIONS.

REINFORCEMENT:
BILLET-STEEL BARS FOR CONCRETE REINFORCEMENT, A.S.T.M. DESIGNATION A15, OF INTERMEDIATE GRADE, OR AXLE STEEL BARS FOR CONCRETE REINFORCEMENT, A.S.T.M. DESIGNATION A160, OF INTERMEDIATE GRADE, SHALL BE USED.

ALLOWABLE TENSILE UNIT STRESS - fs = 20,000 P.S.I.

BAR BENDING, PLACING, CLEARANCES, ETC., UNLESS OTHERWISE SHOWN, SHALL BE IN ACCORDANCE WITH SECTION 59 OF THE STANDARD SPECIFICATIONS. ALL BARS SHALL BE LAPPED NOT LESS THAN 20 DIAMETERS AT SPLICES, UNLESS OTHERWISE SHOWN.

STRUCTURAL STEEL:
ALL STRUCTURAL STEEL SHALL CONFORM TO A.S.T.M. DESIGNATION A-36. FOR DETAIL NOTES REFER TO "STRUCTURAL STEEL NOTES", SHEET S-34.

UTILITY LINES:
ALL EXPENSE INVOLVED IN RELOCATING OR INSTALLING THE AFFECTED UTILITY LINES SHALL BE BORNE BY THE OWNERS. THE CONTRACTOR AND OWNER(S) ARE REQUESTED TO COOPERATE BY ARRANGING THEIR WORK IN SUCH A MANNER THAT INCONVENIENCE TO EITHER WILL BE HELD TO A MINIMUM.

NOTE:
Symbol ⊠ indicates floor drains. For floor drain details see G-Drwgs. Piers E12 & W12 are included in this section. Expansion devices complete to be furnished under this section and west half to be installed under section SW-1818.3-1H

——— indicates permanent steel sheet piling MA 11C min.

DESIGNED BY H.N.
DRAWN BY B.B.
CHECKED BY C.E.B.
APPROVED BY K.A.

CITY OF CHICAGO
DEPARTMENT OF PUBLIC WORKS
BUREAU OF ENGINEERING

SOUTHWEST ROUTE SUPERHIGHWAY
ELEVATED HIGHWAY
S. LAKE PARK AVE. TO S. LAKE SHORE DRIVE

SECTION SW-1818.3-2H

KEY PLAN I

SCALE: AS NOTED DEC. 1964

SHEET NO. S-2 OF 99 SHEETS

202-60L70_As-Builts.dgn

AECOM

USER NAME = auyeungh	DESIGNED -		REVISED -
	CHECKED -		REVISED -
PLOT SCALE =	DRAWN - HAY		REVISED -
PLOT DATE = 11/11/2014	CHECKED - ATB		REVISED -

STATE OF ILLINOIS
DEPARTMENT OF TRANSPORTATION

AS-BUILTS

SHEET NO. 39 OF 174 SHEETS

F.A.I. RTE.	SECTION	COUNTY	TOTAL SHEETS	SHEET NO.
55	2010-080-B	COOK	886	356
		CONTRACT NO. 60L70		
	ILLINOIS FED. AID PROJECT			

FOR INFORMATION ONLY

ROUTE NO.	SECTION	COUNTY	TOTAL SHEETS	SHEET NO.
F. A. I.—55	SW-1818.3-2H	COOK	99	24
FED. ROAD DIV. NO. 4	ILLINOIS	PROJECT I.G.—55-7(59)-259		

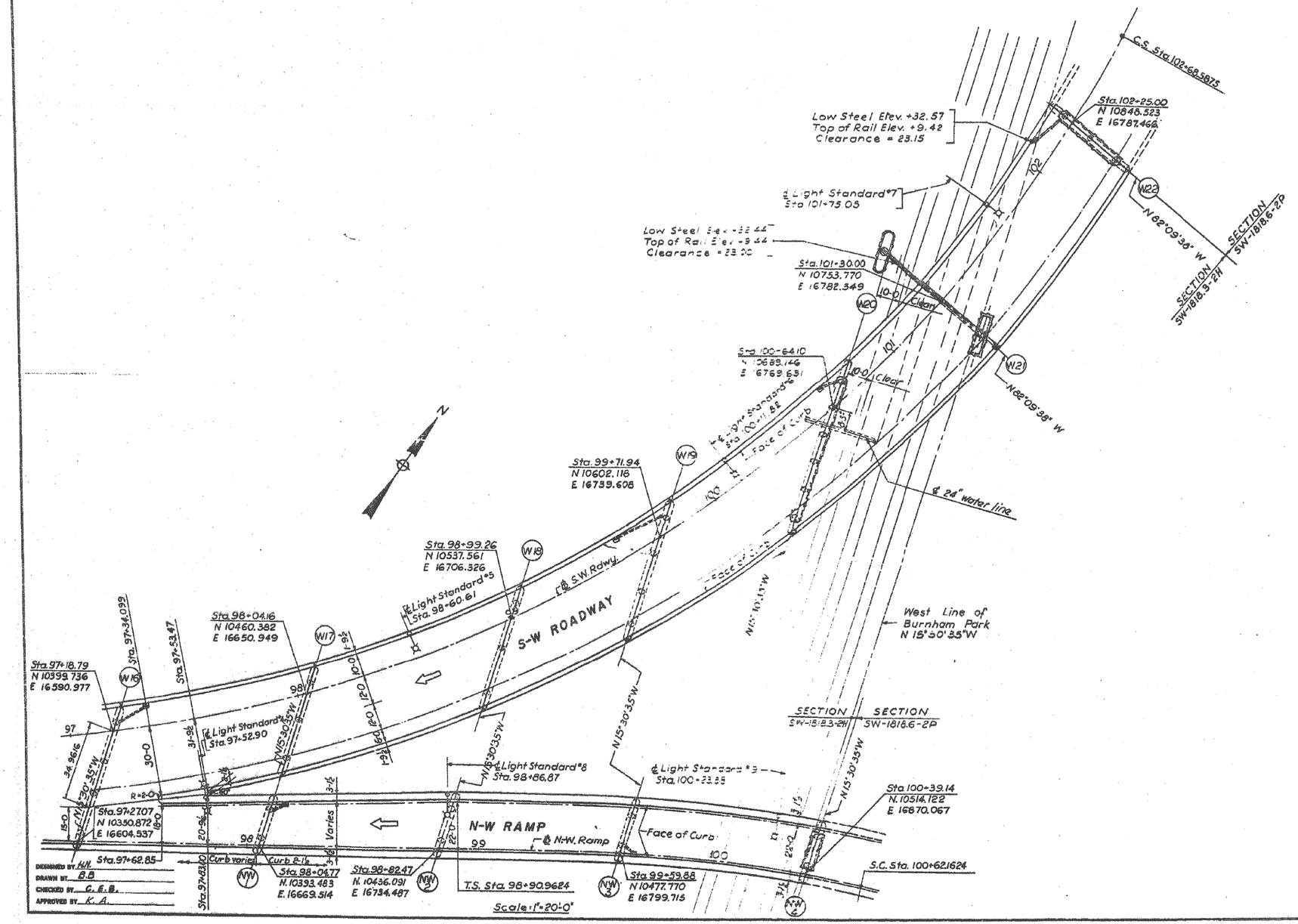

NOTES
Piers NW4 & W22 are included in this section. Expansion devices complete to be furnished under this section and east half to be installed under section SW-1818.6-2P
——— Indicates permanent steel sheet piling MP-116 min.

CITY OF CHICAGO
DEPARTMENT OF PUBLIC WORKS
BUREAU OF ENGINEERING

SOUTHWEST ROUTE SUPERHIGHWAY
ELEVATED HIGHWAY
S. LAKE PARK AVE. TO S. LAKE SHORE DRIVE

SECTION SW-1818.3-2H

KEY PLAN 2

SCALE: AS NOTED DEC. 1964
SHEET NO. 3-3 OF 99 SHEETS

203-60L70_As-Builts.dgn

AECOM	USER NAME = auyeungh	DESIGNED -	REVISED -
		CHECKED -	REVISED -
	PLOT SCALE =	DRAWN - HAY	REVISED -
	PLOT DATE = 11/11/2014	CHECKED - ATB	REVISED -

STATE OF ILLINOIS
DEPARTMENT OF TRANSPORTATION

AS-BUILTS

SHEET NO. 40 OF 174 SHEETS

F.A.I. RTE.	SECTION	COUNTY	TOTAL SHEETS	SHEET NO.
55	2010-080-B	COOK	886	357
		CONTRACT NO. 60L70		
	ILLINOIS	FED. AID PROJECT		

FOR INFORMATION ONLY

ROUTE NO.	SECTION	COUNTY	TOTAL SHEETS	SHEET NO.
F.A.I.—55	SW-1818.3-2H	COOK	99	25
FED. ROAD DIV. NO. 4	ILLINOIS	PROJECT I.&—55-7(38)-289		

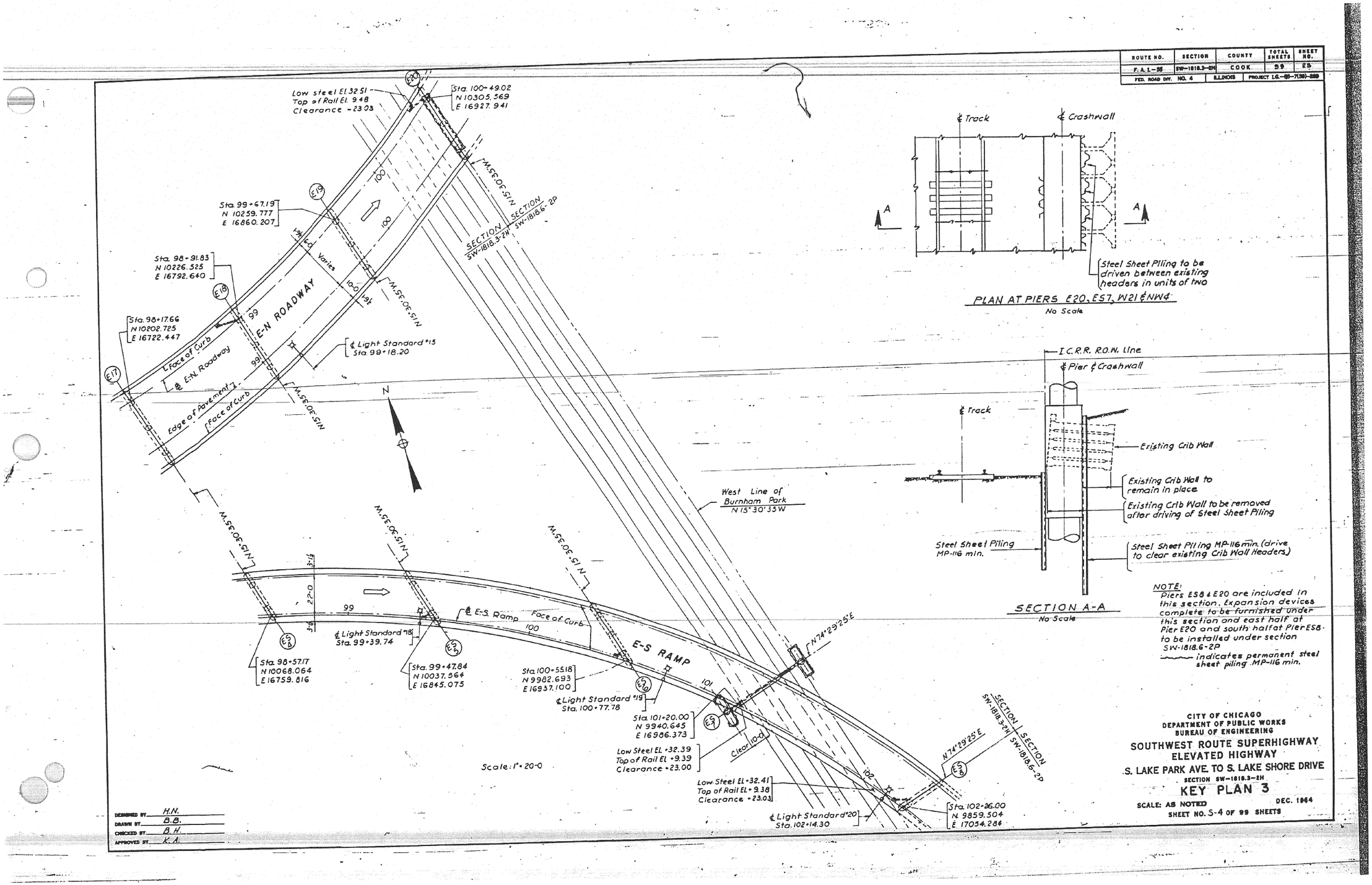

204-60L70_As-Builts.dgn

AECOM

USER NAME = auyeungh	DESIGNED -	REVISED -
	CHECKED -	REVISED -
PLOT SCALE =	DRAWN - HAY	REVISED -
PLOT DATE = 11/11/2014	CHECKED - ATB	REVISED -

STATE OF ILLINOIS
DEPARTMENT OF TRANSPORTATION

AS-BUILTS

SHEET NO. 41 OF 174 SHEETS

F.A.I. RTE.	SECTION	COUNTY	TOTAL SHEETS	SHEET NO.
55	2010-080-B	COOK	886	358
		CONTRACT NO. 60L70		
	ILLINOIS FED. AID PROJECT			

FOR INFORMATION ONLY

ROUTE NO.	SECTION	COUNTY	TOTAL SHEETS	SHEET NO.
F. A. I.–55	SW–1818.3–2H	COOK	99	25
FED. ROAD DIV. NO. 4	ILLINOIS	PROJECT I.C.–55–7(59)–288		

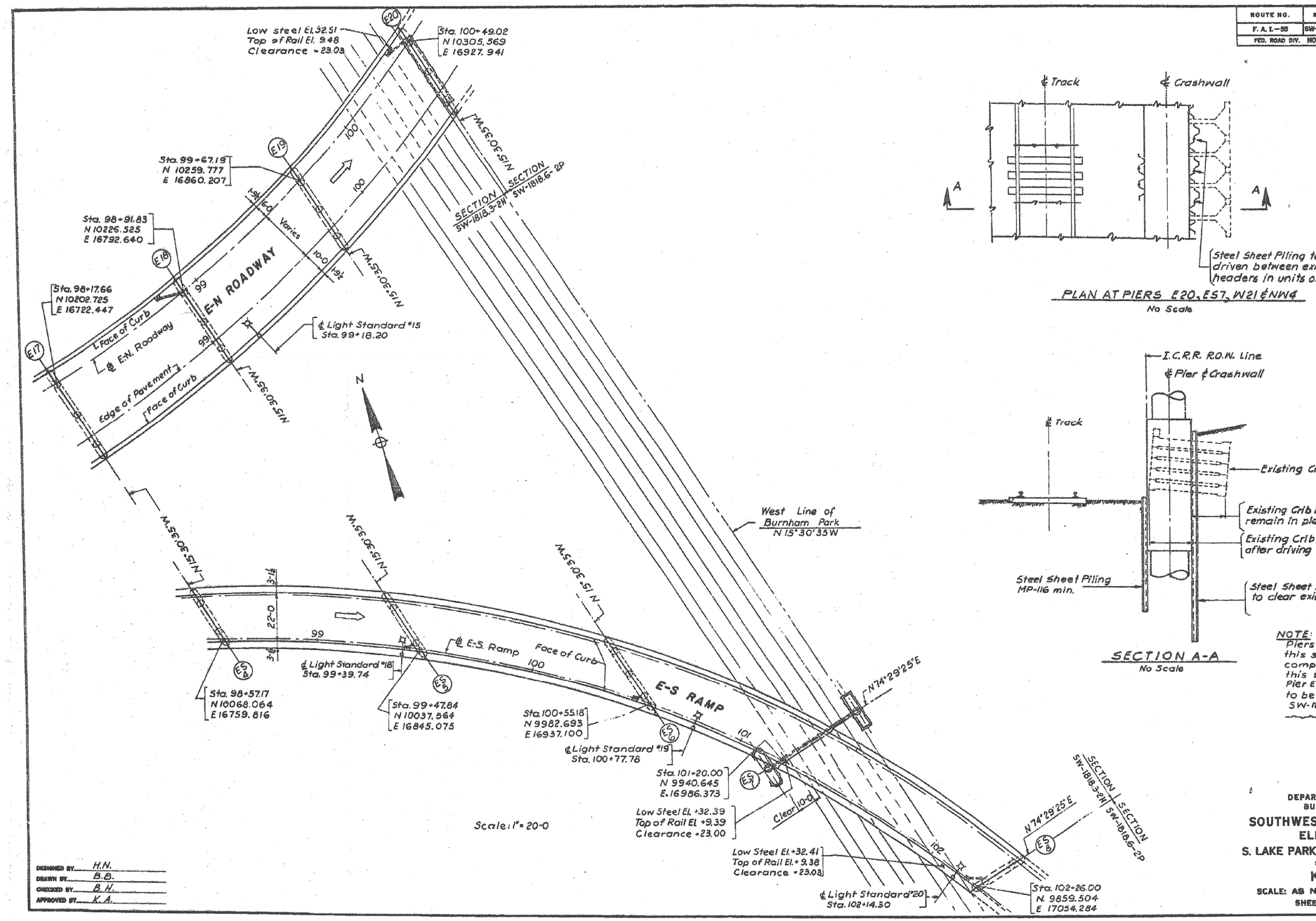

PLAN AT PIERS E20, E57, W21 & NW4
No Scale

SECTION A-A
No Scale

NOTE:
Piers E58 & E20 are included in this section. Expansion devices complete to be furnished under this section and east half at Pier E20 and south half at Pier E58 to be installed under section SW-1818.6-2P
~~~ indicates permanent steel sheet piling MP-116 min.

DESIGNED BY H.N.
DRAWN BY B.B.
CHECKED BY B.H.
APPROVED BY K.A.

CITY OF CHICAGO
DEPARTMENT OF PUBLIC WORKS
BUREAU OF ENGINEERING

SOUTHWEST ROUTE SUPERHIGHWAY
ELEVATED HIGHWAY
S. LAKE PARK AVE. TO S. LAKE SHORE DRIVE

SECTION SW–1818.3–2H

KEY PLAN 3

SCALE: AS NOTED DEC. 1964
SHEET NO. 5-4 OF 99 SHEETS

205-60L70_As-Builts.dgn

AECOM

USER NAME = auyeungh	DESIGNED -	REVISED -
	CHECKED -	REVISED -
PLOT SCALE =	DRAWN - HAY	REVISED -
PLOT DATE = 11/11/2014	CHECKED - ATB	REVISED -

STATE OF ILLINOIS
DEPARTMENT OF TRANSPORTATION

AS–BUILTS
SHEET NO. 42 OF 174 SHEETS

F.A.I. RTE.	SECTION	COUNTY	TOTAL SHEETS	SHEET NO.
55	2010-080-B	COOK	886	359
		CONTRACT NO. 60L70		
	ILLINOIS	FED. AID PROJECT		
~~~

FOR INFORMATION ONLY

ROUTE NO.	SECTION	COUNTY	TOTAL SHEETS	SHEET NO.
F.A.I.—55	SW-1818.3-2H	COOK	99	2-6
FED. ROAD DIV. NO. 4	ILLINOIS	PROJECT I.G.-55-7(39)-289		

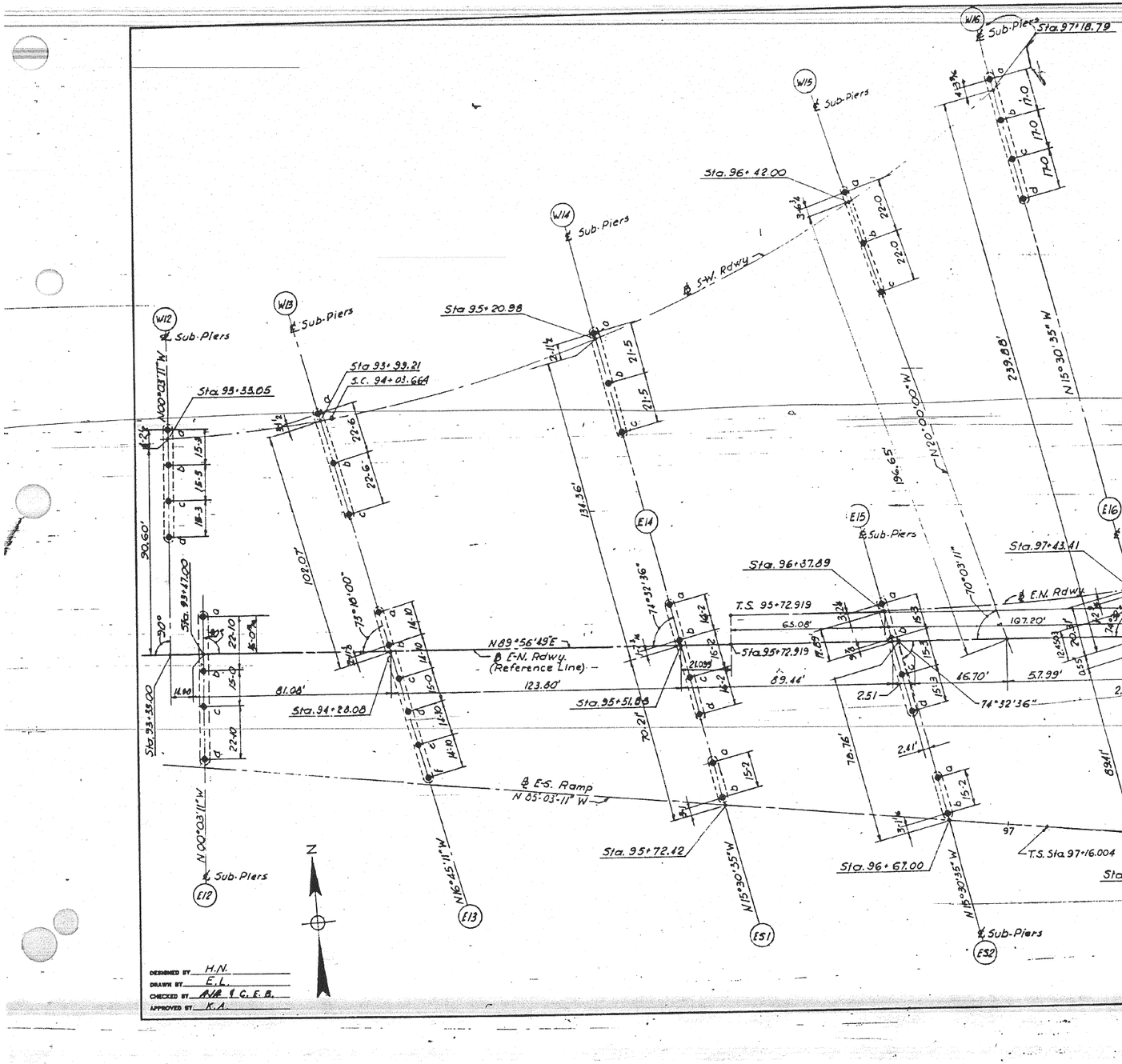

REINFORCEMENT BAR LIST

Bar Mark	Size	Length	Core Dia. out to out contin. tie	No of turns for contin. tie	Number of Bars Required E12	E13	E14	E15	E16	E17	ES1	ES2	ES3	ES4	W12	W13	W14	W15	W16	Total No Reqd.
V200	#10	30'-0"			20	30	20	20							20					110
V201	#10	40'-0"			20	30	20	20							20					110
V202	#10	28'-3"			20										20					40
V203	#10	22'-9"				30														30
V204	#10	26'-9"					20	20												40
V205	#11	30'-0"							15	15	20	30	30	12		15	27	15	20	199
V206	#11	40'-0"							15	15	20	30	30	12		15	27	15	20	199
V207	#11	25'-9"							15											15
V208	#11	24'-9"								15	20						27			62
V209	#11	23'-9"										30	30							60
V210	#11	28'-9"												12		15				27
V211	#11	27'-3"																15		15
V212	#11	26'-9"																	20	20
SP200	#3	30'-0"	2'-6¾"	33	4	6	4	4							4					22
SP201	#3	32'-0"	2'-6¾"	32	4										4					8
SP202	#3	27'-0"	2'-6¾"	27		6														6
SP203	#3	31'-0"	2'-6¾"	31			4	4												8
SP204	#3	30'-0"	3'-0¾"	33					6	3	2	2	2	2		3	3	3	4	30
SP205	#3	29'-0"	3'-0¾"	29						3	2						3			8
SP206	#3	28'-0"	3'-0¾"	28								2	2							4
SP207	#3	27'-0"	3'-0¾"	27										2		3				5
SP209	#3	31'-0"	3'-0¾"	31														3	4	7

SUB-PIER SCHEDULE

Pier No	No of Sub-Piers	Sub-Pier Dia.	Top El. Sub-Pier	Bott El. Sub-Pier	Dim. "H"	Concrete Cu. Ft.
E12	4	3'-0	+12.50	-50.00	62'-6"	1765
E13	6	3'-0	+ 5.90	-51.10	57'-0"	2416
E14	4	3'-0	+ 5.85	-55.15	61'-0"	1723
E15	4	3'-0	+ 5.00	-56.00	61'-0"	1723
E16	5	3'-6"	+ 3.80	-56.20	60'-0"	1728
E17	3	3'-6"	+ 3.80	-55.20	59'-0"	1699
ES1	2	3'-6"	+ 5.82	-53.18	59'-0"	1133
ES2	2	3'-6"	+ 5.00	-53.00	58'-0"	1114
ES3	2	3'-6"	+ 5.00	-53.00	58'-0"	1114
ES4	2	3'-6"	+ 3.80	-53.20	57'-0"	1094
W12	4	3'-0"	+12.50	-50.00	62'-6"	1765
W13	3	3'-6"	+ 5.90	-51.10	57'-0"	1642
W14	3	3'-6"	+ 5.82	-53.18	59'-0"	1699
W15	3	3'-6"	+ 5.40	-56.10	61'-6"	1771
W16	4	3'-6"	+ 3.80	-57.20	61'-0"	2345

Note: For Sub-Pier Details see Sheet No. S-6 & S-7

BILL OF MATERIAL (This Sheet only)

Description	Unit	Quantity
Sub-Piers	Cu. Ft.	24,729
Reinforcement Bars	Lbs.	155,709

CITY OF CHICAGO
DEPARTMENT OF PUBLIC WORKS
BUREAU OF ENGINEERING

SOUTHWEST ROUTE SUPERHIGHWAY
ELEVATED HIGHWAY
S. LAKE PARK AVE. TO S. LAKE SHORE DRIVE
SECTION SW-1818.3-2H

SUB-PIERS — PLAN I

SCALE: 1" = 20' DEC. 1964
SHEET NO. S-5 OF 99 SHEETS

206-60L70_As-Builts.dgn

AECOM	USER NAME = auyeungh	DESIGNED -	REVISED -
		CHECKED -	REVISED -
	PLOT SCALE =	DRAWN - HAY	REVISED -
	PLOT DATE = 11/11/2014	CHECKED - ATB	REVISED -

STATE OF ILLINOIS
DEPARTMENT OF TRANSPORTATION

AS-BUILTS

SHEET NO. 43 OF 174 SHEETS

F.A.I. RTE.	SECTION	COUNTY	TOTAL SHEETS	SHEET NO.
55	2010-080-B	COOK	886	360
		CONTRACT NO. 60L70		
	ILLINOIS	FED. AID PROJECT		

FOR INFORMATION ONLY

ROUTE NO.	SECTION	COUNTY	TOTAL SHEETS	SHEET NO.
F. A. I.—55	SW-1818.3-2H	COOK	99	27
FED. ROAD DIV. NO. 4	ILLINOIS	PROJECT I.G.-55-7(39)-399		

NOTES:
The Elevation of the bottom of Sub-Pier shall be raised or lowered when the exact elevation of top of rock is determined by the Engineer. If bottom of Sub-Pier is lowered, the contractor shall extend the Sub-Pier reinforcement by splicing bars of equal size to half of the vertical bars, extending these to the bottom of the Sub-Pier and lapping 20 bar diameters with the Sub-Pier verticals. Provide #3 circular ties @18" max.

Contractor shall make proper arrangements to maintain 3" clearance to vertical reinforcement bars for entire depth of Sub-Piers.

Use 3 spacers for each contin. tie Unit. Spacers may be channels, tees or angles. Cost of spacers is incidental to the item, "Reinforcement Bars".

* Approximate location of 24" Water Line. Care shall be taken during sub-pier excavation not to damage pipe.

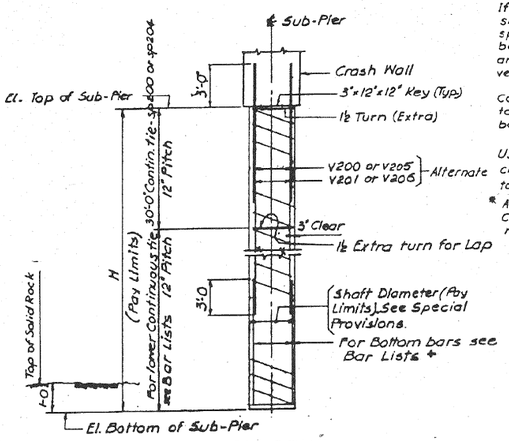

SUB-PIER DETAIL
TYPICAL FOR ALL SUB-PIERS EXCEPT E57R, E57L, W21L & W21R

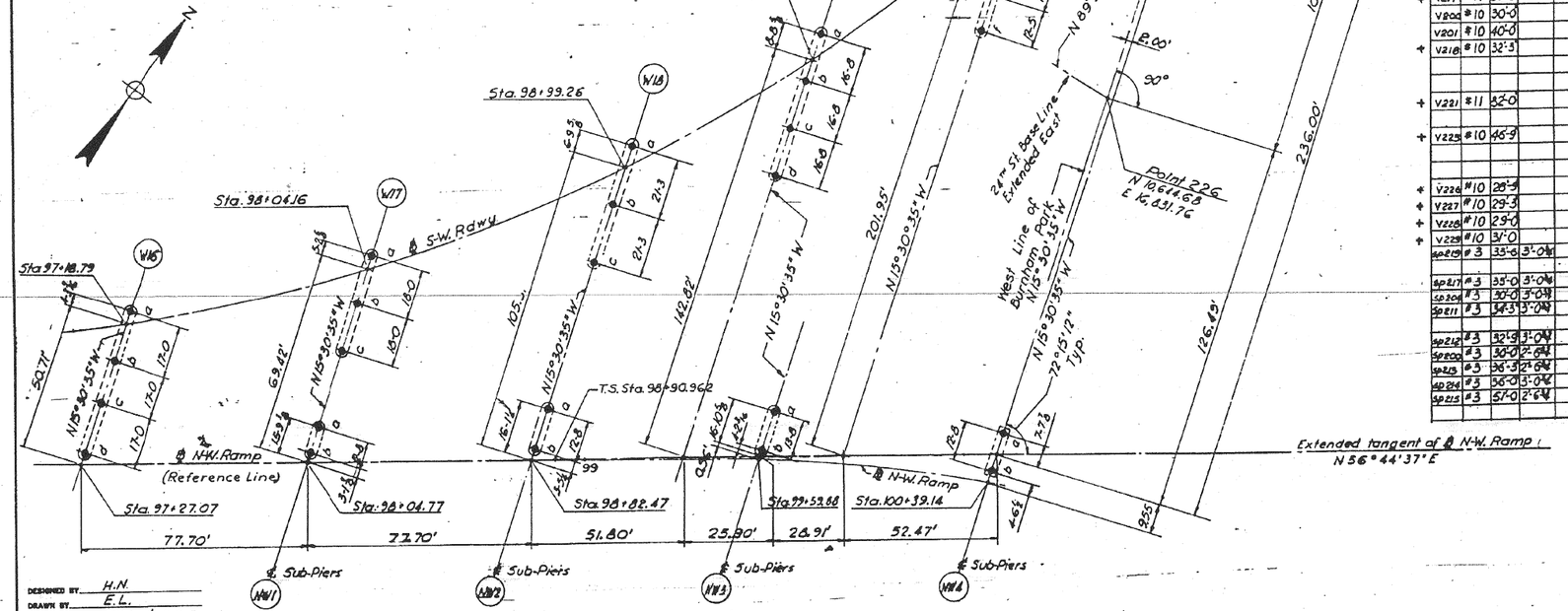

SUB-PIER SCHEDULE

Pier No	No of Sub-Piers	Sub-Pier Dia.	Top El. Sub-Pier	Bott El. Sub-Pier	Dim. "H"	Concrete Cu. Ft.
W17	3	3'-6"	+3.80	-59.20	63'-0"	1814
W18	3	3'-6"	+3.30	-60.20	63'-6"	1829
W19	4	3'-6"	+3.30	-61.20	64'-6"	2477
W20	6	3'-0"	+3.30	-63.20	66'-6"	2817
W21L	2	3'-6"	+3.25	-63.00	66'-3"	1272
W21R	2	3'-6"	+3.25	-63.00	66'-3"	1272
W22	3	3'-0"	+15.00	-66.00	81'-0"	1716
NW1	2	3'-6"	+3.80	-59.20	63'-0"	1210
NW2	2	3'-6"	+3.30	-60.20	63'-6"	1219
NW3	2	3'-6"	+3.30	-60.00	65'-3"	1219
NW4	2	3'-6"	+4.25	-61.00	65'-3"	1253

Note: For Sub-Pier Details see this sheet and sheet S-7

BILL OF MATERIAL (This Sheet only)

Description	Unit	Quantity
Sub-Piers	Cu. Ft.	18,098
Reinforcement Bars	Lbs.	127,868

REINFORCEMENT BAR LIST

Bar Mark	Size	Length	Conc. Dia. o. o. Contin. Ties	No of Turns for Contin. Tie	Number of Bars Required W17	W18	W19	W20	W21L	W21R	W22	NW1	NW2	NW3	NW4	Total Lbs Weight
V200	#11	30'-0"			36	33	32		30	30						161
V206	#11	40'-0"			36	33	32		30	30						161
+ V215	#11	28'-9"			36											36
+ V216	#11	29'-3"				33										33
+ V217	#11	30'-3"					32									32
V202	#10	30'-0"						30				15	14	14	14	101
V201	#10	40'-0"						30				15	14	14	14	101
+ V218	#10	32'-3"						30								30
+ V221	#11	32'-0"							30	30						60
+ V225	#10	46'-9"										15				15
+ V226	#10	29'-9"											14			14
+ V227	#10	29'-3"												14		14
+ V228	#10	29'-0"													14	14
+ V229	#10	31'-0"													2	2
Sp209	#3	35'-6"	3'-0"	34												
Sp217	#3	35'-0"	3'-0"	35			3				2	2		2	2	11
Sp204	#3	30'-0"	3'-0"	33	3	3	4					2	2	2	2	18
Sp211	#3	34'-3"	3'-0"	34			4									4
Sp212	#3	32'-3"	3'-0"	33	3							2				5
Sp200	#3	30'-0"	2'-6"	33				6			3					9
Sp213	#3	30'-3"	2'-6"	36				6								6
Sp214	#3	36'-0"	3'-0"	36							2	2				4
Sp215	#3	51'-0"	2'-6"	51							3					3

CITY OF CHICAGO
DEPARTMENT OF PUBLIC WORKS
BUREAU OF ENGINEERING

SOUTHWEST ROUTE SUPERHIGHWAY
ELEVATED HIGHWAY
S. LAKE PARK AVE. TO S. LAKE SHORE DRIVE
SECTION SW-1818.3-2H

SUB-PIERS—PLAN 2

SCALE: 1" = 20' DEC. 1964

SHEET NO. S-6 OF 99 SHEETS.

DESIGNED BY H.N.
DRAWN BY E.L.
CHECKED BY A.V.A. & C.E.B.
APPROVED BY K.A.

207-60L70_As-Builts.dgn

AECOM

USER NAME = auyeungh	DESIGNED -	REVISED -
	CHECKED -	REVISED -
PLOT SCALE =	DRAWN - HAY	REVISED -
PLOT DATE = 11/11/2014	CHECKED - ATB	REVISED -

STATE OF ILLINOIS
DEPARTMENT OF TRANSPORTATION

AS-BUILTS

SHEET NO. 44 OF 174 SHEETS

F.A.I. RTE.	SECTION	COUNTY	TOTAL SHEETS	SHEET NO.
55	2010-080-B	COOK	886	361
		CONTRACT NO. 60L70		
	ILLINOIS	FED. AID PROJECT		

FOR INFORMATION ONLY

ROUTE NO.	SECTION	COUNTY	TOTAL SHEETS	SHEET NO.
F.A.I.—90	SW-1818.3-2H	COOK	99	28
FED. ROAD DIV.—NO. 4	ILLINOIS	PROJECT-I.Q.-88-7(88)-288		

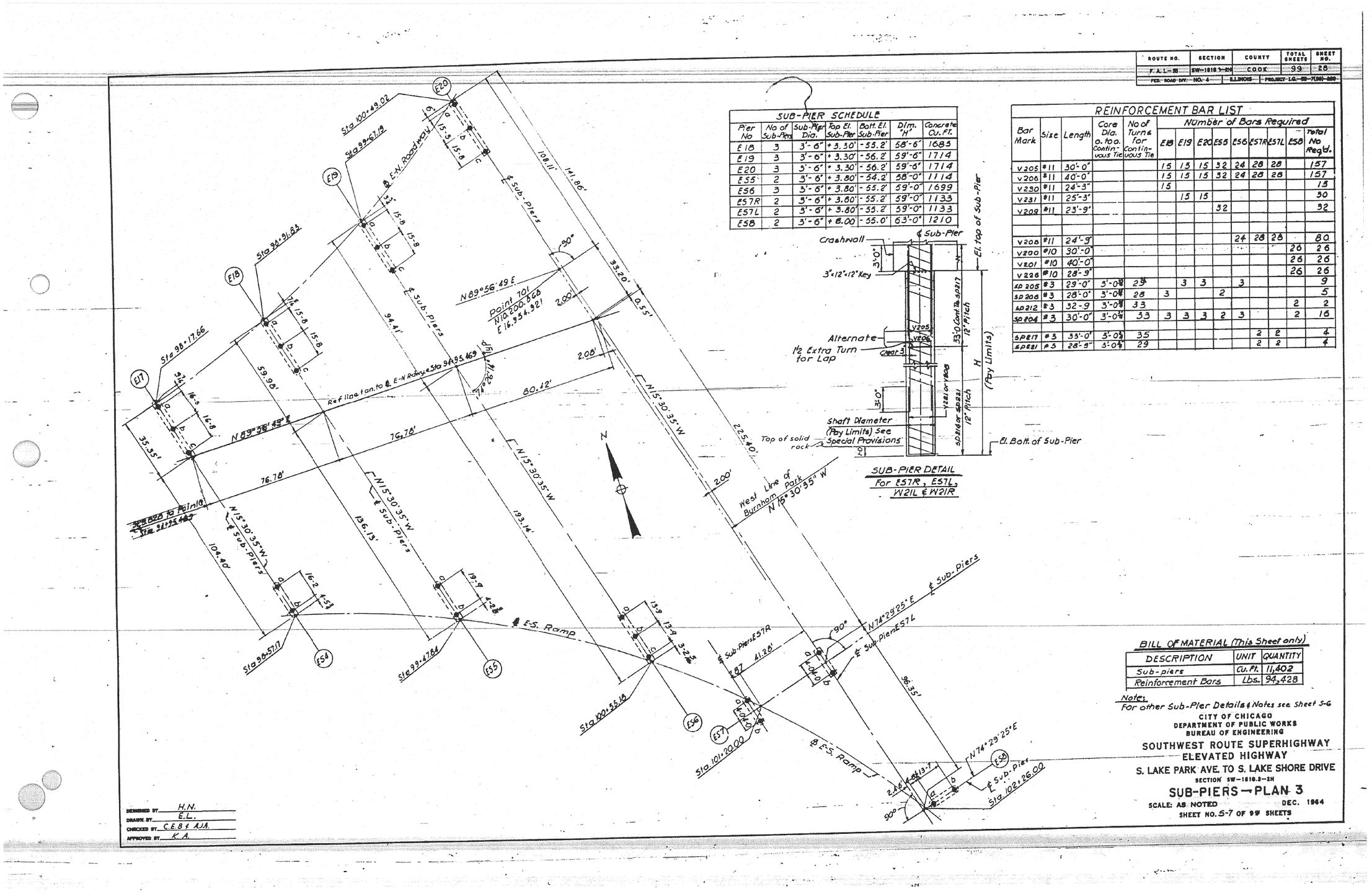

SUB-PIER SCHEDULE

Pier No	No of Sub-Piers	Sub-Pier Dia.	Top El. Sub-Pier	Batt. El. Sub-Pier	Dim. "H"	Concrete Cu. Ft.
E18	3	3'-6"	+3.30'	-55.2'	58'-6"	1685
E19	3	3'-6"	+3.30'	-56.2'	59'-6"	1714
E20	3	3'-6"	+3.30'	-56.2'	59'-6"	1714
E55	2	3'-6"	+3.80'	-54.2'	58'-0"	1114
E56	3	3'-6"	+3.80'	-55.2'	59'-0"	1699
E57R	2	3'-6"	+3.80'	-55.2'	59'-0"	1133
E57L	2	3'-6"	+3.80'	-55.2'	59'-0"	1133
E58	2	3'-6"	+8.00'	-55.0'	63'-0"	1210

SUB-PIER DETAIL
For E57R, E57L, W21L & W21R

REINFORCEMENT BAR LIST

Bar Mark	Size	Length	Core Dia. o. to o. Continuous Tie	No of Turns for Continuous Tie	Number of Bars Required E18	E19	E20	E55	E56	E57R	E57L	E58	Total No Reqd.
V205	#11	30'-0"			15	15	15	32	24	28	28		157
V206	#11	40'-0"			15	15	15	32	24	28	28		157
V230	#11	24'-3"			15								15
V231	#11	25'-3"				15	15						30
V209	#11	23'-9"						32					32
V208	#11	24'-9"							24	28	28		80
V200	#10	30'-0"										26	26
V201	#10	40'-0"										26	26
V226	#10	28'-9"										26	26
SD205	#3	29'-0"	3'-0"	29		3	3		3				9
SD208	#3	28'-0"	3'-0"	28	3			2					5
SD212	#3	32'-9	3'-0"	33								2	2
SD204	#3	30'-0"	3'-0"	33	3	3	3	2	3			2	16
SPE17	#3	33'-0"	3'-0"	35						2	2		4
SPE21	#3	28'-9"	3'-0"	29						2	2		4

BILL OF MATERIAL (This Sheet only)

DESCRIPTION	UNIT	QUANTITY
Sub-piers	Cu. Ft.	11,402
Reinforcement Bars	Lbs.	94,428

Note:
For other Sub-Pier Details & Notes see Sheet S-6

CITY OF CHICAGO
DEPARTMENT OF PUBLIC WORKS
BUREAU OF ENGINEERING

SOUTHWEST ROUTE SUPERHIGHWAY
ELEVATED HIGHWAY
S. LAKE PARK AVE. TO S. LAKE SHORE DRIVE
SECTION SW-1818.3-2H

SUB-PIERS — PLAN 3

SCALE: AS NOTED DEC. 1964
SHEET NO. S-7 OF 99 SHEETS

DESIGNED BY H.N.
DRAWN BY E.L.
CHECKED BY C.E.B & A.J.A.
APPROVED BY K.A.

208-60L70_As-Builts.dgn

AECOM

USER NAME = auyeungh	DESIGNED -	REVISED -
	CHECKED -	REVISED -
PLOT SCALE =	DRAWN - HAY	REVISED -
PLOT DATE = 11/11/2014	CHECKED - ATB	REVISED -

STATE OF ILLINOIS
DEPARTMENT OF TRANSPORTATION

AS-BUILTS

SHEET NO. 45 OF 174 SHEETS

F.A.I. RTE.	SECTION	COUNTY	TOTAL SHEETS	SHEET NO.
55	2010-080-B	COOK	886	362
		CONTRACT NO. 60L70		
	ILLINOIS	FED. AID PROJECT		

FOR INFORMATION ONLY

ROUTE-NO.	SECTION	COUNTY	TOTAL SHEETS	SHEET NO.
F. A. L.-318	SW-1818.3-2H	COOK	99	29
FED. ROAD DIV. NO. 4	ILLINOIS	PROJECT I.G.-88-7(39)-2389		

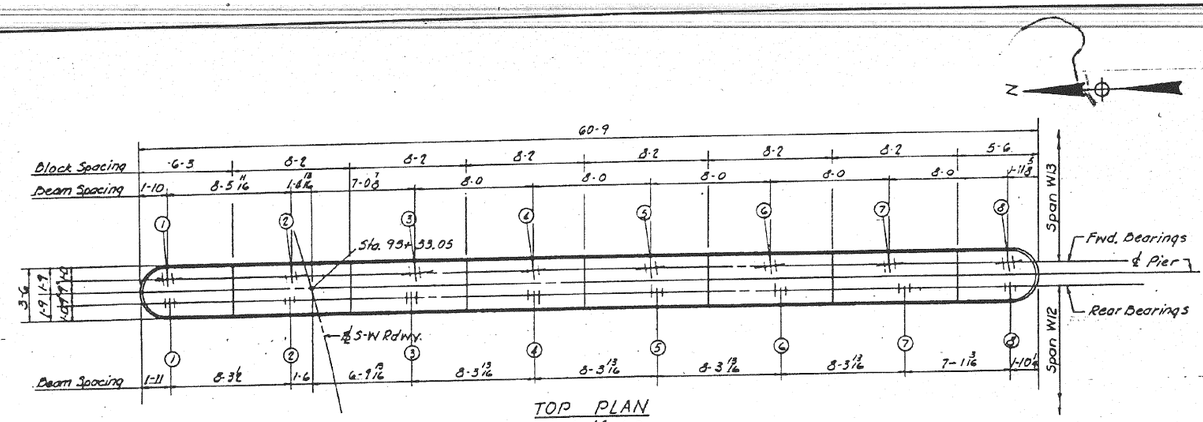

TOP PLAN
Scale 1/16" = 1-0

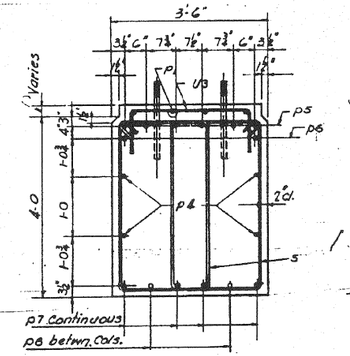

SECTION A-A
Scale 3/4" = 1-0

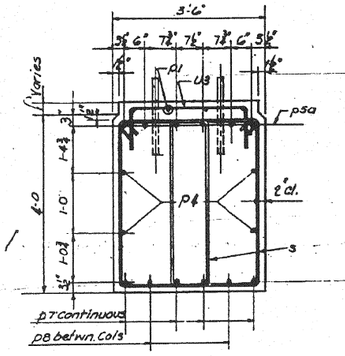

SECTION B-B
Scale 3/4" = 1-0

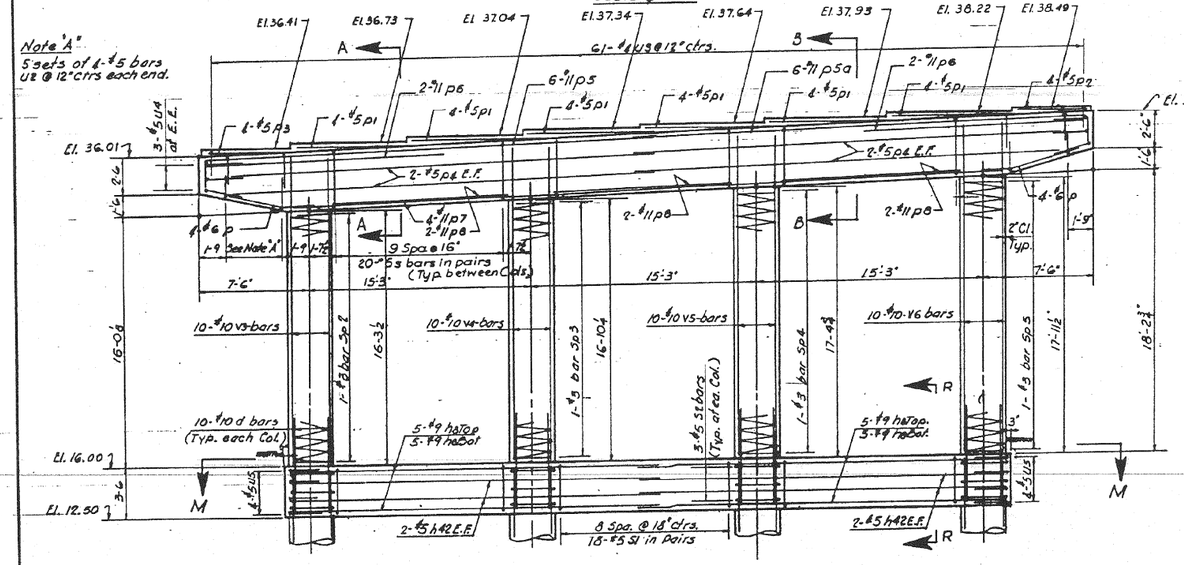

ELEVATION
Scale 1/2" = 1-0

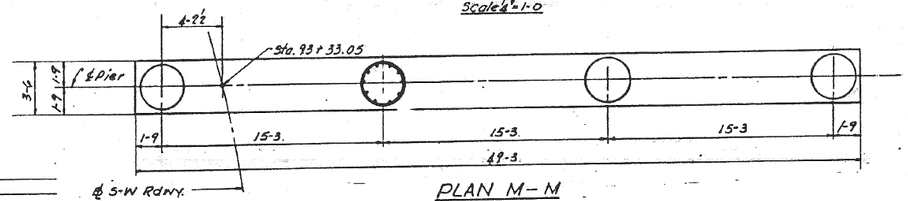

PLAN M-M
Scale 1/2" = 1-0

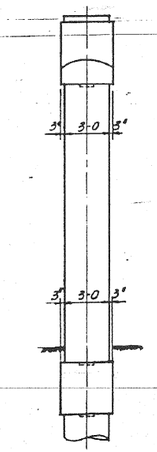

END VIEW
Scale 1/2" = 1-0

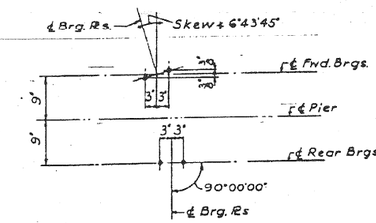

ANCHOR BOLT SETTING DIAGRAM
(Typical for all Beams)

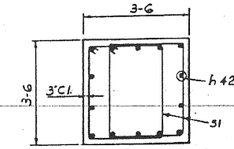

SECTION R-R
Scale 1/2" = 1-0

BILL OF MATERIAL

DESCRIPTION	UNIT	QUANTITY
Class 'X' Concrete	Cu.Yds	73.3
Reinforcement Bars	Lbs.	13,530
Class A Excavation for Structures	Cu.Yds.	31

NOTE:
For Additional Pier Sections and Notes see Sheet No. S30.

DESIGNED BY AJA
DRAWN BY A.S.
CHECKED BY AJA
APPROVED BY K.A.

CITY OF CHICAGO
DEPARTMENT OF PUBLIC WORKS
BUREAU OF ENGINEERING

SOUTHWEST ROUTE SUPERHIGHWAY
ELEVATED HIGHWAY
S. LAKE PARK AVE. TO S. LAKE SHORE DRIVE
SECTION SW-1818.3-2H

PIER W12

SCALE: AS NOTED DEC. 1964
SHEET NO. S-8 OF 99 SHEETS

209-60L70_As-Builts.dgn

AECOM

USER NAME = auyeungh	DESIGNED -	REVISED -
	CHECKED -	REVISED -
PLOT SCALE =	DRAWN - HAY	REVISED -
PLOT DATE = 11/11/2014	CHECKED - ATB	REVISED -

STATE OF ILLINOIS
DEPARTMENT OF TRANSPORTATION

AS-BUILTS

SHEET NO. 46 OF 174 SHEETS

F.A.I. RTE.	SECTION	COUNTY	TOTAL SHEETS	SHEET NO.
55	2010-080-B	COOK	886	363
		CONTRACT NO. 60L70		
	ILLINOIS FED. AID PROJECT			

FOR INFORMATION ONLY

ROUTE NO.	SECTION	COUNTY	TOTAL SHEETS	SHEET NO.
F.A.I.—55	SW-1818.3-2H	COOK	99	30
FED. ROAD DIV. NO. 4	ILLINOIS	PROJECT I.Q.—55-7(39)-288		

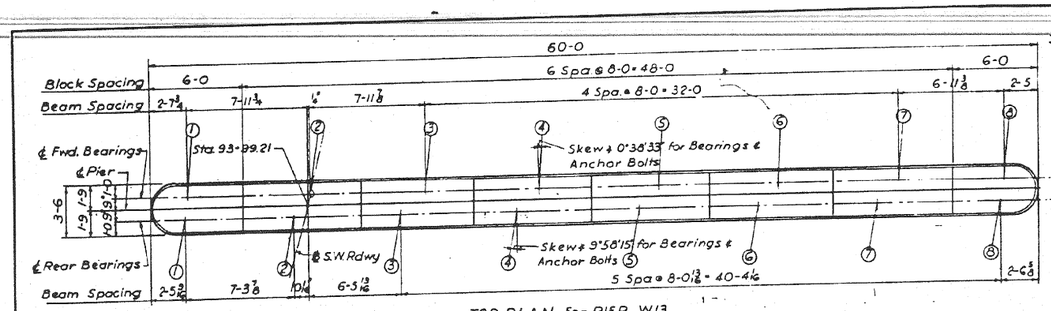

TOP PLAN For PIER W13
Scale: 1/4"-1'-0"

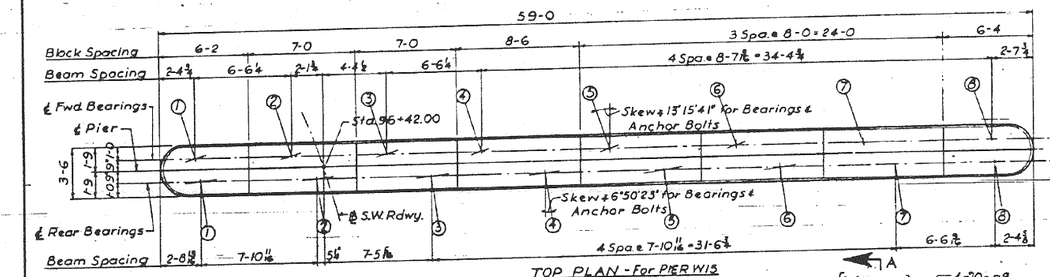

TOP PLAN - For PIER W15
Scale: 1/4"-1'-0"

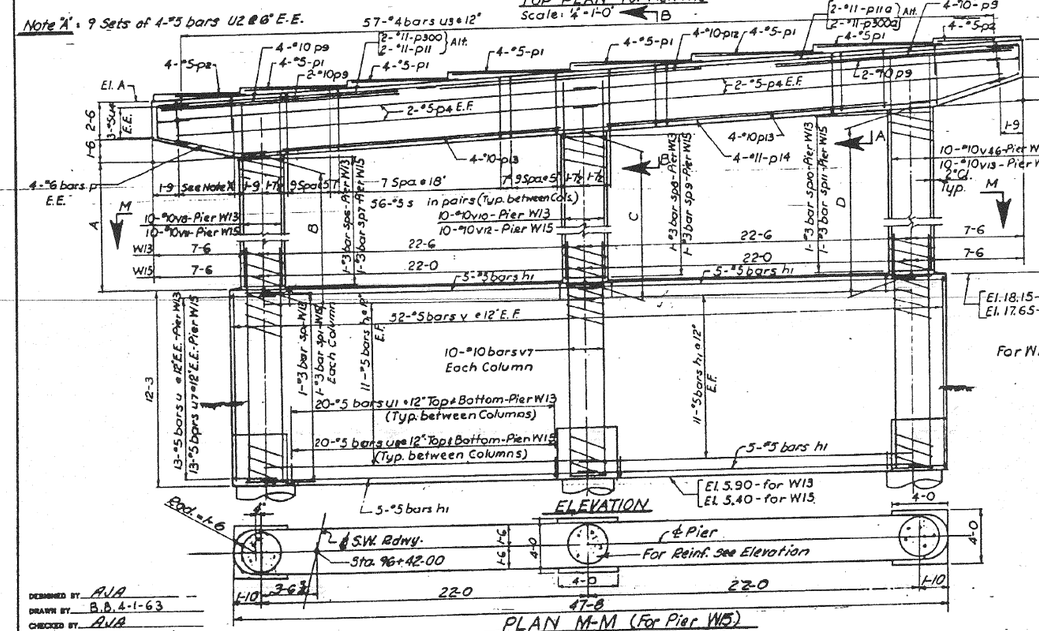

ELEVATION

PLAN M-M (For Pier W15)

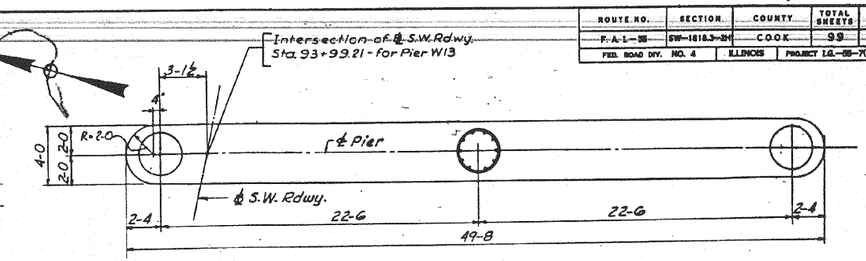

PLAN M-M FOR PIER W13
Scale: 1/8"=1-0

PIER	A	B	ELEVATIONS Top of Block Rear Bearings 1	2	3	4	5	6	7	8	Top of Block Forward Bearings 1	2	3	4	5	6	7	8	DIMENSIONS A	B	C	D	E
W13	34.22	37.84	35.07	35.48	35.89	36.30	36.63	37.30	37.78	38.26	34.87	35.30	35.76	36.23	36.70	37.17	37.64	38.18	12-0 3/8	12-6 1/4	13-10 1/2	15-2 3/8	15-8 1/4
W15	35.35	38.64	36.04	36.45	36.90	37.30	37.79	38.13	38.46	38.86	36.14	36.57	36.90	37.30	37.79	38.22	38.57	38.95	13-10 3/8	14-3 1/2	15-5 1/4	16-7 1/8	16-11 7/8

BILL OF MATERIAL

DESCRIPTION	UNIT	QUANTITY Pier W13	Pier W15
Class X Concrete	Cu. Yds.	132.9	108.0
Reinforcement Bars	Lbs.	14,935	14,255
Class A Excavation for Struct.	Cu. Yds.	44	21

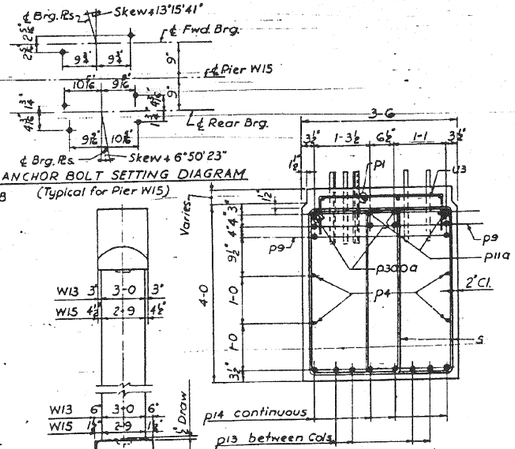

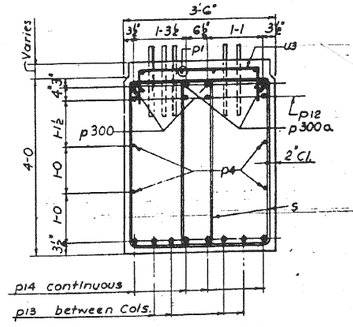

SECTION B-B
Scale: 1/4"=1'-0"

NOTE:
For Additional Pier Sections & Notes see Sheet No S30.

CITY OF CHICAGO
DEPARTMENT OF PUBLIC WORKS
BUREAU OF ENGINEERING

SOUTHWEST ROUTE SUPERHIGHWAY
ELEVATED HIGHWAY
S. LAKE PARK AVE. TO S. LAKE SHORE DRIVE
SECTION SW-1818.3-2H

PIERS W13 & W15

SCALE: AS NOTED DEC. 1964
SHEET NO. S-9 OF 99 SHEETS.

DESIGNED BY A.V.A.
DRAWN BY B.B. 4-1-63
CHECKED BY A.V.A.
APPROVED BY K.A.

210-60L70_As-Builts.dgn

AECOM

USER NAME = auyeungh	DESIGNED -	REVISED -
	CHECKED -	REVISED -
PLOT SCALE =	DRAWN - HAY	REVISED -
PLOT DATE = 11/11/2014	CHECKED - ATB	REVISED -

STATE OF ILLINOIS
DEPARTMENT OF TRANSPORTATION

AS-BUILTS
SHEET NO. 47 OF 174 SHEETS

F.A.I. RTE.	SECTION	COUNTY	TOTAL SHEETS	SHEET NO.
55	2010-080-B	COOK	886	364
		CONTRACT NO. 60L70		
	ILLINOIS FED. AID PROJECT			

FOR INFORMATION ONLY

ROUTE NO.	SECTION	COUNTY	TOTAL SHEETS	SHEET NO.
F.A.I.—55	SW-1818.3-2H	COOK	99	51
FED. ROAD DIV. NO. 4	ILLINOIS	PROJECT I.C.—88-7(39)-388		

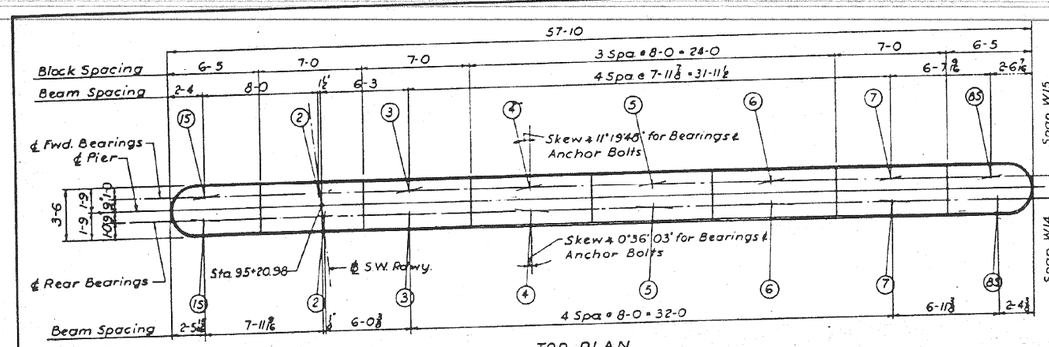

TOP PLAN
Scale: ¼"=1'-0"

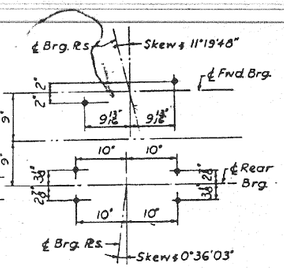

ANCHOR BOLT SETTING DIAGRAM
(Typical for all Beams)

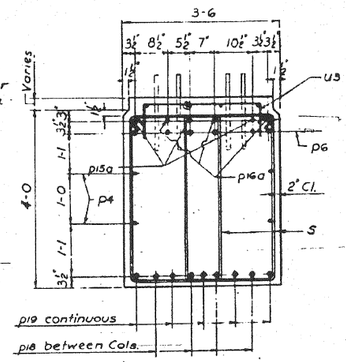

SECTION A-A
Scale: ¾"=1'-0"

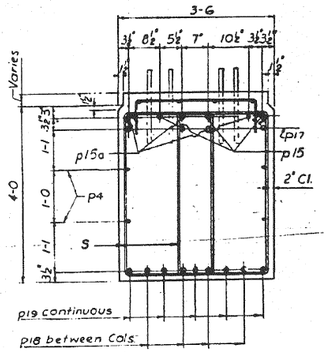

SECTION B-B
Scale: ¾"=1'-0"

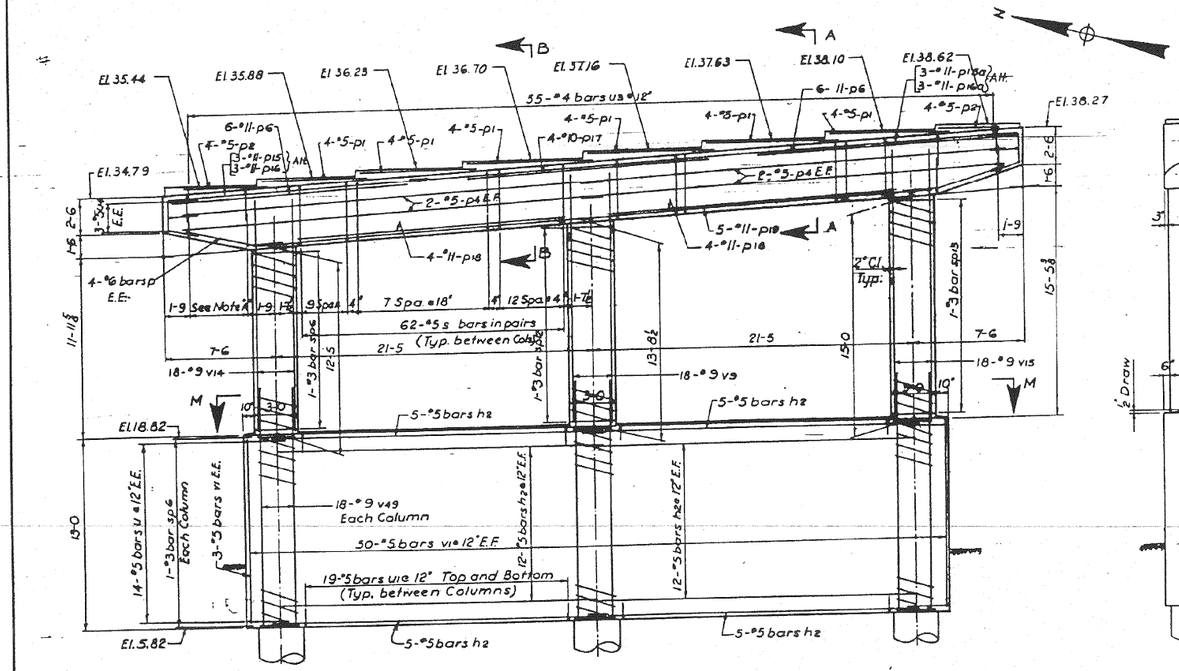

NOTE A"
13 Sets of 4-#5 bars u2a @ 4" E.E.

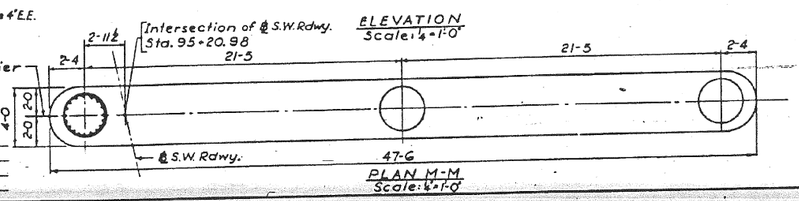

ELEVATION
Scale: ¼"=1'-0"

PLAN M-M
Scale: ¼"=1'-0"

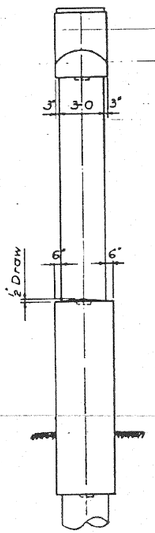

END VIEW
Scale: ¾"=1'-0"

BILL OF MATERIAL

DESCRIPTION	UNIT	QUANTITY
Class 'X' Concrete	Cu. Yds.	132.9
Reinforcement Bars	Lbs.	20,730
Class A Excavation for Structures	Cu. Yds.	30

NOTE:
For Additional Pier Sections and Notes see Sheet No. S30.

CITY OF CHICAGO
DEPARTMENT OF PUBLIC WORKS
BUREAU OF ENGINEERING

SOUTHWEST ROUTE SUPERHIGHWAY
ELEVATED HIGHWAY
S. LAKE PARK AVE. TO S. LAKE SHORE DRIVE
SECTION SW-1818.3-2H

PIER W14

SCALE: AS NOTED DEC. 1964
SHEET NO. S-10 OF 99 SHEETS

DESIGNED BY A.J.A
DRAWN BY B.B. 3-16-63
CHECKED BY A.J.A
APPROVED BY K.A.

211-60L70_As-Builts.dgn

AECOM

USER NAME = auyeungh	DESIGNED -	REVISED -
	CHECKED -	REVISED -
PLOT SCALE =	DRAWN - HAY	REVISED -
PLOT DATE = 11/11/2014	CHECKED - ATB	REVISED -

STATE OF ILLINOIS
DEPARTMENT OF TRANSPORTATION

AS-BUILTS
SHEET NO. 48 OF 174 SHEETS

F.A.I. RTE.	SECTION	COUNTY	TOTAL SHEETS	SHEET NO.
55	2010-080-B	COOK	886	365
		CONTRACT NO. 60L70		
	ILLINOIS	FED. AID PROJECT		

FOR INFORMATION ONLY

ROUTE NO.	SECTION	COUNTY	TOTAL SHEETS	SHEET NO.
F.A.I.-55	SW-1818.3-2H	COOK	99	32
FED. ROAD DIV. NO. 4	ILLINOIS	PROJECT I.S.-55-7(201)-[illegible]		

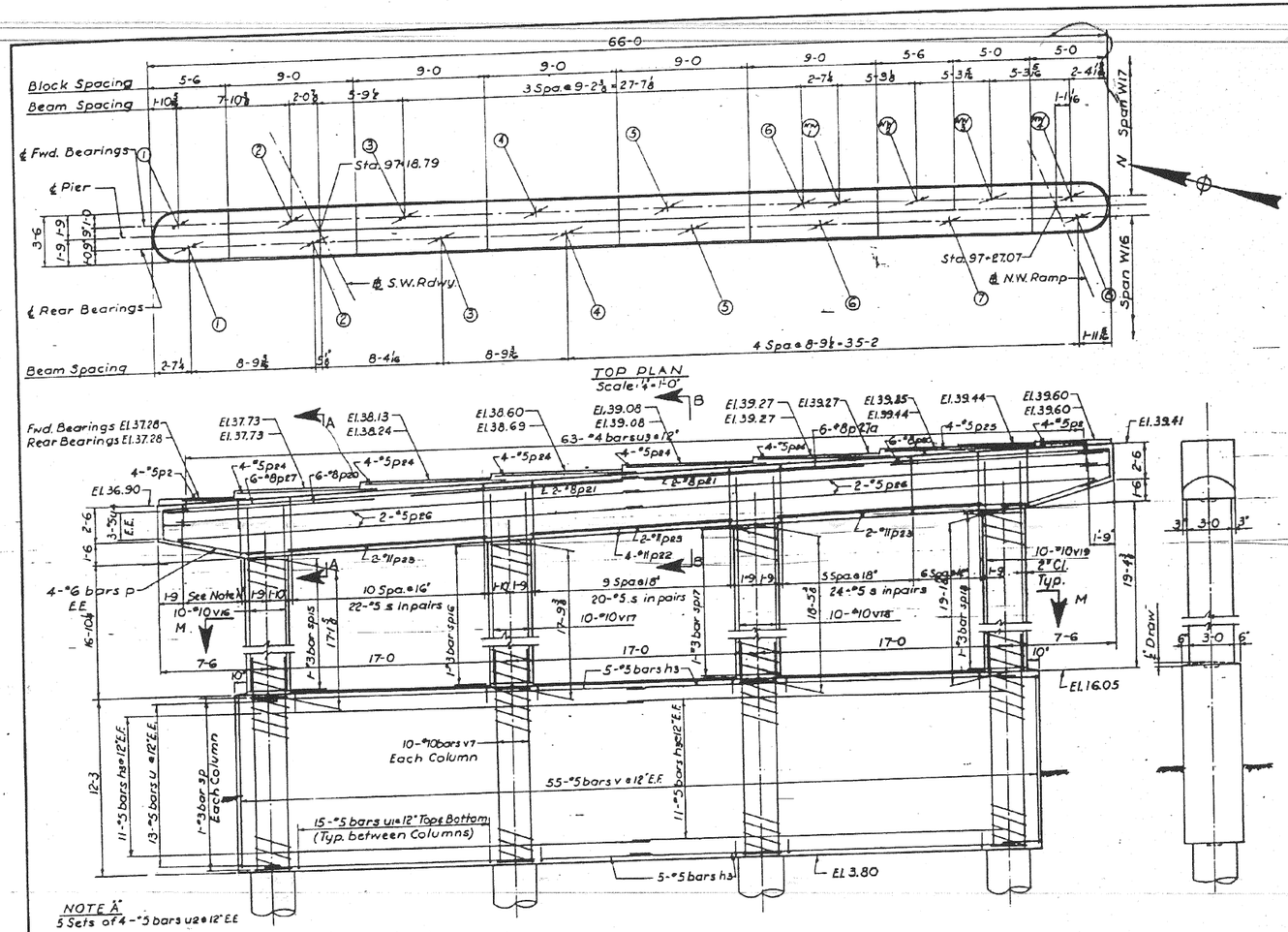

TOP PLAN
Scale: ¼" = 1'-0"

ELEVATION
Scale: ¼" = 1'-0"

END VIEW
Scale: ¼" = 1'-0"

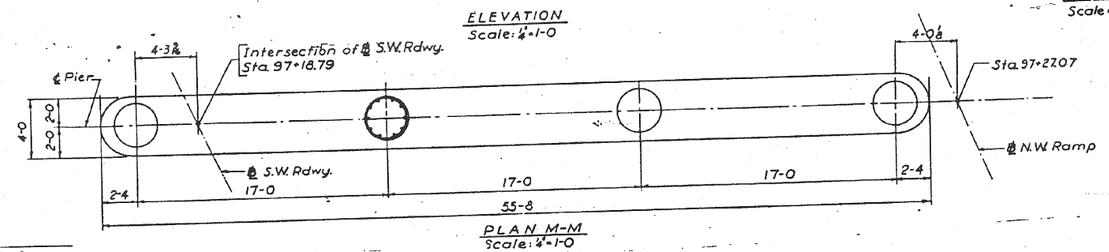

PLAN M-M
Scale: ¼" = 1'-0"

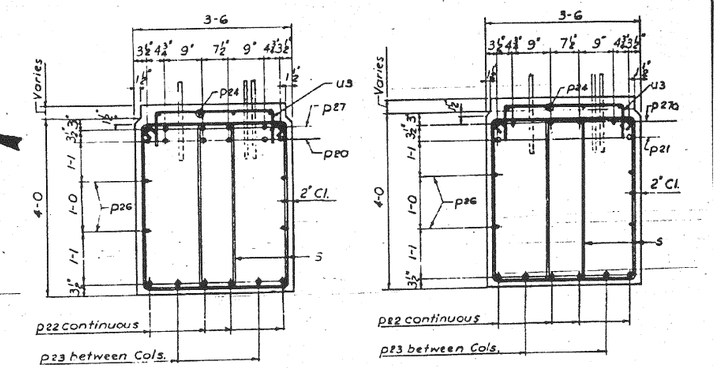

SECTION A-A
Scale: ¾" = 1'-0"

SECTION B-B
Scale: ¾" = 1'-0"

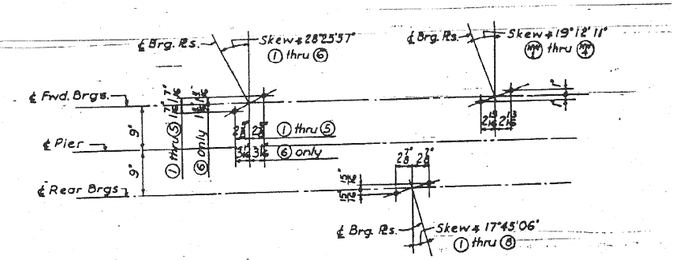

ANCHOR BOLT SETTING DIAGRAM

BILL OF MATERIAL

DESCRIPTION	UNIT	QUANTITY
Class 'X' Concrete	Cu. Yds.	156.0
Reinforcement Bars	Lbs.	16,150
Class A Excavation for Structures	Cu. Yds.	42

NOTE:
For additional pier sections and notes see sheet No. S30

CITY OF CHICAGO
DEPARTMENT OF PUBLIC WORKS
BUREAU OF ENGINEERING
SOUTHWEST ROUTE SUPERHIGHWAY
ELEVATED HIGHWAY
S. LAKE PARK AVE. TO S. LAKE SHORE DRIVE
SECTION SW-1818.3-2H
PIER W16
SCALE: AS NOTED DEC. 1964
SHEET NO. S-11 OF 99 SHEETS

DESIGNED BY AJA
DRAWN BY B.B. 4-5-63
CHECKED BY AJA
APPROVED BY K.A.

212-60L70_As-Builts.dgn

AECOM	USER NAME = auyeungh	DESIGNED -	REVISED -	STATE OF ILLINOIS DEPARTMENT OF TRANSPORTATION	AS-BUILTS	F.A.I. RTE. 55	SECTION 2010-080-B	COUNTY COOK	TOTAL SHEETS 886	SHEET NO. 366
		CHECKED -	REVISED -					CONTRACT NO. 60L70		
	PLOT SCALE =	DRAWN - HAY	REVISED -							
	PLOT DATE = 11/11/2014	CHECKED - ATB	REVISED -		SHEET NO. 49 OF 174 SHEETS		ILLINOIS	FED. AID PROJECT		

FOR INFORMATION ONLY

ROUTE NO.	SECTION	COUNTY	TOTAL SHEETS	SHEET NO.
F. A. I.—55	SW-1818.3-2H	COOK	99	33
FED. ROAD DIV. NO. 4	ILLINOIS	PROJECT I.G.-55-7(59)-289		

PIER	ELEVATIONS A	ELEVATIONS B	Top of Block Rear Brgs. 1	2	3	4	5	6	Top of Block Fwd. Brgs. 1	2	3	4	5	6	DIMENSIONS A	B	C	D	E
W17	37.12	39.24	37.51	38.01	38.47	38.92	39.37	39.63	37.51	37.89	38.26	38.78	39.29	39.70	17-0⅞	17-4½	18-1½	18-10½	19-24
W18	36.71	39.11	37.12	37.64	38.14	38.64	39.11	39.52	37.12	37.57	37.97	38.54	39.11	39.52	17-2	17-5⅝	18-4⅜	19-3	19-6¾

BILL OF MATERIAL.

DESCRIPTION	UNIT	QUANTITY Pier W17	QUANTITY Pier W18
Class "X" Concrete	Cu. Yds.	114.8	130.4
Reinforcement Bars	Lbs.	20,070	19,940
Class A Excavation for Structures	Cu. Yds.	31	32

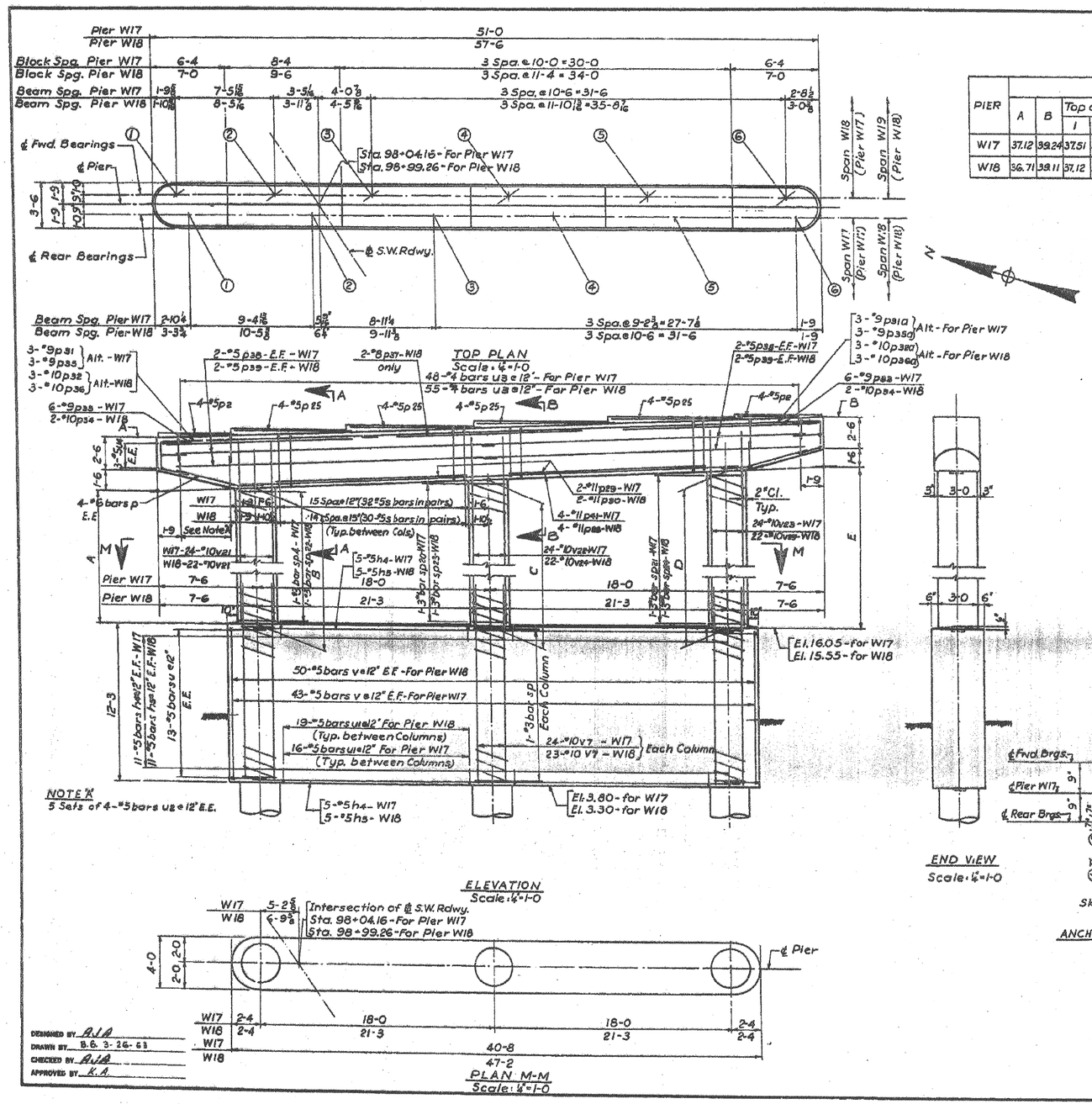

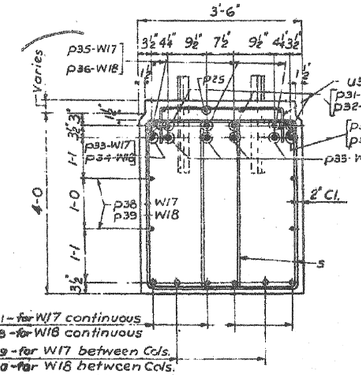

SECTION A-A
Scale: 3/8"=1'-0"

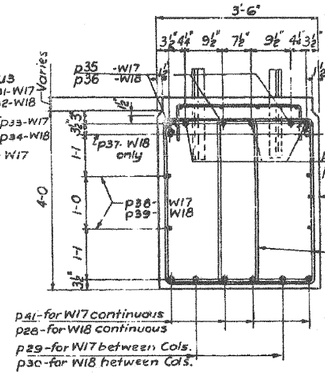

SECTION B-B
Scale: 3/8"=1'-0"

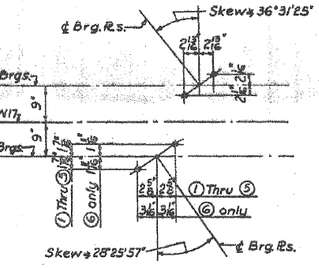

ANCHOR BOLT SETTING DIAGRAM
(Typical for Pier W17)

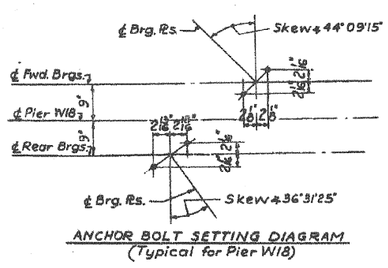

ANCHOR BOLT SETTING DIAGRAM
(Typical for Pier W18)

NOTE:
For additional pier sections and notes see sheet No. S30

CITY OF CHICAGO
DEPARTMENT OF PUBLIC WORKS
BUREAU OF ENGINEERING

SOUTHWEST ROUTE SUPERHIGHWAY
ELEVATED HIGHWAY
S. LAKE PARK AVE. TO S. LAKE SHORE DRIVE
SECTION SW-1818.3-2H

PIERS W17 & W18

SCALE: AS NOTED DEC. 1964
SHEET NO. S-12 OF 99 SHEETS

DESIGNED BY A.J.A.
DRAWN BY B.B. 3-26-63
CHECKED BY A.J.A.
APPROVED BY K.A.

213-60L70_As-Builts.dgn

AECOM

USER NAME = auyeungh	DESIGNED -	REVISED -
	CHECKED -	REVISED -
PLOT SCALE =	DRAWN - HAY	REVISED -
PLOT DATE = 11/11/2014	CHECKED - ATB	REVISED -

STATE OF ILLINOIS
DEPARTMENT OF TRANSPORTATION

AS-BUILTS

SHEET NO. 50 OF 174 SHEETS

F.A.I. RTE.	SECTION	COUNTY	TOTAL SHEETS	SHEET NO.
55	2010-080-B	COOK	886	367
		CONTRACT NO. 60L70		
	ILLINOIS FED. AID PROJECT			

FOR INFORMATION ONLY

ROUTE NO.	SECTION	COUNTY	TOTAL SHEETS	SHEET NO.
F. A. I.—55	SW-1618.3-2H	COOK	99	34
FED. ROAD DIV. NO. 4	ILLINOIS	PROJECT I.G.-55-7(99)-289		

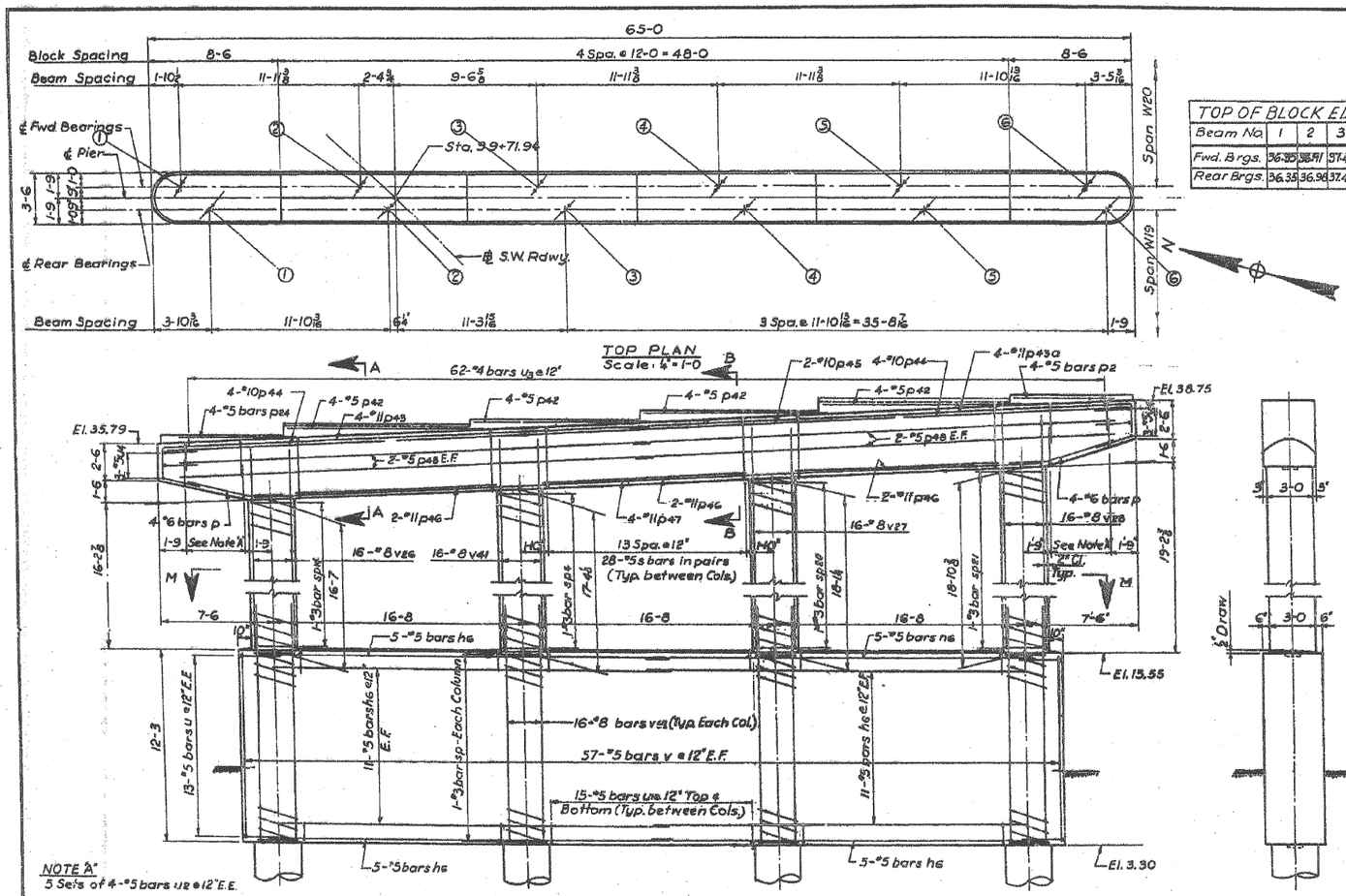

TOP OF BLOCK ELEVATIONS							
Beam No.	1	2	3	4	5	6
Fwd. Brgs.	36.35	36.71	37.47	38.03	38.38	39.05
Rear Brgs.	36.35	36.98	37.47	38.03	38.65	39.03

TOP PLAN
Scale: ¼"=1-0

NOTE "A"
3 Sets of 4-#5 bars u2 @ 12" E.E.

END VIEW
Scale: ¼"=1-0

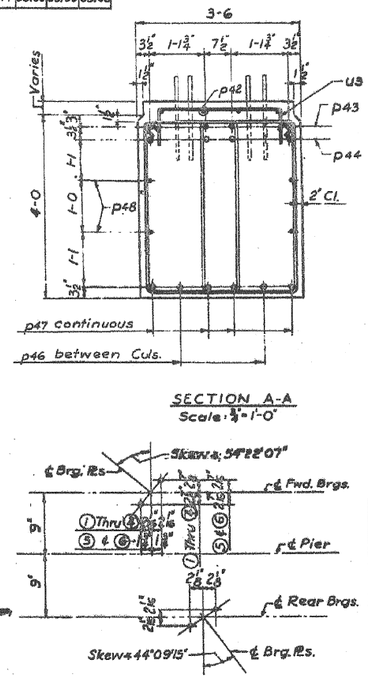

SECTION A-A
Scale: ¾"=1-0"

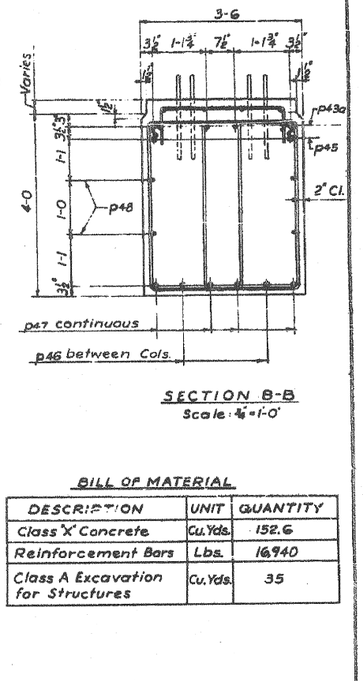

SECTION B-B
Scale: ¾"=1-0"

ANCHOR BOLT SETTING DIAGRAM

BILL OF MATERIAL

DESCRIPTION	UNIT	QUANTITY
Class 'X' Concrete	Cu. Yds.	152.6
Reinforcement Bars	Lbs.	16,940
Class A Excavation for Structures	Cu. Yds.	35

ELEVATION

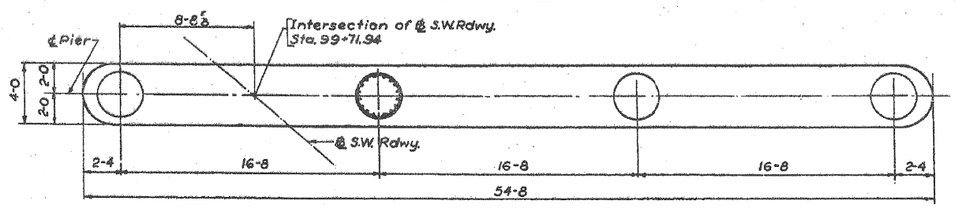

PLAN M-M
Scale: ¼"=1-0"

NOTE:
For additional pier sections & notes see sheet No. 530.

DESIGNED BY R.J.A.
DRAWN BY B.B. 3-25-63
CHECKED BY R.J.A.
APPROVED BY K.A.

CITY OF CHICAGO
DEPARTMENT OF PUBLIC WORKS
BUREAU OF ENGINEERING

SOUTHWEST ROUTE SUPERHIGHWAY
ELEVATED HIGHWAY
S. LAKE PARK AVE. TO S. LAKE SHORE DRIVE

SECTION SW-1618.3-2H

PIER W19

SCALE: AS NOTED DEC. 1964
SHEET NO. 5-13 OF 99 SHEETS

214-60L70_As-Builts.dgn

AECOM				STATE OF ILLINOIS DEPARTMENT OF TRANSPORTATION	AS-BUILTS	F.A.I. RTE.	SECTION	COUNTY	TOTAL SHEETS	SHEET NO.
	USER NAME = auyeungh	DESIGNED -	REVISED -			55	2010-080-B	COOK	886	368
		CHECKED -	REVISED -						CONTRACT NO. 60L70	
	PLOT SCALE =	DRAWN - HAY	REVISED -					ILLINOIS	FED. AID PROJECT	
	PLOT DATE = 11/11/2014	CHECKED - ATB	REVISED -		SHEET NO. 51 OF 174 SHEETS					

FOR INFORMATION ONLY

ROUTE NO.	SECTION	COUNTY	TOTAL SHEETS	SHEET NO.
F. A. I.—55	SW—1818.3—2H	COOK	99	35
FED. ROAD DIV. NO. 4	ILLINOIS	PROJECT I.G.—55—7(50)—289		

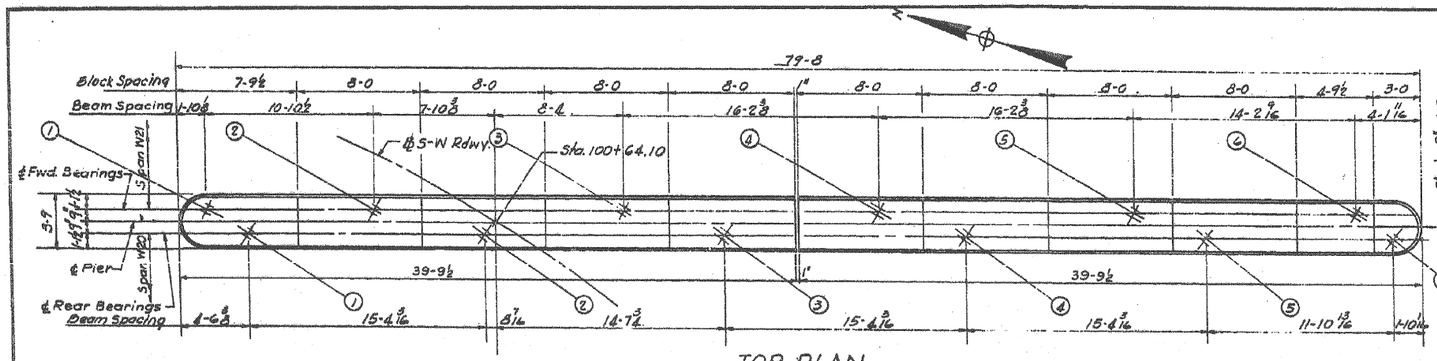

TOP PLAN
Scale ½"=1-0

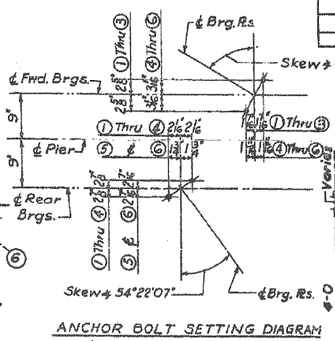

ANCHOR BOLT SETTING DIAGRAM
(Typical for all Beams)
Except as Noted

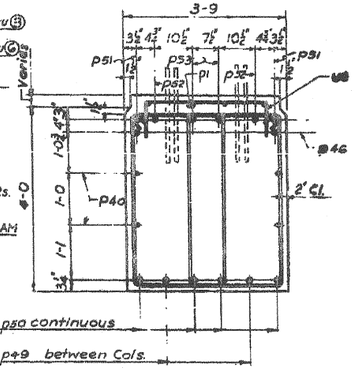

p50 continuous
p49 between Cols.

SECTION A-A
Scale ½"-1'-0"

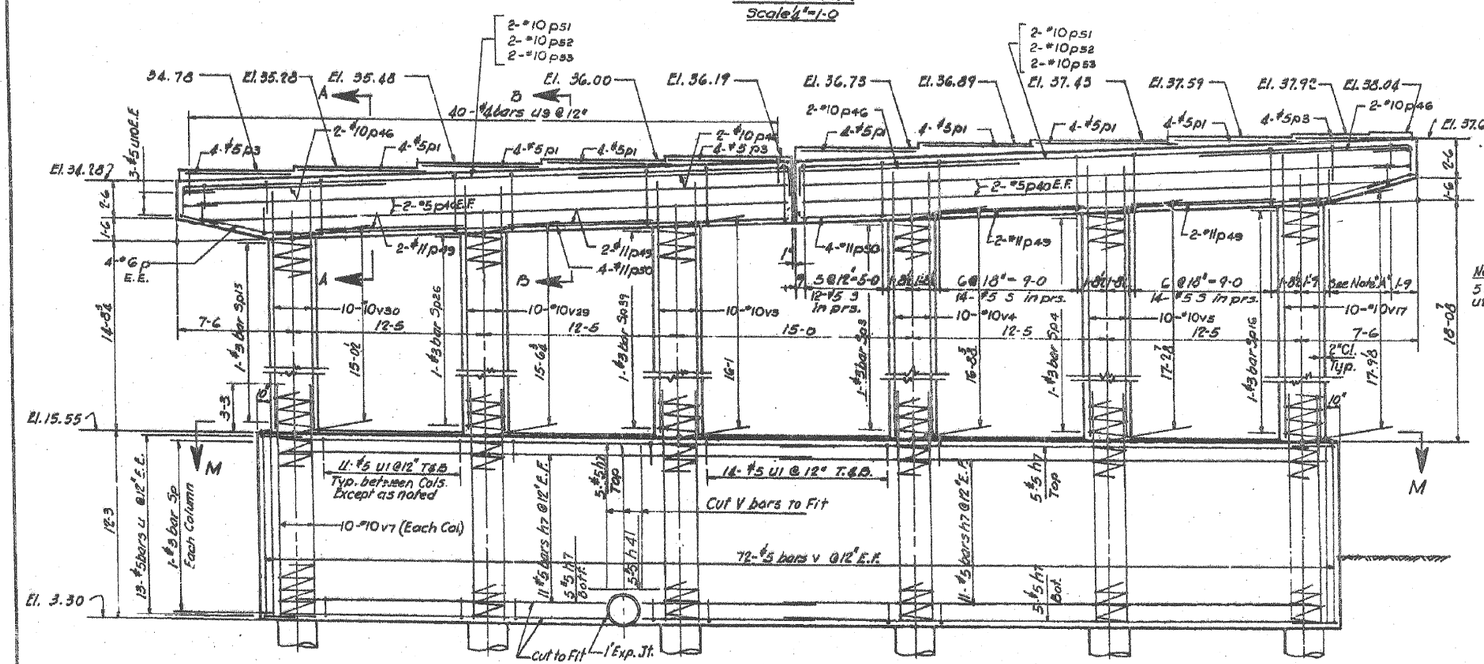

ELEVATION
Scale ¼"=1-0

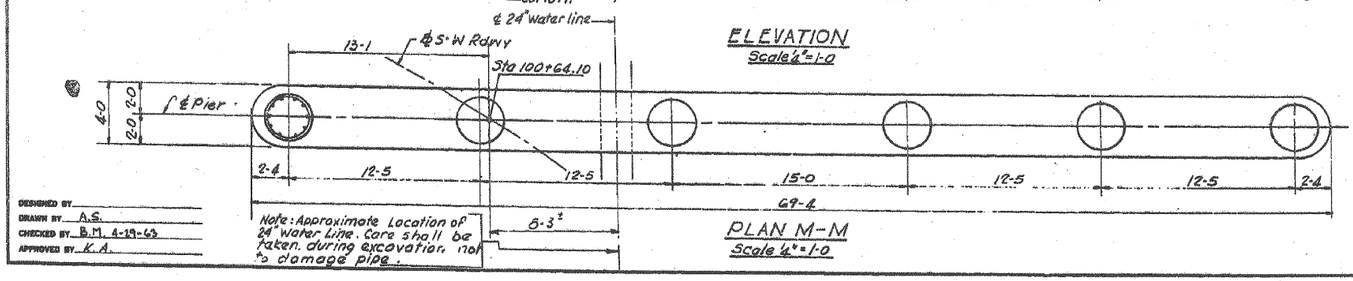

PLAN M-M
Scale ¼"=1-0

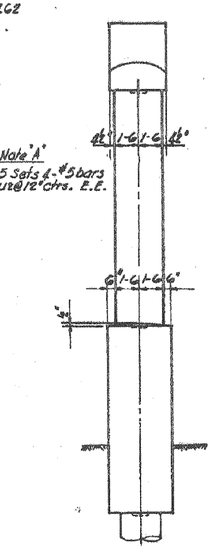

END VIEW

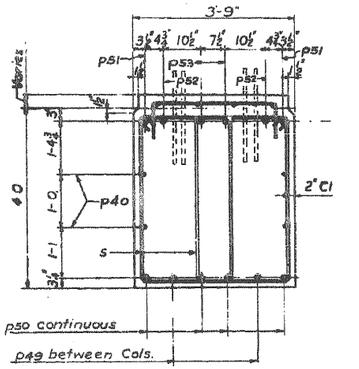

p50 continuous
p49 between Cols.

SECTION B-B
Scale ¾"-1'-0"

NOTE:
For additional pier sections and notes see sheet No. 5-30.

BILL OF MATERIAL

DESCRIPTION	UNIT	QUANTITY
Class X Concrete	Cu. Yds.	198.3
Reinforcement Bars	Lbs.	-,,020
Class 'A' Excavation for Structures	Cu. Yds.	48

DESIGNED BY
DRAWN BY A.S.
CHECKED BY B.M. 4-29-65
APPROVED BY K.A.

CITY OF CHICAGO
DEPARTMENT OF PUBLIC WORKS
BUREAU OF ENGINEERING

SOUTHWEST ROUTE SUPERHIGHWAY
ELEVATED HIGHWAY
S. LAKE PARK AVE. TO S. LAKE SHORE DRIVE
SECTION SW—1818.3—2H

PIER W20

SCALE: AS NOTED DEC. 1964
SHEET NO. 5-14 OF 99 SHEETS

215-60L70_As-Builts.dgn

AECOM

USER NAME = auyeungh	DESIGNED -	REVISED -
	CHECKED -	REVISED -
PLOT SCALE =	DRAWN - HAY	REVISED -
PLOT DATE = 11/11/2014	CHECKED - ATB	REVISED -

STATE OF ILLINOIS
DEPARTMENT OF TRANSPORTATION

AS-BUILTS
SHEET NO. 52 OF 174 SHEETS

F.A.I. RTE.	SECTION	COUNTY	TOTAL SHEETS	SHEET NO.
55	2010-080-B	COOK	886	369
		CONTRACT NO. 60L70		
	ILLINOIS FED. AID PROJECT			

FOR INFORMATION ONLY

ROUTE NO.	SECTION	COUNTY	TOTAL SHEETS	SHEET NO.
F.A.-L-55	SW-1818.3-2H	COOK	99	36
FED. ROAD DIV. NO. 4	ILLINOIS	PROJECT I.Q.-55-7(39)-289		

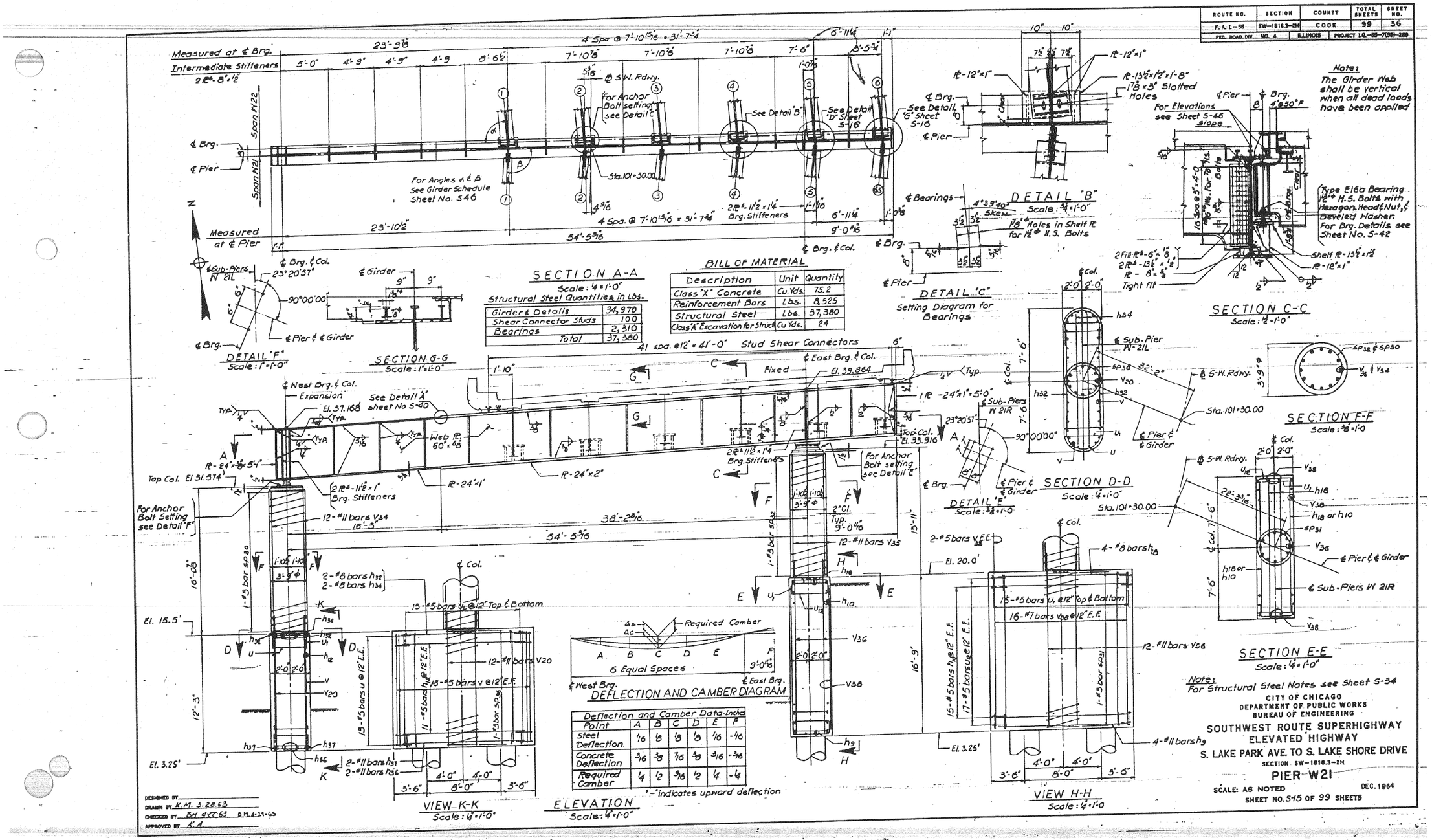

Note:
For Structural Steel Notes see Sheet S-34

CITY OF CHICAGO
DEPARTMENT OF PUBLIC WORKS
BUREAU OF ENGINEERING

SOUTHWEST ROUTE SUPERHIGHWAY
ELEVATED HIGHWAY
S. LAKE PARK AVE. TO S. LAKE SHORE DRIVE
SECTION SW-1818.3-2H
PIER W21

SCALE: AS NOTED DEC. 1964
SHEET NO. S-15 OF 99 SHEETS

216-60L70_As-Builts.dgn

AECOM

USER NAME = auyeungh	DESIGNED -	REVISED -
	CHECKED -	REVISED -
PLOT SCALE =	DRAWN - HAY	REVISED -
PLOT DATE = 11/11/2014	CHECKED - ATB	REVISED -

STATE OF ILLINOIS
DEPARTMENT OF TRANSPORTATION

AS-BUILTS
SHEET NO. 53 OF 174 SHEETS

F.A.I. RTE.	SECTION	COUNTY	TOTAL SHEETS	SHEET NO.
55	2010-080-B	COOK	886	370
		CONTRACT NO. 60L70		
	ILLINOIS FED. AID PROJECT			

FOR INFORMATION ONLY

ROUTE NO.	SECTION	COUNTY	TOTAL SHEETS	SHEET NO.
F. A. I. – 55	SW–1818.3–2H	COOK	99	37
FED. ROAD DIV. NO. 4	ILLINOIS	PROJECT I.Q.–55–7(39)–259		

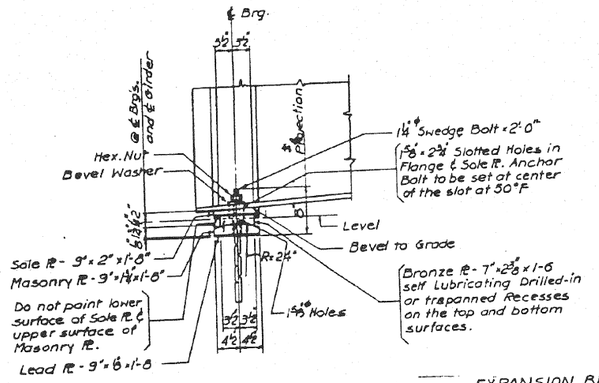

EXPANSION BEARING
Scale: 1"=1'-0"

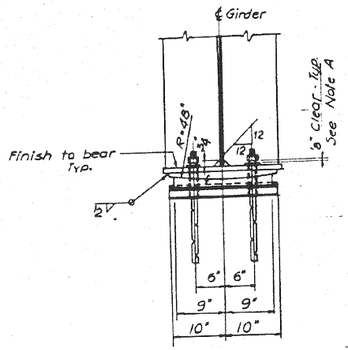

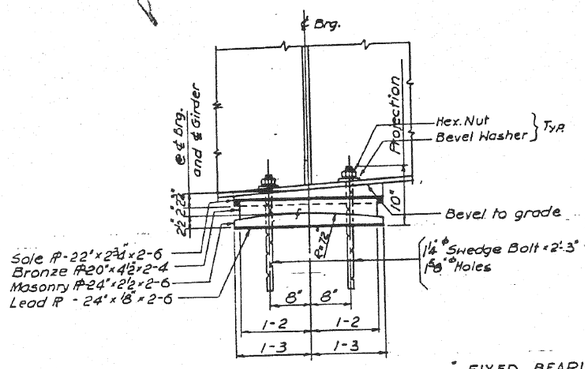

FIXED BEARING
Scale: 1"=1'-0"

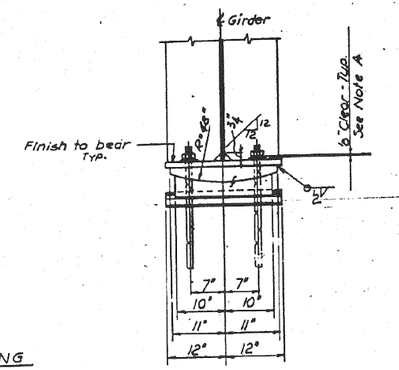

Note A - After nut is adjusted for '6" clearance, burr off threads at face of nut with a pointed tool.

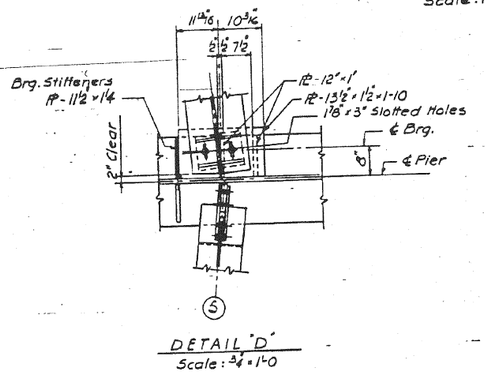

DETAIL "D"
Scale: 3/4"=1'-0

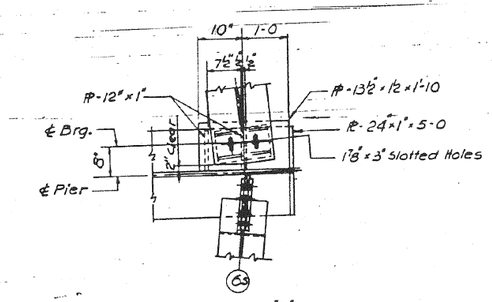

DETAIL "G"
Scale: 3/4"=1'-0

Note:
For Structural Steel Notes see Sheet S-34
For Detail 'D' & 'G' See Sheet No S-15

CITY OF CHICAGO
DEPARTMENT OF PUBLIC WORKS
BUREAU OF ENGINEERING

SOUTHWEST ROUTE SUPERHIGHWAY
ELEVATED HIGHWAY
S. LAKE PARK AVE. TO S. LAKE SHORE DRIVE
SECTION SW–1818.3–2H

PIER W21 BEARING DETAILS

SCALE: AS NOTED DEC. 1964
SHEET NO. S-16 OF 99 SHEETS

DESIGNED BY B.H.
DRAWN BY K.M.
CHECKED BY B.H.
APPROVED BY K.A.

217-60L70_As-Builts.dgn

AECOM

USER NAME = auyeungh	DESIGNED -	REVISED -
	CHECKED -	REVISED -
PLOT SCALE =	DRAWN - HAY	REVISED -
PLOT DATE = 11/11/2014	CHECKED - ATB	REVISED -

STATE OF ILLINOIS
DEPARTMENT OF TRANSPORTATION

AS–BUILTS
SHEET NO. 54 OF 174 SHEETS

F.A.I. RTE.	SECTION	COUNTY	TOTAL SHEETS	SHEET NO.
55	2010-080-B	COOK	886	371
		CONTRACT NO. 60L70		
	ILLINOIS FED. AID PROJECT			

FOR INFORMATION ONLY

ROUTE NO.	SECTION	COUNTY	TOTAL SHEETS	SHEET NO.
F.A.I.-55	SW-1818.3-2H	COOK	99	58
FED. ROAD DIV. NO. 4	ILLINOIS	PROJECT I.G.-55-7(58)-288		

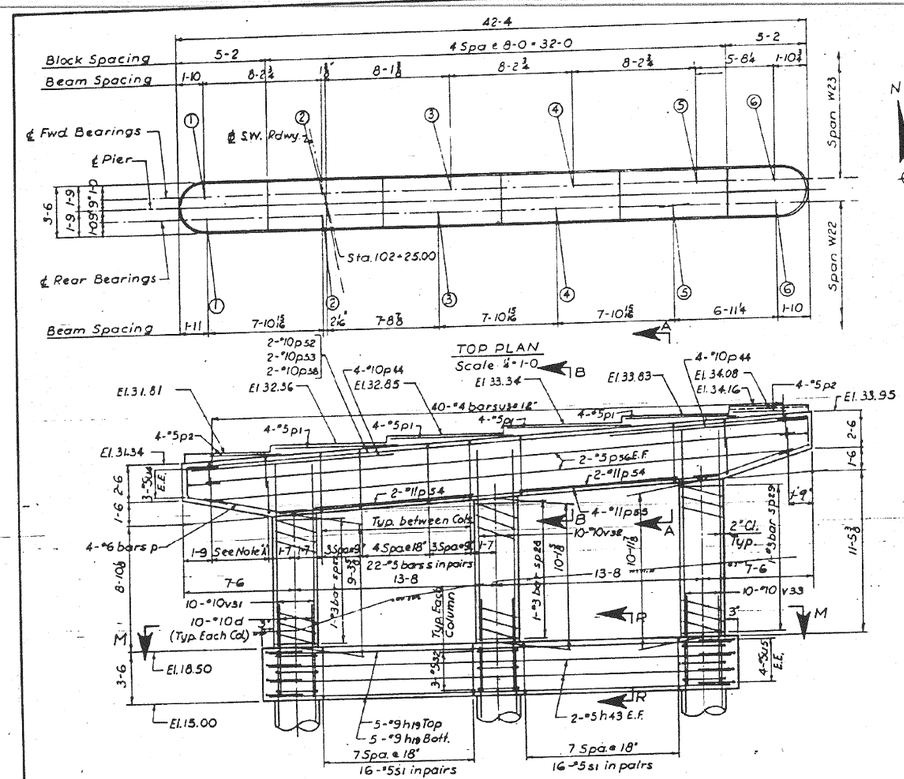

NOTE A
6 Sets of 4-#5 bars u2@10" E.E.

ELEVATION
Scale: ¼"=1'-0"

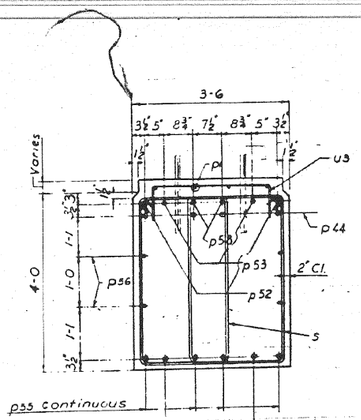

FOR INFORMATION ONLY

ROUTE NO.	SECTION	COUNTY	TOTAL SHEETS	SHEET NO.
F. A. I.—55	SW—1818.3—2H	COOK	99	38
FED. ROAD DIV. NO. 4	ILLINOIS	PROJECT I.C.—55—7(59)—288		

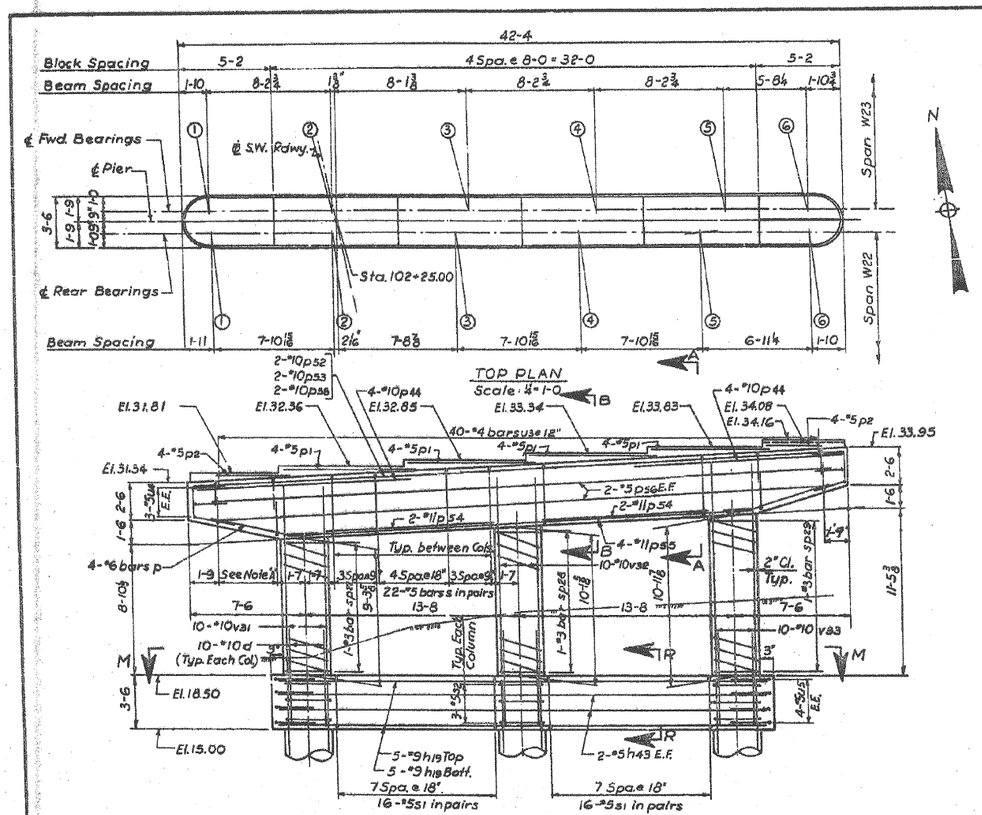

BILL OF MATERIAL

DESCRIPTION	UNIT	QUANTITY
Class "X" Concrete	Cu. Yds.	45.1
Reinforcement Bars	Lbs.	8,565
Class "X" Excavation for Structures	Cu. Yds.	26

NOTE:
For additional pier sections & notes see sheet No. 530.

DESIGNED BY RJA
DRAWN BY B.B. 3-20-63
CHECKED BY RJA
APPROVED BY K.A.

CITY OF CHICAGO
DEPARTMENT OF PUBLIC WORKS
BUREAU OF ENGINEERING

SOUTHWEST ROUTE SUPERHIGHWAY
ELEVATED HIGHWAY
S. LAKE PARK AVE. TO S. LAKE SHORE DRIVE
SECTION SW—1818.3—2H

PIER W22

SCALE: AS NOTED DEC. 1964
SHEET NO. 5-17 OF 99 SHEETS

219-60L70_As-Builts.dgn

AECOM	USER NAME = auyeungh	DESIGNED -	REVISED -	STATE OF ILLINOIS DEPARTMENT OF TRANSPORTATION
		CHECKED -	REVISED -	
	PLOT SCALE =	DRAWN - HAY	REVISED -	
	PLOT DATE = 11/11/2014	CHECKED - ATB	REVISED -	

AS-BUILTS

SHEET NO. 56 OF 174 SHEETS

F.A.I. RTE.	SECTION	COUNTY	TOTAL SHEETS	SHEET NO.
55	2010-080-B	COOK	886	373
		CONTRACT NO. 60L70		
	ILLINOIS FED. AID PROJECT			

FOR INFORMATION ONLY

ROUTE NO.	SECTION	COUNTY	TOTAL SHEETS	SHEET NO.
F.A.I.-55	SW-1818.3-2H	COOK	99	39
FED. ROAD DIV. NO. 4	ILLINOIS	PROJECT I.Q.-55-7(39)-389		

ELEVATIONS TOP OF BLOCK											
Beam No.	1	2	3	4	5	6	7	8	9	10	11
Forward Brgs.	37.07	37.34	37.47	37.47	37.43	37.26	37.09	36.97	36.89	36.77	36.61
Rear Brgs.	37.07	37.34	37.47	37.47	37.43	37.26	37.09	36.97	36.77	36.61	

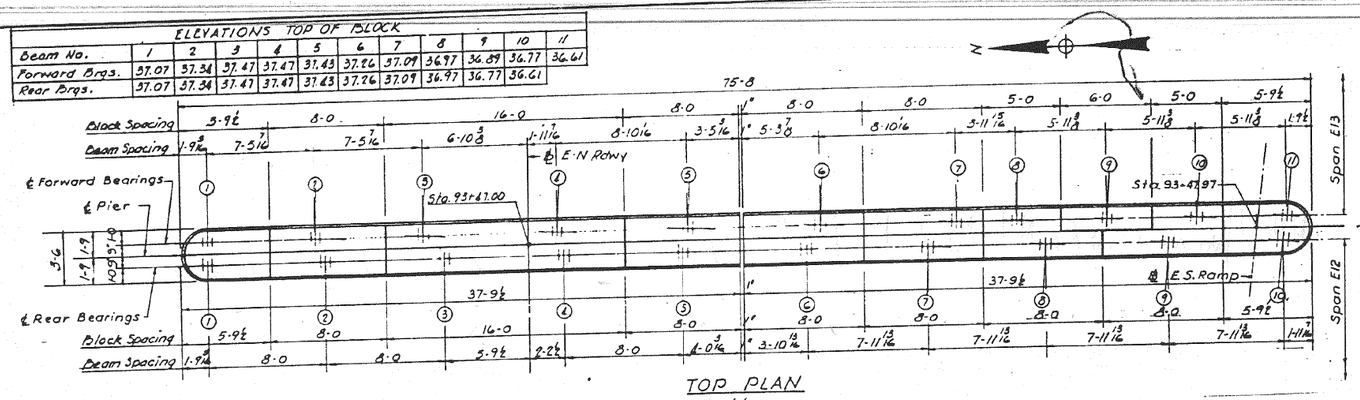

TOP PLAN
Scale 1/4"=1'-0"

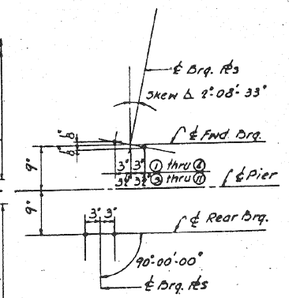

ANCHOR BOLT SETTING DIAGRAM
(Typ for all beams except as noted)

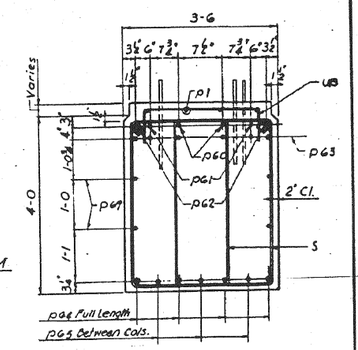

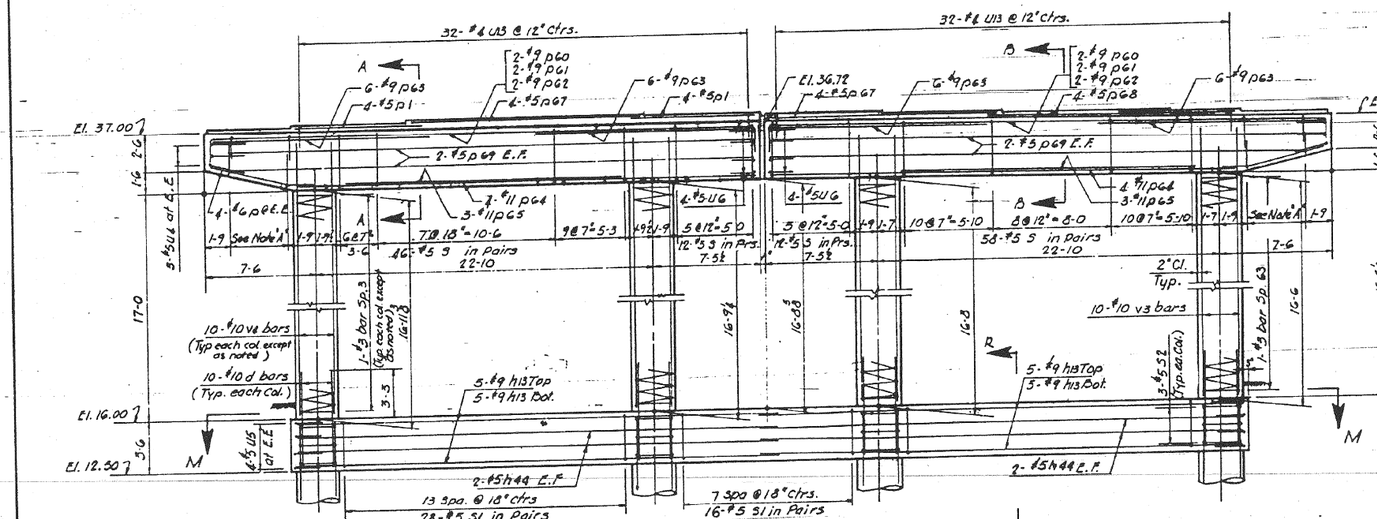

ELEVATION
Scale 1/4"=1'-0"

END VIEW
Scale 1/4"=1'-0"

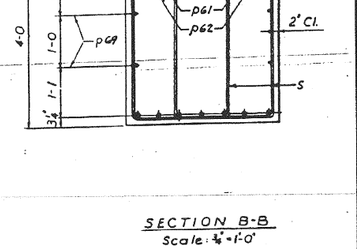

SECTION A-A
Scale 3/4"=1'-0"

SECTION B-B
Scale 3/4"=1'-0"

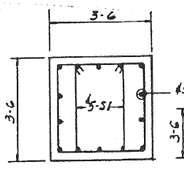

SECTION R-R
Scale 1/2"=1'-0"

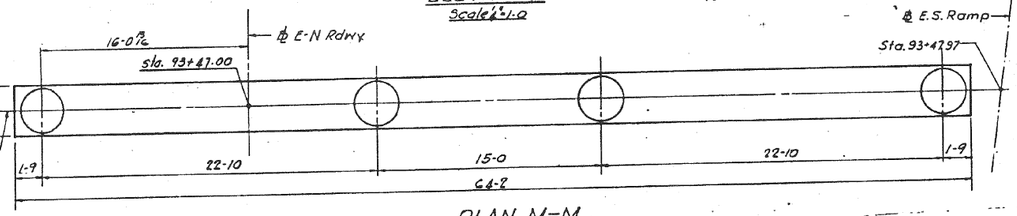

PLAN M-M
Scale 1/4"=1'-0"

BILL OF MATERIAL

DESCRIPTION	UNIT	QUANTITY
Class X Concrete	Cu.Yds.	69.0
Reinforcement Bars	Lbs.	16,290
Class A Excavation for Structure	Cu.Yds.	37

NOTE:
For additional pier sections and notes see sheet No. 530

CITY OF CHICAGO
DEPARTMENT OF PUBLIC WORKS
BUREAU OF ENGINEERING

SOUTHWEST ROUTE SUPERHIGHWAY
ELEVATED HIGHWAY
S. LAKE PARK AVE. TO S. LAKE SHORE DRIVE
SECTION SW-1818.3-2H

PIER E12

SCALE: AS NOTED DEC. 1964
SHEET NO. S-18 OF 99 SHEETS

DESIGNED BY
DRAWN BY A.S.
CHECKED BY B.M. 4.29.65
APPROVED BY K.A.

220-60L70_As-Builts.dgn

AECOM

USER NAME = auyeungh	DESIGNED -	REVISED -
	CHECKED -	REVISED -
PLOT SCALE =	DRAWN - HAY	REVISED -
PLOT DATE = 11/11/2014	CHECKED - ATB	REVISED -

STATE OF ILLINOIS
DEPARTMENT OF TRANSPORTATION

AS-BUILTS
SHEET NO. 57 OF 174 SHEETS

F.A.I. RTE.	SECTION	COUNTY	TOTAL SHEETS	SHEET NO.
55	2010-080-B	COOK	886	374
		CONTRACT NO. 60L70		
	ILLINOIS FED. AID PROJECT			

FOR INFORMATION ONLY

ROUTE NO.	SECTION	COUNTY	TOTAL SHEETS	SHEET NO.
F.A.I.-55	SW-1818.3-2H	COOK	99	40
FED. ROAD DIV. NO. 4	ILLINOIS	PROJECT I.G.-55-7(38)-288		

BILL OF MATERIAL

DESCRIPTION	UNIT	QUANTITY
Class "X" Concrete	Cu. Yds.	218.1
Reinforcement Bars	Lbs.	23,850
Class "A" Excavation for Structures	Cu. Yds.	71

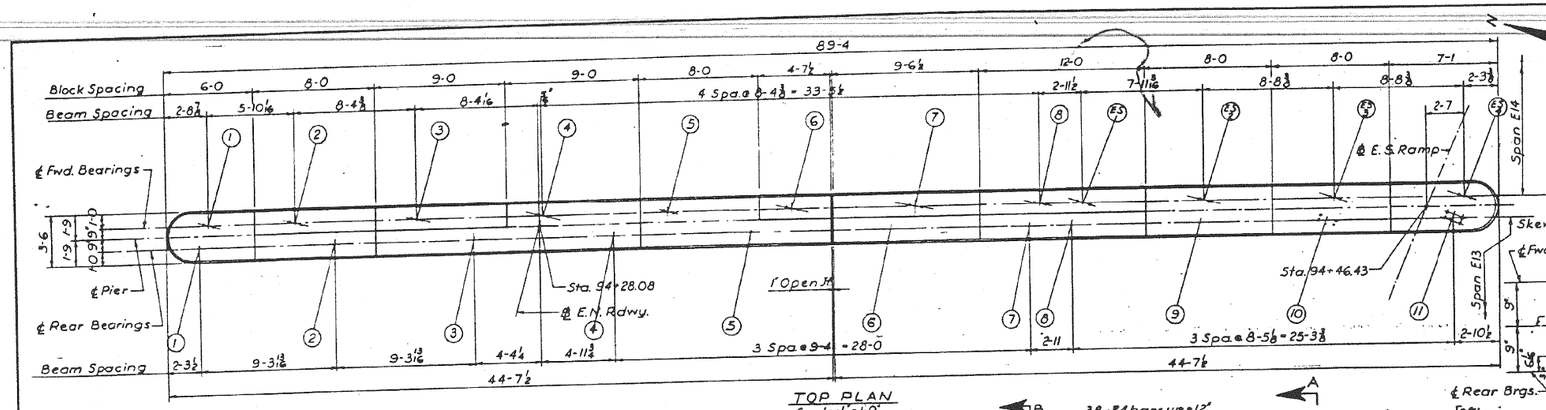

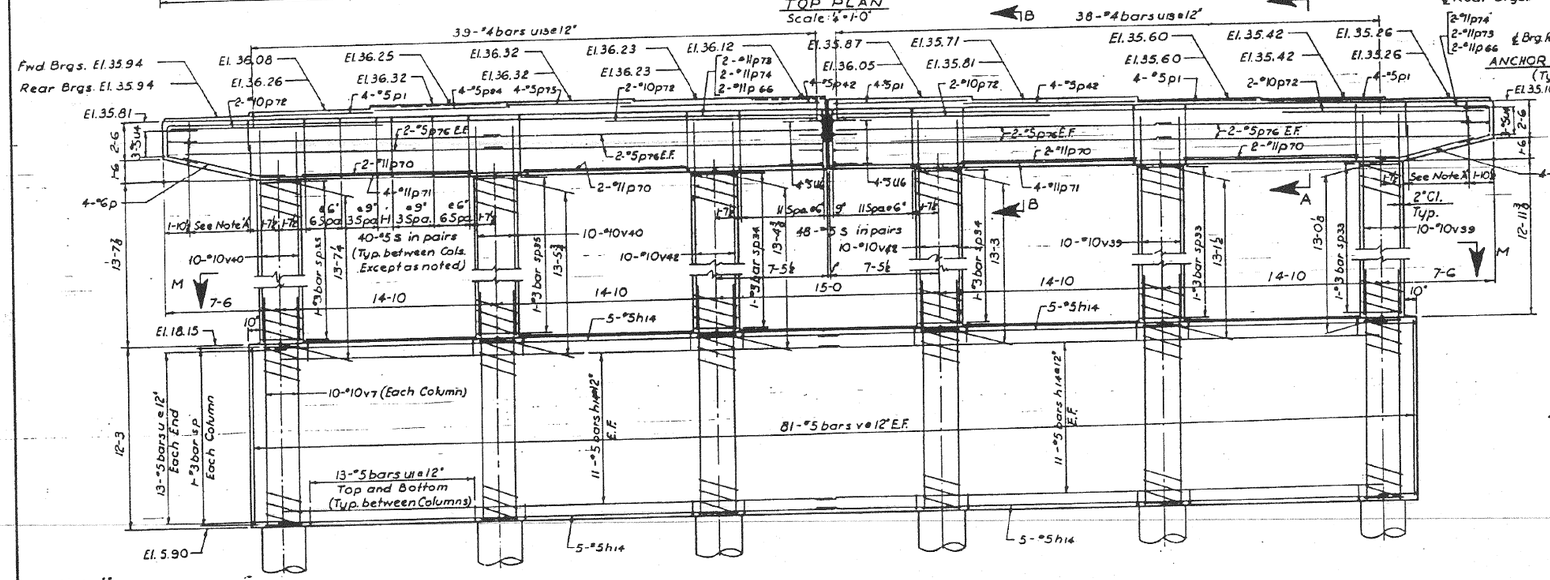

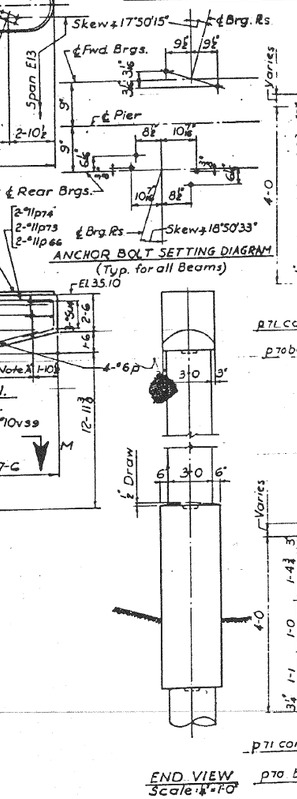

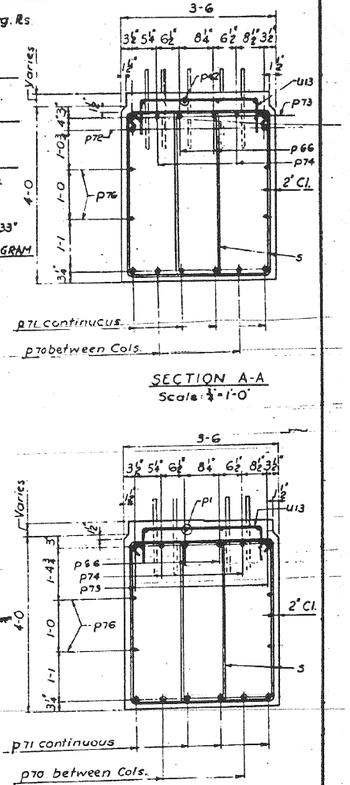

NOTE: For additional pier sections and notes see sheet No. 5-30

CITY OF CHICAGO
DEPARTMENT OF PUBLIC WORKS
BUREAU OF ENGINEERING

SOUTHWEST ROUTE SUPERHIGHWAY
ELEVATED HIGHWAY
S. LAKE PARK AVE. TO S. LAKE SHORE DRIVE
SECTION: SW-1818.3-2H

PIER E13

SCALE: AS NOTED
DEC. 1964
SHEET NO. 5-19 OF 99 SHEETS

DESIGNED BY B.H.
DRAWN BY B.B. 3-14-63
CHECKED BY B.M. 4-19-63
APPROVED BY K.A.

221-60L70_As-Builts.dgn

AECOM

USER NAME = auyeungh	DESIGNED -	REVISED -
	CHECKED -	REVISED -
PLOT SCALE =	DRAWN - HAY	REVISED -
PLOT DATE = 11/11/2014	CHECKED - ATB	REVISED -

STATE OF ILLINOIS
DEPARTMENT OF TRANSPORTATION

AS-BUILTS
SHEET NO. 58 OF 174 SHEETS

F.A.I. RTE.	SECTION	COUNTY	TOTAL SHEETS	SHEET NO.
55	2010-080-B	COOK	886	375
		CONTRACT NO. 60L70		
	ILLINOIS	FED. AID PROJECT		

FOR INFORMATION ONLY

ROUTE NO.	SECTION	COUNTY	TOTAL SHEETS	SHEET NO.
F.A.I.—90	SW-1818.3-2H	COOK	99	41
FED. ROAD DIV. NO. 4	ILLINOIS	PROJECT I.G.-39-7(39)-289		

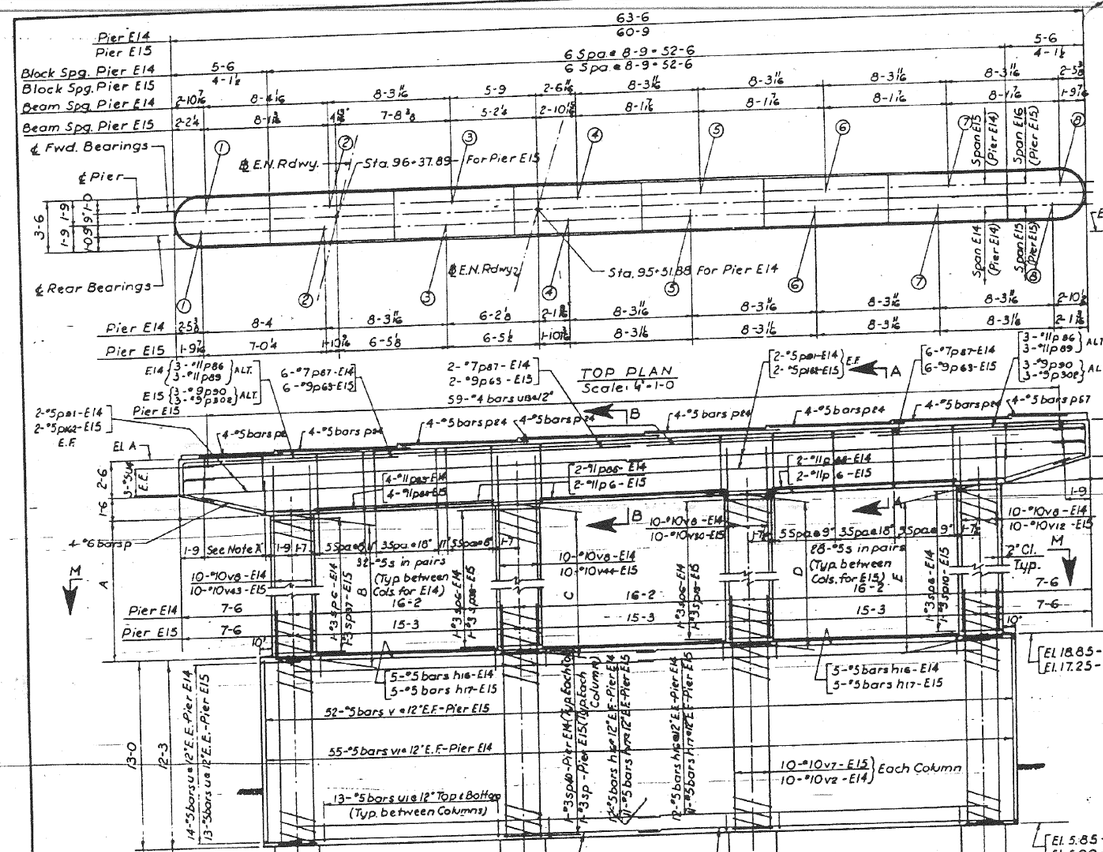
Pier E14
Pier E15
Block Spg. Pier E14
Block Spg. Pier E15
Beam Spg. Pier E14
Beam Spg. Pier E15
℄ Fwd. Bearings
℄ Pier
℄ Rear Bearings
℄ E.N. Rdwy.
Sta. 96+37.89 For Pier E15
Sta. 95+51.88 For Pier E14
63-6
60-9
6 Spa @ 8-9 = 52-6
Span E14 (Pier E14)
Span E15 (Pier E15)
Span E16 (Pier E15)
Pier E14 2-5½
Pier E15 1-9½
8-4
7-0¼
8-3⅛
1-10⅜
6-2⅝
6-5⅛
8-3⅛
2-10⅛
2-1⅛
TOP PLAN
Scale: ¼"=1-0
E14 (3-#11 p86 ALT. 3-#11 p89)
E15 (3-#9 p90 ALT. 3-#9 p90E)
2-#5 p81-E14
2-#5 p82-E15
E.F
6-#7 p87-E14
6-#9 p63-E15
2-#7 p87-E14
2-#9 p63-E15
59-#4 bars u@4 1/2"
A
B
4-#5 bars p84
4-#5 bars p85
4-#5 bars p82
4-#5 bars p83
El. A
El. B
2-#11 p88-E14
2-#11 p6-E15
4-#11 p87-E14
4-#11 p87-E15
#6 Bars p
See Note X
5 Spa @ 3'-5" in pairs (Typ. between Cols. for E14)
16-2
15-3
10-#10 v8-E14
10-#10 v83-E15
10-#10 v84-E15
10-#10 v80-E15
#3 Spac.-E14
#3 Spac.-E15
#3 Spac.-E16
#3 Spac.-E17
#3 Spac.-E18
#3 Spac.-E19
#3 Spac.-E20
#3 Spac.-E21
#3 Spac.-E22
#3 Spac.-E23
#3 Spac.-E24
#3 Spac.-E25
#3 Spac.-E26
#3 Spac.-E27
#3 Spac.-E28
#3 Spac.-E29
#3 Spac.-E30
#3 Spac.-E31
#3 Spac.-E32
#3 Spac.-E33
#3

FOR INFORMATION ONLY

ROUTE NO.	SECTION	COUNTY	TOTAL SHEETS	SHEET NO.
F. A. I.—55	SW-1818.3-2H	COOK	99	42
FED. ROAD DIV. NO. 4	ILLINOIS	PROJECT I.G.—55-7(99)-289		

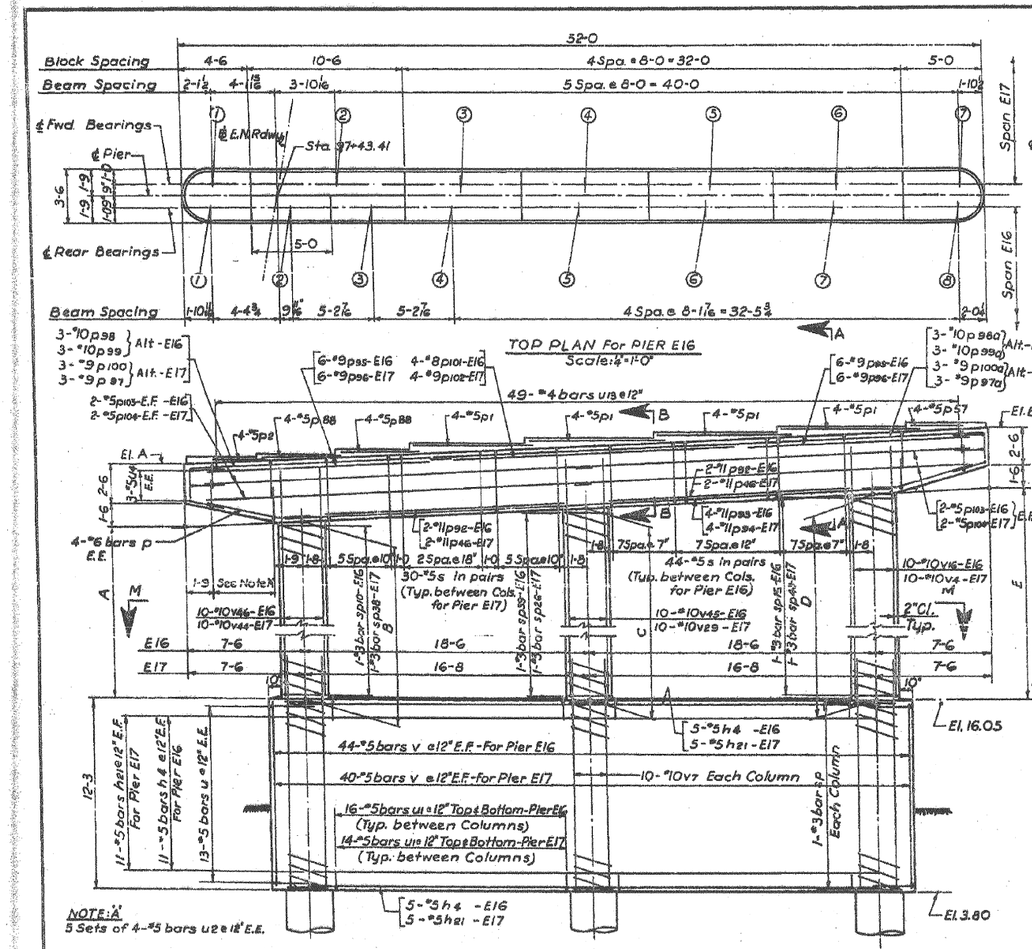

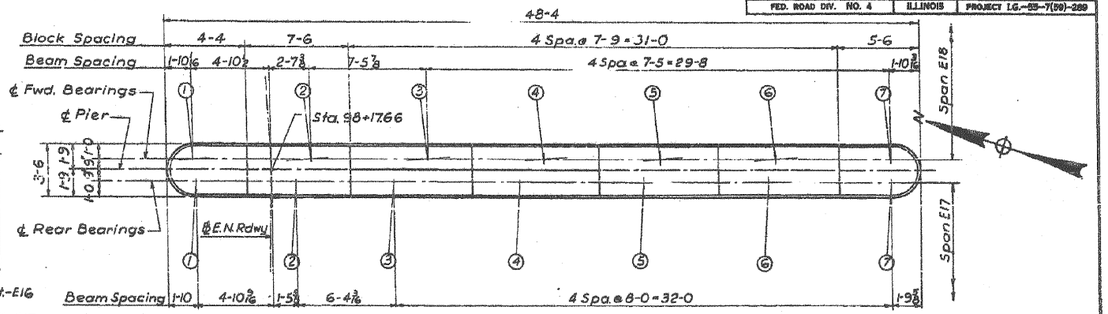

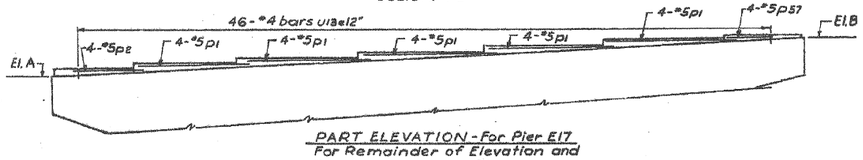

PIER	ELEVATIONS A	B	Top of Block Rear Bearings 1	2	3	4	5	6	7	8	Top of Block Forward Bearings 1	2	3	4	5	6	7	DIMENSIONS A	B	C	D	E
E16	34.79	37.38	35.30	35.60	35.87	36.14	36.56	36.99	37.38	37.63	35.30	35.74	36.14	36.56	36.99	37.38	37.63	14-8 3/8	15-1 3/8	16-0 3/8	16-11 1/2	17-4
E17	34.32	36.88	34.74	35.15	35.52	35.98	36.47	36.85	37.14	—	34.74	35.15	35.65	36.08	36.47	36.85	37.14	14-3 1/4	14-8	15-6 5/8	16-5 1/4	16-10

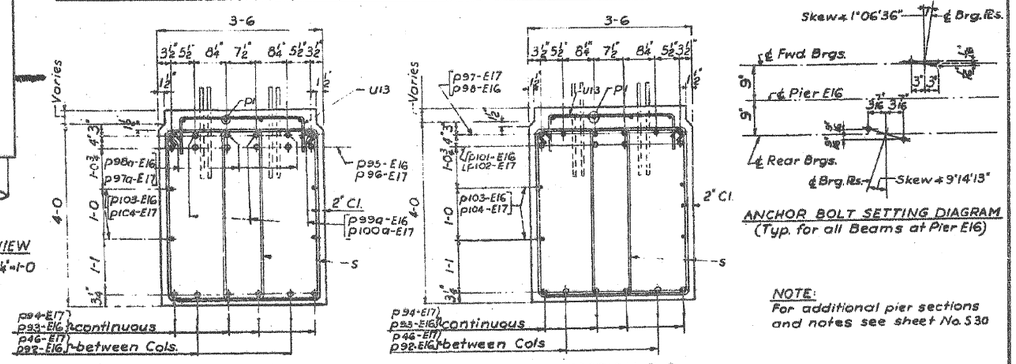

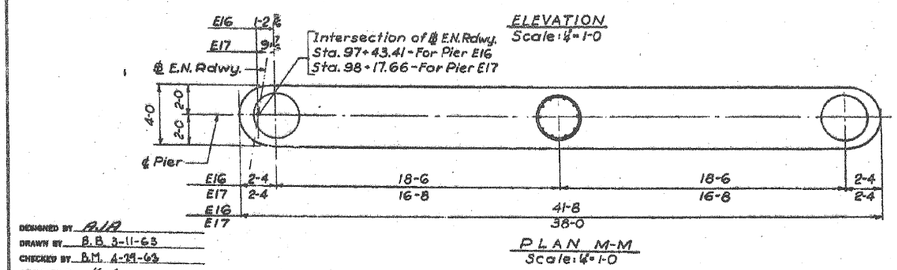

BILL OF MATERIAL

DESCRIPTION	UNIT	QUANTITY Pier E16	Pier E17
Class 'X' Concrete	Cu. Yds.	115.5	106.2
Reinforcement Bars	Lbs.	13,470	12,270
Class A Excavation for Structures	Cu. Yds.	31	29

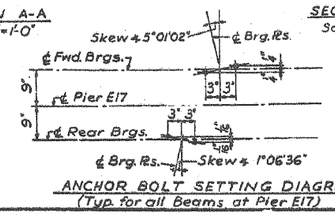

DESIGNED BY B.J.A
DRAWN BY B.B. 3-11-65
CHECKED BY B.M. A-19-65
APPROVED BY K.A.

CITY OF CHICAGO
DEPARTMENT OF PUBLIC WORKS
BUREAU OF ENGINEERING

SOUTHWEST ROUTE SUPERHIGHWAY
ELEVATED HIGHWAY
S. LAKE PARK AVE. TO S. LAKE SHORE DRIVE
SECTION SW-1818.3-2H

PIERS E16 & E17

SCALE: AS NOTED DEC. 1964
SHEET NO. S-21 OF 99 SHEETS

223-60L70_As-Builts.dgn

AECOM

USER NAME = auyeungh	DESIGNED -	REVISED -
	CHECKED -	REVISED -
PLOT SCALE =	DRAWN - HAY	REVISED -
PLOT DATE = 11/11/2014	CHECKED - ATB	REVISED -

STATE OF ILLINOIS
DEPARTMENT OF TRANSPORTATION

AS-BUILTS

SHEET NO. 60 OF 174 SHEETS

F.A.I. RTE.	SECTION	COUNTY	TOTAL SHEETS	SHEET NO.
55	2010-080-B	COOK	886	377
		CONTRACT NO. 60L70		
	ILLINOIS	FED. AID PROJECT		

FOR INFORMATION ONLY

ROUTE NO.	SECTION	COUNTY	TOTAL SHEETS	SHEET NO.
F. A. I. – 55	SW-1818.3-2H	COOK	99	43
FED. ROAD DIV. NO. 4	ILLINOIS	PROJECT I.Q.-55-7(59)-288		

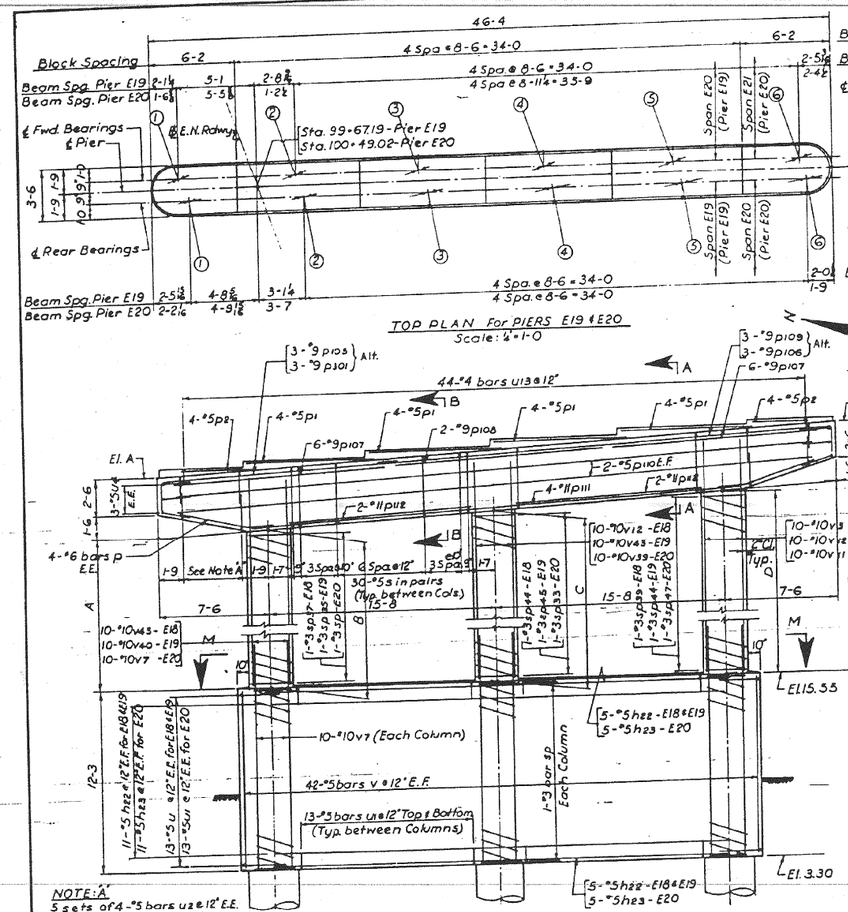

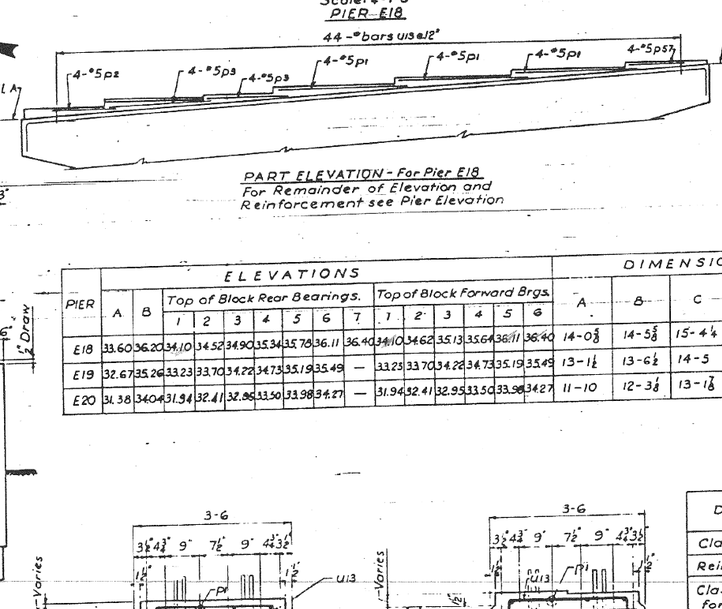

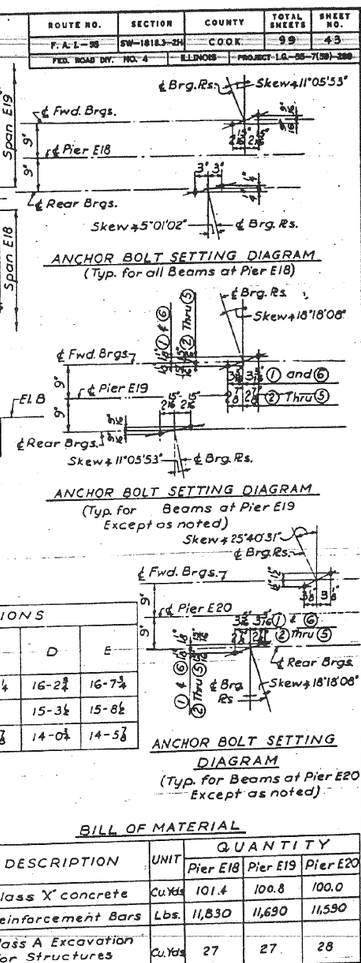

PIER	A	B	ELEVATIONS: Top of Block Rear Bearings. 1	2	3	4	5	6	7	Top of Block Forward Brgs. 1	2	3	4	5	6	DIMENSIONS: A	B	C	D	E
E18	33.60	36.20	34.10	34.52	34.90	35.34	35.78	36.11	36.40	34.10	34.62	35.13	35.64	36.11	36.40	14-0⅜	14-5⅜	15-4¼	16-2⅝	16-7⅛
E19	32.67	35.26	33.23	33.70	34.22	34.73	35.19	35.49	—	33.23	33.70	34.22	34.73	35.19	35.49	13-1½	13-6½	14-5	15-3½	15-8½
E20	31.38	34.04	31.94	32.41	32.86	33.30	33.98	34.27	—	31.94	32.41	32.95	33.50	33.98	34.27	11-10	12-3½	13-1⅜	14-0¾	14-5⅜

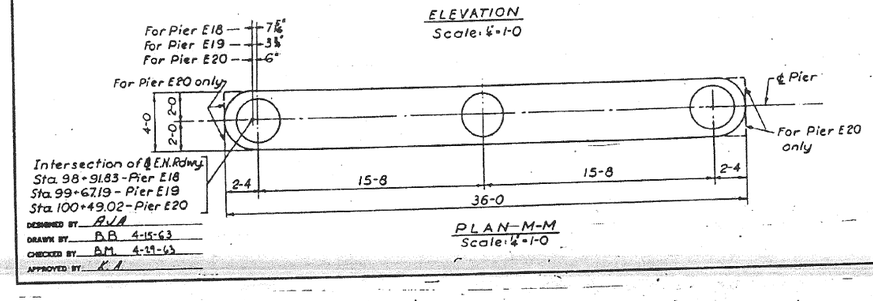

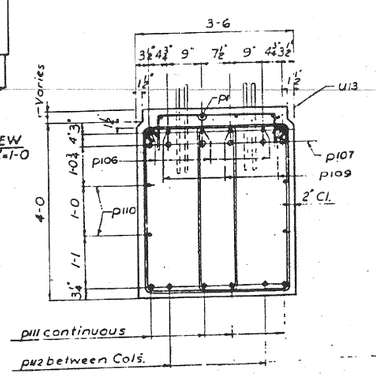

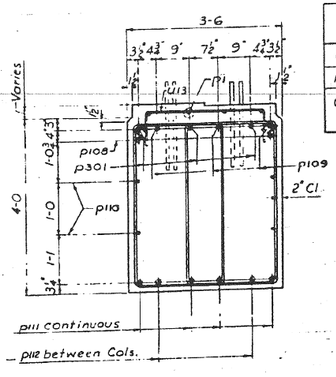

BILL OF MATERIAL

DESCRIPTION	UNIT	QUANTITY Pier E18	Pier E19	Pier E20
Class 'X' concrete	Cu.Yds.	101.4	100.8	100.0
Reinforcement Bars	Lbs.	11,830	11,690	11,590
Class A Excavation for Structures	Cu.Yds.	27	27	28

NOTE: For additional pier sections and notes see sheet No. 330

CITY OF CHICAGO
DEPARTMENT OF PUBLIC WORKS
BUREAU OF ENGINEERING

SOUTHWEST ROUTE SUPERHIGHWAY
ELEVATED HIGHWAY
S. LAKE PARK AVE TO S. LAKE SHORE DRIVE
SECTION SW-1818.3-2H

PIERS E18, E19 & E20

DESIGNED BY A.V.A
DRAWN BY B.B. 4-15-63
CHECKED BY B.M. 4-19-63
APPROVED BY K.A.

SCALE: AS NOTED
DEC. 1964
SHEET NO. 5-22 OF 99 SHEETS

224-60L70_As-Builts.dgn

AECOM

USER NAME =	duyeungh	DESIGNED -	REVISED -
		CHECKED -	REVISED -
PLOT SCALE =		DRAWN - HAY	REVISED -
PLOT DATE =	11/11/2014	CHECKED - ATB	REVISED -

STATE OF ILLINOIS
DEPARTMENT OF TRANSPORTATION

AS-BUILTS
SHEET NO. 61 OF 174 SHEETS

F.A.I. RTE.	SECTION	COUNTY	TOTAL SHEETS	SHEET NO.
55	2010-080-B	COOK	886	378
		CONTRACT NO. 60L70		
	ILLINOIS FED. AID PROJECT			

FOR INFORMATION ONLY

ROUTE NO.	SECTION	COUNTY	TOTAL SHEETS	SHEET NO.
F. A. I.—55	SW-1818.3-2H	COOK	99	44
FED. ROAD DIV. NO. 4	ILLINOIS	PROJECT I.R.-55-7(259)-889		

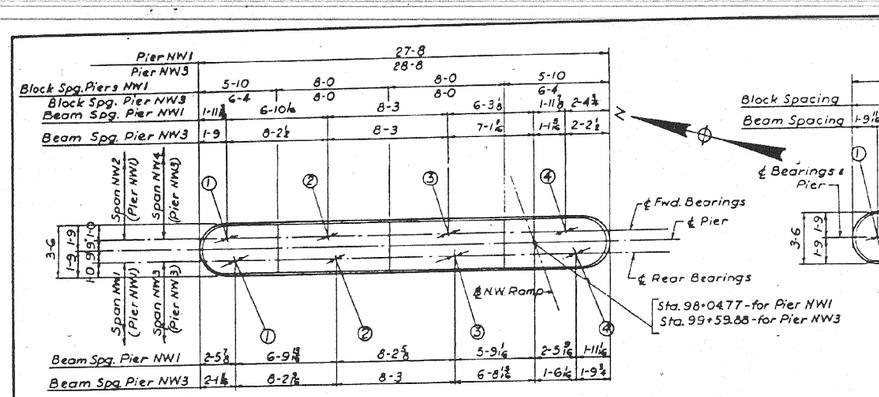

TOP PLAN For PIERS NW1&NW3
Scale: ¼"-1'-0"

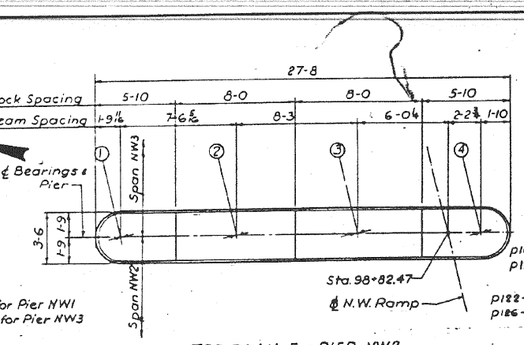

TOP PLAN For PIER NW2
Scale: ¼"-1'-0"

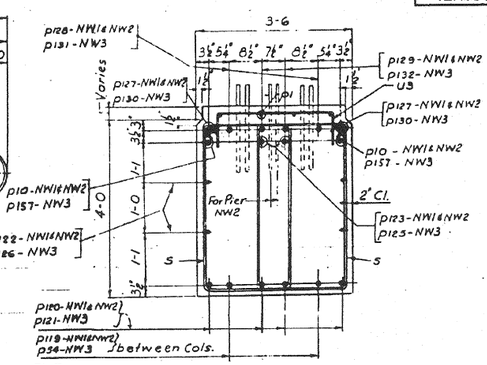

SECTION A-A
Scale ¾"-1'-0"



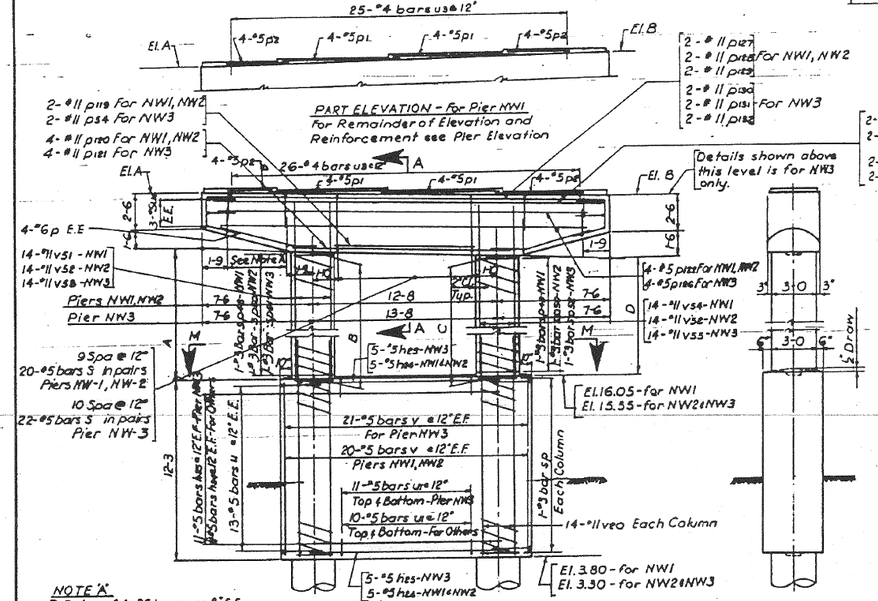

PART ELEVATION - For Pier NW2
For Remainder of Elevation and
Reinforcement see Pier Elevation

2-#11 p127
2-#11 p128 } For NW1, NW2
2-#11 p129
2-#11 p130
2-#11 p131 } For NW3
2-#11 p132

2-#11 p10
2-#11 p123 } For NW1 & NW2

2-#11 p157
2-#11 p125 } For NW3

BILL OF MATERIAL

DESCRIPTION	UNIT	QUANTITY		
		Pier NW1	Pier NW2	Pier NW3
Class 'X' Concrete	Cu. Yds.	54.3	54.9	58.3
Reinforcement Bars	Lbs.	10,270	10,130	10,920
Class 'A' Excavation for Structures	Cu. Yds.	13	12	13

PIER	EL. A	EL. B	Top of Block Elevations. Beam No. 1	2	3	4	DIMENSIONS A	B	C	D	E
NW1	39.30	39.94	39.86	39.89	40.02	40.23	19-5⅜	19-4	19-9⅛	19-10⅛	3-1⅞
NW2	40.74	40.74	40.99	40.93	40.91	40.93	21-2¼	21-2¼	21-2¼	21-2¼	3-5¼
NW3	42.48	41.62	42.64	42.62	42.19	42.00	22-10⅛	22-7⅞	22-3⅜	22-0⅛	4-2⅛

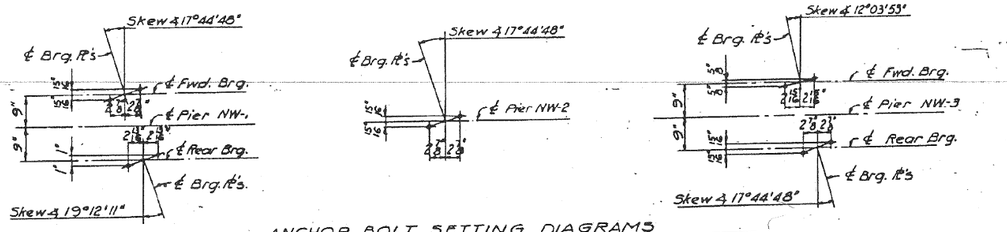

ANCHOR BOLT SETTING DIAGRAMS

NOTE:
For additional pier sections and notes see sheet No. 530

CITY OF CHICAGO
DEPARTMENT OF PUBLIC WORKS
BUREAU OF ENGINEERING

SOUTHWEST ROUTE SUPERHIGHWAY
ELEVATED HIGHWAY
S. LAKE PARK AVE. TO S. LAKE SHORE DRIVE
SECTION SW-1818.3-2H

PIERS NW1, NW2, NW3

SCALE: AS NOTED DEC. 1964
SHEET NO. 5-23 OF 99 SHEETS

DESIGNED BY A.V.A
DRAWN BY B.B. 8-18-65
CHECKED BY A.V.A
APPROVED BY K.A.

225-60L70_As-Builts.dgn

AECOM

USER NAME = auyeungh	DESIGNED -	REVISED -
	CHECKED -	REVISED -
PLOT SCALE =	DRAWN - HAY	REVISED -
PLOT DATE = 11/11/2014	CHECKED - ATB	REVISED -

STATE OF ILLINOIS
DEPARTMENT OF TRANSPORTATION

AS-BUILTS
SHEET NO. 62 OF 174 SHEETS

F.A.I. RTE.	SECTION	COUNTY	TOTAL SHEETS	SHEET NO.
55	2010-080-B	COOK	886	379
		CONTRACT NO. 60L70		
	ILLINOIS	FED. AID PROJECT		

FOR INFORMATION ONLY

ROUTE NO.	SECTION	COUNTY	TOTAL SHEETS	SHEET NO.
F. A. I.—55	SW-1818.3-2N	COOK	99	45
FED. ROAD DIV. NO. 4	ILLINOIS	PROJECT I.G.—55-7(58)-588		

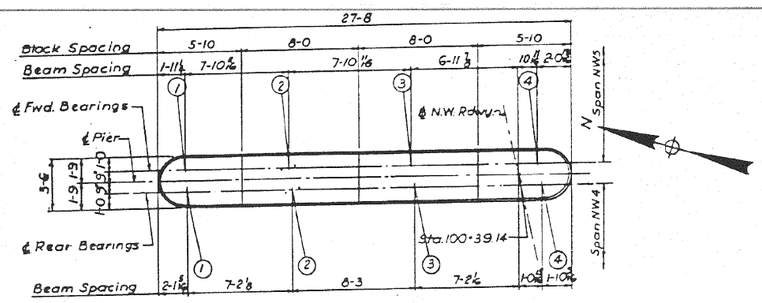

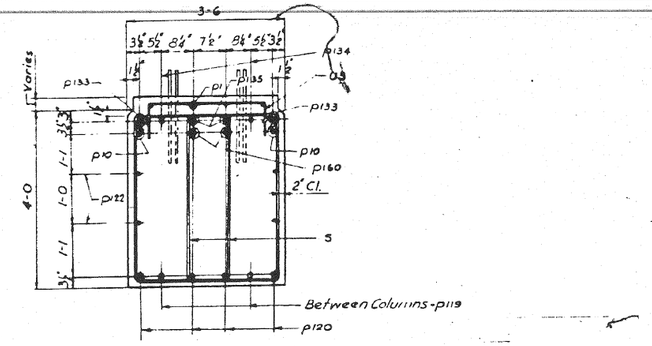

SECTION A-A
Scale: ½"=1'-0"

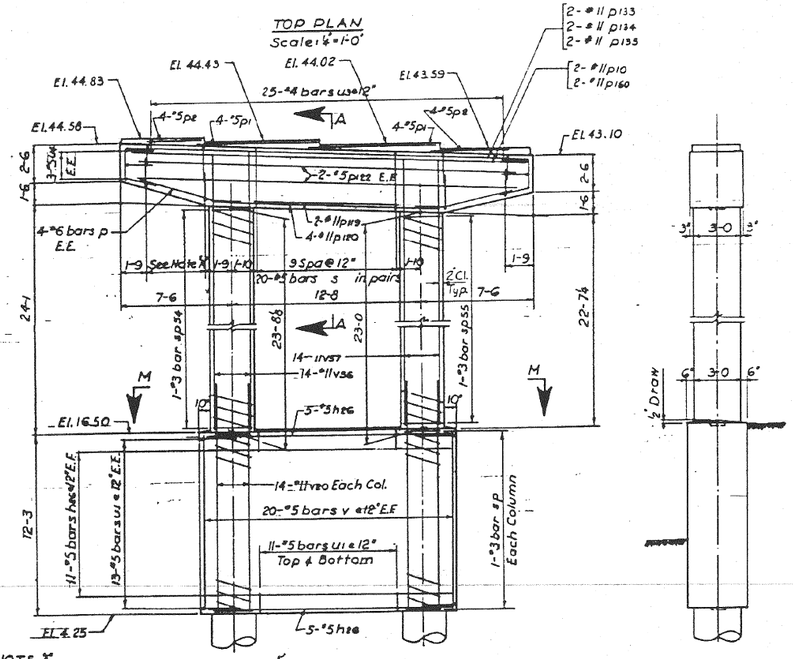

ELEVATION
Scale: ½"=1'-0"

END VIEW
Scale: ½"=1'-0"

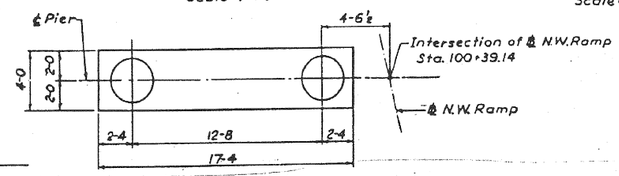

PLAN M-M
Scale: ½"=1'-0"

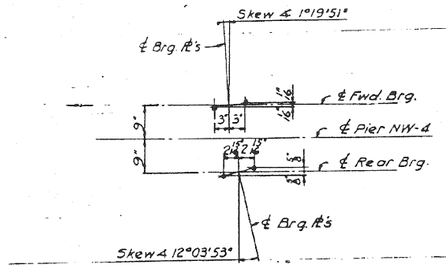

ANCHOR BOLT SETTING DIAGRAM

BILL OF MATERIAL

DESCRIPTION	UNIT	QUANTITY
Class 'X' Concrete	Cu.Yds.	58.0
Reinforcement Bars	Lbs.	10,890
Class A Excavation for Structures	Cu.Yds.	11

NOTE:
For additional pier sections and notes see sheet No. 5-30

DESIGNED BY A.J.A.
DRAWN BY B.B. 4-10-63
CHECKED BY A.J.A.
APPROVED BY K.A.

CITY OF CHICAGO
DEPARTMENT OF PUBLIC WORKS
BUREAU OF ENGINEERING

SOUTHWEST ROUTE SUPERHIGHWAY
ELEVATED HIGHWAY
S. LAKE PARK AVE. TO S. LAKE SHORE DRIVE

SECTION SW-1818.3-2N

PIER NW4

SCALE: AS NOTED DEC. 1964
SHEET NO. 5-24 OF 99 SHEETS

226-60L70_As-Builts.dgn

AECOM	USER NAME = auyeungh	DESIGNED -	REVISED -	STATE OF ILLINOIS DEPARTMENT OF TRANSPORTATION	AS-BUILTS
		CHECKED -	REVISED -		SHEET NO. 63 OF 174 SHEETS
	PLOT SCALE =	DRAWN - HAY	REVISED -		
	PLOT DATE = 11/11/2014	CHECKED - ATB	REVISED -		

F.A.I. RTE.	SECTION	COUNTY	TOTAL SHEETS	SHEET NO.
55	2010-080-B	COOK	886	380
		CONTRACT NO. 60L70		
	ILLINOIS FED. AID PROJECT			

FOR INFORMATION ONLY

ROUTE NO.	SECTION	COUNTY	TOTAL SHEETS	SHEET NO.
F.A.I.-90	SW-1818.3-2H	COOK	99	46
FED. ROAD DIV. NO. 4	ILLINOIS	PROJECT I.C.-90-7(286)-289		

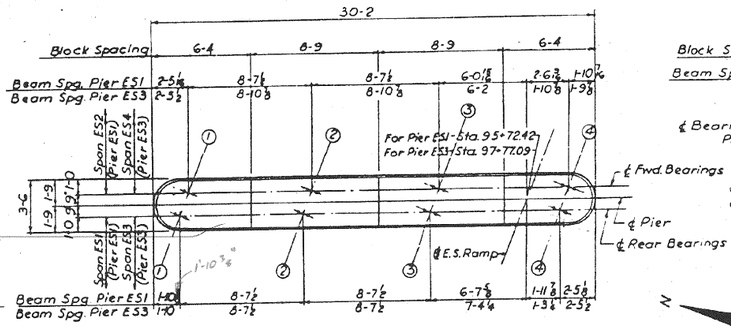

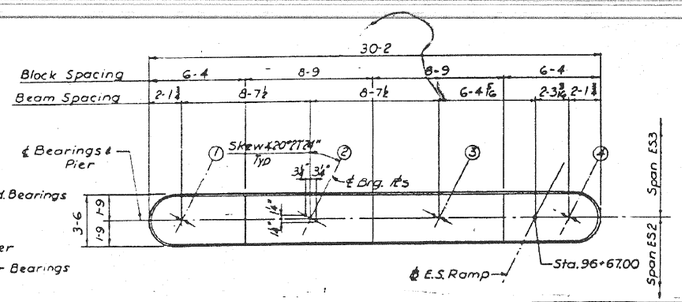

TOP PLAN For PIER ES2
Scale: ¼"-1'-0"

BILL OF MATERIAL

DESCRCIPTION	UNIT	QUANTITY		
		Pier ES1	Pier ES2	Pier ES3
Class "X" Concrete	Cu. Yds.	58.2	57.1	57.2
Reinforcement Bars	Lbs.	8,740	11,080	11,030
Class A Excavation for Structures	Cu. Yds.	12	14	13

PIER	EL. A	EL. B	Top of Block Elevation — Beam No. 1	2	3	4	DIMENSIONS A	B	C	D	E
ES1	34.76	34.17	35.02	34.81	34.64	34.51	11-11¼	11-9½	11-6	11-4½	3-1
ES2	35.04	34.47	35.30	35.10	34.93	34.81	13-9½	13-7⅞	13-4⅝	13-2⅜	3-1⅝
ES3	34.99	33.84	35.27	34.92	34.59	34.28	13-8⅞	13-5⅜	12-10½	12-7⅛	3-9¼

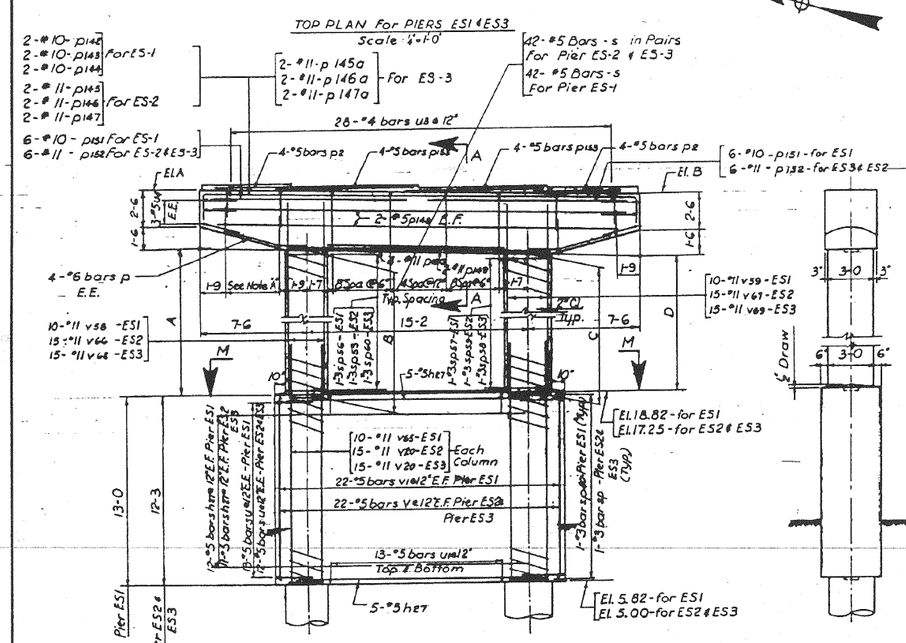

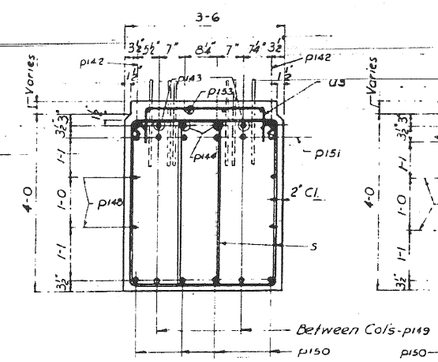

SECTION A-A FOR PIER ES-1
Scale: ¾"-1'-0"

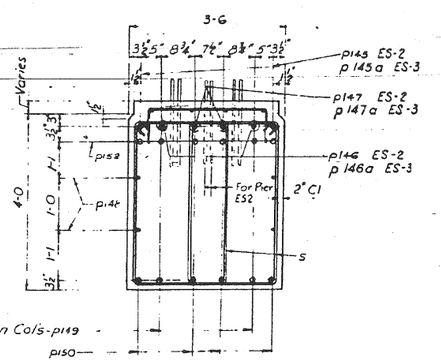

SECTION A-A FOR PIERS ES2 & ES3
Scale: ¾"-1'-0"

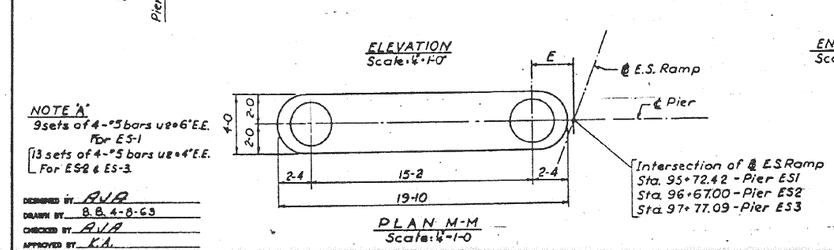

NOTE 'A'
9 sets of 4-#5 bars u8 @ 6" E.E. For ES-1
13 sets of 4-#5 bars u8 @ 4" E.E. For ES2 & ES-3

DESIGNED BY R.V.A.
DRAWN BY B.B. 4-8-63
CHECKED BY R.V.A.
APPROVED BY K.A.

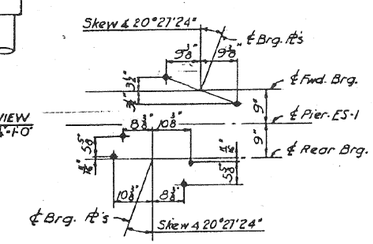

END VIEW
Scale: ¼"-1'-0"

ANCHOR BOLT SETTING DIAGRAM
Typ. Pier ES-1

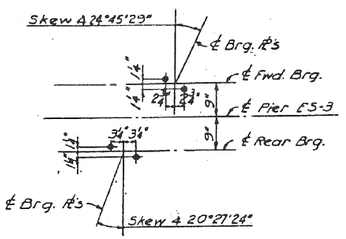

ANCHOR BOLT SETTING DIAGRAM
Typ. Pier ES-3

NOTE:
For additional pier sections and notes see sheet No. S-30

CITY OF CHICAGO
DEPARTMENT OF PUBLIC WORKS
BUREAU OF ENGINEERING

SOUTHWEST ROUTE SUPERHIGHWAY
ELEVATED HIGHWAY
S. LAKE PARK AVE. TO S. LAKE SHORE DRIVE
SECTION SW-1818.3-2H

PIERS ES1, ES2 & ES3

SCALE: AS NOTED DEC. 1964
SHEET NO. S-25 OF 99 SHEETS

AECOM

USER NAME = auyeungh	DESIGNED -	REVISED -
	CHECKED -	REVISED -
PLOT SCALE =	DRAWN - HAY	REVISED -
PLOT DATE = 11/11/2014	CHECKED - ATB	REVISED -

STATE OF ILLINOIS
DEPARTMENT OF TRANSPORTATION

AS-BUILTS
SHEET NO. 64 OF 174 SHEETS

F.A.I. RTE.	SECTION	COUNTY	TOTAL SHEETS	SHEET NO.
55	2010-080-B	COOK	886	381
		CONTRACT NO. 60L70		
	ILLINOIS FED. AID PROJECT			

227-60L70_As-Builts.dgn

FOR INFORMATION ONLY

ROUTE NO.	SECTION	COUNTY	TOTAL SHEETS	SHEET NO.
F. A. I.—55	SW-1818.3-2H	COOK	99	47
FED. ROAD DIV. NO. 4	ILLINOIS	PROJECT I.G.-55-7(98)-288		

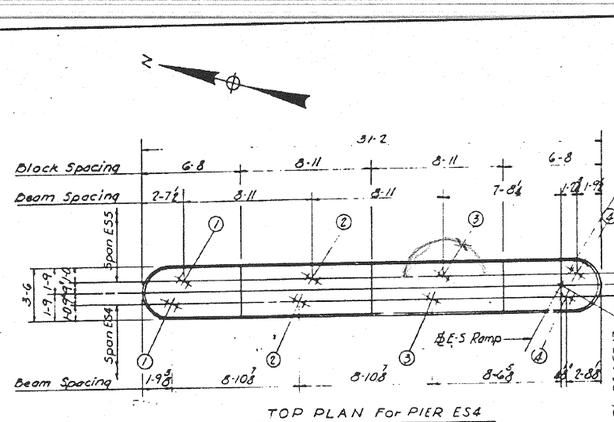

TOP PLAN For PIER ES4
Scale ¼"=1'-0"

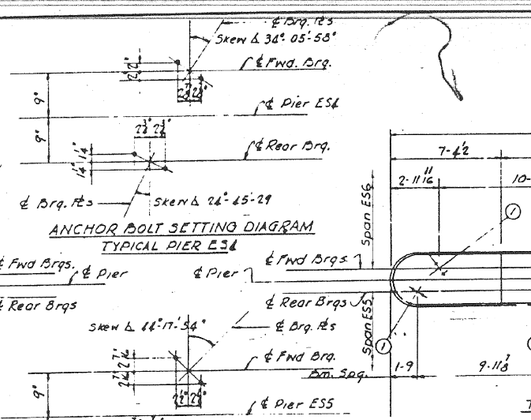

ANCHOR BOLT SETTING DIAGRAM
TYPICAL PIER ES4

ANCHOR BOLT SETTING DIAGRAM
TYPICAL PIER ES5

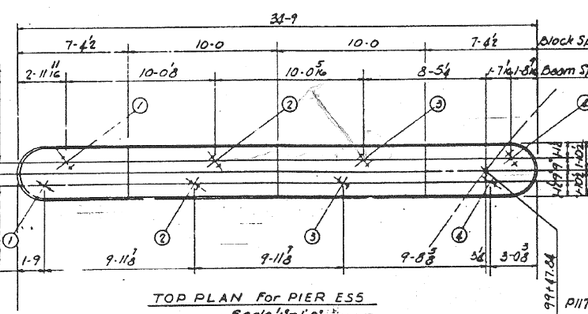

TOP PLAN For PIER ES5
Scale ¼"=1'-0"

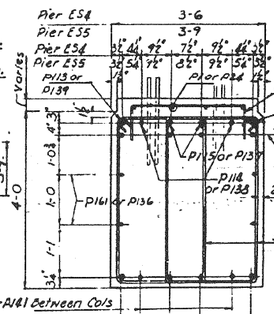

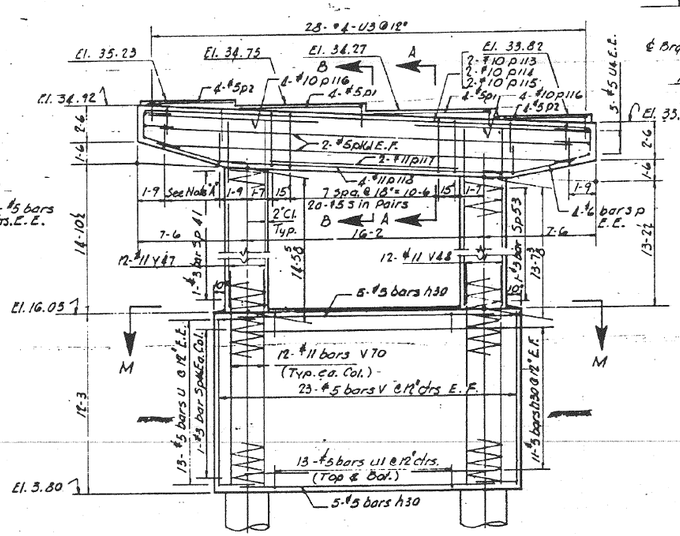

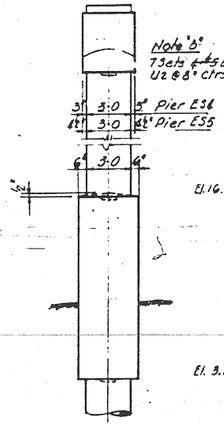

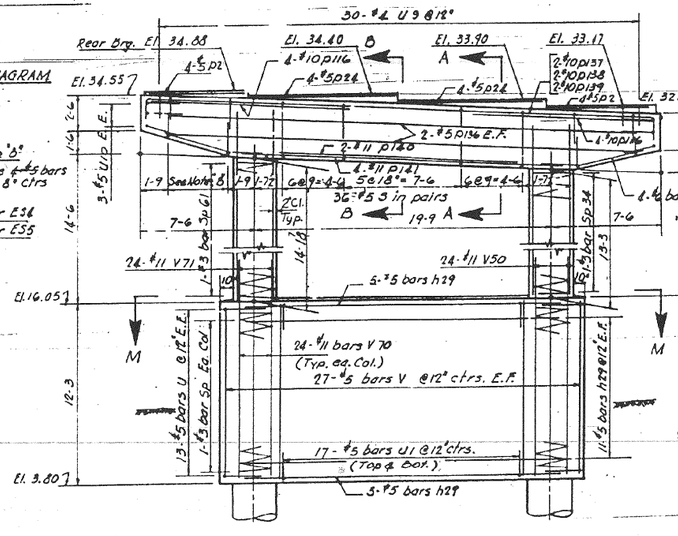

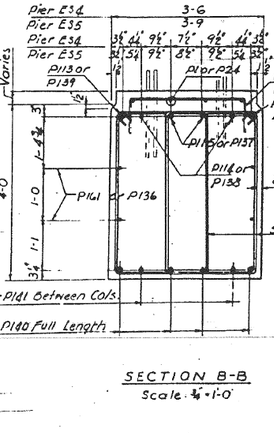

SECTION A-A
Scale ¾"=1'-0"

SECTION B-B
Scale ¾"=1'-0"

ELEVATION
Scale ¼"=1'-0"

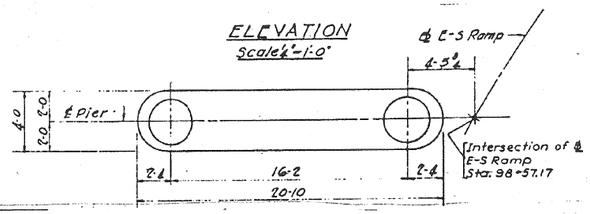

PLAN M-M
Scale ¼"=1'-0"

END VIEW
Scale ¼"=1'-0"

BILL OF MATERIAL

DESCRIPTION	UNIT	QUANTITY	
		Pier ES4	Pier ES5
Class X Concrete	C.Y.	60.3	70.0
Reinforcement Bars	Lbs.	9,150	13,860
Class 'A' Excavation for Structures	C.Y.	15	15

ELEVATION
Scale ¼"=1'-0"

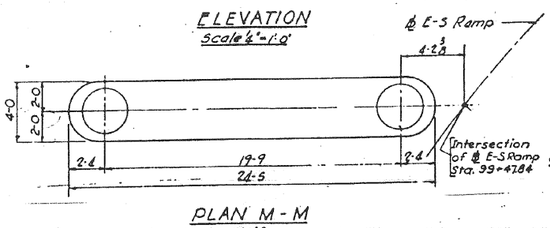

PLAN M-M
Scale ¼"=1'-0"

Note:
For additional Pier Sections & Notes Sheet No. 3-30

DESIGNED BY A.J.A.
DRAWN BY A.S.
CHECKED BY A.J.A.
APPROVED BY K.A.

CITY OF CHICAGO
DEPARTMENT OF PUBLIC WORKS
BUREAU OF ENGINEERING

SOUTHWEST ROUTE SUPERHIGHWAY
ELEVATED HIGHWAY
S. LAKE PARK AVE. TO S. LAKE SHORE DRIVE
SECTION SW-1818.3-2H

PIERS ES4 & ES5

SCALE: AS NOTED DEC. 1964
SHEET NO. 5-2G OF 99 SHEETS

228-60L70_As-Builts.dgn

AECOM	USER NAME = auyeungh	DESIGNED -	REVISED -
		CHECKED -	REVISED -
	PLOT SCALE =	DRAWN - HAY	REVISED -
	PLOT DATE = 11/11/2014	CHECKED - ATB	REVISED -

STATE OF ILLINOIS
DEPARTMENT OF TRANSPORTATION

AS-BUILTS

SHEET NO. 65 OF 174 SHEETS

F.A.I. RTE.	SECTION	COUNTY	TOTAL SHEETS	SHEET NO.
55	2010-080-B	COOK	886	382
		CONTRACT NO. 60L70		
		ILLINOIS	FED. AID PROJECT	

FOR INFORMATION ONLY

ROUTE-NO.	SECTION	COUNTY	TOTAL SHEETS	SHEET NO.
F. A. L-55	SW-1818.3-2H	COOK	99	48
FED. ROAD DIV. NO. 4	ILLINOIS	PROJECT I.G.-55-7(09)-289		

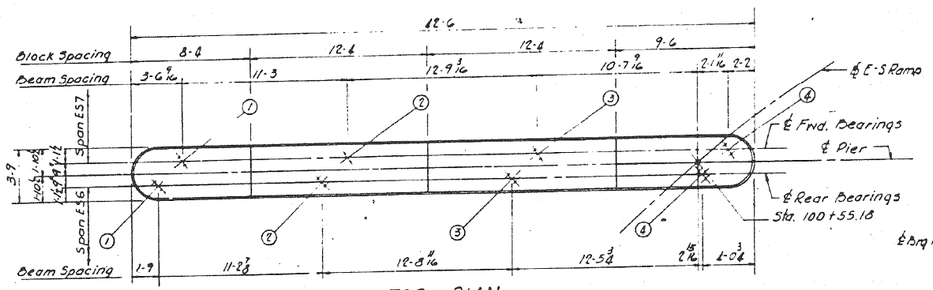

TOP PLAN
Scale ¼"=1'-0

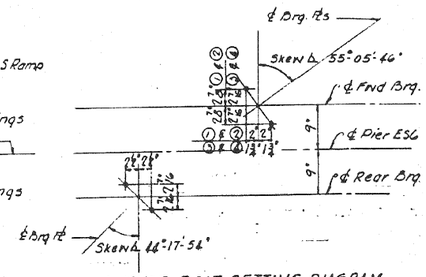

ANCHOR BOLT SETTING DIAGRAM
(Typ. Pier ES6 except as noted)

PIER ES6

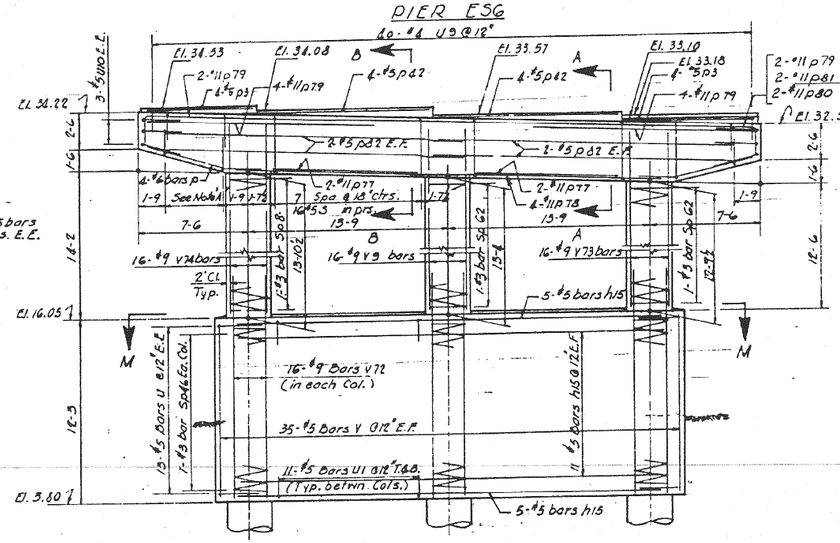

ELEVATION
Scale ¼"=1'-0

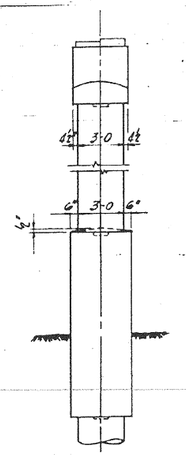

END VIEW
Scale ½"=1'-0

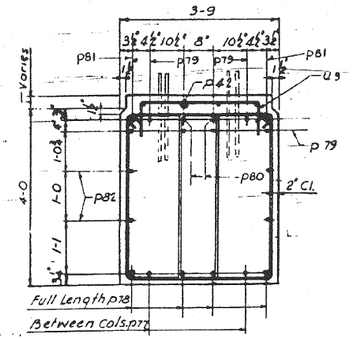

SECTION A-A
Scale ¾"=1'-0"

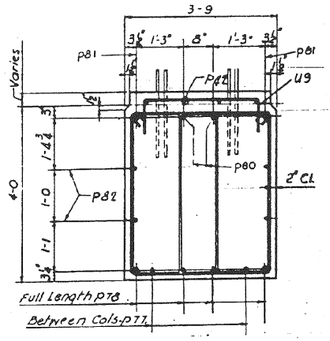

SECTION B-B
Scale ¾"=1'-0"

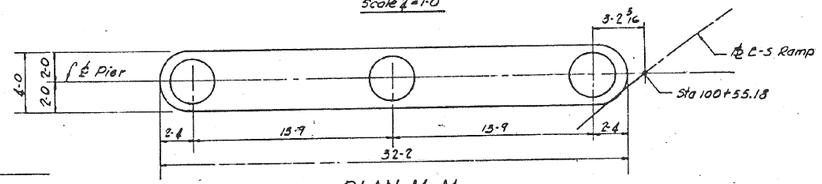

PLAN M-M
Scale ¼"=1'-0

Note
For additional Pier Sections & notes see Sheet 530.

BILL OF MATERIAL

DESCRIPTION	UNIT	QUANTITY
Class X Concrete	Cu. Yds.	92.1
Reinforcement Bars	Lbs.	18,230
Class 'A' Excavation for Structures	Cu. Yds.	24

DESIGNED BY A.J.A
DRAWN BY A.S.
CHECKED BY A.J.A
APPROVED BY K.A

CITY OF CHICAGO
DEPARTMENT OF PUBLIC WORKS
BUREAU OF ENGINEERING

SOUTHWEST ROUTE SUPERHIGHWAY
ELEVATED HIGHWAY
S. LAKE PARK AVE. TO S. LAKE SHORE DRIVE
SECTION SW-1818.3-2H

PIER ES6

SCALE: AS NOTED DEC. 1964
SHEET NO. S-27 OF 99 SHEETS

229-60L70_As-Builts.dgn

AECOM

USER NAME = auyeungh	DESIGNED -	REVISED -	
	CHECKED -	REVISED -	
PLOT SCALE =	DRAWN - HAY	REVISED -	
PLOT DATE = 11/11/2014	CHECKED - ATB	REVISED -	

STATE OF ILLINOIS
DEPARTMENT OF TRANSPORTATION

AS-BUILTS
SHEET NO. 66 OF 174 SHEETS

F.A.I. RTE.	SECTION	COUNTY	TOTAL SHEETS	SHEET NO.
55	2010-080-B	COOK	886	383
		CONTRACT NO. 60L70		
	ILLINOIS FED. AID PROJECT			

FOR INFORMATION ONLY

ROUTE NO.	SECTION	COUNTY	TOTAL SHEETS	SHEET NO.
F. A. I. - 55	SW-1618.3-2H	COOK	99	49
FED. ROAD DIV. NO. 4	ILLINOIS	PROJECT I.G.-55-7(38)-288		

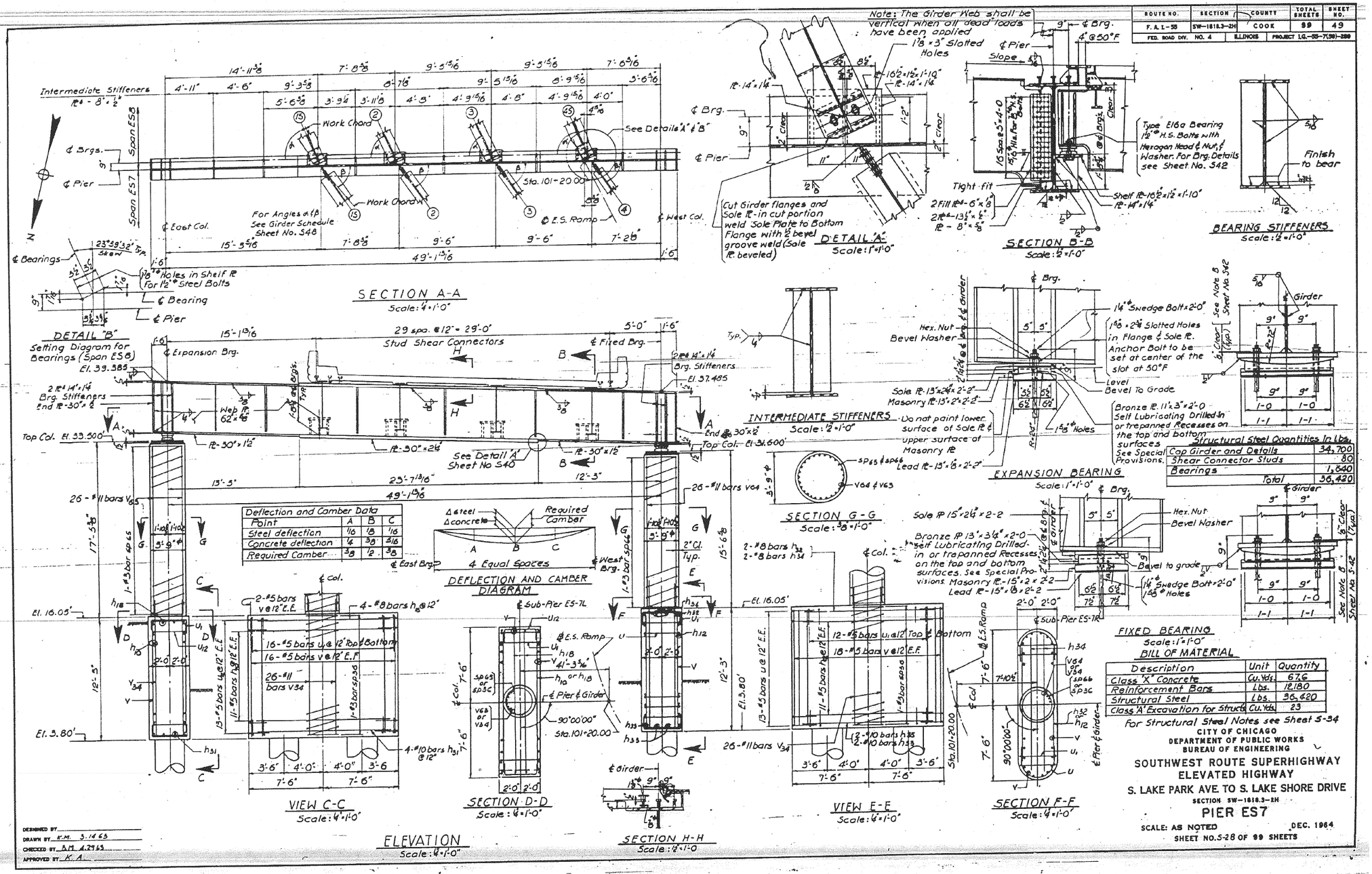

AECOM	USER NAME = auyeungh	DESIGNED -	REVISED -	STATE OF ILLINOIS DEPARTMENT OF TRANSPORTATION	AS-BUILTS
		CHECKED -	REVISED -		SHEET NO. 67 OF 174 SHEETS
	PLOT SCALE =	DRAWN - HAY	REVISED -		
	PLOT DATE = 11/11/2014	CHECKED - ATB	REVISED -		

F.A.I. RTE.	SECTION	COUNTY	TOTAL SHEETS	SHEET NO.
55	2010-080-B	COOK	886	384
		CONTRACT NO. 60L70		
		ILLINOIS FED. AID PROJECT		

230-60L70_As-Builts.dgn

FOR INFORMATION ONLY

ROUTE NO.	SECTION	COUNTY	TOTAL SHEETS	SHEET NO.
F.A.I.—55	SW-1818.3-2H	COOK	99	50
FED. ROAD DIV. NO. 4	ILLINOIS	PROJECT I.Q.-88-7(58)-288		

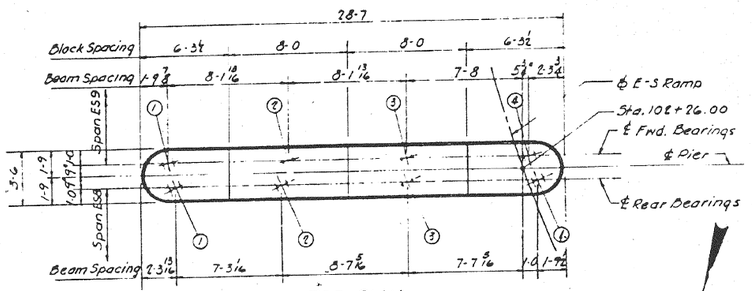

TOP PLAN
Scale 1/4"=1'-0"

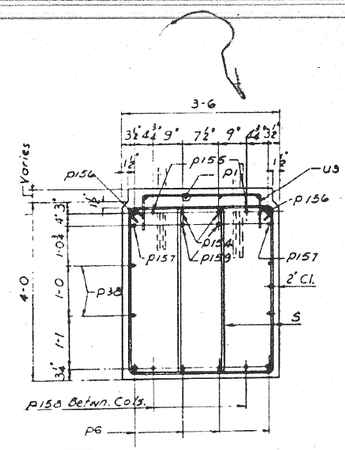

SECTION A-A
Scale 1/2"=1'-0"

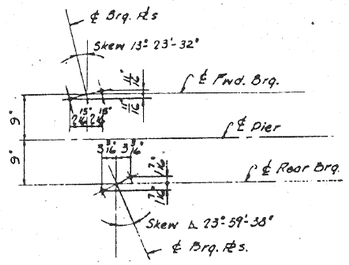

ANCHOR BOLT SETTING DIAGRAM
(Typ. for Pier ES8)

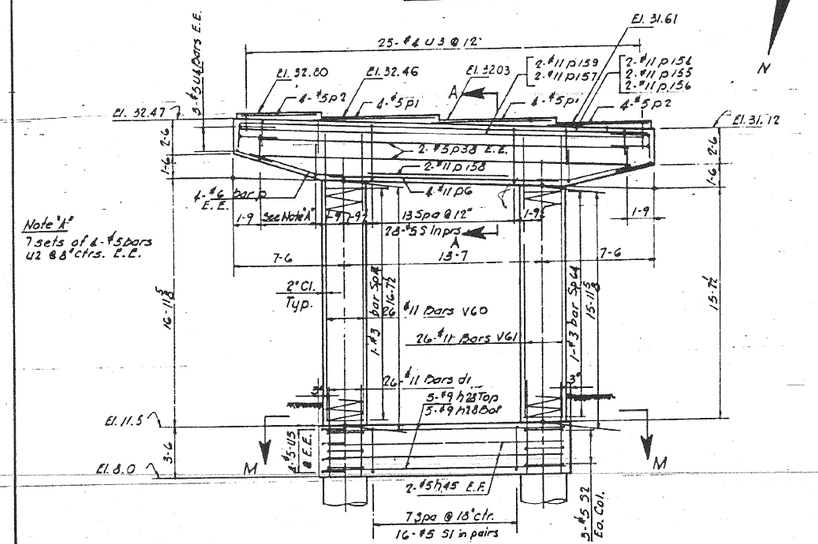

ELEVATION
Scale 1/2"=1'-0"

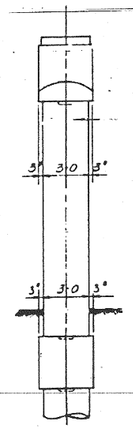

END VIEW
Scale 1/2"=1'-0"

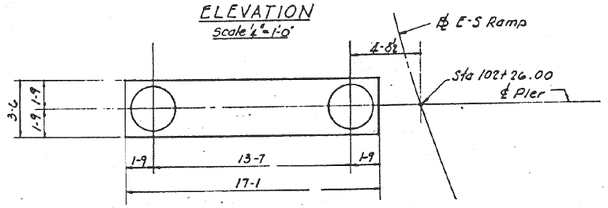

PLAN M-M
Scale 1/4"=1'-0"

Note
For additional Pier Sections & Notes
see Sheet No. S30.

DESIGNED BY A.J.A
DRAWN BY A.S.
CHECKED BY A.J.A
APPROVED BY K.A.

BILL OF MATERIAL

DESCRIPTION	UNIT	QUANTITY
Class X Concrete	Cu. Yds	32.5
Reinforcement Bars	Lbs.	11,640
Class 'A' Excavation for Structures	Cu. Yds.	11

CITY OF CHICAGO
DEPARTMENT OF PUBLIC WORKS
BUREAU OF ENGINEERING

SOUTHWEST ROUTE SUPERHIGHWAY
ELEVATED HIGHWAY
S. LAKE PARK AVE. TO S. LAKE SHORE DRIVE
SECTION SW-1818.3-2H

PIER ES8

SCALE: AS NOTED DEC. 1964
SHEET NO. S-29 OF 99 SHEETS

231-60L70_As-Builts.dgn

AECOM

USER NAME = auyeungh	DESIGNED -	REVISED -
	CHECKED -	REVISED -
PLOT SCALE =	DRAWN - HAY	REVISED -
PLOT DATE = 11/11/2014	CHECKED - ATB	REVISED -

STATE OF ILLINOIS
DEPARTMENT OF TRANSPORTATION

AS-BUILTS
SHEET NO. 68 OF 174 SHEETS

F.A.I. RTE.	SECTION	COUNTY	TOTAL SHEETS	SHEET NO.
55	2010-080-B	COOK	886	385
		CONTRACT NO. 60L70		
		ILLINOIS FED. AID PROJECT		

FOR INFORMATION ONLY

ROUTE NO.	SECTION	COUNTY	TOTAL SHEETS	SHEET NO.
F.A.I.-55	SW-1818.3-2H	COOK	99	51
FED. ROAD DIV. NO. 4	ILLINOIS	PROJECT I.C.-55-7(39)-288		

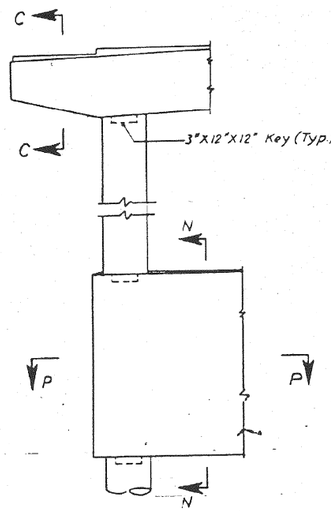

PARTIAL ELEVATION OF PIER

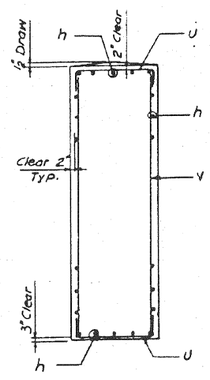

SECTION N-N
TYPICAL CRASHWALL REINFORCEMENT

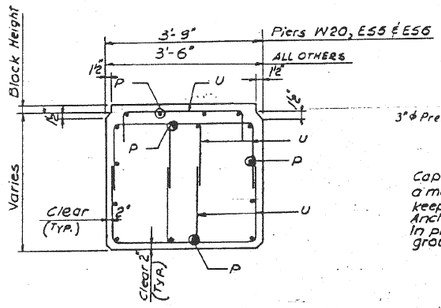

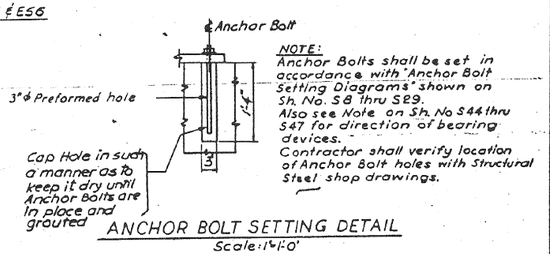

ANCHOR BOLT SETTING DETAIL
Scale: 1"=1'-0"

SECTION C-C
TYPICAL CANTILEVER REINFORCEMENT

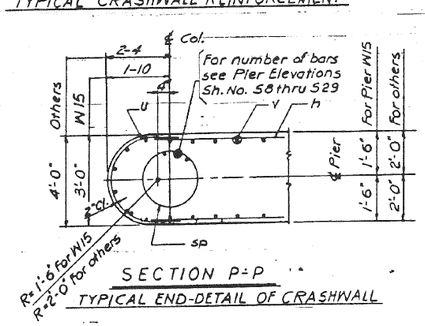

SECTION P-P
TYPICAL END-DETAIL OF CRASHWALL

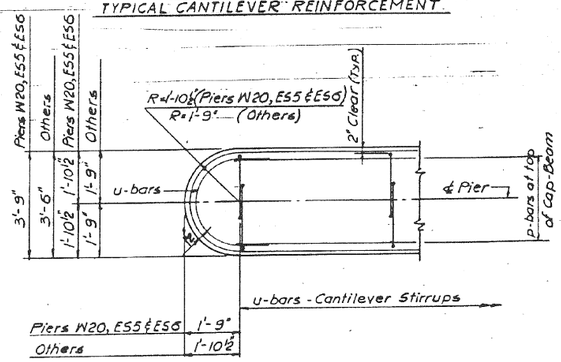

TYPICAL END DETAIL OF PIER CAP

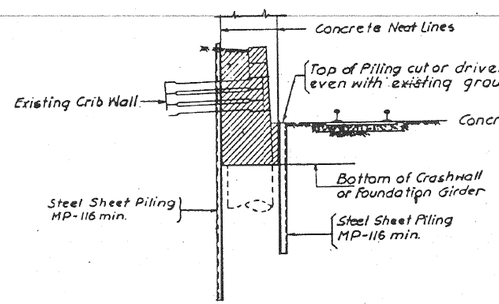

NOTE:
For additional Steel Sheet Piling details see Sh. S-4

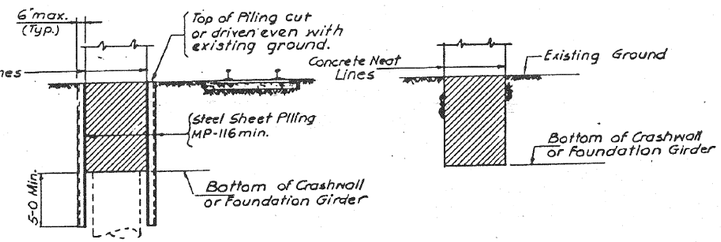

PAY LIMITS
For Class "A" Excavation for Structures

Note:
For Location of Steel Sheet Piling see Sheet No. 52, 53 & 54

Notes:
1. Bearing Blocks to be poured monolithic with Pier Cap.
2. Adjust Stirrup spacing to avoid interference with Anchor Bolt Forms.
3. For reinforcement bar lists see Sheets S-31 thru S-33 inclusive.
4. Use 20 bar diameters as minimum Lap for reinforcement unless otherwise shown or noted.
5. E.E. indicates Each End
6. E.F. indicates Each Face
7. All corners shall be chamfered ¾" unless otherwise shown or noted

DESIGNED BY H.N.
DRAWN BY K.M. 3.20.68
CHECKED BY A.J.A.
APPROVED BY K.A.

CITY OF CHICAGO
DEPARTMENT OF PUBLIC WORKS
BUREAU OF ENGINEERING

SOUTHWEST ROUTE SUPERHIGHWAY
ELEVATED HIGHWAY
S. LAKE PARK AVE. TO S. LAKE SHORE DRIVE
SECTION SW-1818.3-2H

COMMON PIER DETAILS
SCALE: AS NOTED DEC. 1964
SHEET NO. S-30 OF 99 SHEETS

232-60L70_As-Builts.dgn

AECOM

USER NAME = auyeungh	DESIGNED -	REVISED -
	CHECKED -	REVISED -
PLOT SCALE =	DRAWN - HAY	REVISED -
PLOT DATE = 11/11/2014	CHECKED - ATB	REVISED -

STATE OF ILLINOIS
DEPARTMENT OF TRANSPORTATION

AS-BUILTS
SHEET NO. 69 OF 174 SHEETS

F.A.I. RTE.	SECTION	COUNTY	TOTAL SHEETS	SHEET NO.
55	2010-080-B	COOK	886	386
			CONTRACT NO. 60L70	
	ILLINOIS	FED. AID PROJECT		

FOR INFORMATION ONLY

ROUTE NO.	SECTION	COUNTY	TOTAL SHEETS	SHEET NO.
F. A. I.-55	SW-1818.3-2N	COOK	99	55
FED. ROAD DIV. NO. 4	ILLINOIS	PROJECT I.G.-55-7(39)-889		

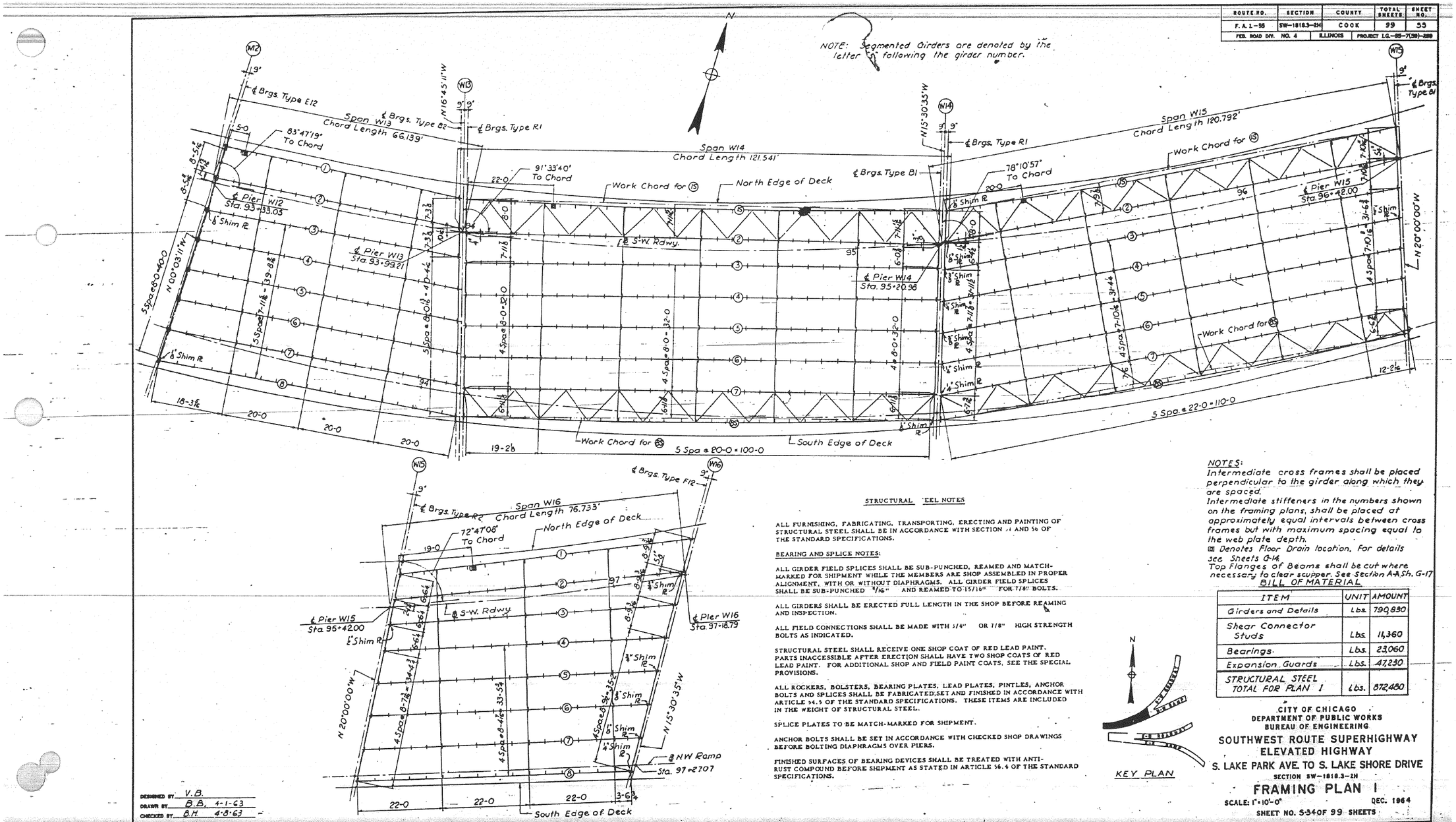
NOTE: Segmented Girders are denoted by the letter following the girder number.
N
M2
W13
W14
W15
W16
Span W13
Chord Length 66.139'
Span W14
Chord Length 121.541'
Span W15
Chord Length 120.792'
Span W16
Chord Length 76.733'
℄ Brgs. Type E12
℄ Brgs. Type E2
℄ Brgs. Type R1
℄ Brgs. Type B1
℄ Brgs. Type F12
℄ Brgs. Type R2
N 16°45'11"W
N 15°30'35"W
N 20°00'00"W
N 00°03'11"W
83°47'19" To Chord
91°33'40" To Chord
78°10'57" To Chord
72°47'08" To Chord
Work Chord for 15
Work Chord for 25
North Edge of Deck
South Edge of Deck
℄ S.W. Rdwy.
℄ NW Ramp
℄ Pier W12 Sta. 93+33.05
℄ Pier W13 Sta. 93+99.21
℄ Pier W14 Sta. 95+20.98
℄ Pier W15 Sta. 96+42.00
℄ Pier W15 Sta. 95+42.00
℄ Pier W16 Sta. 97+18.79
Sta. 97+27.07
1" Shim R
3/4" Shim R
5 Spa. @ 80'-0" = 400'-0"
5 Spa. @ 22'-0" = 110'-0"
5 Spa. @ 20'-0" = 100'-0"
4 Spa. @ 8'-0" = 32'-0"
4 Spa. @ 8'-7 3/4" = 33'-3"
4 Spa. @ 8'-7 1/8" = 34'-4 1/2"
4 Spa. @ 7'-10 1/8" = 31'-4 1/2"
4 Spa. @ 7'-10 1/8" = 31'-6"
3 Spa. @ 7'-11 1/8" = 23'-9"
3 Spa. @ 7'-3 3/8" = 21'-10"
4 Spa. @ 8'-7 3/8" = 34'-3"
4 Spa. @ 8'-7 3/4" = 34'-3"
4 Spa. @ 8'-7 3/4" = 34'-3 1/2"
4 Spa. @ 8'-7 3/8" = 34'-3"
4 Spa. @ 8'-7 3/4" = 34'-3"
4 Spa. @ 8'-7 3/4" = 34'-3"
4 Spa. @ 8'-7 3/4

FOR INFORMATION ONLY

ROUTE NO.	SECTION	COUNTY	TOTAL SHEETS	SHEET NO.
F. A. I.—55	SW-1818.3-2H	COOK	99	56
FED. ROAD DIV. NO. 4	ILLINOIS	PROJECT I.Q.—88—7(39)—288		

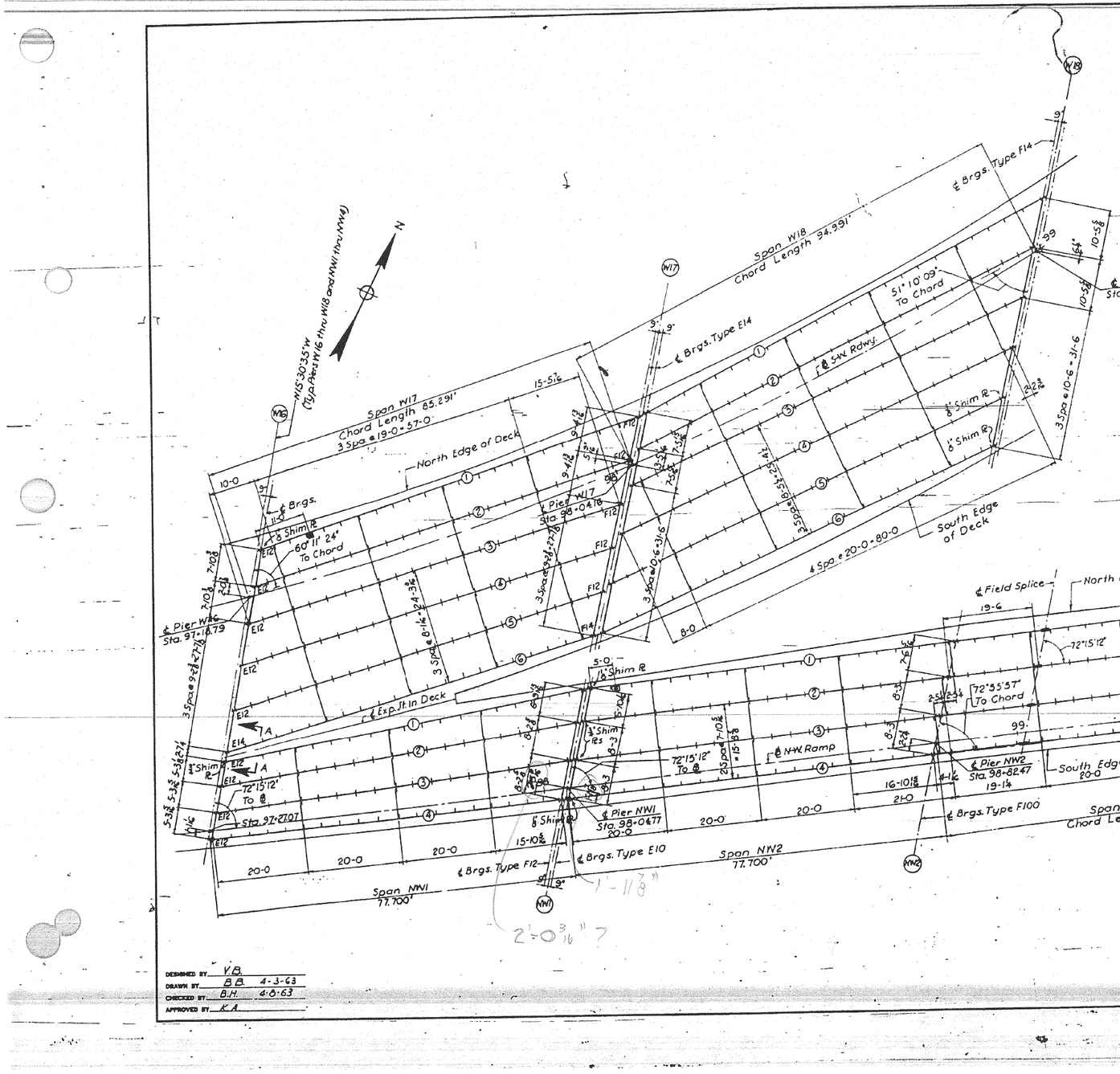

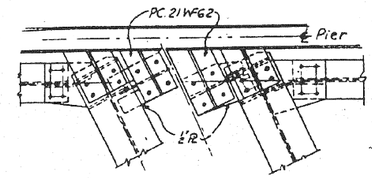

NOTES:
Intermediate cross frames shall be placed perpendicular to the girder along which they are spaced.
Intermediate stiffeners, in the numbers shown on the Framing Plan, shall be placed at approximately equal intervals between cross frames but with maximum spacing equal to the web plate depth.
⊠ Denotes Floor Drain location. For details see Sheet G-14
Top Flanges of Beams shall be cut where necessary to clear scupper. See section A-A on Sheet G-17

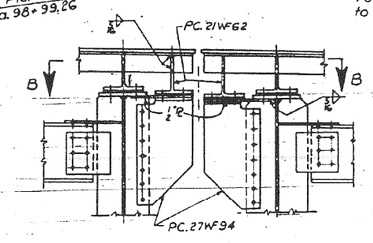

BILL OF MATERIAL

ITEM	UNIT	AMOUNT
Girders and Details	Lbs.	393,410
Stud Shear Connectors	Lbs.	5,780
Bearings	Lbs.	11,920
Expansion Guards	Lbs.	32,940
STRUCTURAL STEEL TOTAL FOR PLAN 2	Lbs.	450,050

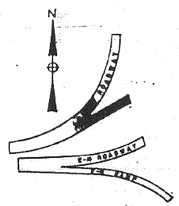

CITY OF CHICAGO
DEPARTMENT OF PUBLIC WORKS
BUREAU OF ENGINEERING

SOUTHWEST ROUTE SUPERHIGHWAY
ELEVATED HIGHWAY
S. LAKE PARK AVE. TO S. LAKE SHORE DRIVE
SECTION SW-1818.3-2H

FRAMING PLAN 2

SCALE: 1"=10'-0" DEC. 1964
SHEET NO. 5-35 OF 99 SHEETS

DESIGNED BY V.B.
DRAWN BY B.B. 4-3-63
CHECKED BY B.H. 4-8-63
APPROVED BY K.A.

234-60L70_As-Builts.dgn

AECOM

USER NAME = auyeungh	DESIGNED -	REVISED -
	CHECKED -	REVISED -
PLOT SCALE =	DRAWN - HAY	REVISED -
PLOT DATE = 11/11/2014	CHECKED - ATB	REVISED -

STATE OF ILLINOIS
DEPARTMENT OF TRANSPORTATION

AS-BUILTS

SHEET NO. 71 OF 174 SHEETS

F.A.I. RTE.	SECTION	COUNTY	TOTAL SHEETS	SHEET NO.
55	2010-080-B	COOK	886	388
		CONTRACT NO. 60L70		
		ILLINOIS	FED. AID PROJECT	

FOR INFORMATION ONLY

ROUTE NO.	SECTION	COUNTY	TOTAL SHEETS	SHEET NO.
F. A. I.—55	SW-1818.3-2H	COOK	99	57
FED. ROAD DIV. NO. 4	ILLINOIS	PROJECT I.Q.-55-7(59)-289		

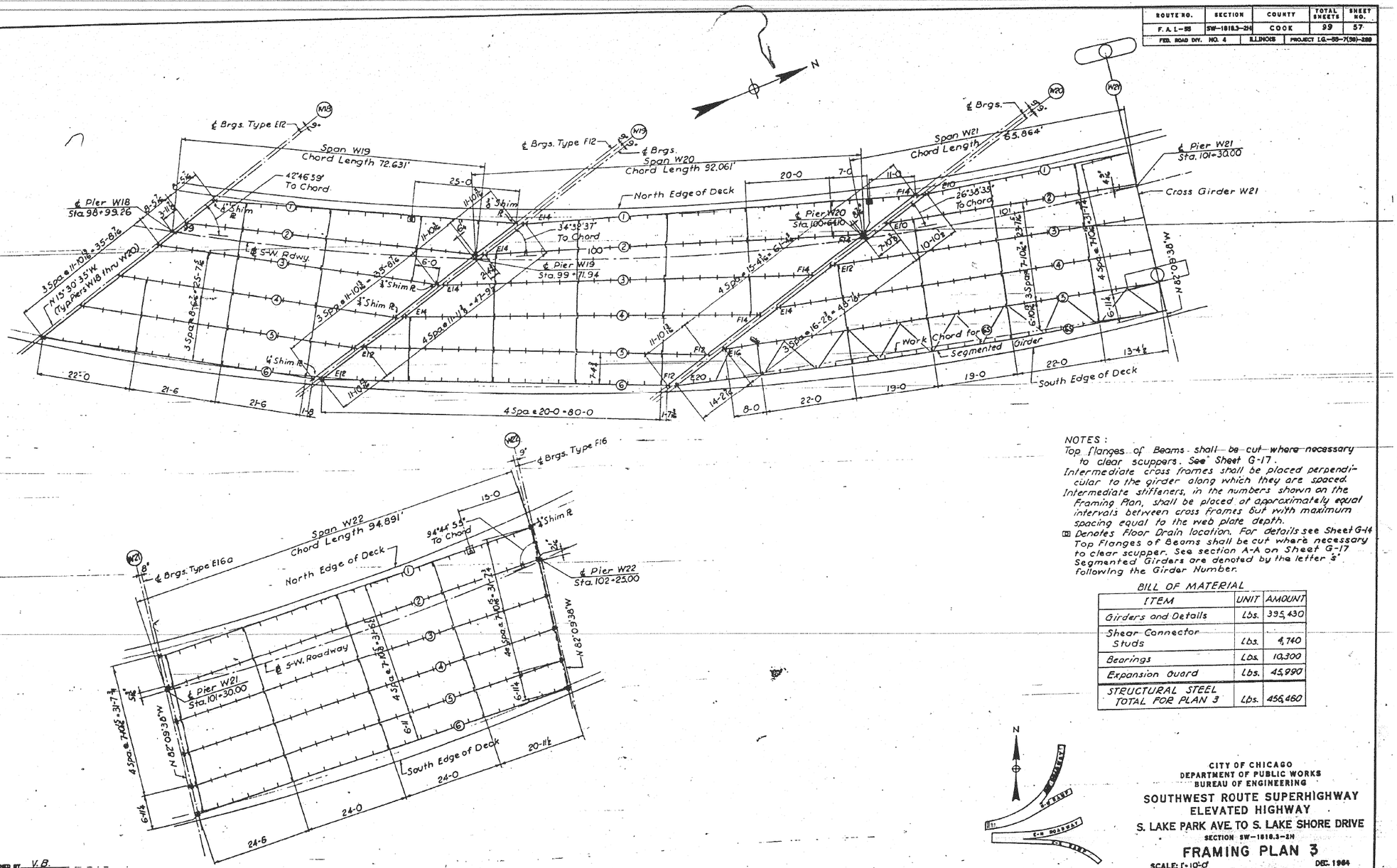

NOTES :

Top flanges of Beams shall be cut where necessary to clear scuppers. See Sheet G-17.

Intermediate cross frames shall be placed perpendicular to the girder along which they are spaced.

Intermediate stiffeners, in the numbers shown on the Framing Plan, shall be placed at approximately equal intervals between cross frames but with maximum spacing equal to the web plate depth.

⊞ Denotes Floor Drain location. For details see Sheet G-14

Top Flanges of Beams shall be cut where necessary to clear scupper. See section A-A on Sheet G-17

Segmented Girders are denoted by the letter 'S' following the Girder Number.

BILL OF MATERIAL

ITEM	UNIT	AMOUNT
Girders and Details	Lbs.	395,430
Shear Connector Studs	Lbs.	4,740
Bearings	Lbs.	10,300
Expansion Guard	Lbs.	45,990
STRUCTURAL STEEL TOTAL FOR PLAN 3	Lbs.	456,460

CITY OF CHICAGO
DEPARTMENT OF PUBLIC WORKS
BUREAU OF ENGINEERING

SOUTHWEST ROUTE SUPERHIGHWAY
ELEVATED HIGHWAY
S. LAKE PARK AVE. TO S. LAKE SHORE DRIVE
SECTION SW-1818.3-2H

FRAMING PLAN 3

SCALE: 1"=10'-0" DEC. 1964

SHEET NO. 5-36 OF 99 SHEETS

DESIGNED BY V.B.
DRAWN BY B.B.
CHECKED BY B.H.
APPROVED BY K.A.

235-60L70_As-Builts.dgn

AECOM

USER NAME = auyeungh	DESIGNED -	REVISED -
	CHECKED -	REVISED -
PLOT SCALE =	DRAWN - HAY	REVISED -
PLOT DATE = 11/11/2014	CHECKED - ATB	REVISED -

STATE OF ILLINOIS
DEPARTMENT OF TRANSPORTATION

AS-BUILTS

SHEET NO. 72 OF 174 SHEETS

F.A.I. RTE.	SECTION	COUNTY	TOTAL SHEETS	SHEET NO.
55	2010-080-B	COOK	886	389
		CONTRACT NO. 60L70		
	ILLINOIS FED. AID PROJECT			

FOR INFORMATION ONLY

ROUTE NO.	SECTION	COUNTY	TOTAL SHEETS	SHEET NO.
F. A. L.-55	SW-1818.3-2H	COOK	99	58
FED. ROAD DIV. NO. 4	ILLINOIS	PROJECT I.G.-55-7(59)-289		

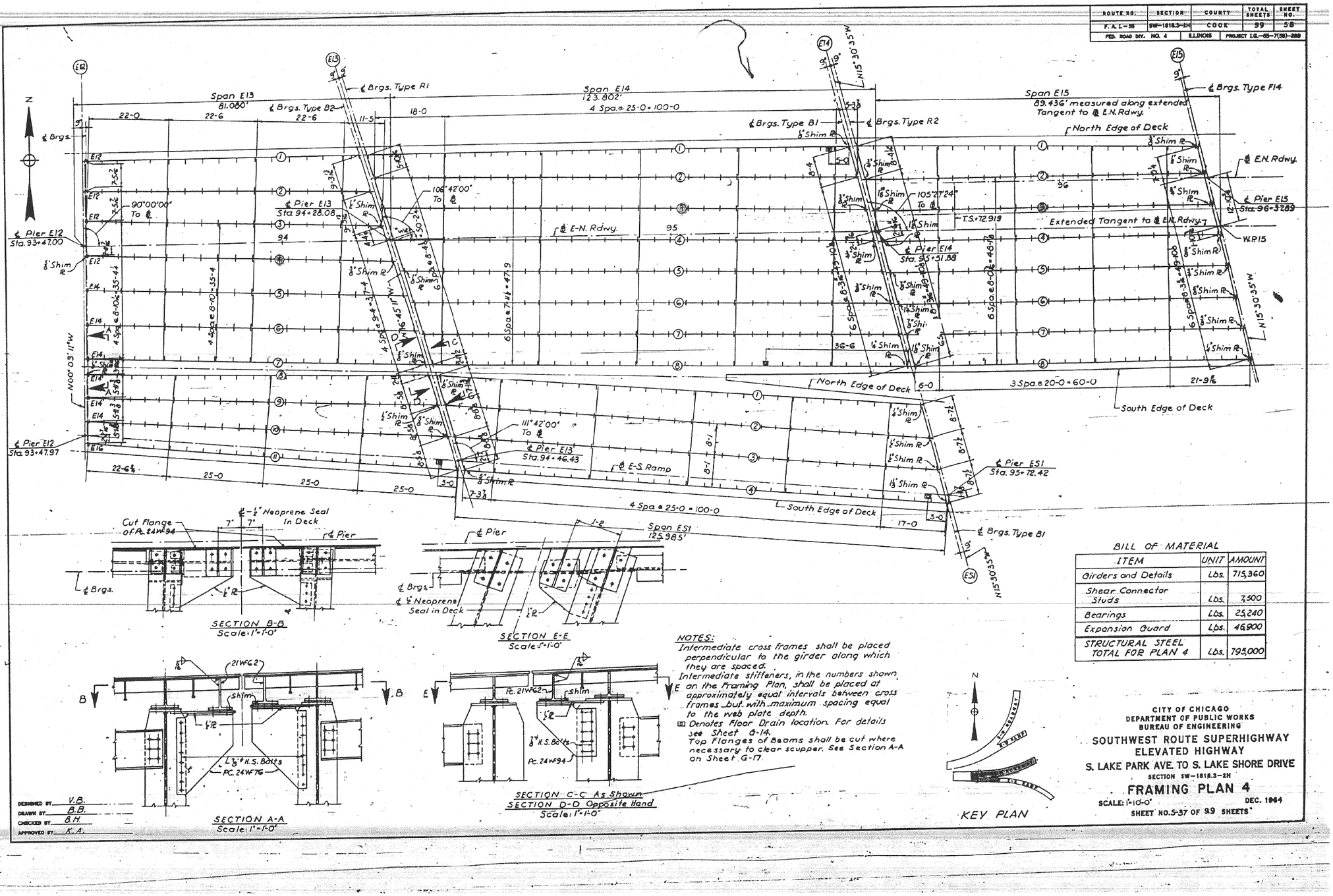

BILL OF MATERIAL

ITEM	UNIT	AMOUNT
Girders and Details	Lbs.	715,360
Shear Connector Studs	Lbs.	7,500
Bearings	Lbs.	25,240
Expansion Guard	Lbs.	46,900
STRUCTURAL STEEL TOTAL FOR PLAN 4	Lbs.	795,000

NOTES:
Intermediate cross frames shall be placed perpendicular to the girder along which they are spaced.
Intermediate stiffeners, in the numbers shown on the Framing Plan, shall be placed at approximately equal intervals between cross frames but with maximum spacing equal to the web plate depth.
Ⓓ Denotes Floor Drain location. For details see Sheet G-14.
Top Flanges of Beams shall be cut where necessary to clear scupper. See Section A-A on Sheet G-17.

DESIGNED BY V.B.
DRAWN BY B.B.
CHECKED BY B.H.
APPROVED BY K.A.

CITY OF CHICAGO
DEPARTMENT OF PUBLIC WORKS
BUREAU OF ENGINEERING

SOUTHWEST ROUTE SUPERHIGHWAY
ELEVATED HIGHWAY
S. LAKE PARK AVE. TO S. LAKE SHORE DRIVE
SECTION SW-1818.3-2H

FRAMING PLAN 4

SCALE: 1"=10'-0" DEC. 1964
SHEET NO. S-37 OF 99 SHEETS

236-60L70_As-Builts.dgn

AECOM	USER NAME = auyeungh	DESIGNED -	REVISED -
		CHECKED -	REVISED -
	PLOT SCALE =	DRAWN - HAY	REVISED -
	PLOT DATE = 11/11/2014	CHECKED - ATB	REVISED -

STATE OF ILLINOIS
DEPARTMENT OF TRANSPORTATION

AS-BUILTS
SHEET NO. 73 OF 174 SHEETS

F.A.I. RTE.	SECTION	COUNTY	TOTAL SHEETS	SHEET NO.
55	2010-080-B	COOK	886	390
		CONTRACT NO. 60L70		
	ILLINOIS FED. AID PROJECT			

FOR INFORMATION ONLY

ROUTE NO.	SECTION	COUNTY	TOTAL SHEETS	SHEET NO.
F. A. I.—55	SW-1818.3-2H	COOK	99	59
FED. ROAD DIV. NO. 4	ILLINOIS	PROJECT I.G.—55-7(38)-289		

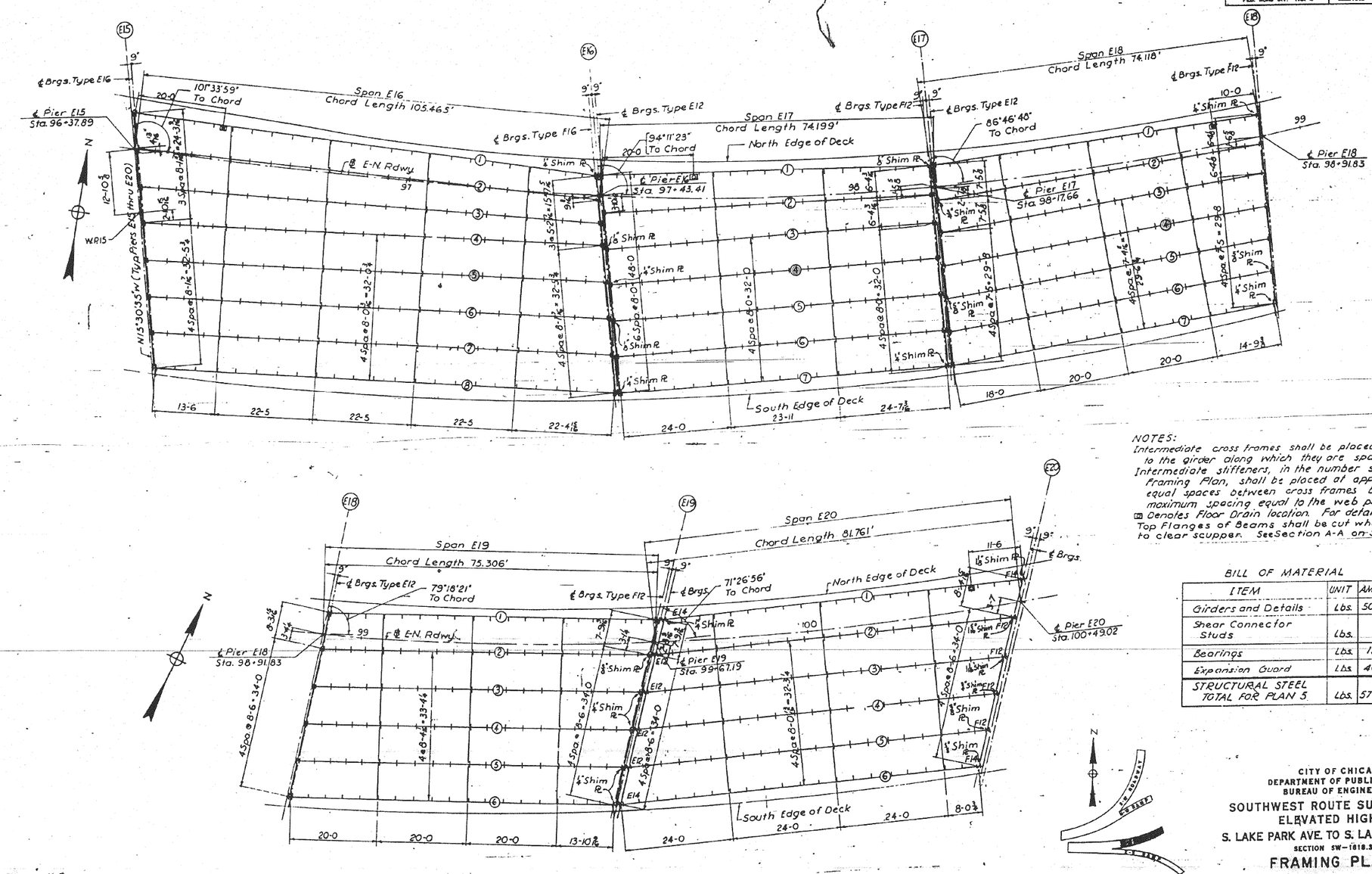

NOTES:
Intermediate cross frames shall be placed perpendicular to the girder along which they are spaced.
Intermediate stiffeners, in the number shown on the Framing Plan, shall be placed at approximately equal spaces between cross frames but with maximum spacing equal to the web plate depth.
℄ Denotes Floor Drain location. For details see Sheet G-14
Top Flanges of Beams shall be cut where necessary to clear scupper. See Section A-A on Sheet G-17.

BILL OF MATERIAL

ITEM	UNIT	AMOUNT
Girders and Details	Lbs.	509,210
Shear Connector Studs	Lbs.	7,220
Bearings	Lbs.	15,750
Expansion Guard	Lbs.	46,890
STRUCTURAL STEEL TOTAL FOR PLAN 5	Lbs.	579,070

CITY OF CHICAGO
DEPARTMENT OF PUBLIC WORKS
BUREAU OF ENGINEERING

SOUTHWEST ROUTE SUPERHIGHWAY
ELEVATED HIGHWAY
S. LAKE PARK AVE. TO S. LAKE SHORE DRIVE
SECTION SW-1818.3-2H

FRAMING PLAN 5

SCALE: 1"=10'-0" DEC. 1964
SHEET NO. 5-38 OF 99 SHEETS

DESIGNED BY V.B
DRAWN BY B.B
CHECKED BY B.H.
APPROVED BY M.A.

237-60L70_As-Builts.dgn

AECOM	USER NAME = auyeungh	DESIGNED -	REVISED -
		CHECKED -	REVISED -
	PLOT SCALE =	DRAWN - HAY	REVISED -
	PLOT DATE = 11/11/2014	CHECKED - ATB	REVISED -

STATE OF ILLINOIS
DEPARTMENT OF TRANSPORTATION

AS-BUILTS
SHEET NO. 74 OF 174 SHEETS

F.A.I. RTE.	SECTION	COUNTY	TOTAL SHEETS	SHEET NO.
55	2010-080-B	COOK	886	391
		CONTRACT NO. 60L70		
	ILLINOIS FED. AID PROJECT			

FOR INFORMATION ONLY

ROUTE NO.	SECTION	COUNTY	TOTAL SHEETS	SHEET NO.
F. A. I.-55	SW-1818.3-2H	COOK	99	GO
FED. ROAD DIV. NO. 4	ILLINOIS	PROJECT I.G.-55-7(39)-389		

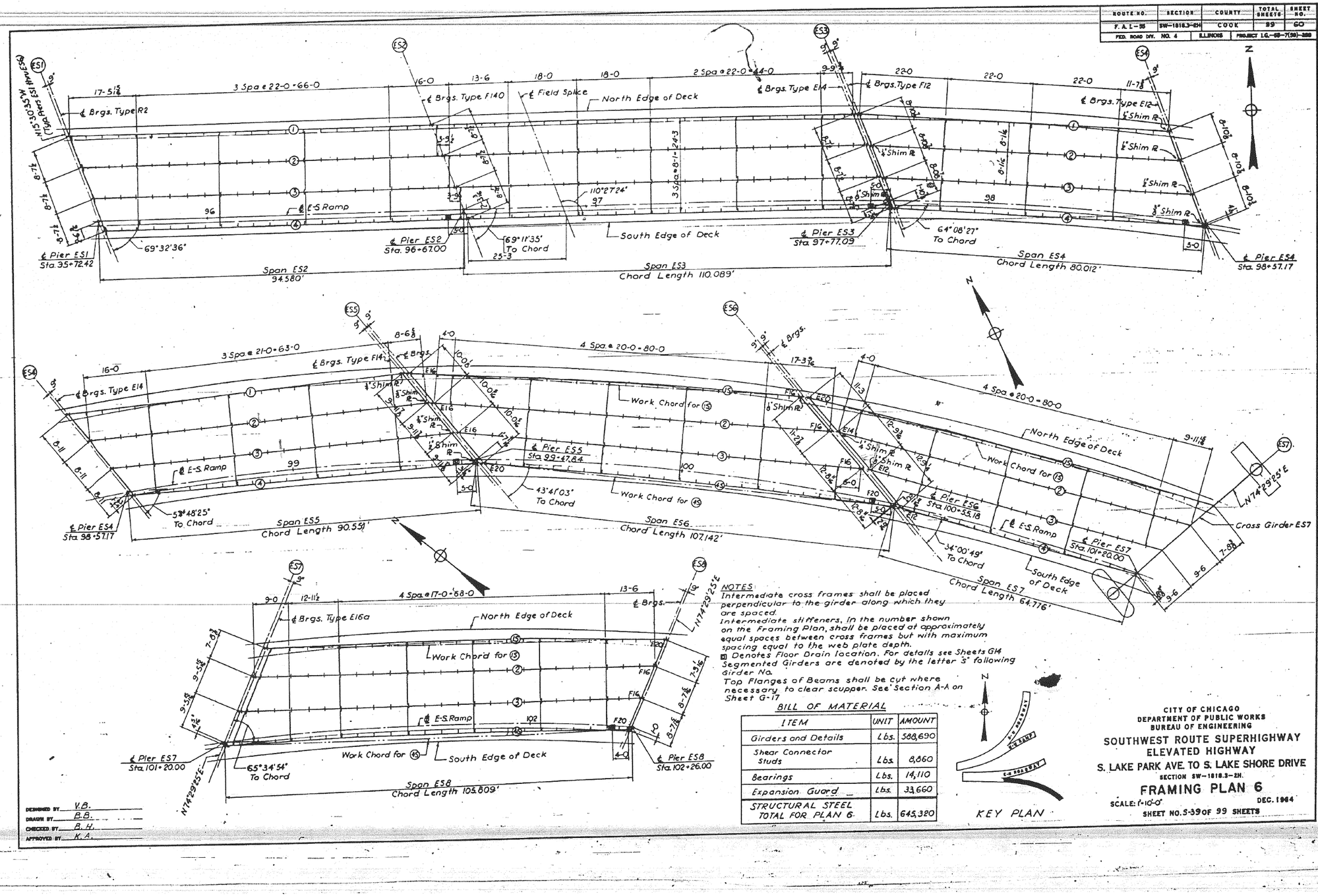

NOTES
Intermediate cross frames shall be placed perpendicular to the girder along which they are spaced.
Intermediate stiffeners, in the number shown on the Framing Plan, shall be placed at approximately equal spaces between cross frames but with maximum spacing equal to the web plate depth.
◘ Denotes Floor Drain location. For details see Sheets G14
Segmented Girders are denoted by the letter 'S' following Girder No.
Top Flanges of Beams shall be cut where necessary to clear scupper. See Section A-A on Sheet G-17

BILL OF MATERIAL

ITEM	UNIT	AMOUNT
Girders and Details	Lbs.	588,690
Shear Connector Studs	Lbs.	8,060
Bearings	Lbs.	14,110
Expansion Guard	Lbs.	33,660
STRUCTURAL STEEL TOTAL FOR PLAN 6	Lbs.	645,320

KEY PLAN

CITY OF CHICAGO
DEPARTMENT OF PUBLIC WORKS
BUREAU OF ENGINEERING
SOUTHWEST ROUTE SUPERHIGHWAY
ELEVATED HIGHWAY
S. LAKE PARK AVE. TO S. LAKE SHORE DRIVE
SECTION SW-1818.3-2H.
FRAMING PLAN 6
SCALE: 1"=10'-0" DEC. 1964
SHEET NO. 5-39 OF 99 SHEETS

DESIGNED BY V.B.
DRAWN BY B.B.
CHECKED BY B.H.
APPROVED BY K.A.

238-60L70_As-Builts.dgn

AECOM

USER NAME = auyeungh	DESIGNED -	REVISED -
	CHECKED -	REVISED -
PLOT SCALE =	DRAWN - HAY	REVISED -
PLOT DATE = 11/11/2014	CHECKED - ATB	REVISED -

STATE OF ILLINOIS
DEPARTMENT OF TRANSPORTATION

AS-BUILTS
SHEET NO. 75 OF 174 SHEETS

F.A.I. RTE.	SECTION	COUNTY	TOTAL SHEETS	SHEET NO.
55	2010-080-B	COOK	886	392
		CONTRACT NO. 60L70		
	ILLINOIS FED. AID PROJECT			

FOR INFORMATION ONLY

ROUTE NO.	SECTION	COUNTY	TOTAL SHEETS	SHEET NO.
F.A.I.-55	SW-1818.3-2H	COOK	99	61
FED. ROAD DIV. NO. 4	ILLINOIS	PROJECT I.G.-55-7(50)-289		

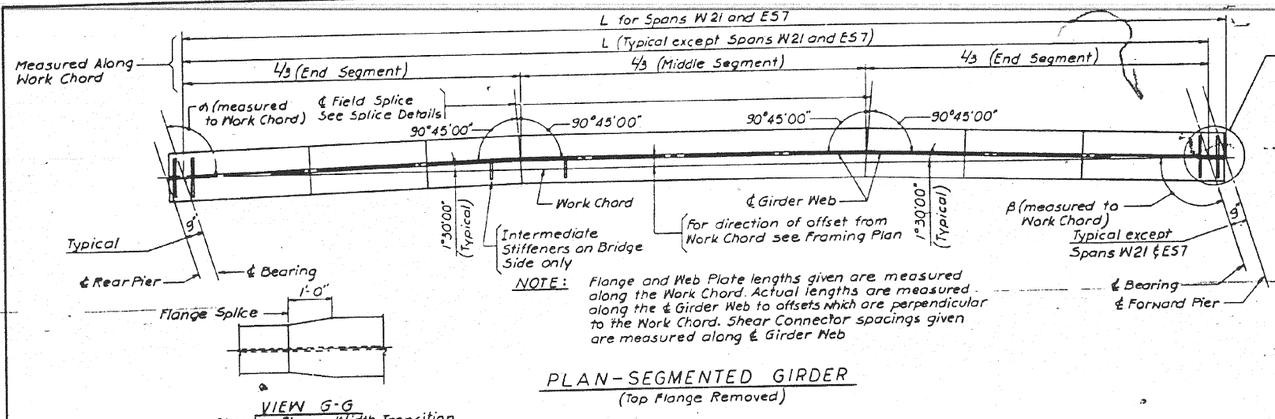

VIEW G-G
Showing Flange Width Transition

PLAN-SEGMENTED GIRDER
(Top Flange Removed)

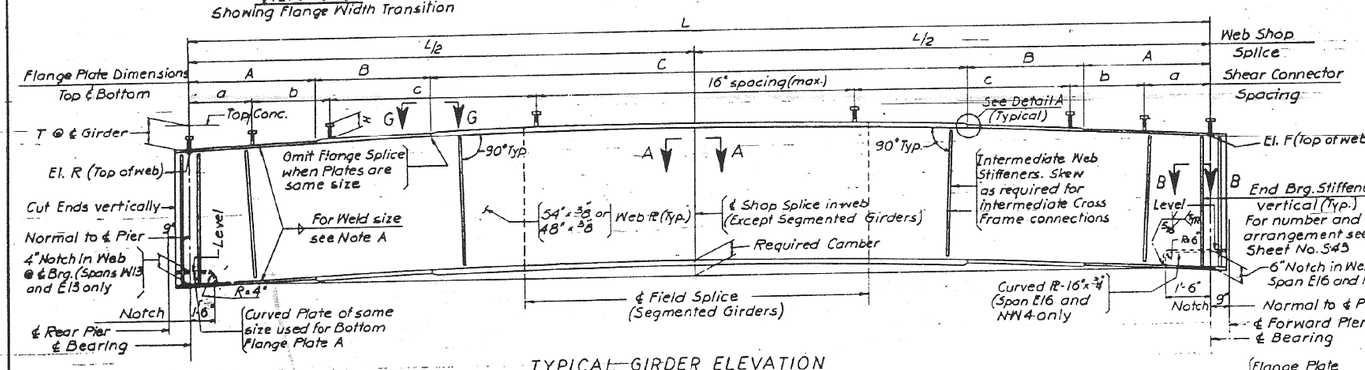

TYPICAL GIRDER ELEVATION
(Straight & Segmented)

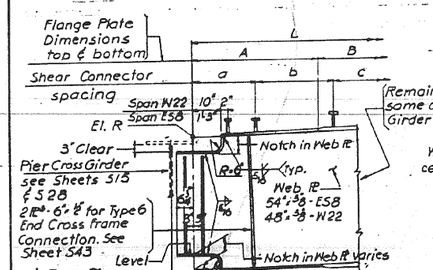

GIRDER PARTIAL ELEVATION
(Spans W22 and E58 only)

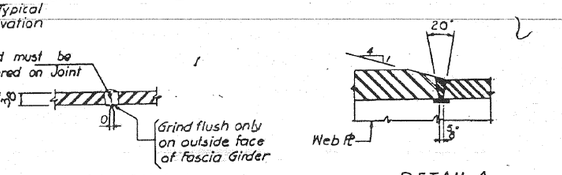

SECTION B-B

TYPICAL WELD DETAILS

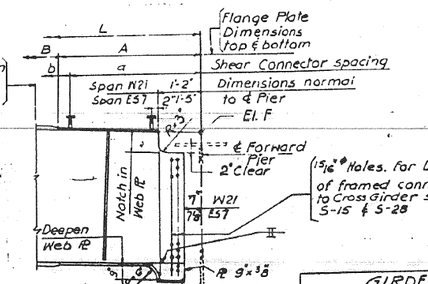

GIRDER PARTIAL ELEVATION
(Spans W21 and E57 only)

Note A
Use following fillet weld size for web to flange weld:

Flange Thickness	Weld size
3/4" to 1 1/2"	5/16"
over 1 1/2" to 2 1/4"	3/8"
over 2 1/4"	1/2"

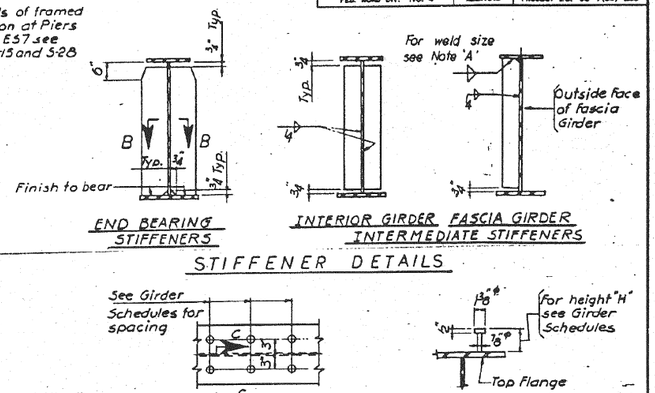

SHEAR CONNECTOR DETAILS

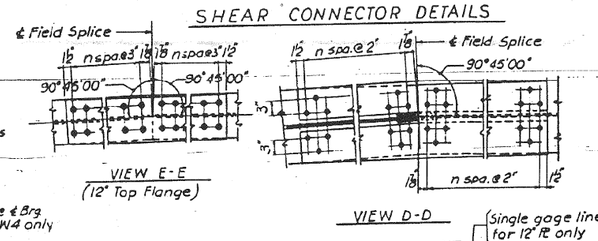

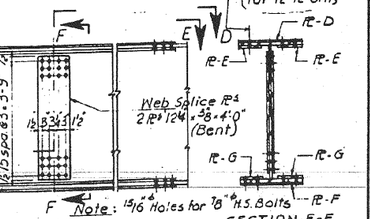

SEGMENTED GIRDER FIELD SPLICE DETAILS

Notes: For Girder information indicated on this Sheet see Girder Schedules, Sheets S-46 through S-48

GIRDER SPLICE DATA

Span	Gr	Top Flange Splice PL D	PL E	n	Bottom Flange Splice PL F	PL G	n
W14	7	14"x 1/4"	6"x 1/8"	21 spa.	20"x 1/4"	9"x 1/8"	28 spa.
W13	7						
W14	8	20"x 1/8"	9"x 1/4"	26 spa.	20"x 1/2"	9"x 1/8"	34 spa.
W13	8						
W21	6	20"x 1"	9"x 1/8"	23 spa.	20"x 1/8"	9"x 1/8"	31 spa.
E56	1	12"x 1/8"	3"x 1/8"	13 spa.	16"x 1/8"	7"x 1/8"	25 spa.
E56	4	14"x 1"	6"x 1/4"	17 spa.	20"x 1/8"	9"x 1/4"	26 spa.
E58	4	14"x 1/4"	6"x 1/8"	19 spa.	20"x 1/4"	9"x 1/4"	28 spa.
E57	1						
E58	1						

CITY OF CHICAGO
DEPARTMENT OF PUBLIC WORKS
BUREAU OF ENGINEERING

SOUTHWEST ROUTE SUPERHIGHWAY
ELEVATED HIGHWAY
S. LAKE PARK AVE. TO S. LAKE SHORE DRIVE
SECTION SW-1818.3-2H

TYPICAL GIRDER DETAILS

SCALE: NO SCALE
DEC. 1964
SHEET NO. S-40 OF 99 SHEETS

DESIGNED BY H.N
DRAWN BY K.M. 3.25.63
CHECKED BY B.H. 4-22-63
APPROVED BY K.A.

239-60L70_As-Builts.dgn

USER NAME = auyeungh	DESIGNED -	REVISED -	
	CHECKED -	REVISED -	
PLOT SCALE =	DRAWN - HAY	REVISED -	
PLOT DATE = 11/11/2014	CHECKED - ATB	REVISED -	

AECOM

STATE OF ILLINOIS
DEPARTMENT OF TRANSPORTATION

AS-BUILTS
SHEET NO. 76 OF 174 SHEETS

F.A.I. RTE.	SECTION	COUNTY	TOTAL SHEETS	SHEET NO.
55	2010-080-B	COOK	886	393
		CONTRACT NO. 60L70		
		ILLINOIS FED. AID PROJECT		

FOR INFORMATION ONLY

ROUTE NO.	SECTION	COUNTY	TOTAL SHEETS	SHEET NO.
F. A. I.—55	SW-1818.3-2H	COOK	99	62
FED. ROAD DIV. NO. 4	ILLINOIS	PROJECT I.Q.—55—7(39)—289		

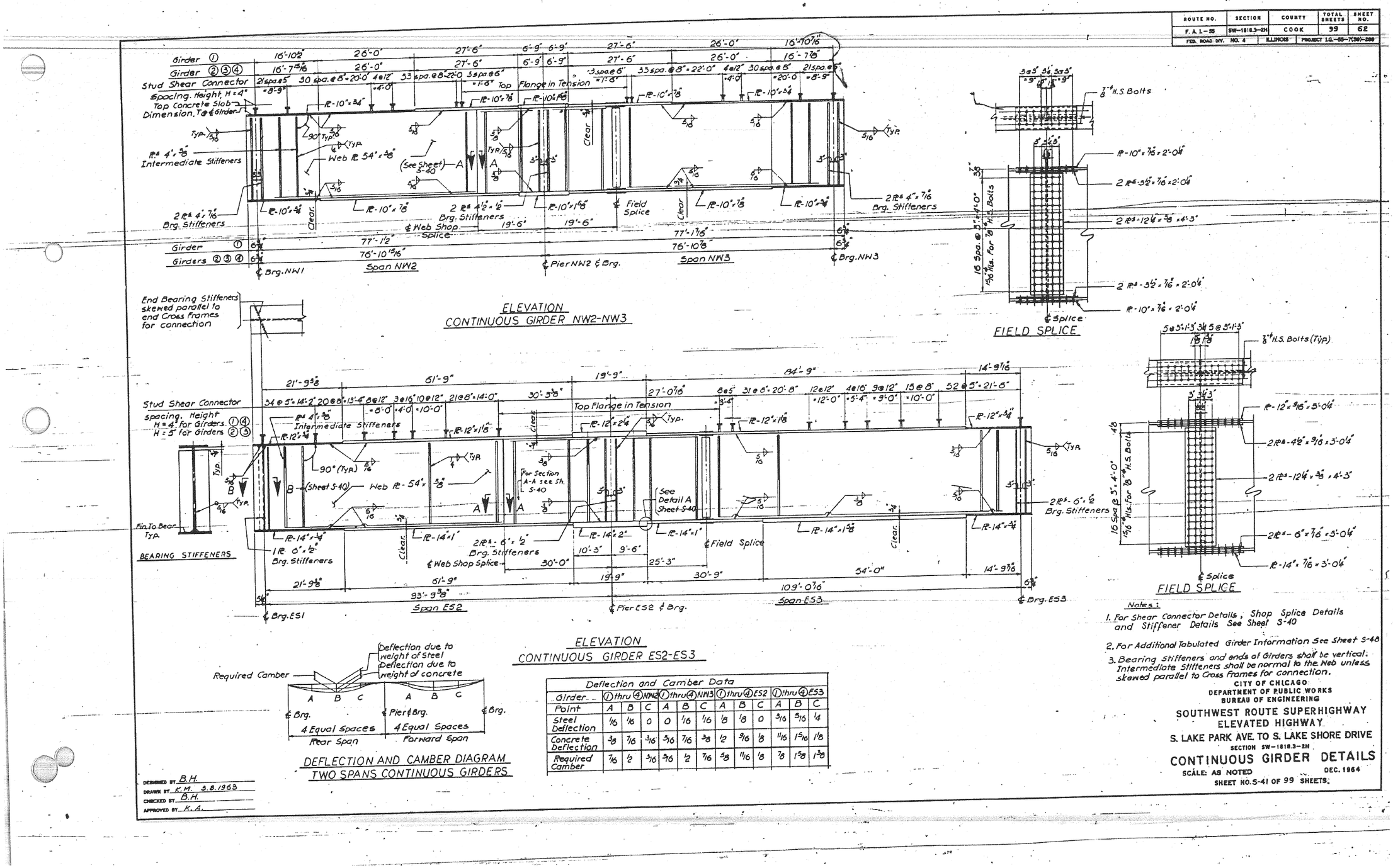

ELEVATION
CONTINUOUS GIRDER NW2-NW3

FIELD SPLICE

End Bearing Stiffeners skewed parallel to end Cross Frames for connection

ELEVATION
CONTINUOUS GIRDER ES2-ES3

FIELD SPLICE

DEFLECTION AND CAMBER DIAGRAM
TWO SPANS CONTINUOUS GIRDERS

Deflection and Camber Data

Girder	① thru ④ NW2			① thru ④ NW3			① thru ④ ES2			① thru ④ ES3		
Point	A	B	C	A	B	C	A	B	C	A	B	C
Steel Deflection	1/16	1/8	0	0	1/16	1/16	1/8	1/8	0	3/16	5/16	1/4
Concrete Deflection	3/8	7/16	3/16	3/16	7/16	3/8	1/2	9/16	1/8	11/16	1 5/16	1/8
Required Camber	7/16	1/2	3/16	3/16	1/2	7/16	5/8	11/16	1/8	7/8	1 5/8	1 3/8

Notes:

1. For Shear Connector Details, Shop Splice Details and Stiffener Details See Sheet S-40
2. For Additional Tabulated Girder Information See Sheet S-48
3. Bearing Stiffeners and ends of Girders shall be vertical. Intermediate Stiffeners shall be normal to the Web unless skewed parallel to Cross Frames for connection.

DESIGNED BY B.H.
DRAWN BY K.M. 3.8.1963
CHECKED BY B.H.
APPROVED BY K.A.

CITY OF CHICAGO
DEPARTMENT OF PUBLIC WORKS
BUREAU OF ENGINEERING

SOUTHWEST ROUTE SUPERHIGHWAY
ELEVATED HIGHWAY
S. LAKE PARK AVE. TO S. LAKE SHORE DRIVE
SECTION SW-1818.3-2H

CONTINUOUS GIRDER DETAILS

SCALE: AS NOTED DEC. 1964
SHEET NO. S-41 OF 99 SHEETS.

240-60L70_As-Builts.dgn

USER NAME = auyeungh	DESIGNED -	REVISED -	
	CHECKED -	REVISED -	
PLOT SCALE =	DRAWN - HAY	REVISED -	
PLOT DATE = 11/11/2014	CHECKED - ATB	REVISED -	

AECOM

STATE OF ILLINOIS
DEPARTMENT OF TRANSPORTATION

AS-BUILTS
SHEET NO. 77 OF 174 SHEETS

F.A.I. RTE.	SECTION	COUNTY	TOTAL SHEETS	SHEET NO.
55	2010-080-B	COOK	886	394
		CONTRACT NO. 60L70		
		ILLINOIS	FED. AID PROJECT	

FOR INFORMATION ONLY

ROUTE NO.	SECTION	COUNTY	TOTAL SHEETS	SHEET NO.
F. A. I.—55	SW-1818.3-2H	COOK	99	63
FED. ROAD DIV. NO. 4	ILLINOIS	PROJECT I.G.-55-7(39)-288		

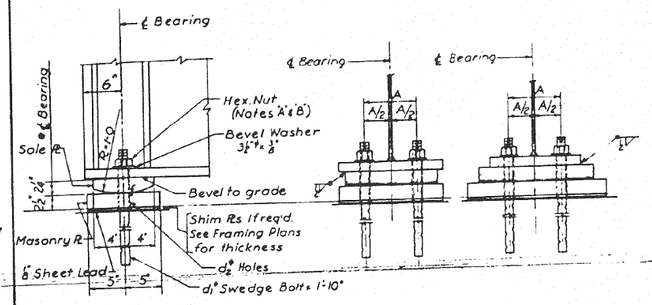

FIXED BEARING TYPE F
(See Table for Additional Dimensions)

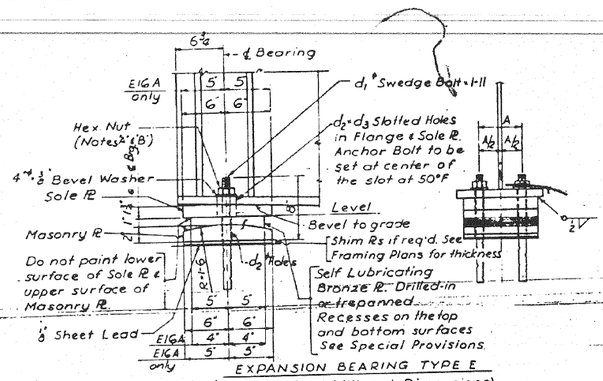

EXPANSION BEARING TYPE E
(See Table for Additional Dimensions)

FIXED BEARING TYPE F TABLE

Mark	Total	Sole PL *	Masonry PL	Lead PL	A	d_1"	d_2"
F12	57	8"x2'-0"x0'-10½"	10"x2'-1"x1'-0"	10"x8"x1'-0"	6"	1⅛"	1⅜"
F14	25	8"x2'-4"x1'-0"	10"x2'-1"x1'-2"	10"x8"x1'-2"	7"	1⅛"	1⅜"
F16	19	8"x2'-4"x1'-1"	10"x2'-1"x1'-3"	10"x8"x1'-3"	7"	1¼"	1⅜"
F20	3	8"x2'-4"x1'-4"	10"x2'-1"x1'-6"	10"x8"x1'-6"	7"	1⅜"	1⅜"
F100	4	8"x2'-4"x1'-4"	10"x2'-1"x1'-9"	10"x8"x1'-9"	6"	1⅜"	1⅜"
F140	4	8"x2'-4"x1'-8"	10"x2'-1"x2'-3"	10"x8"x2'-3"	7"	1½"	1⅜"

EXPANSION BEARING TYPE E TABLE

Mark	Total	Sole PL *	Bronze PL	Masonry PL	Lead PL ‡	A	d_1"	d_2"	d_2+d_3"
E10	10	12"x1⅜"x0'-8½"	10"x1⅜"x0'-8½"	12"x2'-0"x0'-8½"	12"x8"x0'-8½"	6"	1⅛"	1⅝"	1⅜"+2⅜"
E12	64	12"x1⅜"x0'-10½"	10"x1⅜"x0'-10½"	12"x2'-0"x0'-10½"	12"x8"x0'-10½"	6"	1⅛"	1⅜"	1⅜"+2⅜"
E14	29	12"x1⅜"x1'-0½"	10"x1⅜"x1'-0½"	12"x2'-1"x0'-10½"	12"x8"x1'-0½"	7"	1¼"	1⅜"	1⅜"+2⅜"
E16	13	12"x1⅜"x1'-2"	10"x1⅜"x1'-2"	12"x2'-1"x1'-2"	12"x8"x1'-2"	7"	1½"	1⅜"	1⅜"+3"
E20	3	12"x1⅜"x1'-6"	10"x1⅜"x1'-6"	12"x2'-1"x1'-6"	12"x8"x1'-6"	7"	1⅜"	1⅜"	1⅜"+3"
E16A	10	10"x1⅜"x1'-2	8"x1⅜"x1'-2"	10"x2'-1"x1'-2"	none	7"	#	1⅜"	1⅜"+3"

* 1⅜"x0'-9½" Steel bolt with Hex. Hd. and nut (see Notes 'A' & 'B')
‡ Thickness shown is at ℄ Bearing.

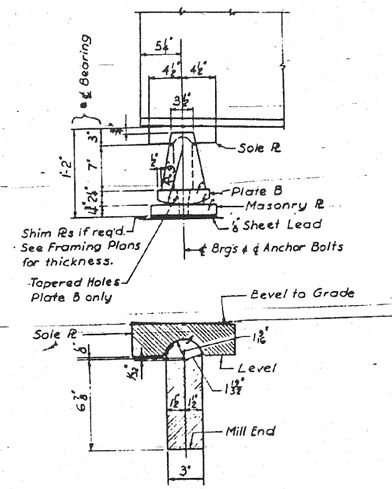

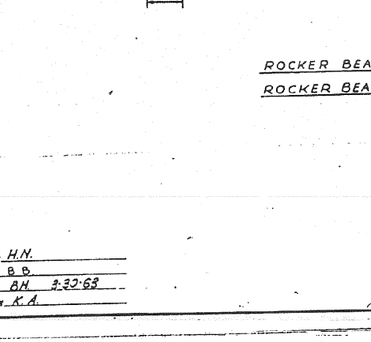

ROCKER BEARING TYPE R1 As Shown (28 Required)

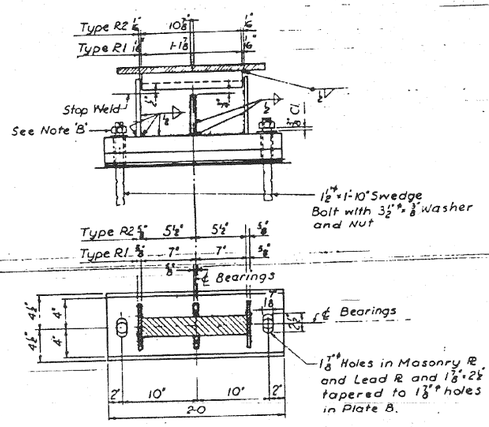

ROCKER BEARING TYPE R2 As Noted (20 Required)

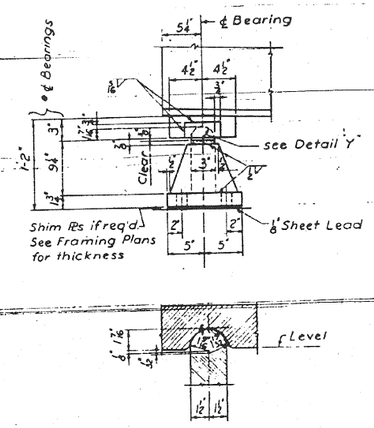

DETAIL 'Y'

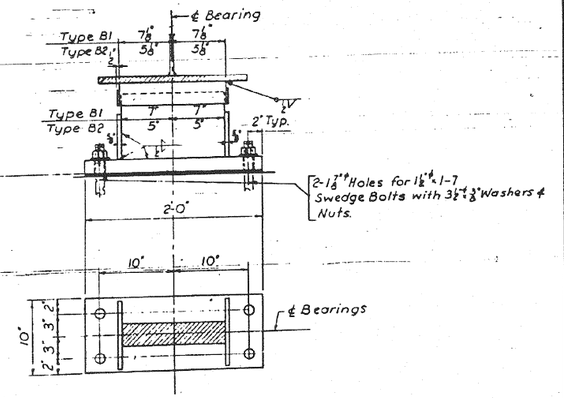

BOLSTER BEARING TYPE B1 As Shown (28 Required)
BOLSTER BEARING TYPE B2 As noted (19 Required)

NOTES:
A. Nut shall be drawn up finger tight, then backed off ⅓ turn.
B. After nut is properly adjusted, burr off threads of bolt at face of nut with a pointed tool. Shim plates to be same width and length as bottom plates. For location and thickness of shim plates see Sheets S-34 thru S-39

CITY OF CHICAGO
DEPARTMENT OF PUBLIC WORKS
BUREAU OF ENGINEERING
SOUTHWEST ROUTE SUPERHIGHWAY
ELEVATED HIGHWAY
S. LAKE PARK AVE. TO S. LAKE SHORE DRIVE
SECTION SW-1818.3-2H
BEARING DETAILS
SCALE: AS NOTED
DEC. 1964
SHEET NO. S-42 OF 99 SHEETS

DESIGNED BY H.N.
DRAWN BY B.B.
CHECKED BY B.H. 3-30-65
APPROVED BY K.A.

241-60L70_As-Builts.dgn

AECOM	USER NAME = auyeungh	DESIGNED -	REVISED -	STATE OF ILLINOIS DEPARTMENT OF TRANSPORTATION	AS-BUILTS	F.A.I. RTE.	SECTION	COUNTY	TOTAL SHEETS	SHEET NO.
		CHECKED -	REVISED -			55	2010-080-B	COOK	886	395
	PLOT SCALE =	DRAWN - HAY	REVISED -						CONTRACT NO. 60L70	
	PLOT DATE = 11/11/2014	CHECKED - ATB	REVISED -		SHEET NO. 78 OF 174 SHEETS			ILLINOIS	FED. AID PROJECT	

FOR INFORMATION ONLY

ROUTE NO.	SECTION	COUNTY	TOTAL SHEETS	SHEET NO.
F.A.I.-55	SW-1818.3-2H	COOK	99	G4
FED. ROAD DIV. NO. 4	ILLINOIS	PROJECT I.G.-55-7(39)-239		

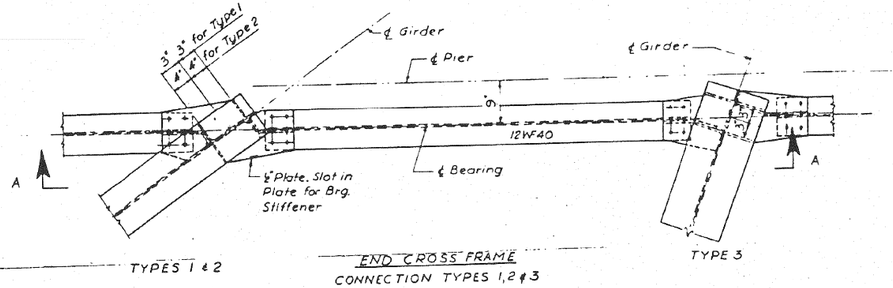

END CROSS FRAME
CONNECTION TYPES 1, 2 & 3

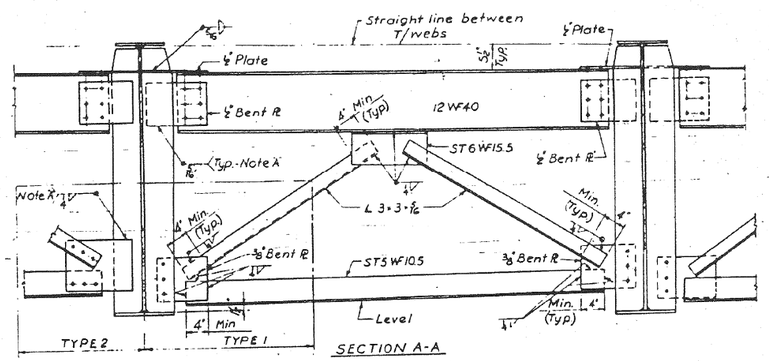

SECTION A-A

NOTE A:
Weld to stiffener prior to placing stiffener in position.

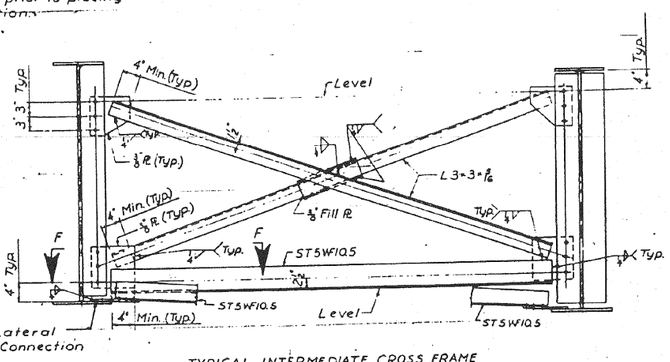

TYPICAL INTERMEDIATE CROSS FRAME

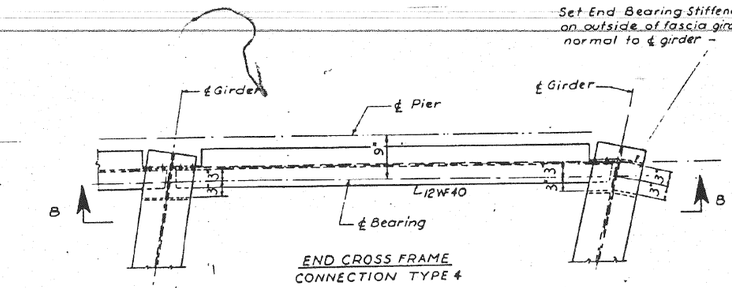

END CROSS FRAME
CONNECTION TYPE 4

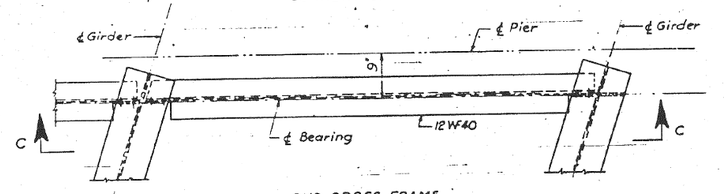

END CROSS FRAME
CONNECTION TYPE 5

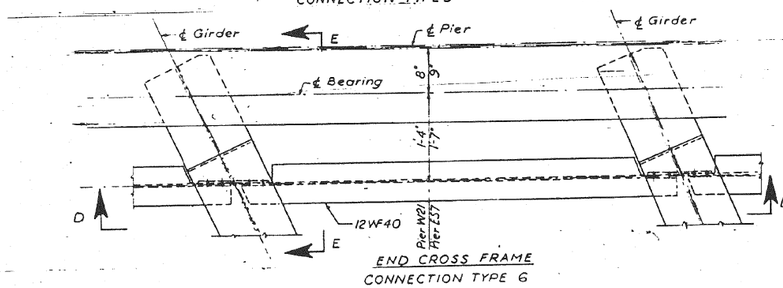

END CROSS FRAME
CONNECTION TYPE 6

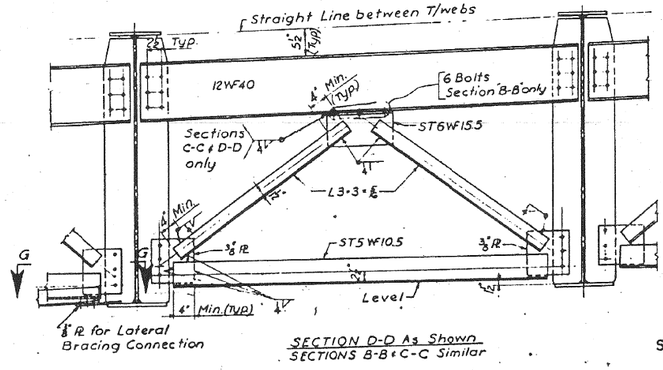

SECTION D-D As Shown
SECTIONS B-B & C-C Similar

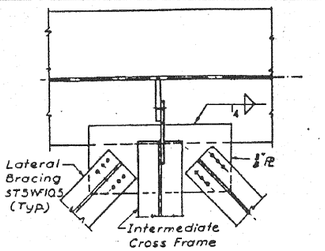

SECTION F-F

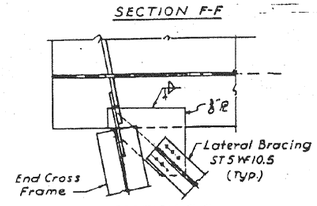

SECTION G-G

LATERAL CHORD BRACING DETAILS

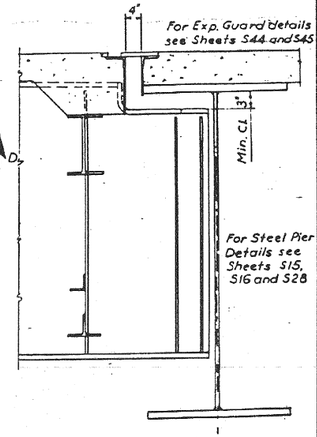

SECTION E-E

NOTE: All bolted connections shown on this sheet shall be made with ¾" High Strength Bolts
For location of typical End Cross Frames see Girder Schedule Sh. No. S-46 thru S-48.

DESIGNED BY H.N.
DRAWN BY A.B.
CHECKED BY B.H.
APPROVED BY K.A.

CITY OF CHICAGO
DEPARTMENT OF PUBLIC WORKS
BUREAU OF ENGINEERING

SOUTHWEST ROUTE SUPERHIGHWAY
ELEVATED HIGHWAY
S. LAKE PARK AVE. TO S. LAKE SHORE DRIVE
SECTION SW-1818.3-2H

TYPICAL CROSS FRAME DETAILS

SCALE: AS NOTED DEC. 1964
SHEET NO. S-43 OF 99 SHEETS

242-60L70_As-Builts.dgn

AECOM	USER NAME = auyeungh	DESIGNED -	REVISED -
		CHECKED -	REVISED -
	PLOT SCALE =	DRAWN - HAY	REVISED -
	PLOT DATE = 11/11/2014	CHECKED - ATB	REVISED -

STATE OF ILLINOIS
DEPARTMENT OF TRANSPORTATION

AS-BUILTS

SHEET NO. 79 OF 174 SHEETS

F.A.I. RTE.	SECTION	COUNTY	TOTAL SHEETS	SHEET NO.
55	2010-080-B	COOK	886	396
		CONTRACT NO. 60L70		
	ILLINOIS	FED. AID PROJECT		

FOR INFORMATION ONLY

ROUTE NO.	SECTION	COUNTY	TOTAL SHEETS	SHEET NO.
F. A. I. — 55	SW-1818.3-2H	COOK	99	65
FED. ROAD DIV. NO. 4	ILLINOIS	PROJECT I.G.-55-7(50)-299		

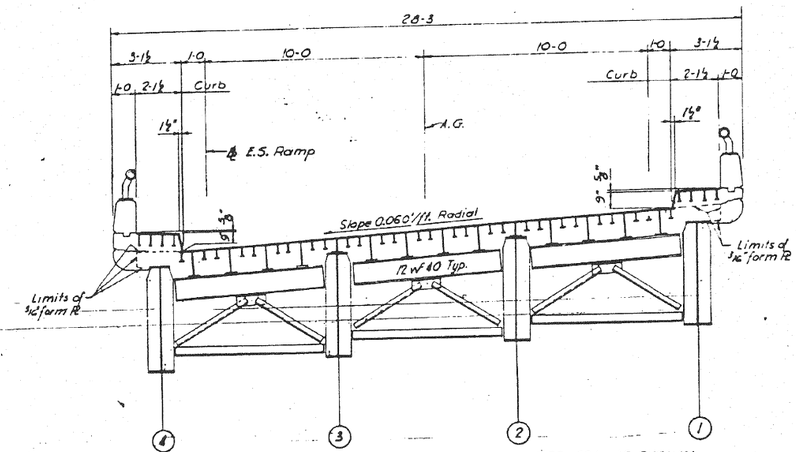

TYPICAL RAMP EXPANSION GUARD ELEVATION - PIER ES4 AS SHOWN
ALL OTHER EXPANSION GUARDS ON RAMP STRUCTURES SIMILAR
Scale ⅜"=1-0

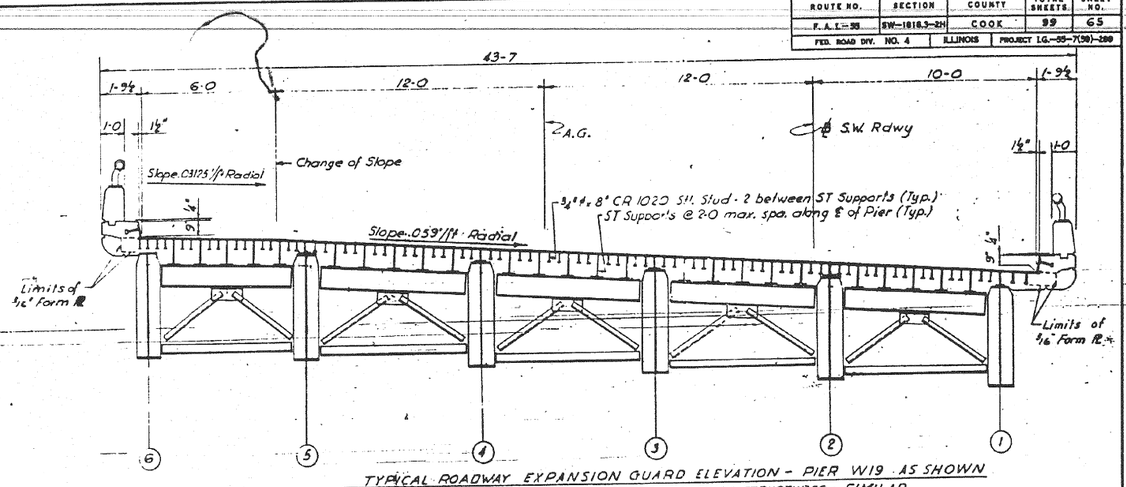

TYPICAL ROADWAY EXPANSION GUARD ELEVATION - PIER W19 AS SHOWN
ALL OTHER EXPANSION GUARDS ON ROADWAY STRUCTURES - SIMILAR
Scale ⅜"=1-0

NOTE: Dimensions shown are Radial Distances

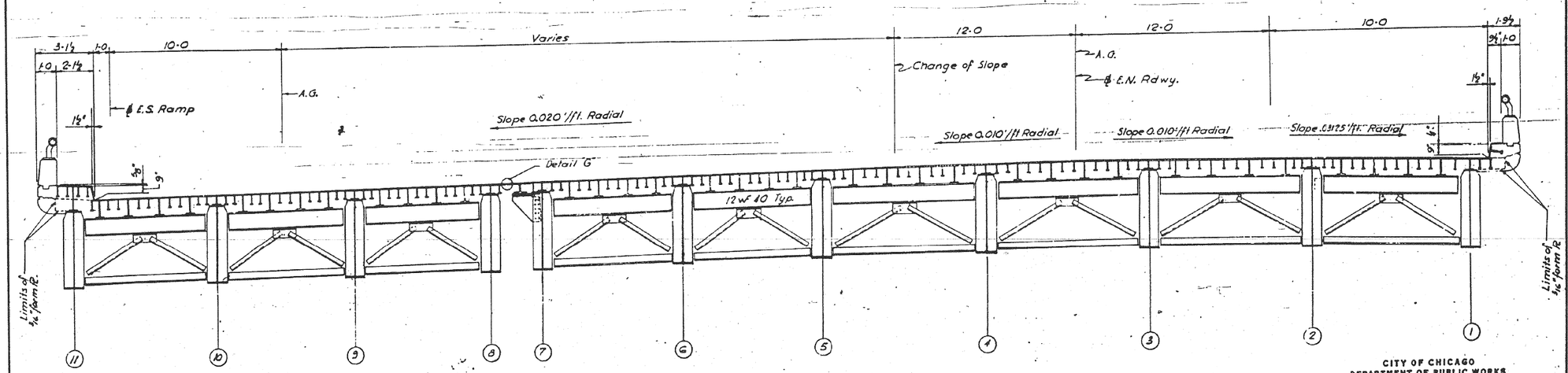

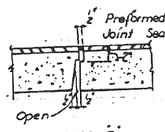

DETAIL 'G'

ELEVATION OF EXPANSION GUARD AT PIER E13
Scale ⅜"=1-0

Note: For Expansion Guard elevations and dimensions see Sheets S-49 thru S-51

DESIGNED BY H.N.
DRAWN BY E.L. 4-3-63
CHECKED BY BH 4-4-63
APPROVED BY K.A.

CITY OF CHICAGO
DEPARTMENT OF PUBLIC WORKS
BUREAU OF ENGINEERING

SOUTHWEST ROUTE SUPERHIGHWAY
ELEVATED HIGHWAY
S. LAKE PARK AVE. TO S. LAKE SHORE DRIVE
SECTION SW-1818.3-2H

EXPANSION GUARD DETAILS

SCALE: AS NOTED DEC. 1964
SHEET NO. S-44 OF 99 SHEETS

243-60L70_As-Builts.dgn

AECOM

USER NAME = auyeungh	DESIGNED -	REVISED -
	CHECKED -	REVISED -
PLOT SCALE =	DRAWN - HAY	REVISED -
PLOT DATE = 11/11/2014	CHECKED - ATB	REVISED -

STATE OF ILLINOIS
DEPARTMENT OF TRANSPORTATION

AS-BUILTS

SHEET NO. 80 OF 174 SHEETS

F.A.I. RTE.	SECTION	COUNTY	TOTAL SHEETS	SHEET NO.
55	2010-080-B	COOK	886	397
		CONTRACT NO. 60L70		
	ILLINOIS	FED. AID PROJECT		

FOR INFORMATION ONLY

ROUTE NO.	SECTION	COUNTY	TOTAL SHEETS	SHEET NO.
F. A. I.—55	SW-1818.3-2H	COOK	99	66
FED. ROAD DIV. NO. 4	ILLINOIS	PROJECT I.G.—55-7(39)-280		

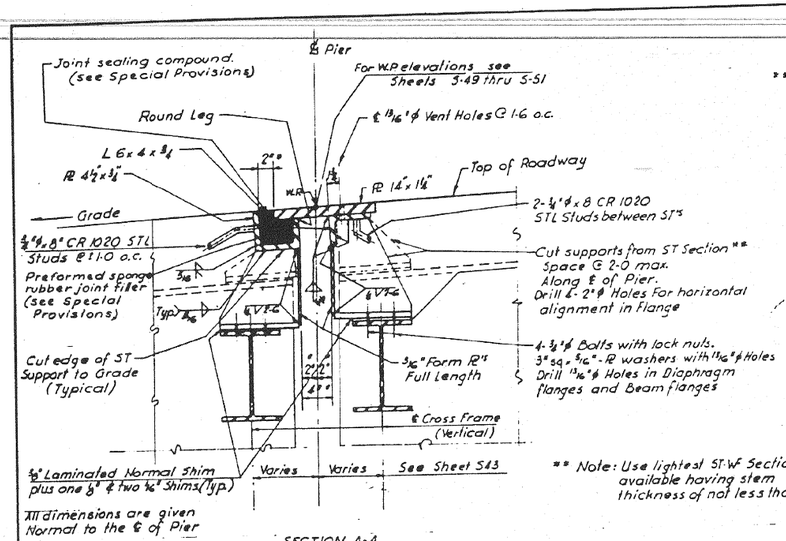

SECTION A-A
TYPICAL EXPANSION GUARD & CONCRETE PIERS
Scale 1½"=1-0

** Note: Use lightest ST. WF Sections available having stem thickness of not less than ⅜"

Joint Adjustment Table For 100' of Girder - length						
Temperatures	110° F	90° F	70° F	50° F	30° F	10° F
Adjustment "S" along ℄ of beam	-0.468"	-0.312"	-0.156"	0"	+0.156"	+0.312"

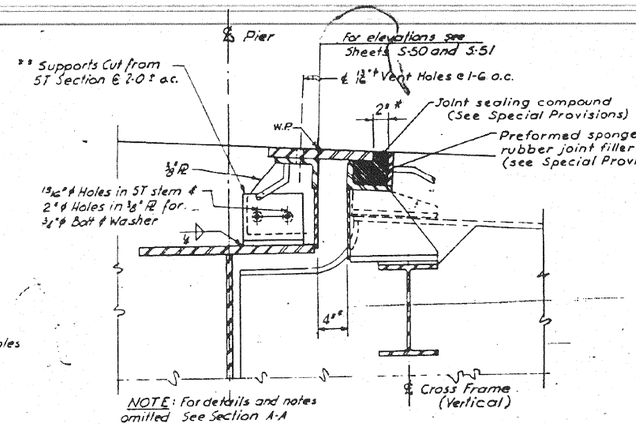

NOTE: For details and notes omitted See Section A-A

TYPICAL SECTION THROUGH EXPANSION GUARD AT STEEL PIERS
Scale 1½"=1-0

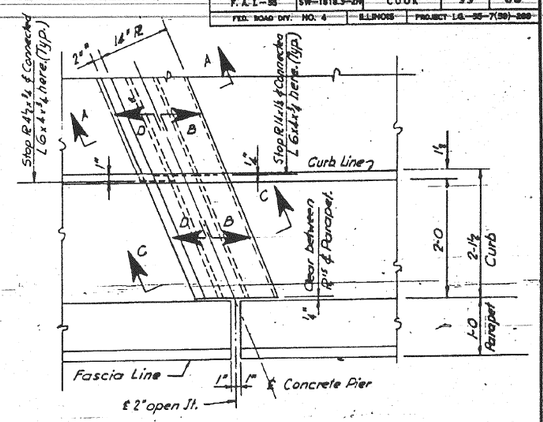

PARTIAL DECK PLAN WITH - 2'-1½" CURB
Scale 1"=1'-0

* Note:
Dimensions marked so (*) shall be used at 50°F. for temperatures other than 50°F adjustment will be made in accordance, with table below. Adjustment shall be made along ℄ of beam marked ⓓ in the girder schedule. Multiply values given in the table by the length of girder in feet and divide by 100. This is the required adjustment measured along ℄ of girder.

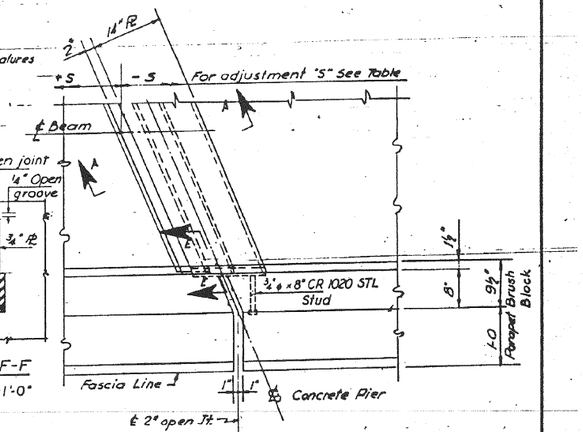

PARTIAL DECK PLAN WITH 9½" CURB
Scale 1"=1-0

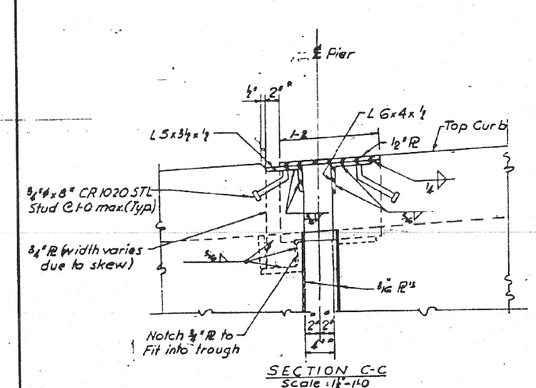

SECTION C-C
Scale 1½"=1-0

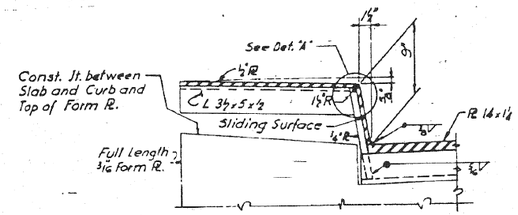

SECTION D-D
Scale 1½"=1-0"

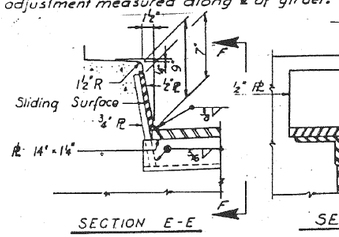

SECTION E-E
Scale 1½"=1-0"

SECTION F-F
Scale: 1½"=1-0"

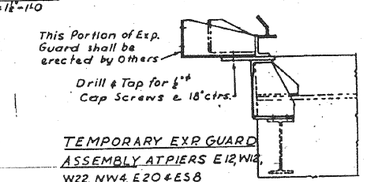

TEMPORARY EXP GUARD ASSEMBLY AT PIERS E12, W12, W22, NW4, E20 & ES8
(No Scale)

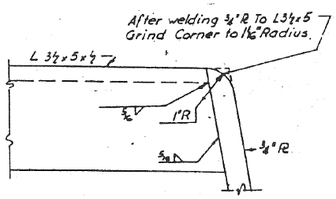

DETAIL "A"
Scale 6"=1-0

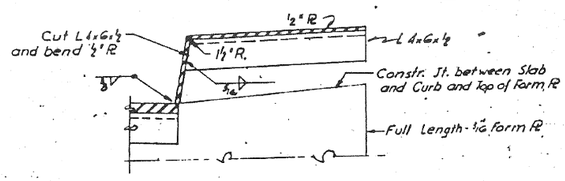

SECTION B-B
Scale 1½"=1-0"

DESIGNED BY H.N.
DRAWN BY E.L.
CHECKED BY BH 4-5-63
APPROVED BY K.A

CITY OF CHICAGO
DEPARTMENT OF PUBLIC WORKS
BUREAU OF ENGINEERING

SOUTHWEST ROUTE SUPERHIGHWAY
ELEVATED HIGHWAY
S. LAKE PARK AVE. TO S. LAKE SHORE DRIVE
SECTION-SW-1818.3-2H

EXPANSION GUARD DETAILS

SCALE: AS NOTED DEC. 1964
SHEET NO. 5-45 OF 99 SHEETS

244-60L70_As-Builts.dgn

AECOM

USER NAME = auyeungh	DESIGNED -	REVISED -
	CHECKED -	REVISED -
PLOT SCALE =	DRAWN - HAY	REVISED -
PLOT DATE = 11/11/2014	CHECKED - ATB	REVISED -

STATE OF ILLINOIS
DEPARTMENT OF TRANSPORTATION

AS-BUILTS
SHEET NO. 81 OF 174 SHEETS

F.A.I. RTE.	SECTION	COUNTY	TOTAL SHEETS	SHEET NO.
55	2010-080-B	COOK	886	398
		CONTRACT NO. 60L70		
	ILLINOIS FED. AID PROJECT			

ROUTE NO.	SECTION	COUNTY	TOTAL SHEETS	SHEET NO.
F. A. L-55	SW-1818.3-2H	COOK	99	67
FED. ROAD DIV. NO. 4	ILLINOIS	PROJECT I.G.-55-7(59)-280		

Handwritten margin notes: 1.520 R.F. (inv.), 1.534, 1.685, 1.587, 1.672, 1.732, 1.659, 1.549, 1.492, 1.744, 1.714

SPAN	GIRDER	L	WEB PL.	GIRDER DIMENSIONS A	B	C	CAMBER	TOP FLANGE PLATES A	B	C	BOTTOM FLANGE PLTS. A	B	C	STIFFENERS BRG.	INT.	SHEAR CONNECTOR SPACING a	b	c	STUD HEIGHT H
W13	†1	62-1 3/16	54×3/8	—	—	62-1 3/16	5/8	—	—	10×3/4	—	—	12×3/4	6×1/2	4×3/8	16@6"	21@8"	8@12"	4"
	†2	64-4 1/4		25-8	—	13-0 1/4	5/8	10×3/4	—	10×3/4	12×3/4	—	12×7/8			16@6"	21@8"	8@12"	
	†[3]	66-7 1/4		21-3	—	24-1 1/4	3/4	10×3/4	—	10×3/4	12×3/4	—	12×7/8			20@6"	21@8"	7@12"	
	†4	68-11 1/4		17-3	—	34-5 1/4	3/4	10×3/4	—	10×3/4	12×3/4	—	12×1			26@6"	13@8"	6@12"	
	†5	71-3 1/4		20-0	—	31-3 1/4	1 1/8	10×3/4	—	10×3/4	12×3/4	—	12×1 1/8			11@7"	27@8"	8@12"	
	†6	73-7 5/16		16-6	—	40-7 5/16	1 1/8	10×3/4	—	10×3/4	12×3/4	—	12×1 1/4			24@6"	22@8"	8@12"	
	†7	75-11 5/16		16-6	9-0	24-11 5/16	1 1/4	10×3/4	10×3/4	10×3/4	12×3/4	12×1 1/8	12×1 3/8			32@6"	17@8"	8@12"	
W13	†8	78-3 5/16		16-6	8-0	29-3 5/16	1 3/8	10×3/4	10×3/4	10×3/4	12×3/4	12×1 1/8	12×1 3/8	6×1/2	4×3/8	32@6"	17@8"	8@12"	4"
W14	1S	120-2 3/16		13-0	15-0	64-2 3/8	2 5/8	14×3/4	14×1 1/2	14×2 5/8	20×7/8	20×1 3/4	20×2 1/2	9×3/4	6×3/8	25@6"	36@8"	12@12"	*6"or4"
	2	120-0 1/2		16-0	20-0	48-0 1/2	3 1/4	14×3/4	14×1 1/4	14×1 5/8	20×7/8	20×1 5/8	20×1 7/8						*6or5"
	[3]	119-10 7/16		16-0	20-0	47-10 7/16	3 1/4	14×3/4	14×1 1/4	14×1 5/8	20×7/8	20×1 5/8	20×1 7/8						
	4	119-8 3/8	—	17-0	19-0	47-8 3/8	3 3/8	14×3/4	14×1 3/8	14×1 3/4	20×7/8	20×1 5/8	20×2						
	5	119-6 5/16		17-0	19-0	47-6 5/16	3 7/8	14×3/4	14×1 3/8	14×1 3/4	20×7/8	20×1 5/8	20×2						
	6	119-4 3/16		17-0	19-0	47-4 3/16	3 7/8	14×3/4	14×1 3/8	14×1 3/4	20×7/8	20×1 5/8	20×2						
	7	119-2 1/8		16-0	20-0	47-2 1/8	3 1/4	14×3/4	14×1 1/4	14×1 5/8	20×7/8	20×1 5/8	20×1 7/8						*6or5
W14	8S	119-0 5/16		12-0	14-6	66-0 5/16	2	16×7/8	18×1 1/2	20×2 1/4	20×1	20×2	20×3						4"
W15	1S	113-8 3/16		13-0	15-0	62-8 3/16	2 3/8	14×3/4	14×1 1/2	14×2 5/8	20×7/8	20×1 3/4	20×2 1/2						*6"or4"
	2	119-4 1/8		16-0	20-0	47-4 1/8	3 1/4	14×3/4	14×1 1/4	14×1 5/8	20×7/8	20×1 5/8	20×1 7/8						*6or5
	[3]	119-7 13/16		16-0	20-0	47-7 13/16	3 1/4	14×3/4	14×1 1/4	14×1 5/8	20×7/8	20×1 5/8	20×1 7/8						
	4	120-3 3/8		17-0	19-0	48-3 3/8	3 7/8	14×3/4	14×1 3/8	14×1 3/4	20×7/8	20×1 5/8	20×2						
	5	120-10 15/16		17-0	19-0	48-10 15/16	3 7/8	14×3/4	14×1 3/8	14×1 3/4	20×7/8	20×1 5/8	20×2						
	6	121-6 1/2		17-0	19-0	49-6 1/2	3 7/8	14×3/4	14×1 3/8	14×1 3/4	20×7/8	20×1 5/8	20×2						
	7	122-2 1/16		17-0	19-0	50-2 1/16	3 7/8	14×3/4	14×1 3/8	14×1 3/4	20×7/8	20×1 5/8	20×2						*6or5
W15	8S	122-8 5/16		12-0	14-6	69-8 5/16	2 3/8	16×7/8	18×1 1/2	20×2 1/4	20×1	20×2	20×3	9×3/4	6×3/8	25@6"	36@8"	12@12"	5"
W16	1	76-1 7/8		18-3	—	39-7 7/8	1 1/4	10×3/4	—	10×3/4	12×3/4	—	12×1 1/8	6×1/2	4×3/8	11@7"	27@8"	8@12"	5"
	2	74-10 3/16		20-0	—	34-10 3/16	1 1/8	10×3/4	—	10×3/4	12×3/4	—	12×1 1/8			11@7"	27@8"		4"
	3	73-7 1/8		20-0	—	33-7 1/8	1 1/8	10×3/4	—	10×3/4	12×3/4	—	12×1 1/8			11@7"	27@8"		
	[4]	72-4 11/16		16-6	—	39-4 11/16	1 1/8	10×3/4	—	10×3/4	12×3/4	—	12×1 1/4			24@6"	22@8"		
	5	71-8 3/16		16-6	—	38-8 3/16	1 1/8	10×3/4	—	10×3/4	12×3/4	—	12×1 1/4						
	6	70-11 11/16		16-6	—	37-11 11/16	1 1/8	10×3/4	—	10×3/4	12×3/4	—	12×1 1/4						
	7	70-3 3/16		16-6	—	37-3 3/16	1 1/8	10×3/4	—	10×3/4	12×3/4	—	12×1 1/4						
W16	8	69-6 3/4		20-0	—	29-6 3/4	3/4	10×3/4	—	10×3/4	12×3/4	—	12×7/8	6×1/2		24@6"	22@8"	8@12"	4"
W17	1	83-11 7/16		16-6	8-0	34-11 7/16	1 5/8	10×3/4	10×3/4	10×3/4	12×3/4	12×1 1/8	12×1 3/8	5×7/16		30@6"	20@8"	9@12"	5"
	2	83-2 5/16		15-9	11-6	28-8 5/16	1 5/8	10×3/4	10×3/4	10×3/4	12×3/4	12×1 1/4	12×1 1/2			30@6"	20@8"	9@12"	4"
	[3]	82-5 7/16		15-9	11-6	27-11 7/16	1 5/8	10×3/4	10×3/4	10×3/4	12×3/4	12×1 1/4	12×1 1/2			30@6"	20@8"	9@12"	
	4	82-5 7/16		14-0	12-0	30-5 7/16	1 5/8	10×3/4	10×3/4	10×3/4	12×3/4	12×1 3/8	12×1 3/4			35@5"	23@8"	10@12"	
	5	82-5 7/16		14-0	12-0	30-5 7/16	1 5/8	10×3/4	10×3/4	10×3/4	12×3/4	12×1 3/8	12×1 3/4	5×7/16		35@5"	23@8"	10@12"	
W17	6	82-5 7/16		16-6	10-3	28-11 7/16	1 1/2	10×3/4	10×3/4	10×3/4	14×3/4	14×1 1/8	14×1 3/8	6×1/2		35@5"	23@8"	10@12"	4"
W18	1	93-10 1/2		18-0	9-0	39-10 1/2	2 1/8	10×3/4	10×3/4	10×1	14×3/4	14×1 1/8	14×1 1/2			17@7"	29@8"	11@12"	5"
	2	92-0 3/16		15-0	13-6	35-0 3/16	2 3/8	10×3/4	10×3/4	10×7/8	14×3/4	14×1 1/4	14×1 5/8			17@7"	29@8"	11@12"	4"
	[3]	90-2 3/16		14-6	15-6	30-2 3/16	2	10×3/4	10×3/4	10×7/8	14×3/4	14×1 3/8	14×1 5/8			26@6"	27@8"	10@12"	
	4	90-2 3/16		13-6	13-6	36-2 3/16	2 1/8	10×3/4	10×3/4	10×1	14×3/4	14×1 3/8	14×1 3/4			35@6"	23@8"	10@12"	
	5	90-2 3/16		13-6	13-6	36-2 3/16	2 1/8	10×3/4	10×3/4	10×1	14×3/4	14×1 3/8	14×1 3/4			35@6"	23@8"	10@12"	
W18	6	90-2 3/16		13-6	15-0	33-2 3/16	2 3/8	10×3/4	10×3/4	10×1	14×3/4	14×1 3/8	14×1 5/8	6×1/2		35@6"	23@8"	10@12"	
W19	1	71-6 3/4		19-0	—	33-6 3/4	1	10×3/4	—	10×3/4	12×3/4	—	12×1 1/8	5×7/16		20@6"	21@8"	7@12"	
	2	69-0 15/16		21-3	—	26-6 15/16	3/4	10×3/4	—	10×3/4	12×3/4	—	12×7/8			20@6"	21@8"	7@12"	
	[3]	66-8		21-3	—	24-2	3/4	10×3/4	—	10×3/4	12×3/4	—	12×7/8			20@6"	21@8"	7@12"	
	4	66-8		17-3	—	32-2	3/4	10×3/4	—	10×3/4	12×3/4	—	12×1			26@6"	19@8"	6@12"	
	5	66-8		17-3	—	32-2	3/4	10×3/4	—	10×3/4	12×3/4	—	12×1			26@6"	19@8"	6@12"	
W19	6	66-8		20-0	—	26-8	3/4	10×3/4	—	10×3/4	12×3/4	—	12×7/8	5×7/16		26@6"	19@8"	6@12"	
W20	1	92-7 11/16		13-0	8-6	49-7 11/16	1 7/8	10×3/4	10×3/4	10×7/8	14×3/4	14×1 1/8	14×1 3/8	6×1/2		36@6"	22@8"	10@12"	
	2	89-9 13/16		14-6	15-6	29-9 13/16	2	10×3/4	10×3/4	10×7/8	14×3/4	14×1 3/8	14×1 3/8			26@6"	27@8"		
	[3]	87-0 3/8		16-0	11-6	32-0 3/8	2	10×3/4	10×3/4	10×3/4	14×3/4	14×1 1/4	14×1 1/2			32@6"	21@8"		
	4	84-3 1/2		16-0	11-6	29-3 1/2	2	10×3/4	10×3/4	10×3/4	14×3/4	14×1 1/4	14×1 1/2	6×1/2		32@6"	21@8"	10@12"	
	5	81-7 3/8		15-9	11-6	27-1 3/16	1 5/8	10×3/4	10×3/4	10×3/4	12×3/4	12×1 1/4	12×1 1/2	5×7/16		30@6"	20@8"	9@12"	
W20	6	81-7 3/16		16-6	8-0	32-7 3/16	1 1/2	10×3/4	10×3/4	10×3/4	12×3/4	12×1 1/8	12×1 3/8	5×7/16		30@6"	20@8"	9@12"	
W21	1	48-3 1/16		—	—	48-3 1/16	1/4	—	—	10×3/4	—	—	10×3/4	4×7/16		10@7"	10@8"	10@12"	
	[2]	58-6 3/8		—	—	58-6 3/8	1/2	—	—	10×3/4	—	—	10×3/4	4×7/16		10@7"	20@8"	7@12"	
	3	73-5 3/4		16-6	—	40-5 1/2	1 1/8	10×3/4	—	10×3/4	12×3/4	—	12×1 1/4	5×7/16		24@6"	22@8"	8@12"	
	4	88-5 1/2		14-6	15-6	28-5 1/2	2 1/16	10×3/4	10×3/4	10×7/8	14×3/4	14×1 1/8	14×1 3/8	6×1/2	4×3/8	26@6"	27@8"	10@12"	4"
	5	103-4 1/2		13-0	10-6	56-4 1/2	2 3/4	12×3/4	12×3/4	12×1 5/8	16×3/4	16×1 1/4	16×1 3/8	7×5/8	5×3/8	40@6"	20@8"	12@12"	5"
W21	6S	116-5 7/8	54×3/8	12-0	11-3	69-11 3/8	1 3/4	14×3/4	14×1 1/2	20×2	20×7/8	20×1 5/8	20×2 3/8	9×3/4	6×3/8	40@6"	20@8"	12@12"	4"
W22	†[1]	93-5 1/2	48×3/8	14-0	15-0	35-5 1/2	2 5/8	12×3/4	12×3/4	12×1	16×3/4	16×1 3/8	16×1 3/8	7×5/8	5×3/8	30@6"	26@8"	12@12"	
	†2	93-5 1/2		14-0	14-0	37-5 1/2	2 3/4	12×3/4	12×3/4	12×1	16×3/4	16×1 1/2	16×1 3/4						
	†3	93-5 1/2		14-0	14-0	37-5 1/2	2 3/4	12×3/4	12×3/4	12×1	16×3/4	16×1 1/2	16×1 3/4						
	†4	93-5 1/2		14-0	14-0	37-5 1/2	2 3/4	12×3/4	12×3/4	12×1	16×3/4	16×1 1/2	16×1 3/4			30@6"	26@8"	12@12"	
	†5	93-5 1/2		15-0	14-6	34-5 1/2	2 3/4	12×3/4	12×3/4	12×1	16×3/4	16×1 3/8	16×1 3/8			31@6"	24@8"	12@12"	
W22	†6	93-5 1/2	48×3/8	14-0	9-0	47-5 1/2	2 3/4	12×3/4	12×3/4	12×1 1/8	16×3/4	16×1 1/8	16×1 3/8	7×5/8	5×3/8	31@6"	24@8"	11@12"	4"

SPAN	GIRDER	D.L. DEFLECTION & V.C. ORDINATES @1/4 & 3/4 L D.L.	V.C.	@1/2 L D.L.	V.C.	℄ BEARING AT REAR PIER EL."R"	α	BEARING TYPE	END DIAPHRAGM CONNECTION TYPE	DIM. T	℄ BEARING AT FORWARD PIER EL."F"	β	BEARING TYPE	END DIAPHRAGM CONNECTION TYPE	DIM. T	GIRDER
W13	†1	1/16	—	1/2	—	41.049	85°29'36"	E12	4	9"	40.807	102°11'36"	B2	5	9"	1
	†2	3/8"	—	9/16	—	41.368	84°20'40"				41.218	101°02'40"				2
	†[3]	7/16	—	5/8	—	41.684	83°16'15"				41.634	99°58'15"				[3]
	†4	7/16	—	11/16	—	41.979	83°16'15"				42.097	99°58'15"				4
	†5	11/16	—	15/16	—	42.272	83°16'15"				42.566	99°58'15"				5
	†6	5/8	—	7/8	—	42.563	83°16'15"				43.039	99°58'15"				6
	†7	11/16	—	1"	—	42.851	83°16'15"				43.517	99°58'15"				7
W13	†8	7/8	—	1 1/4	—	43.137	83°16'15"	E12	4	9"	43.995	99°58'15"	B2		9"	8
W14	1S	1 1/4"	—	1 3/4	—	40.621	91°34'37"	R1	5	11 3/8"	41.185	90°20'01"	B1		11 3/8"	1S
	2	1 15/16	—	2 3/4	—	41.054	91°34'37"			11 3/8"	41.629	90°20'01"			11 3/8"	2
	[3]	1 15/16	—	2 3/4	—	41.512	90°38'33"				41.980	89°23'57"				[3]
	4	1 15/16	—	2 3/4	—	41.976	90°38'33"				42.446	89°23'57"				[4]
	5	1 15/16	—	2 3/4	—	42.445	90°38'33"				42.912	89°23'57"				5
	6	1 15/16	—	2 3/4	—	42.918	90°38'33"				43.378	89°23'57"				6
	7	1 15/16	—	2 3/4	—	43.391	90°38'33"			11 3/8"	43.845	89°23'57"			11 3/8"	7
W14	8S	1 3/8"	—	1 15/16	—	43.938	90°38'33"	R1		9 3/4"	44.386	89°23'57"	B1		9 3/4"	8S
W15	1S	1 1/4"	—	1 3/4	—	41.202	77°54'50"	R1		11"	41.789	82°24'15"	B1		11"	1S
	2	1 15/16	—	2 3/4	—	41.636	77°54'50"			11 3/8"	42.202	82°24'15"			11 3/8"	2
	[3]	1 15/16	—	2 3/4	—	42.007	78°40'12"				42.646	83°09'37"				[3]
	4	1 15/16	—	2 3/4	—	42.472	78°40'12"				43.090	83°09'37"				4
	5	1 15/16	—	2 3/4	—	42.938	78°40'12"				43.536	83°09'37"				5
	6	1 15/16	—	2 3/4	—	43.403	78°40'12"				43.881	83°09'37"				6
	7	1 15/16	—	2 3/4	—	43.869	78°40'12"			11 3/8"	44.212	83°09'37"			11 3/8"	7
W15	8S	1 3/8"	3/16	1 15/16	1/4"	44.380	78°40'12"	R1		9 7/8"	44.621	83°09'37"	B1	5	9 7/8"	8S
W16	1	11/16	—	1"	—	41.882	72°12'48"	R2		10"	42.248	67°43'23"	F12	3	10"	1
	2	5/8"	—	15/16	—	42.311	73°40'16"			9 1/4"	42.757	69°10'51"			9 1/4"	2
	3	5/8"	—	15/16	—	42.677	75°10'46"				43.206	70°41'21"				3
	[4]	5/8"	—	7/8"	—	43.044	76°44'19"				43.657	72°14'54"				[4]
	5	5/8"	—	7/8"	—	43.529	76°44'19"				44.111	72°14'54"				5
	6	5/8"	—	7/8"	—	43.955	76°44'19"				44.269	72°14'54"				6
	7	5/8"	—	7/8"	—	44.306	76°44'19"			9 1/4"	44.417	72°14'54"			9 1/4"	7
W16	8	1/2"	—	11/16	—	44.692	76°44'19"	R2	5	9"	44.586	72°14'54"	F12	3	9"	8
W17	1	7/8	—	1 1/4"	—	42.256	59°43'33"	E12	1	10"	42.477	59°43'33"	F12	1	10"	1
	2	1"	—	1 3/8"	—	42.697	60°38'18"			9 1/2"	42.977	60°38'18"			9 1/2"	2
	[3]	1"	—	1 3/8"	—	43.099	61°34'03"				43.438	61°34'03"				[3]
	4	15/16"	—	1 5/16"	—	43.571	61°34'03"				43.890	61°34'03"				[4]
	5	15/16"	—	1 5/16"	—	44.045	61°34'03"	E12		9 1/2"	44.342	61°34'03"	F12		9 1/2"	5
W17	6	1"	3/16"	1 7/16"	1/4"	44.243	61°34'03"	E14		9 3/4"	44.603	61°34'03"	F14		9 3/4"	6
W18	1	1 3/16"	—	1 5/8"	—	42.475	50°33'33"	E14		10"	42.093	50°33'33"	F14		10"	1
	2	1 5/16"	—	1 7/8"	—	42.861	51°59'19"			9 3/4"	42.611	51°59'19"			9 3/4"	2
	[3]	1 3/16"	—	1 5/8"	—	43.228	53°28'35"				43.109	53°28'35"				[3]
	4	1 3/16"	—	1 11/16"	—	43.743	53°28'35"				43.609	53°28'35"				[4]
	5	1 3/16"	—	1 11/16"	—	44.259	53°28'35"			9 3/4"	44.110	53°28'35"			9 3/4"	5
W18	6	1 1/4"	1/8"	1 13/16"	3/16"	44.667	53°28'35"	E14	1	9"	44.503	53°28'35"	F14	1	9"	6
W19	1	9/16"	—	13/16"	—	42.098	41°56'38"	E12	2	9 3/4"	41.353	41°56'38"	F12	2	9 3/4"	1
	2	7/16"	—	5/8"	—	42.541	43°49'33"			9 1/4"	41.949	43°49'33"			9 1/4"	2
	[3]	7/16"	—	5/8"	—	42.943	45°50'45"				42.503	45°50'45"				[3]
	4	1/2"	—	11/16"	—	43.510	45°50'45"				43.060	45°50'45"				[4]
	5	1/2"	—	11/16"	—	44.077	45°50'45"			9 1/4"	43.616	45°50'45"			9 1/4"	5
W19	6	1/2"	1/16"	11/16"	1/16"	44.493	45°50'45"	E12		9"	44.021	45°50'45"	F12		9"	6
W20	1	1"	—	1 1/16"	—	41.317	33°10'52"	E14		9 3/4"	39.748	33°10'52"	F14		9 3/4"	1
	2	1 3/16"	—	1 5/8"	—	41.876	34°22'04"				40.454	34°22'04"				2
	[3]	1 1/8"	—	1 5/8"	—	42.435	35°37'53"				41.158	35°37'53"				[3]
	4	1 1/8"	—	1 5/8"	—	42.993	36°58'39"	E14			41.861	36°58'39"	F14			4
	5	1"	—	1 3/8"	—	43.552	38°24'49"	E12		9 3/4"	42.564	38°24'49"	F12		9 3/4"	5
W20	6	15/16"	1/16"	1 1/4"	1/8"	43.999	38°24'49"	E12		9"	43.005	38°24'49"	F12	2	9"	6
W21	1	1/8"	—	3/16"	—	39.751	25°59'52"	E10		9"	38.682	92°38'55"	F	—	9"	1
	[2]	1/4"	—	3/8"	—	40.251	29°04'04"	E10		9"	39.149	95°43'07"		—	9"	[2]
	3	5/8"	—	7/8"	—	40.973	29°04'04"	E12		9 1/4"	39.595	95°43'07"		—	9 1/4"	3
	4	1"	—	1 5/8"	—	41.694	29°04'04"	E14		9 1/2"	40.040	95°43'07"		—	9 1/2"	[4]
	5	1 1/2"	—	2 1/8"	—	42.394	29°04'04"	E16		10"	40.466	95°43'07"		—	10"	5
W21	6S	1 5/16"	1 3/16"	1 7/8"	1 1/16"	42.900	29°04'04"	E20	2	9 3/4"	40.722	95°43'07"	F	—	9 3/4"	6S
W22	†[1]	1 1/16"	—	2"	—	38.601	85°20'20"	E16a	6		36.338	85°20'20"	F16	—		[1]
	†2	1 9/16"	—	2 3/16"	—	39.066	85°20'20"				36.829	85°20'20"				2
	†3	1 9/16"	—	2 3/16"	—	39.534	85°20'20"				37.321	85°20'20"				[3]
	†4	1 9/16"	—	2 3/16"	—	39.999	85°20'20"				37.811	85°20'20"				4
	†5	1 1/2"	—	2 1/8"	—	40.468	85°20'20"			9 3/4"	38.301	85°20'20"			9 3/4"	5
W22	†6	1 1/2"	—	2 1/8"	—	40.767	85°20'20"	E16a	6	9"	38.627	85°20'20"	F16	4	9"	6

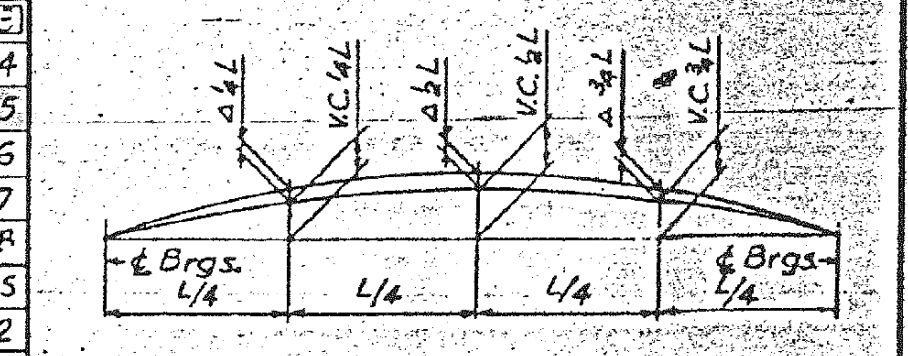

DEAD LOAD DEFLECTION DIAGRAM

Dead Load Deflections shown in the Girder Schedules include weight of concrete only. They shall not be used in the field if the Engineer is working from the Theoretical Grade Elevations adjusted for Dead Load Deflections.

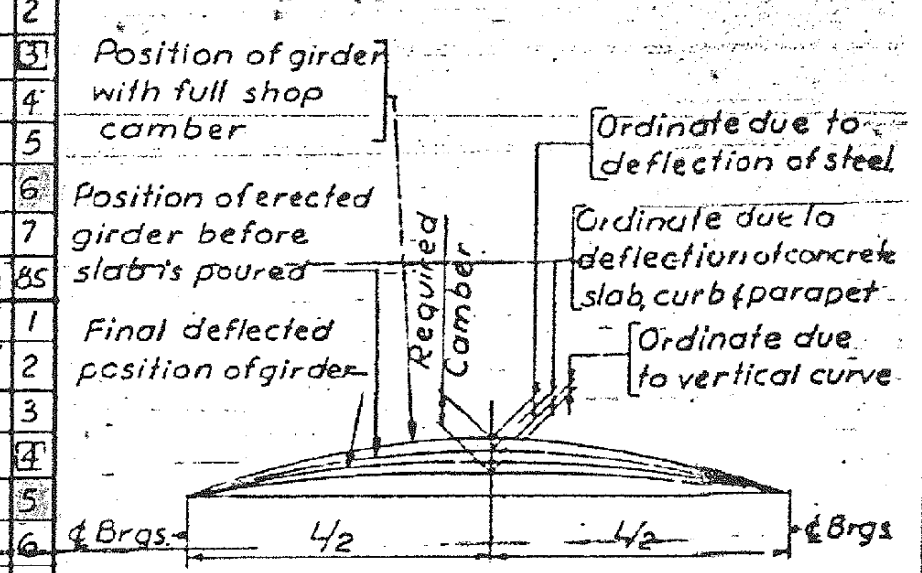

CAMBER DIAGRAM

NOTES:
- "†" indicates stepped bottom flange at Rear Pier Bearings.
- "‡" indicates stepped top and bottom flange at Rear Pier Bearings.
- "F" indicates framed connection to steel pier.
- "*" use shorter stud height on Top Flange Plate C and 6" height on Plates A and B.
- "□" Set all bearing devices of a given span in the direction of the girder indicated (i.e., all bearings in Span W13 shall be parallel to Girder No. 3). See Anchor Bolt Setting Diagrams, Sheets S8 through S29.

CITY OF CHICAGO
DEPARTMENT OF PUBLIC WORKS
BUREAU OF ENGINEERING
SOUTHWEST ROUTE SUPERHIGHWAY
ELEVATED HIGHWAY
S. LAKE PARK AVE. TO S. LAKE SHORE DRIVE
SECTION SW-1818.3-2H
GIRDER SCHEDULE—S-W ROADWAY
SCALE: AS NOTED DEC. 1964
SHEET NO. S-46 OF 99 SHEETS

FOR INFORMATION ONLY

SPAN	GIRDER	L	WEB PL.	GIRDER DIMENSIONS A	B	C	CAMBER	TOP FLANGE PLATES A	B	C	BOTTOM FLANGE PLTS. A	B	C	STIFFENERS BRG.	INT.	SHEAR CONNECTOR SPACING a	b	c	STUD HEIGHT H	D.L. DEFLECTION & V.C. ORDINATES @ 1/4 & 3/4 L D.L.	V.C.	@ 1/2 L D.L.	V.C.	℄ BEARING AT REAR PIER EL. "R"	α	BEARING TYPE	END DIAPHRAGM CONNECTION TYPE	DIM. T	℄ BEARING AT FORWARD PIER EL. "F"	β	BEARING TYPE	END DIAPHRAGM CONNECTION TYPE	DIM. T	GIRDER
E13	† 1	73-0 1/16	54"×3/8	19-0	—	35-0 1/16	3/4"	10×3/4	—	10×3/4	12×3/4	—	12×1 1/8	6×1/2	4×3/8	32@6"	17@8"	8@12"	4"	5/8"	3/16"	13/16"	1/4	41.704	89°59'27"	E12	4	9"	41.681	106°41'27"	B2	5	9"	1
	† 2	75-8 3/8		16-6	9-0	24-8 3/8	1"	10×3/4	10×3/4	10×3/4	12×3/4	12×1 1/8	12×1 3/8			32@6"	17@8"	8@12"		11/16"	1/4"	1"	5/16"	41.979	91°06'16"			8 1/2"	41.997	107°48'16"			8 1/2"	2
	† [3]	78-5		15-9	11-6	23-11	1 3/8	10×3/4	10×3/4	10×3/4	12×3/4	12×1 1/4	12×1 1/2			30@6"	20@8"	9@12"		1"	1/4"	1 3/8"	5/16"	42.104	92°08'33"				42.101	108°50'33"				[3]
	† 4	81-1 9/16		14-0	12-0	29-1 3/16	1 3/8	10×3/4	10×3/4	10×3/4	12×3/4	12×1 3/8	12×1 3/4			35@5"	23@8"	10@12"		15/16"	1/4"	1 5/16"	5/16"	42.153	92°08'33"	E12			42.086	108°50'33"				4
	† 5	83-9 3/8		15-6	10-6	31-9 3/8	1 3/8	10×3/4	10×3/4	10×3/4	14×3/4	14×1 1/4	14×1 1/2			31@6	24@8"	10@12"		1 1/16"	5/16"	1 1/2"	7/16"	42.064	92°08'33"	E14			41.972	108°50'33"				5
	† 6	86-5 5/8		13-6	13-6	32-5 5/8	1 3/4	10×3/4	10×3/4	10×1	14×3/4	14×1 3/8	14×1 3/4			35@6"	23@8"	9@12"		1 1/4"	1/4"	1 11/16"	3/8"	41.900	92°08'33"				41.788	108°50'33"				6
	† 7	89-1 13/16		13-0	8-6	46-1 13/16	1 1/2	10×3/4	10×3/4	10×7/8	14×3/4	14×1 1/8	14×1 5/8			36@6"	22@8"	10@12"		1"	5/16"	1 7/16"	3/8"	41.723	92°08'33"				41.604	108°50'33"				7
	† 8	89-11 7/16		18-0	11-0	31-11 7/16	1 3/8	10×3/4	10×3/4	10×3/4	14×3/4	14×1 3/8	14×1 3/8			36@6"	22@8"	10@12"		7/8"	5/16"	1 1/4"	3/8"	41.645	91°21'35"				41.551	108°03'35"				8
	† 9	92-5 3/8		15-0	13-6	35-5 3/8	2	10×3/4	10×3/4	10×7/8	14×3/4	14×1 1/4	14×1 5/8			17@7"	29@8"	11@12"		1 5/16"	5/16"	1 13/16"	7/16"	41.526	92°38'19"				41.383	109°20'19"				9
	† 10	94-11 13/16		15-0	13-6	37-11 13/16	2	10×3/4	10×3/4	10×7/8	14×3/4	14×1 1/4	14×1 5/8	6×1/2	4×3/8	17@7"	29@8"	11@12"		1 5/16"	5/16"	1 13/16"	7/16"	41.407	93°51'02"	E14		8 1/2"	41.214	110°33'02"			8 1/2"	10
E13	† 11	97-6 3/4		16-6	15-0	34-6 3/4	2 5/8	12×3/4	12×3/4	12×7/8	16×3/4	16×1 1/4	16×1 1/2	7×5/8	5×3/8	17@7"	29@8"	11@12"		1 3/8"	3/8"	1 15/16"	1/2"	41.246	94°59'59"	E16	4	9"	41.003	111°41'59"	B2		9"	11
E14	1	122-9 1/16	—	14-6	18-6	56-9 1/16	3 3/8	14×3/4	14×1 1/8	14×1 5/8	18×3/4	18×1 1/2	18×2	8×3/4	6×3/8	25@6	36@8	12@12"		2"	1/2"	2 13/16"	11/16"	41.678	106°42'19"	R1	5	9"	41.240	105°27'44"	B1		9"	1
	[2]	123-3 7/8		17-0	19-0	51-3 7/8	3 1/8	14×3/4	14×1 3/8	14×1 3/4	20×7/8	20×1 3/8	20×2	9×3/4		25@6"	36@8"	12@12"		1 15/16"	9/16"	2 3/4"	3/4"	41.829	107°50'15"			9 1/4"	41.4581	106°35'39"			9 1/4"	[2]
	3	123-1 9/16		16-6	20-0	50-1 9/16	3 3/4	14×3/4	14×1 1/2	14×1 7/8	20×7/8	20×1 3/4	20×2 1/8			34@6"	30@8"	9@12"		2 1/4"	1/2"	3 3/16"	11/16"	41.995	107°50'15"				41.565	106°35'39"				3
	4	122-11 5/16		16-6	20-0	49-11 5/16	3 3/4	14×3/4	14×1 1/2	14×1 7/8	20×7/8	20×1 3/4	20×2 1/8							2 1/4"	1/2"	3 3/16"	11/16"	42.011	107°50'15"				41.597	106°35'39"				4
	5	122-9 1/16		16-6	20-0	49-9 1/16	4	14×3/4	14×1 1/2	14×1 7/8	20×7/8	20×1 3/4	20×2 1/8							2 1/4"	5/16"	3 3/8"	7/16"	41.990	107°50'15"				41.540	106°35'39"				5
	6	122-6 3/4		16-6	20-0	49-6 3/4	4 3/8	14×3/4	14×1 1/2	14×1 7/8	20×7/8	20×1 3/4	20×2 1/8						4"	2 1/4"	—	3 3/16"	—	41.867	107°50'15"			9 1/4"	41.483	106°35'39"			9 1/4"	6
	7	122-4 1/2		16-6	20-0	49-4 1/2	4 3/8	14×3/4	14×1 1/2	14×1 7/8	20×7/8	20×1 3/4	20×2 1/8	9×3/4					5"	2 1/4"	—	3 3/16"	—	41.619	107°50'15"			10 1/4"	41.355	106°35'39"			10 1/4"	7
E14	8	122-2 1/4		12-6	14-6	68-2 1/4	4	14×3/4	14×1 1/8	14×1 7/8	18×3/4	18×1 1/2	18×2 1/4	8×3/4	6×3/8	34@6"	30@8"	9@12"	5"	2 1/16"	—	2 7/8"	—	41.496	107°50'15"	R1		9 3/4"	41.366	106°35'39"	B1	5	9 3/4"	8
E15	1	88-1 15/16		13-0	8-6	45-1 15/16	1 3/8	10×3/4	10×3/4	10×7/8	14×3/4	14×1 1/8	14×1 3/8	6×1/2	4×3/8	36@6"	22@8"	10@12"	4"	1"	7/16"	1 7/16"	9/16"	41.232	106°05'42"	R2		9"	40.722	106°05'42"	F14	3	9"	1
	[2]	87-9 11/16		16-0	11-6	32-9 11/16	1 3/8	10×3/4	10×3/4	10×3/4	14×3/4	14×1 1/4	14×1 1/2			32@6"	21@8"			1 1/8"	7/16"	1 5/8"	5/8"	41.514	105°16'16"			8 1/2"	40.961	105°16'16"			8 1/2"	[2]
	3	87-9 11/16		14-6	15-6	27-9 11/16	1 3/4	10×3/4	10×3/4	10×7/8	14×3/4	14×1 3/8	14×1 5/8							1 1/8"	1/4"	1 5/8"	5/8"	41.620	105°16'16"				41.125	105°16'16"				3
	4	87-9 11/16		14-6	15-6	27-9 11/16	2	10×3/4	10×3/4	10×7/8	14×3/4	14×1 3/8	14×1 5/8							1 1/8"	—	1 5/8"	—	41.653	105°16'16"				41.281	105°16'16"				4
	5	87-9 11/16		14-6	15-6	27-9 11/16	2	10×3/4	10×3/4	10×7/8	14×3/4	14×1 3/8	14×1 5/8							1 1/8"	—	1 5/8"	—	41.600	105°16'16"				41.447	105°16'16"				5
	6	87-9 11/16		14-6	15-6	27-9 11/16	2	10×3/4	10×3/4	10×7/8	14×3/4	14×1 3/8	14×1 5/8							1 1/8"	—	1 5/8"	—	41.548	105°16'16"				41.623	105°16'16"				6
	7	87-9 11/16		14-6	15-6	27-9 11/16	2	10×3/4	10×3/4	10×7/8	14×3/4	14×1 3/8	14×1 5/8							1 1/8"	—	1 5/8"	1/16"	41.508	105°16'16"			8 1/2"	41.810	105°16'16"			8 1/2"	7
E15	8	87-9 11/16		18-0	11-6	28-9 11/16	1 3/4	10×3/4	10×3/4	10×3/4	14×3/4	14×1 1/8	14×1 3/8	6×1/2	4×3/8	32@6"	21@8"			1"	1/16"	1 7/16"	1/8"	41.441	105°16'16"	R2	5	9"	41.964	105°16'16"	F14	3	9"	8
E16	φ 1	104-10 7/8		16-6	10-6	50-10 7/8	2 7/8	12×3/4	12×3/4	12×1 1/8	16×3/4	16×1 1/8	16×1 5/8	7×5/8	5×3/8	6@7"	37@8"			1 1/2"	—	2 3/16"	—	40.666	103°55'40"	E16	4	9 1/2"	39.785	103°55'40"	F16	4	9 1/2"	1
	φ 2	104-3		18-3	13-0	41-9	3	12×3/4	12×3/4	12×1	16×3/4	16×1 1/4	16×1 5/8			6@7"	37@8"			1 5/8"	—	2 5/16"	—	40.915	102°22'55"			9 1/4"	40.071	102°22'55"			9 1/4"	2
	φ 3	103-8		18-3	13-0	41-2	3	12×3/4	12×3/4	12×1	16×3/4	16×1 1/4	16×1 5/8			6@7"	37@8"	10@12"		1 5/8"	—	2 5/16"	—	41.068	100°49'04"				40.338	100°49'04"				3
	φ [4]	103-1 15/16		14-6	12-0	50-1 15/16	2 3/4	12×3/4	12×3/4	12×1 1/8	16×3/4	16×1 1/4	16×1 3/4			21@6"	32@8"	12@12"		1 1/2"	—	2 1/8"	—	41.225	99°14'13"				40.607	99°14'13"				[4]
	φ 5	103-1 15/16		13-0	10-6	56-1 15/16	2 3/4	12×3/4	12×3/4	12×1 1/4	16×3/4	16×1 1/4	16×1 7/8			40@6"	29@8"	12@12"		1 1/2"	—	2 1/8"	—	41.392	99°14'13"				41.032	99°14'13"				5
	φ 6	103-1 15/16		13-0	10-6	56-1 15/16	2 3/4	12×3/4	12×3/4	12×1 1/4	16×3/4	16×1 1/4	16×1 7/8			40@6"	29@8"	12@12"		1 1/2"	—	2 1/8"	—	41.569	99°14'13"				41.463	99°14'13"				6
	φ 7	103-1 15/16		13-0	10-6	56-1 15/16	2 3/4	12×3/4	12×3/4	12×1 1/4	16×3/4	16×1 1/4	16×1 7/8			40@6"	29@8"	12@12"		1 1/2"	—	2 1/8"	—	41.755	99°14'13"				41.849	99°14'13"				7
E16	φ 8	103-1 15/16	54"×3/8	12-6	16-6	45-1 15/16	2 3/4	12×3/4	12×1	12×1 3/8	16×3/4	16×1 1/2	16×1 7/8	7×5/8	5×3/8	40@6"	29@8"	12@12"		1 9/16"	3/16"	2 1/4"	1/4"	41.950	99°14'13"	E16		9 1/4"	42.102	99°14'13"	F16		9 1/4"	8
E17	1	72-7 13/16	48"×3/8	19-0	—	34-7 13/16	1 1/4	10×3/4	—	10×3/4	12×3/4	—	12×1 1/8	6×1/2	4×3/8	24@6"	20@8"	8@12"		13/16"	—	1 1/8"	—	39.771	93°42'32"	E12		9 1/2"	39.222	93°42'32"	F12		9 1/2"	1
	2	72-6 3/4		16-6	—	39-6 3/4	1 1/4	10×3/4	—	10×3/4	12×3/4	—	12×1 1/4			24@6"	20@8"	8@12"		3/4"	—	1"	—	40.204	92°24'38"			9 1/4"	39.618	92°24'38"			9 1/4"	2
	[3]	72-6 3/16		15-6	9-0	23-6 3/16	1 1/4	10×3/4	10×3/4	10×3/4	12×3/4	12×1 1/8	12×1 3/8			31@6"	17@8"	8@12"		3/4"	—	1 1/16"	—	40.621	91°06'36"				39.992	91°06'36"				[3]
	4	72-6 3/16		14-0	8-0	28-6 3/16	1 1/4	10×3/4	10×3/4	10×3/4	12×3/4	12×1 1/8	12×1 3/8			35@5"	20@8"	7@12"		3/4"	—	1 1/16"	—	41.044	91°06'36"				40.463	91°06'36"				4
	5	72-6 3/16		14-0	8-0	28-6 3/16	7/8	10×3/4	10×3/4	10×3/4	12×3/4	12×1 1/8	12×1 3/8			35@5"	20@8"	7@12"		3/4"	1/4"	1 1/16"	3/8	41.472	91°06'36"				40.935	91°06'36"				5
	6	72-6 3/16		14-0	8-0	28-6 3/16	1	10×3/4	10×3/4	10×3/4	12×3/4	12×1 1/8	12×1 3/8			35@5"	20@8"	7@12"		3/4"	1/4"	1 1/16"	5/16	41.852	91°06'36"			9 1/4"	41.356	91°06'36"			9 1/4"	6
E17	7	72-6 3/16		15-6	—	41-6 3/16	1 3/8	10×3/4	—	10×3/4	12×3/4	—	12×1 3/8			35@5"	20@8"	7@12"		13/16"	—	1 1/8"	—	42.122	91°06'36"	E12		9"	41.627	91°06'36"	F12		9"	7
E18	1	72-7 3/8		19-0	—	34-7 3/8	1 1/4	10×3/4	—	10×3/4	12×3/4	—	12×1 1/8			24@6"	20@8"	8@12"		13/16"	—	1 1/8"	—	39.211	86°46'48"	E12		9 1/2"	38.585	86°46'48"	F12		9 1/2"	1
	2	72-8 1/4		16-6	—	39-8 1/4	1 1/4	10×3/4	—	10×3/4	12×3/4	—	12×1 1/4			24@6"	20@8"			3/4"	—	1"	—	39.674	85°52'49"			9 1/4"	38.985	85°52'49"			9 1/4"	2
	[3]	72-9 3/8		16-6	—	39-9 3/8	1 1/4	10×3/4	—	10×3/4	12×3/4	—	12×1 1/4			24@6"	20@8"			3/4"	—	1"	—	40.115	84°58'58"				39.365	84°58'58"				[3]
	4	72-9 3/8		15-6	9-0	23-9 3/8	1 1/4	10×3/4	10×3/4	10×3/4	12×3/4	12×1 1/8	12×1 3/8			31@6"	17@8"			3/4"	—	1 1/16"	—	40.552	84°58'58"				39.808	84°58'58"				4
	5	72-9 3/8		15-6	9-0	23-9 3/8	1 1/4	10×3/4	10×3/4	10×3/4	12×3/4	12×1 1/8	12×1 3/8			31@6"	17@8"			3/4"	—	1 1/16"	—	40.990	84°58'58"				40.251	84°58'58"				5
	6	72-9 3/8		15-6	9-0	23-9 3/8	1 1/4	10×3/4	10×3/4	10×3/4	12×3/4	12×1 1/8	12×1 3/8			31@6"	17@8"			3/4"	—	1 1/16"	—	41.362	84°58'58"			9 1/4"	40.628	84°58'58"			9 1/4"	6
E18	7	72-9 3/8		16-6	—	39-9 3/8	1 3/8	10×3/4	—	10×3/4	12×3/4	—	12×1 1/4			31@6"	17@8"	8@12"		13/16"	—	1 3/16"	—	41.613	84°58'58"	E12		9"	40.887	84°58'58"	F12		9"	7
E19	1	73-9 3/8		15-6	—	42-9 3/8	1 1/4	10×3/4	—	10×3/4	12×3/4	—	12×1 3/8			40@5"	21@8"	5@12"		3/4"	—	1 1/16"	—	38.570	79°18'21"	E12		9 1/2"	37.702	79°18'21"	F12		9 1/2"	1
	[2]	73-10 9/16		11-6	10-6	29-10 9/16	1 3/8	10×3/4	10×3/4	10×3/4	12×3/4	12×1 1/4	12×1 5/8							3/4"	—	1 1/16"	—	39.089	78°54'07"			9 1/4"	38.194	78°54'07"			9 1/4"	[2]
	3	73-10 9/16		11-6	10-6	29-10 9/16	1 3/8	10×3/4	10×3/4	10×3/4	12×3/4	12×1 1/4	12×1 5/8							3/4"	—	1 1/16"	—	39.597	78°54'07"				38.708	78°54'07"				3
	4	73-10 9/16		11-6	10-6	29-10 9/16	1 3/8	10×3/4	10×3/4	10×3/4	12×3/4	12×1 1/4	12×1 5/8							3/4"	—	1 1/16"	—	40.105	78°54'07"				39.221	78°54'07"				4
	5	73-10 9/16		11-6	10-6	29-10 9/16	1 3/8	10×3/4	10×3/4	10×3/4	12×3/4	12×1 1/4	12×1 5/8							3/4"	—	1 1/16"	—	40.575	78°54'07"			9 1/4"	39.677	78°54'07"			9 1/4"	5
E19	6	73-10 9/16		12-6	12-0	24-10 9/16	1 3/8	10×3/4	10×3/4	10×3/4	12×3/4	12×1 1/4	12×1 1/2				21@8"	5@12"		13/16"	—	1 1/8"	—	40.871	78°54'07"	E12	4	9"	39.982	78°54'07"	F12	4	9"	6
E20	1	80-3 1/16		16-6	9-6	28-3 1/16	1 5/8	10×3/4	10×3/4	10×3/4	14×3/4	14×1 1/8	14×1 3/8	6×1/2			23@8"	8@12"		15/16"	—	1 5/16"	—	37.723	71°16'58"	E14	3	9"	36.501	71°16'58"	F14	3	9"	1
	[2]	80-0 3/4		11-0	15-0	28-0 3/4	1 3/4	10×3/4	10×3/4	10×3/4	12×3/4	12×1 1/2	12×1 7/8	5×7/16						1"	—	1 1/16"	—	38.173	71°41'52"	E12		9 1/4"	36.992	71°41'52"	F12		9 1/4"	[2]
	3	80-0 3/4		11-0	15-0	28-0 3/4	1 3/4	10×3/4	10×3/4	10×3/4	12×3/4	12×1 1/2	12×1 7/8							1"	—	1 1/16"	—	38.687	71°41'52"				37.509	71°41'52"				3
	4	80-0 3/4		11-0	15-0	28-0 3/4	1 3/4	10×3/4	10×3/4	10×3/4	12×3/4	12×1 1/2	12×1 7/8							1"	—	1 1/16"	—	39.200	71°41'52"				38.025	71°41'52"				4
	5	80-0 3/4		11-0	15-0	28-0 3/4	1 3/4	10×3/4	10×3/4	10×3/4	12×3/4	12×1 1/2	12×1 7/8	5×7/16						1"	—	1 1/16"	—	39.656	71°41'52"	E12		9 1/4"	38.476	71°41'52"	F12		9 1/4"	5
E20	6	80-0 3/4	48"×3/8	13-6	13-0	27-0 3/4	1 3/4	10×3/4	10×3/4	10×3/4	14×3/4	14×1 1/4	14×1 1/2	6×1/2	4×3/8	40@5"	23@8"	8@12"	4"	1 1/16"	—	1 1/16"	—	39.961	71°41'52"	E14	3	9"	38.792	71°41'52"	F14	3	9"	6

ROUTE NO.	SECTION	COUNTY	TOTAL SHEETS	SHEET NO.
F.A.I.—55	SW—1818.3—2H	COOK	99	68
FED. ROAD DIV. NO. 4	ILLINOIS	PROJECT I.G.—55—7(38)—289		

NOTES:

"†" Indicates stepped bottom flange at Rear Pier Bearings.

"φ" Indicates stepped bottom flange at Forward Pier Bearings.

"□" Set all bearing devices of a given span in the direction of the girder indicated. See Anchor Bolt Setting Diagrams, Sheets S8 through S29.

CITY OF CHICAGO
DEPARTMENT OF PUBLIC WORKS
BUREAU OF ENGINEERING

SOUTHWEST ROUTE SUPERHIGHWAY
ELEVATED HIGHWAY
S. LAKE PARK AVE. TO S. LAKE SHORE DRIVE
SECTION SW—1818.3—2H

GIRDER SCHEDULE — E-N ROADWAY

SCALE: AS NOTED DEC. 1964

SHEET NO. S-47 OF 99 SHEETS